STATE OF CALIFORNIA • DEPARTMENT OF TRANSPORTATION

TECHNICAL REPORT DOCUMENTATION PAGE

TR0003 (REV 10/98)

ADA Notice

For individuals with sensory disabilities, this document is available in alternate formats. For information call (916) 654-6410 or TDD (916) 654-3880 or write Records and Forms Management, 1120 N Street, MS-89, Sacramento, CA 95814.

1. REPORT NUMBER CA13-2062B	2. GOVERNMENT ASSOCIATION NUMBER	3. RECIPIENT'S CATALOG NUMBER
4. TITLE AND SUBTITLE Final Report for the Western Transportation Institute's augmented Speed Enforcement Project		5. REPORT DATE 6-06-2013 6. PERFORMING ORGANIZATION CODE
7. AUTHOR Larry Hayden, Doug Galarus, Prof. Nicholas Ward, Dr. Zhirui Ye		8. PERFORMING ORGANIZATION REPORT NO.
9. PERFORMING ORGANIZATION NAME AND ADDRESS Western Transportarion Institute College of Engineering Montana State University Bozeman, Montana		10. WORK UNIT NUMBER 11. CONTRACT OR GRANT NUMBER 65A0355
12. SPONSORING AGENCY AND ADDRESS California Department of Transportation Division of Research, Innovation and System Information (MS-83) P.O. Box 942873 Sacramento, CA 94273-0001		13. TYPE OF REPORT AND PERIOD COVERED Final Report - 12/2009 to 06/2013 14. SPONSORING AGENCY CODE

15. SUPPLEMENTARY NOTES

16. ABSTRACT

The purpose of the augmented Speed Enforcement (aSB) project was to detect and warn speeding vehicle in a work zone and provide wamings to work zone workers. The system developed by Montana Stare University consists of 28 orange traffic drums (called smart drums or sDrums) that were positioned adjacent to the orange cones marking the work zone lane closure. When the system detects a speeding vehicle approaching. it synchronously flashes the orange lights on top of the drums, warning the driver to slow down and the workers of a speeding vehicle. If the vehicle speed is above a set trigger speed, the system activates a pager system that warn the workers of the speeding vehicle. The system was deployed for four weeks near Los Banos, CA to evaluate its effectiveness and deployability. Evaluation of speed data appears to show that the system does have an impact in reducing overall average speed and percentage of vehicle traveling at high speeds. Deployment of the system was found to be labor intensive and time consuming since it needs to be deployed and retrieved every day. This document details the development of the WTI system only.

17. KEY WORDS aSE, sDrums, sCones	18. DISTRIBUTION STATEMENT No restrictions. This document is available to the public through the National Techmical Information Service, Springfield, VA 22161	
19. SECURITY CLASSIFICATION *(of this report)* Unclassified	20. NUMBER OF PAGES 118	21. COST OF REPORT CHARGED N/A

Reproduction of completed page authorized.

DISCLAIMER STATEMENT

This document is disseminated in the interest of information exchange. The contents of this report reflect the views of the authors who are responsible for the facts and accuracy of the data presented herein. The contents do not necessarily reflect the official views or policies of the State of California or the Federal Highway Administration. This publication does not constitute a standard, specification or regulation. This report does not constitute an endorsement by the California Department of Transportation (Caltrans) of any product described herein.

For individuals with sensory disabilities, this document is available in braille, large print, audiocassette, or compact disk. To obtain a copy of this document in one of these alternate formats, please contact: the California Department of Transportation, Division of Research Innovation, and Systems Information, MS-83, P.O. Box 942873, Sacramento, CA 94273-0001.

Final Report for the Western Transportation Institute augmented Speed Enforcement System

by

Larry Hayden
Research Associate II

Douglas Galarus
Program Manager
Systems Engineering Development and Integration Program

Professor Nicholas J. Ward
Co-Principal Investigator

Dr. Zhirui Ye
Co-Principal Investigator

Western Transportation Institute
College of Engineering
Montana State University

A report prepared for the

U.S. Department of Transportation
Research and Innovative Technology Administration

June 10, 2013

DISCLAIMER

The contents of this report reflect the views of the authors, who are responsible for the facts and the accuracy of the data herein. The contents do not necessarily reflect the official views or policies of California Department of Transportation, Montana State University or the Federal Highway Administration.

Alternative accessible formats of this document will be provided upon request. Persons with disabilities who need an alternative accessible format of this information, or who require some other reasonable accommodation to participate, should contact Carla Little, Western Transportation Institute, Montana State University, PO Box 174250, Bozeman, MT 59717-4250, telephone number 406-994-6431, e-mail: clittle@coe.montana.edu.

ACKNOWLEDGEMENTS

The authors thank the Federal Highway Administration and the California Department of Transportation for its financial support of this work. They also thank Randy Woolley and Ha Nguyen of Caltrans for their support and assistance. They also thank California PATH for their assistance with daily drum deployment and retrieval. They also thank Caltrans District 10 and the California Highway Patrol for their support in Los Banos.

TABLE OF CONTENTS

1. Introduction 15
2. System Development 16
2.1. Concept of Operations 16
2.2. System Requirements 17
- Speed Detection 17
- Vehicle Detection 17
- Communication System 18
- Warning Light 18
- Control System 18
- Pager Warning System 18
- Power System 18
- Enclosure 18
- Software 18

2.3. System Architecture 19
2.4. Prototype Development 20
2.5. Prototype Design 22
2.5.1. Component Selection 22
2.5.2. Assembly 31
2.5.3. Component Test Results 34
2.5.4. Software 46
2.6. Pilot Design 46
2.6.1. Components 47
2.6.2. Drum Assembly 56
2.6.3. sDrum Power Measurements 61
2.6.4. Administration Software Suite 65
3. System Deployment and Evaluation 72
3.1. Light Brightness 73
3.2. Temperatures Inside sDrum 74
3.3. Pager Evaluation 77
3.4. Quick Disconnect Design 78
3.5. Radar Range 79

3.6. Light Pattern Tests 82
3.6.1. Test Setups 82
3.6.2. Procedure 83
3.6.3. Results 84
3.6.4. Conclusion 89
3.7. Tire Ring 90
4. Conclusions 92
5. Recommendations 93
6. Appendix A 94
6.1. Prototype Frame Drawing 94
6.2. Tool Drawing 95
6.3. D-Sub Punch 95
7. Appendix B 96
7.1. Bill of Materials 96
7.2. Connector Diagrams 109
7.3. Drawings 113
8. References 117

LIST OF TABLES

Table 1: Speed Detection Options 20
Table 2: Presence Detection Options 21
Table 3: Wireless Communication Options 21
Table 4: Warning Light Options 21
Table 5: Battery Power Options 22
Table 6: Housing Options 22
Table 7: sCone Component List 31
Table 8: Initial Pager Range Results 40
Table 9: Ground Plane Test Results 42
Table 10: Pager Range Comparisons 44
Table 11: Pager Range Results 45
Table 12: Speed Log Example 71
Table 13: Light Switch BOM - Part 1 96
Table 14: Light Switch BOM - Part 2 97
Table 15: Master Drum BOM – Part 1 97
Table 16: Master Drum BOM - Part 2 98
Table 17: Master Drum BOM - Part 3 99
Table 18: Master Drum BOM - Part 4 100
Table 19: Master Drum BOM - Part 5 101
Table 20: Slave Drum BOM – Part 1 101
Table 21: Slave Drum BOM - Part 2 102
Table 22: Slave Drum BOM - Part 3 103
Table 23: Slave Drum BOM - Part 4 104
Table 24: Pager Drum BOM – Part 1 104
Table 25: Pager Drum BOM - Part 2 105
Table 26: Pager Drum BOM - Part 3 106
Table 27: Repeater Drum BOM – Part 1 107
Table 28: Repeater Drum BOM - Part 2 108
Table 29: Repeater Drum BOM - Part 3 109

LIST OF FIGURES

Figure 1: aSE System Diagram 15
Figure 2: sDrum System Architecture 19
Figure 3: Houston Radar Model SS300 Radar Module – WTI Photo 23
Figure 4: Houston Radar Configuration Screen 24
Figure 5: Moxa Model IA240-LX Industrial Computer – WTI Photo 24
Figure 6: Digi International XBee - Pro Radio – WTI Photo 25
Figure 7: Digi X-CTU Software Start Screen 26
Figure 8: Long Range Systems Pager – LRS & WTI Images 27
Figure 9: Whelen L22 Beacon – WTI Photo 28
Figure 10: Prototype Light Switch – WTI Photo 28
Figure 11: WTI Light Switch – WTI Photos 29
Figure 12: Werker 12Vdc AGM Battery – WTI Photo 30
Figure 13: SC-36 Traffic Cone - WTI Photo 30
Figure 14: Light Mounting Plate and Light Pipe – WTI Photo 31
Figure 15: sCone Aluminum Frames – WTI Photo 32
Figure 16: Master 1 sCone without Cone – WTI Photo 33
Figure 17: Assembled sCone – WTI Photo 34
Figure 18: Power Analyzer Pro – WTI Photo 34
Figure 19: Warning Light Power Testing – WTI Photo 35
Figure 20: Light Current Comparison 36
Figure 21: XBee Radio Antenna Patterns 37
Figure 22: Digi Adaptor Antennas – WTI Photo 38
Figure 23: RSSI Values for 10 feet Spacing 39
Figure 24: RSSI Values for 20 feet Spacing 39
Figure 25: Pager Range Test Fixture - WTI Photo 40
Figure 26: No Ground Plane – WTI Photo 41
Figure 27: Small Ground Plane - WTI Photo 41
Figure 28: Large Ground Plane - WTI Photo 41
Figure 29: Pager Test Site - Google Earth Image 42
Figure 30: Pager Range Test Fixture 44
Figure 31: Assembled Master Drum 47

Figure 32: TrafFix 1800 LDPE Drum – WTI Photo 48
Figure 33: TrafFix Standard Drum Base - WTI Photo 48
Figure 34: TrafFix Standard Drum Base with Tabs Removed - WTI Photo 49
Figure 35: Master sDrum with Tire Ring – WTI Photo 49
Figure 36: Warning Light Mounted on sDrum – WTI Photo 51
Figure 37: Master Drum Wiring Harness – WTI Photo 51
Figure 38: sDrum Charging – WTI Photo 52
Figure 39: Digi Radio with Mounting Plate – WTI Photo 53
Figure 40: Radar with Mounting Bracket – WTI Photo 53
Figure 41: Warning Light with Major Mounting Components – WTI Photo 54
Figure 42: Controller and Light Switch attached to Mounting Bracket – WTI Photo 54
Figure 43: Battery Tray and Strap – WTI Photo 55
Figure 44: Master/Logger sDrum Base Assembly – WTI Photo 55
Figure 45: Bottom of sDrum Base – WTI Photo 56
Figure 46: Assembled Master sDrum – WTI Photo 57
Figure 47: Assembled Slave Drum - WTI Photo 58
Figure 48: Assembled Pager Drum - WTI Photo 59
Figure 49: Assembled Repeater Drum – WTI Photo 60
Figure 50: Master Drum Current 62
Figure 51: Slave Drum Current 63
Figure 52: Pager Drum Current 64
Figure 53: Repeater Drum Current 65
Figure 54: aSE Management Opening Screen – WTI Image 66
Figure 55: XStick Connected – WTI Image 67
Figure 56: Connected to sDrum Screen – WTI Image 68
Figure 57: List Connected Cones Screen – WTI Image 69
Figure 58: sDrum System Deployment – Modified Caltrans Image 72
Figure 59: Warning Light Brightness – WTI Photo 74
Figure 60: Lascar Temperature Logger - WTI Photo 74
Figure 61: Temperature Logging – WTI Photo 75
Figure 62: Temperature Inside versus Outside the Drum 75
Figure 63: Temperature Rise inside the Drum 76
Figure 64: Temperature Rise inside Top of Drum 77

Figure 65: Frame Capture of Speeding Vehicle - WTI Image 78
Figure 66: Quick Disconnect System – WTI Photo 79
Figure 67: Radar Range Measurement Setup – Transcend 80
Figure 68: Radar Range Measurement Result 81
Figure 69: Radar Range Diagram 82
Figure 70: Laboratory Light Pattern Testing - WTI Photo 83
Figure 71: Outdoor Light Pattern Testing - WTI Photo 83
Figure 72: Laboratory Metronome Test Results 85
Figure 73: Outdoor Metronome Test Results 85
Figure 74: Laboratory Sequential Illumination Results 86
Figure 75: Outdoor Sequential Illumination Results 86
Figure 76: Laboratory Forward Triplets Results 87
Figure 77: Outdoor Forward Triplets Results 87
Figure 78: Laboratory Broadcast On/Off Results 88
Figure 79: Outdoor Broadcast On/Off Results 88
Figure 80: Tire Ring Weight 90
Figure 81: sCone Frame Drawing 94
Figure 82: D-Sub-9 Punch Locator Tool 95
Figure 83: DB9 D-Sub Punch - Image Courtesy of Challenge Tool 95
Figure 84: Master Drum Connector Diagram 109
Figure 85: Slave Drum Connector Diagram 110
Figure 86: Pager Drum Connector Diagram 111
Figure 87: Repeater Drum Connector Diagram 112
Figure 88: Master Drum Wiring Harness 113
Figure 89: Slave Drum Wiring Harness 114
Figure 90: Pager Drum Wiring Harness 115
Figure 91: Repeater Drum Wiring Harness 116

Revision History

Version	Description	Date
1.0	Draft	February, 2013
2.0	Revised draft with comments addressed.	June, 2013
3.0	Final version, unchanged from version 2.0 except for file name change.	Oct, 2013

EXECUTIVE SUMMARY

The purpose of this project, augmented Speed Enforcement (aSE), was to detect and warn speeding vehicles in a work zone as well as providing warnings to work zone workers. The project consisted of two systems, one provided by California PATH at UC Berkeley and the other developed by the Western Transportation Institute (WTI) of Montana State University. Either can be deployed independently or they can be deployed together.

The purpose of the WTI project was to design, assemble, and real world test a deployable smart drum system for rural area work zones. The original concept was to develop a warning system for work zones that would detect vehicle speeds and track a speeding vehicle using warning lights mounted on traffic cones. The warning lights would warn the work zone workers and the speeding driver. Due to the project schedule being compressed and the difficulty of the task, the tracking requirement was postponed; the warning lights were designed to simply flash synchronously upon detection of a speeding vehicle.

The prototype system consisted of off-the-shelf components except for the light switch and frame which were custom-developed by WTI for the project. Traffic cones provided a compact enclosure enabling use of a small deployment and storage truck, easing deployment. The resulting system was called the “smart cone system” which was used for development purposes.

The pilot system consisted of the components developed in the prototype system but the enclosure was changed to a drum to make it more crash worthy. The drum provided a large enclosure enabling easy access to the interior thus eliminating the need for a frame. The resulting system was called the “smart drum system” (sDrum) and 30+ units were constructed for deployment.

With the assistance of the California Department of Transportation (Caltrans), the pilot system was deployed for four weeks near Los Banos, CA to evaluate the effectiveness and deployability of the sDrum system. Effectiveness will be evaluated by an independent contractor.

Deployment of the system was found to be labor intensive and time consuming since it needs to be deployed and retrieved every day and tire rings are needed to prevent the drums from moving out of position on a windy day. It took two or more people; one to drive the truck and at least one, preferably two, to deploy or retrieve the drums.

During the Los Banos deployment it was observed that there was noticeable variation in the distance of the speeding vehicle from the drums when the warning lights started flashing. Subsequent testing at the WTI Transcend laboratory was conducted to measure the distance variability in a controlled environment. Also, the question had arisen whether the drums would work at 100 feet spacing instead of the 50 feet spacing used during development and deployment so that was also tested at Transcend.

Ultimately it was determined that much of the observed distance variability could be attributed to the varied shapes of the vehicles and the built-in processing characteristics of the radar unit. The spacing test showed the radios were capable of reliable communication at 100 feet but further testing would be needed before committing to it for deployment.

This project demonstrated that a system of smart drums could be developed to meet the stated requirements. It also demonstrated that the system must be simpler to deploy for work zone personnel to embrace it.

Future research should consider minimum drums sets to reduce deployment efforts and evaluate optimal flashing light patterns and strategies.

1. INTRODUCTION

Speeding is a primary factor contributing to major injury and fatality crashes in rural area highway work zones. Automated Speed Enforcement (ASE) detects speed violators and automatically processes speeding citations, but there can be legal barriers for some jurisdictions to implement ASE. Augmented Speed Enforcement (aSE) which is based on similar technologies utilizes the information about detected violators to notify an onsite California Highway Patrol (CHP) officer to manually identify and stop the speeder. The development of aSE was conducted with funding from the Research and Innovative Technology Administration (RITA) in the United States Department of Transportation. The systems will be evaluated by an independent party that will analyze the data and publish a report for RITA in addition to the reports generated by the researchers.

As shown in Figure 1, the aSE system consists of two systems developed by two research teams with both systems operating in the same work zone. One system developed by California PATH at UC Berkeley has a camera with built in radar to detect and photograph the license plates of speeding vehicles. Upon detecting a speeding vehicle the vehicle's license number and speed are recorded and displayed on a changeable message sign. The same data is transmitted to a CHP Officer located in the work zone. The CHP Officer will use his radar system to verify the vehicle speed and determine whether or not to issue a citation.

The second system was developed by the Western Transportation Institute (WTI) of Montana State University. It consists of 28 orange traffic drums that are positioned adjacent to the orange cones marking the work zone lane closure. When the system detects a speeding vehicle approaching, it flashes the orange lights on top of the drums, warning the driver to slow down and the workers of a speeding vehicle. Also, if the vehicle speed is above a pager set speed, the system triggers a pager system that provides additional warning to the workers of the speeding vehicle. The WTI system was dubbed the smart drum (sDrum) system.

This document details the development of the WTI system only.

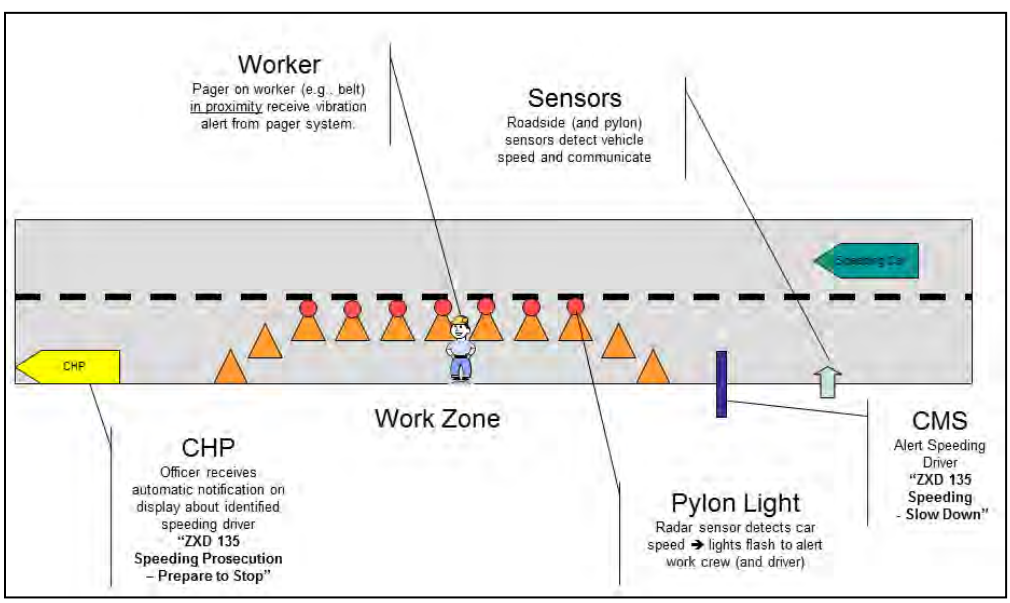

Figure 1: aSE System Diagram

2. SYSTEM DEVELOPMENT

2.1. Concept of Operations

This concept of operations summary shows how the aSE system shall work from the stakeholders perspective. The stakeholders for aSE are DOT management, law enforcement, work zone workers, and vehicle operators. These stakeholders will have the following general concerns:

- DOT management's concerns would be that the system be affordable, easy to deploy and maintain, and have a coordinated storage and deployment vehicle.
- Law enforcement's view would be that the system be reliable, accurate, and consistent.
- Work zone worker's perspective would be that the system be easily understood, non-intrusive, accurate, consistent, reliable and easy to deploy and maintain.
- Vehicle operator's viewpoint would be that the system be accurate, consistent and easily understood.

The aSE system shall consist of two independent components to be developed by WTI and PATH. PATH will develop a portable video-based system that detects speeding vehicles, records violators' license plate number and speed, displays the license plate number and speed on a changeable message sign, and stores the data in a DOT database. WTI shall develop a networked drum system that will detect speeding vehicles and warn motorists, roadside workers, and law enforcement.

The WTI system shall be comprised of traffic drums with vehicle and speed detecting sensors, and an externally mounted beacon for visually warning drivers and workers of speed violations. A secondary system will notify workers and law enforcement personnel of extreme speed violators.

The WTI system shall address managements concern of affordability by using predominantly off-the-shelf high quality moderately priced products. Deployment will be simplified by keeping the weight moderate, employing a low center-of-gravity and providing handholds for moving. The system will use Department of Transportation approved materials where applicable and be certifiably crash-worthy. The system will be easy to maintain using rugged materials, water resistant connectors and hardened components. Lastly, the WTI system shall utilize the same vehicle or trailer for storage and deployment.

Law enforcement's concern for reliability will be addressed by designing a robust system, with well-understood, mature technologies. The accuracy and consistency of the system will be assured through the use of high quality components.

Work zone workers need a system that is easy to understand which will be addressed through the use of flashing lights and a secondary pager system. The pager will be compact enough to fit in a pocket or clipped to a belt.

The WTI system will give vehicle operators an intuitive warning that their speed is excessive through externally mounted beacons.

A separate concept of operations document was written early in the project, and most of its information is included and revised in this report.

2.2. System Requirements

The following system requirements come from the project proposal and in a few instances were later modified from discussion with Caltrans and FHWA.

The goal of this system is to modify driver behavior and improve traffic safety within the work zone area. To achieve this goal, the system should have the following major functions:

- The system shall measure vehicle speeds.
- The system shall identify speed violations within a traffic stream.
- As a speeding vehicle is detected and is reaching the smart drums, the system shall trigger beacons on the top of the drums to warn the motorist and workers.
- The system shall send a message to pager devices to warn roadside workers when a speeding violation is detected.[1]
- The system shall archive vehicle speed warning data for system performance evaluation.

2.3. Preferred Functionality

Components of the Smart Drum (sDrum) system were determined to be speed detection, vehicle detection, communication system, warning light, controller, pager, and battery. Common properties of sDrum components would be low power, small size, low weight, computer interface and designed for outdoor use. Low power minimizes battery size and recharge frequency. Small size and low weight enables use of a smaller enclosure and makes transportation and deployment easier. Components designed for outdoor use increase system reliability and a computer interface is necessary for system integration.

- **Speed Detection**

To support enforcement it is assumed the speed detection component should be accurate within 1 MPH, although a less accurate device would be less costly and might suffice for warnings.

- **Vehicle Detection**

The vehicle detection component should accurately detect a vehicle and optionally distinguish vehicle type. Driver response to the drums may be different for various vehicle types which would be useful information to improve the system.

In-roadway sensor technologies include pneumatic road tubes, inductive loops, magnetic sensors, piezoelectric sensors. Over-roadway sensor technologies include video image processor, microwave radar, passive and active infrared sensors, ultrasonic sensors and passive acoustic array sensors.

[1] The speed to trigger the pager devices may be different from that to trigger the lights in order to avoid perceived nuisance alarms by work zone workers.

In-roadway sensors are not likely to function properly when installed in a drum. Commercial over-roadway sensors would require a mobile mast for installation, complicating system deployment.

- **Communication System**

The communication system having mesh network capability would simplify deployment since most drums would not require a specific network location. Specific drum locations are only required for the master drums. A mesh network automatically reforms itself, if possible, when a communication node fails. This may minimize the need for immediate repairs thus improving worker safety. Other useful communication system features would be simple configuration, individual node addressability, and two-way communication support.

- **Warning Light**

The drum's warning light should be bright enough for daytime visibility and dimmable for nighttime use. The MUTCD (Manual on Uniform Traffic Control Devices) suggest a Type B warning light for such an application (*1*). The typical Type B warning light does not have 360 degree visibility so a Class II warning light will be used for visibility to both drivers and workers (*2*).

- **Control System**

The micro controller should meet the following criteria: small size, standard multiple sensor connectivity, battery powered, Linux operating system, and external data storage for logging.

- **Pager Warning System**

The pager system base station unit should be battery powered, have a minimum 500 foot range, and be programmable.

- **Power System**

Battery technology, voltage, capacity, size, weight, cost and ease of recharging will be evaluated. It is expected the largest standard battery size that fits in the drums should be used. Chargers will be researched in conjunction with the battery technology to assure compatibility.

- **Enclosure**

The enclosure includes the drum (or barrel) and component frame. The component frame fits inside the drum to hold the components, including the speed detector, mesh radio, pager radio, warning light, controller, and battery. The frame requires a custom design made of aluminum to minimize weight.

- **Software**

The system requires two types of software; control software that operates the system and runs locally on the controller, and management software for system configuration and testing that runs remotely on a laptop/desktop computer.

The control software must communicate with the radio and pager system, switch the lights, create log files for speed, warning lights, and pages, and for troubleshooting.

The management software should run on a Windows laptop to provide communication with the controller for configuration of the controller and other configurable components.

2.4. System Architecture

The sDrum system architecture is shown in Figure 2. The master drum is the control center of the system and receives vehicle speeds from its internal radar and flashes the lights and triggers the pagers depending on the vehicles speed and the controller's configuration. The master drum communicates with slave, logger, and pager drums through a ZigBee mesh radio network. Logger drums solely log vehicle speeds although they contain the same components as the master drum. The repeater drum repeats transmissions received from the pager transmitter, extending the range of the pager system.

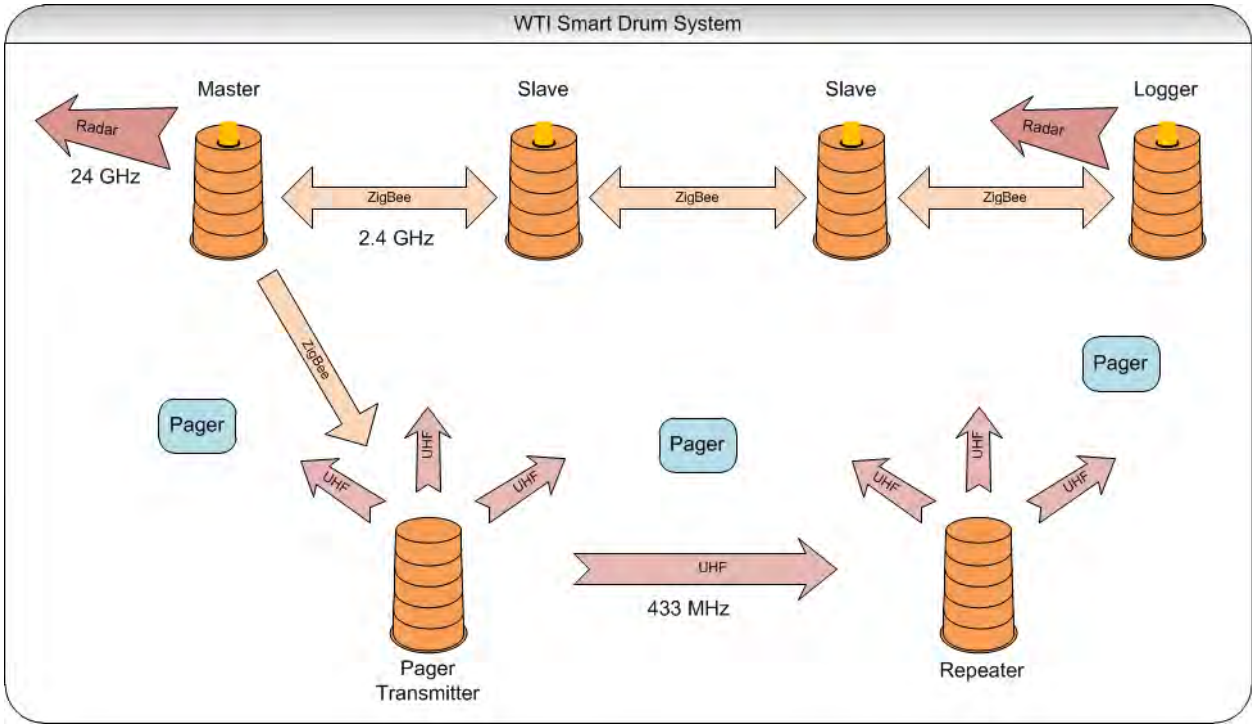

Figure 2: sDrum System Architecture

The full sDrum system includes one master, 24 slaves, three loggers, one pager and one repeater drum. The master is at the beginning of the line and a logger is at the end of the line. The other two logger drums are equally spaced between the master and the last logger drum. Eight slaves are deployed between the master and logger drums and between the other logger drums. The pager and repeater drums are deployed on the shoulder of the roadway, positioned to provide the best work zone coverage. More repeater drums may be added to extend the pager's coverage if necessary.

2.5. Prototype Development

As the first stage of the design process, a prototype was developed to explore and verify the methods of assembly and the performance of the components. For the initial prototype design, the component enclosure was a standard traffic cone. For the initial system design cone spacing was 10 feet to enable three lights to track individual speeding vehicles. Precise and continuous tracking of individual vehicles was determined to not be technically feasible within the project timeline prior to deployment and testing. Moreover, it was recognized that there may be an advantage to flashing all lights at the same time as it increased awareness of all drivers and also increased the conspicuity of the alert to workers (and officers) in the work zone that a speeding vehicle was present in the traffic stream. Thus, the prototype was developed with a strategy of flashing all lights (synchronized) when any speeding vehicle was detected. The issue of technically feasible lighting patterns was then revisited after the deployment phase of the project (see Section 3.6).

Many technologies were considered for speed detection, presence detection, communication, warning light, power, and housing. Also, options for installing the components inside a traffic cone were explored. Although presence detection was not implemented, it is included here for completeness.

Table 1: Speed Detection Options

Parameter/ Technology	**Range** (feet)	**Accuracy** (MPH)	**Interference Potential**	**Cost**	**Other Issues**
Radar	300(*3*)	+/- 0.5%(*4*)	low(*5*)	moderate	
Lidar(*6*)	2500	+/- 1	low	high	may need aperture in cone
Video	NA	+/- 1(*7*)	moderate(*8*)	moderate	mast and lighting complicates deployment
Road Tubes	NA	highly dependent on deployment precision	low	low	

Table 2: Presence Detection Options

Parameter/ Technology	**Range** (feet)	**Presence Accuracy**	**Size**	**Comments**
Infrared – Passive	165(*9*)	depends on design	small	motion detector
Infrared - Active	100(*10*)	high	small	laser radar sensor
Ultrasonic	< 33(*11*)	high	small	window required
Capacitive	< 3(*12*)	high(*13*)	small	dielectric constant affects range
Inductive	inches	high	large	senses metals
Acoustic	20- 35(*14*)	high	med to large	

Table 3: Wireless Communication Options

Parameter/ Technology	**Range** (feet)	**Power**	**Data Rate**	**Comments**
WiFi	< 300*(15)*	high*(16)*	1-600 Mbps*(17)*	data rate dependent upon 802.11 standard used
WiMAX	> 3283*(18)*	low*(19)*	30-40 Mbps*(20)*	
XBee	< 300*(21)*	very low*(22)*	250 Kbps*(23)*	proprietary mesh characteristics
Cellular	> 3283*(24)*	high*(14)*	9.6-130 Kbps*(25)*	data rate dependent upon cellular standard used
DSRC*(26)*	< 3283	low	6-27 Mbps	requires FCC license

Table 4: Warning Light Options

Parameter/ Technology	**Brightness** (lm/W)*(27)*	**Power** (mA)	**Flash Rate***(28)*	**Comments**
Strobe	30 - 60	150*(29)*	< 2-3 Hz	slower flash rate
LED	90 - 130	650*(30)*	< 4 Hz	
Incandescent	12 - 20	180*(31)*	< 4 Hz	short bulb life

Table 5: Battery Power Options

Parameter/ Technology	Size (in^3 for 26 Ah)	Power Density (Ah/in^3)	Weight (lb.)	Comments
Lead Acid – Flooded*(32)*	283	0.09	18.1	not DOT approved
Lead Acid – AGM*(33)*	223	0.11	17.0	DOT approved
NiMH*(34)*	126	0.20	11.0	expensive
Li-Ion*(35)*	128 (for 23 Ah)	0.18	3.4	requires special charger

Table 6: Housing Options

Parameter/ Technology	Size*(36)*	Material	Color*(36)*	Weight*(37)*	Comments
Cone	28 in. height, min.	PVC	Orange	10-12 lb. without ballast	internal frame required
Drum	36 in. height, min	LDPE or HDPE	Orange	55 lb. max	LDPE - Caltrans requirement

Without the tracking requirement, the prototype design evolved into three types of cones; master, logger and slave. The master cone had a controller, radar sensor, radio, light, light switch, pager transmitter and battery. The logger cones had everything but the pager transmitter. There was one master cone and three logger cones in the full system. The remaining cones were referred to as "slave cones" which only had a radio, light, light switch, and battery.

All cones followed a similar design to the master cone, but with a subset of the components.

2.6. Prototype Design

In the prototype design phase, the project team identified components for the system, assembled the components into a system and tested the system. Building prototypes enables the designer to catch mechanical issues, identify component incompatibilities, verify the system meets requirements and if necessary, modify the design to meet the requirements for a usable product.

2.6.1. Component Selection

Each system requirement may require a specific component or technology. From the previous section the following technologies/components were selected for the prototype design.

2.6.1.1. Radar

The Houston Radar model SS300 radar module is shown in Figure 3. Its key specifications are +/-1 MPH accuracy, 300 foot range, 2 ounce weight, sealed for outdoor use, RS-232 serial communication and 12V dc powered. It was designed for use in cost sensitive radar speed signs, so its cost was moderate.

Figure 3: Houston Radar Model SS300 Radar Module – WTI Photo

The radar's sealed design, 1 MPH accuracy and RS-232 serial communication are key attributes for this application. The 38 degree azimuth (horizontal) beam angle is much wider than the standard radar guns 12 degree beam angle which makes identifying individual vehicle speeds more challenging when vehicles are closely spaced. However it provides more tolerance when aiming the radar.

The radar is configured with Houston Radar Configuration Tool software. The configuration screen is shown in Figure 4. Only sensitivity (ST) and serial port configuration (RS) were changed from default values to work better with the WTI system. An ST setting of 30% worked best for testing on 11th Street near WTI with a 25 MPH posted speed limit, but it was changed back to maximum (99) when deployed in California where the posted speed limit was 55 MPH. RS was changed to set the serial port baud rate to 9600 and output speed format to +xxx or ?000 when nothing was detected.

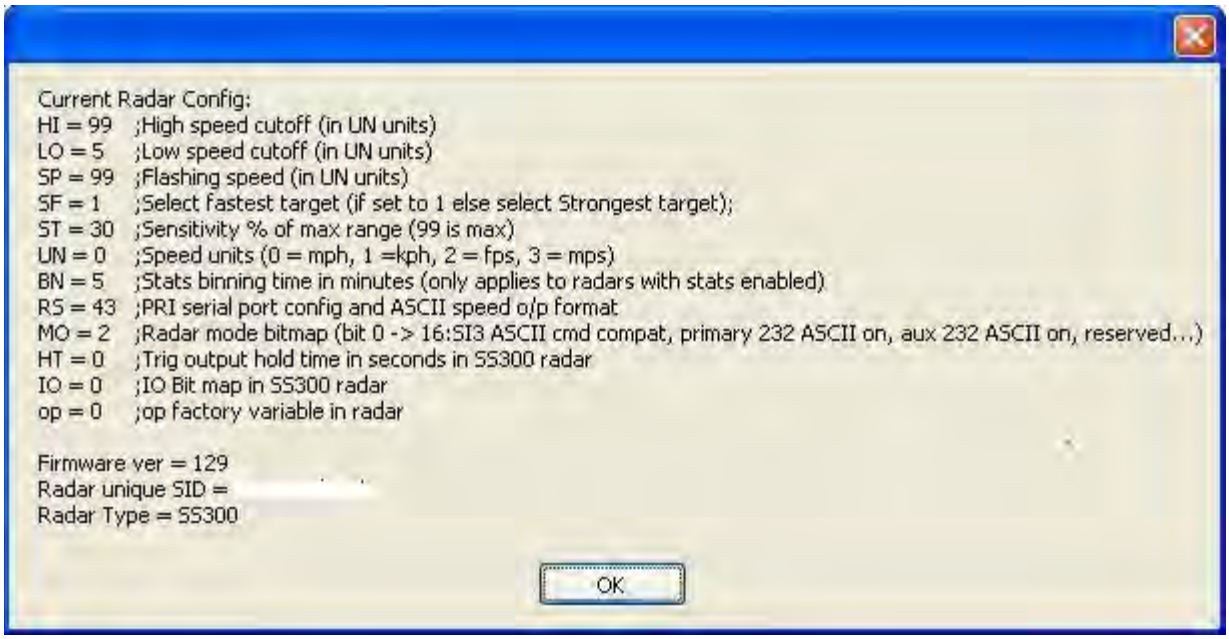

Figure 4: Houston Radar Configuration Screen

A custom serial interface cable or the interface module accessory is required for configuration. Note RS has many more options than what's listed in the manual; a spreadsheet listing all the RS options may be obtained from the manufacturer.

2.6.1.2. Controller

The Moxa IA240-LX controller is shown in Figure 5. The key requirements were a Linux operating system, four RS-232 serial ports, wide temperature range, small size, low power, powered by 12V dc and external storage. Cost is also moderate.

Figure 5: Moxa Model IA240-LX Industrial Computer – WTI Photo

Four RS-232 serial ports were required to connect the radar, radio, light switch and configuration radio. Since WTI programmers were familiar with the Linux OS it was the best choice for a compressed schedule.

The controller is accessed through the serial console port or thru a LAN port.

2.6.1.3. Radio

The Digi International XBee-Pro radio shown in Figure 6 is small, lightweight, and inexpensive. Other key specifications are RS-232 serial communication, low power consumption, 12V dc powered, mesh protocol capable, short range, and a wide operating temperature range.

Figure 6: Digi International XBee - Pro Radio – WTI Photo

The RS-232 serial communication provides a common computer interface. Since 10 foot cone spacing had been initially specified a short range radio would minimize interference issues and power consumption.

Mesh radios were desirable for their self-forming and self-healing ability. If a cone failed or was replaced it would not require the system to be manually reconfigured; the system would heal itself.

The radio is configured with a 9-pin serial cable and the manufacturer's X-CTU software. A screen shot of the software is shown in Figure 7.

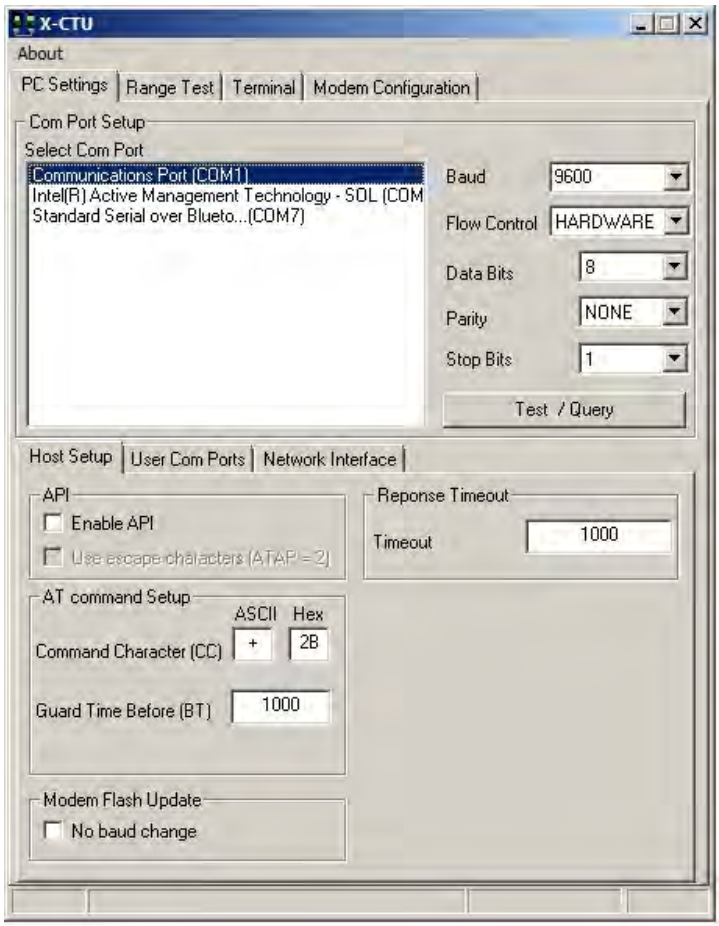

Figure 7: Digi X-CTU Software Start Screen

Note the XBee Pro radio was the first component selected, so when wider cone spacing was considered the XBee radio's performance was a primary concern. At that point testing had been limited to 25 feet spacing maximum and too much time and effort had gone into software development to consider changing radios.

Preliminary range testing at 50 foot spacing indicated that radio performance was satisfactory, though further testing should focus on determining the maximum reliable range.

2.6.1.4. Pager System

The Long Range Systems (LRS) Pager System is shown in Figure 8. The transmitter has a RS-232 serial communication and the pager is a simple non-alpha numeric pager with a strong vibration alert. It was reasoned an audio alert in a noisy construction environment would be ineffective so a strong vibration alert was a priority for the pager.

The LRS pager system is typically used in the restaurant industry and was chosen for the WTI system as a reasonable option for the prototype and pilot designs.

Figure 8: Long Range Systems Pager – LRS & WTI Images

The pager transmitter required a 10V ac power supply and LRS included a 110V ac to 10V ac power supply with the unit. To avoid several voltage conversions, a 12V dc to 10V ac inverter manufacturer was researched. That being unsuccessful and with the tight schedule not allowing enough time for a custom design, a standard 12 V dc to 110 V ac inverter was used with the LRS power supply.

Much later in the pilot design a backup transmitter was purchased that came with a 12V dc power supply, although the transmitter was still labeled as 10V ac input. After exchanging several emails with LRS it was learned that all of the transmitters could accept 12V dc directly. This saved approximately 290 mA of current drain thus extending battery run time by several days.

Four parameters: restaurant ID, repeat delay, power setting and frequency, can be set through the 9-pin serial port with a terminal emulator. None of the default parameters were changed in the WTI system.

Note the pagers do not have an on/off switch; they are "on" when taken out of the charger so the pagers must be stored in the charger to avoid dead batteries. When not being utilized and out of the charger the pagers remain operational for approximately one day. The state of battery charge cannot be checked externally but they blink all four lights when about to die. The batteries are not user replaceable.

2.6.1.5. Warning Light

The Whelen L22 Beacon shown in Figure 9 is Class II daylight visible with low power consumption. Other key characteristics are moisture resistant electronics, 360 degree visibility, and 12V dc powered.

Figure 9: Whelen L22 Beacon – WTI Photo

Many flashing patterns were evaluated; a consistent 1 Hz on and off flashing pattern was chosen for effectiveness and programming simplicity and over concern that other patterns would not execute reliably.

Although the L22 beacon draws about 300 mA when illuminated continuously it draws nearly 800 mA peak at power up. Since the light's power is switched on-and-off to flash, the average current was high, even at the 1 Hz flashing rate.

While experimenting with reducing the input voltage to dim the light, it was discovered that the input voltage could be reduced to the point the light "appeared" off yet the internal electronics were still powered. Further testing showed the internal electronics powering up caused most of the turn-on current spike so flashing the light from full voltage to a low voltage reduced the peak current to around 300mA from 800 mA. This substantially reduced flashing power consumption thus increasing run time. The cost was a few mA current draw when the light was "off" which was deemed acceptable.

2.6.1.6. Light Switch

To simultaneously flash all of the cone lights, it was determined that synchronously switching the light's power on and off would be the simplest solution. One of the first prototype switches is shown in Figure 10. It used a reed relay and fit inside the cone's light mounting pipe.

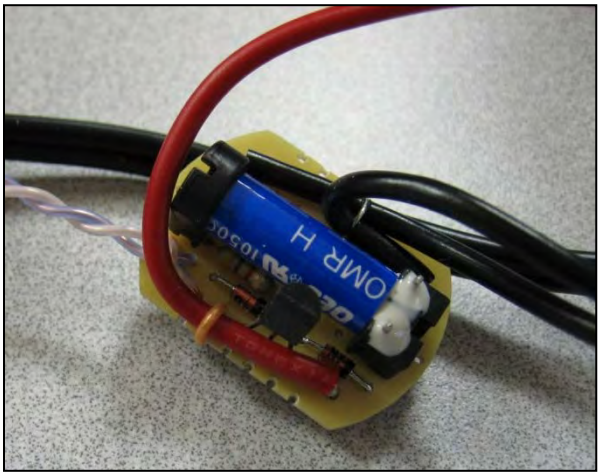

Figure 10: Prototype Light Switch – WTI Photo

After moving the switch to the frame for ease of assembly and not finding any commercial switches, WTI designed and built the switch shown in Figure 11.

The light switch is a simple thru-hole diode and MOSFET design on a custom designed printed circuit board (PCB) that fits in a standard Hammond extruded housing. Shelf mountable "L" bracket end panels were added for mounting.

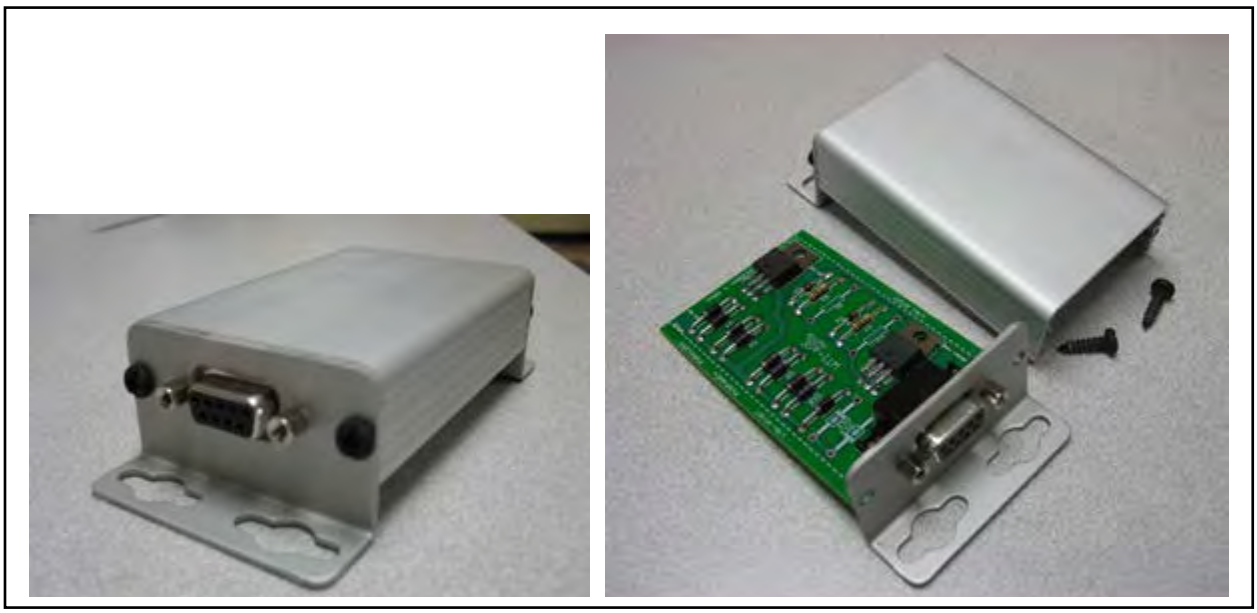

Figure 11: WTI Light Switch – WTI Photos

The end panels required a punch to install the D-Sub connector. The punch is shown in Figure 83 Appendix A. WTI also designed and fabricated a tool for drilling the three holes required to use the punch. A drawing of the drilling tool is also included in Appendix A.

2.6.1.7. Battery

A Werker WKA12-26NB absorbed glass mat (AGM) battery was selected as the power source. Shown in Figure 12, it is the lowest-profile large AGM battery that fits inside the 36" traffic cone. It has a capacity of 26 amp-hours (Ah) of current at 12V dc nominal.

Figure 12: Werker 12V dc AGM Battery – WTI Photo

The Werker battery is a valve regulated AGM battery which meets Caltrans MUTCU requirements. The battery weighs approximately 20 pounds.

2.6.1.8. Housing

An SC-36 traffic cone shown in Figure 13 was selected for the housing. It was thought a light on top of a traffic cone would be more noticeable than a light on top of a drum. It was available locally which helped the tight schedule. The 36 inch height would provide enough room for a large battery and increase radar and radio range by getting them farther above the ground.

Figure 13: SC-36 Traffic Cone - WTI Photo

The previously described smart cone (sCone) components are listed in the following table along with the manufacture's or vendor's name and part number.

Table 7: sCone Component List

Item	Manufacturer/Vendor	Part Number
Speed Detector	Houston Radar	SS300 - weather proof
Controllers	Moxa Americas Inc.	IA240-LX
Communication	Digi International	XA-M14-CS2P
Warning Light	Whelen Engineering Co.	L22HAP
Battery	Werker	WKA12-26AH
Pager	Long Range Systems	T74C232/Service Pager
Cone	Kenyon Noble Lumber	SC-36
Light Switch	WTI	---
Cone Frame	WTI	---
Wiring Harness	WTI	---

2.6.2. Assembly

Due to the cone's small diameter and wall flexibility a frame is required for installation of the components. The frame was designed by WTI to be both light weight and sturdy since the cone would most likely be moved by grabbing the cone just under the light. Although the light base has 1 inch DIA integral pipe threads the consensus was that the light threads would not survive the expected rough handling in use; as a result the light was attached to an aluminum plate. See Figure 14. Note the plate was oversized to help protect the light from breakage when the cone was tipped over.

Figure 14: Light Mounting Plate and Light Pipe – WTI Photo

The plate screwed onto the light mounting pipe or light pipe also shown in Figure 14 which in turn screwed into the frame. See Figure 15. The large washer is welded to the light pipe to hold the cone in position.

Figure 15: sCone Aluminum Frames – WTI Photo

Figure 16 shows Master 1 fully assembled but without the cone. Note the cutouts in the base plate fit the contours of the cone base.

Figure 16: Master 1 sCone without Cone – WTI Photo

The cone is installed by placing it over an assembled frame, pulling the light connector through the top hole and then threading the light connector through the light pipe. The light pipe can then be screwed into the frame, securing the cone. Finally the light connector is plugged into the wiring harness and the light screwed onto the pipe to finish assembly. An assembled cone is shown in Figure 17. The cones appear identical so a label was attached to the light for identification.

Figure 17: Assembled sCone – WTI Photo

2.6.3. Component Test Results

The test results in this section are for components that were utilized in the deployed system.

2.6.3.1. Power Measurement

Component power consumption was measured with a Medusa Research Inc. Power Analyzer Pro test module shown in Figure 18. Medusa Research's ProView software and a USB cable were used to log voltage and current to a laptop file.

Figure 18: Power Analyzer Pro – WTI Photo

The controller and radar power usage was steady over time but the light's power consumption varies considerably. Power measurements show the controller draws 0.07 amps at 12.6 volts while the radar draws 0.008 amps at 12.7 volts.

The warning light on bright draws approximately 300 mA when illuminated, see Figure 19, but pulls nearly 800 mA when power is first applied.

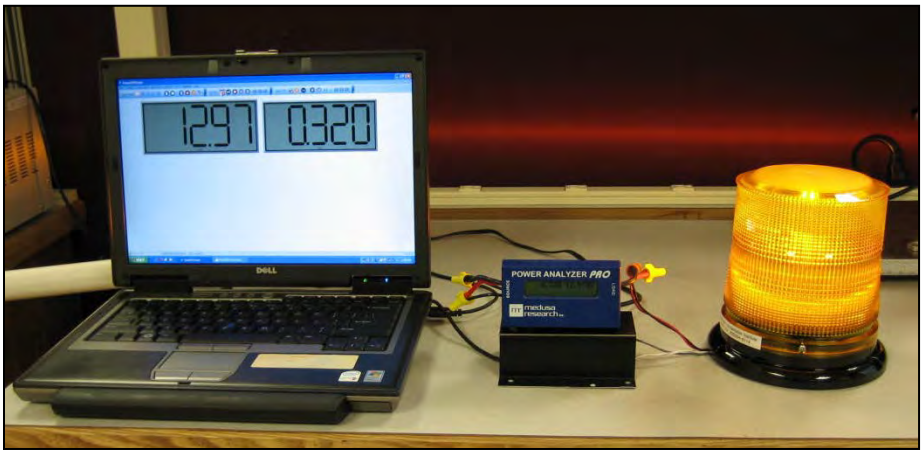

Figure 19: Warning Light Power Testing – WTI Photo

Figure 20 shows the light's peak current difference between switching with the light switch and switching it by disconnecting the battery. From 75 to approximately 165 seconds the light is set to dim; at that point it is switched to bright. The light is controlled by the light switch from 75 to 105 seconds; then from 105 to 165 seconds it is controlled by disconnecting and reconnecting the battery.

At 165 seconds the light is again controlled by the light switch from 165 to 200 seconds, from 200 to 270 it is controlled by disconnecting and reconnecting the battery. The graph illustrates the high peak currents avoided by utilizing the light switch, thus minimizing battery drain and improving system run time.

Note the resolution of the power analyzer is 10 mA which causes the small ripple in the graph. Although difficult to see, the light is drawing about 6 mA (quiescent current) when switched "off", which is near the analyzers decision point so occasionally the analyzer records 0 and other times 10 mA.

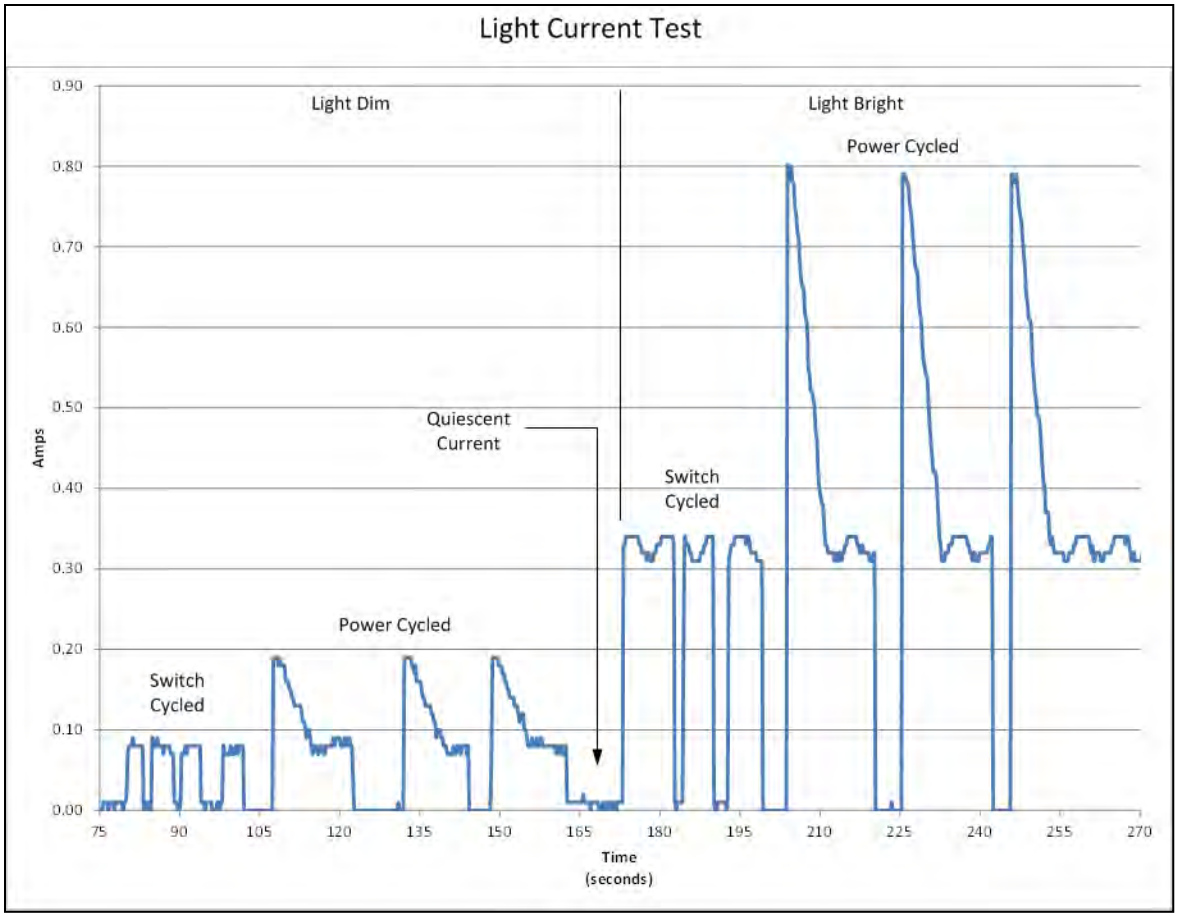

Figure 20: Light Current Comparison

2.6.3.2. Radio Antenna Pattern

To better understand the performance characteristics of the Digi XBee radios a basic antenna pattern measurement was performed. The radio was placed on the end of a PVC pipe at the same height and orientation as a cone installation. Received signal strength indicator (RSSI) of the radio was measured with another Digi XBee radio placed 50 feet way. The radio under test was rotated in 22.5 degree increments with RSSI measured five times at each angle and the five values averaged.

Note a Digi mesh radio network can return the received signal strength (RSSI) of the last hop to the target radio in dBm (dB relative to 1 milliwatt). RSSI is not a standard.

A plot of three different radio patterns is shown in Figure 21. Note the nulls at approximately 20 degrees and 202 degrees.

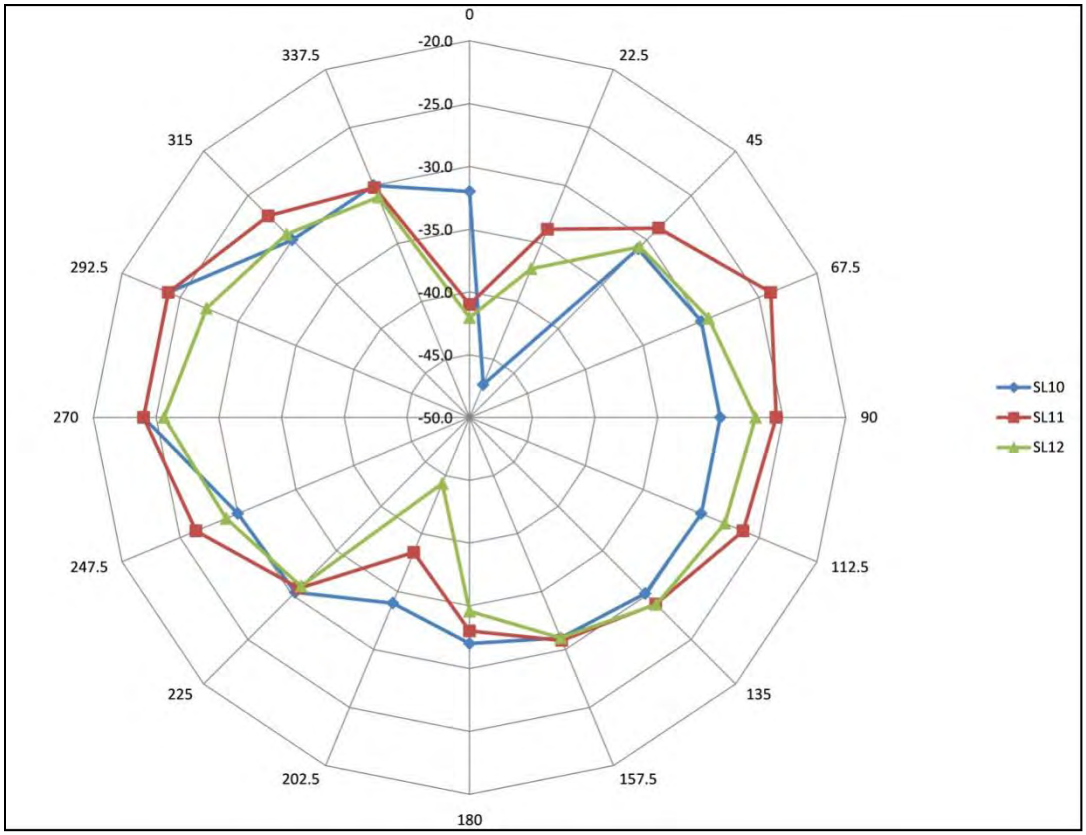

Figure 21: XBee Radio Antenna Patterns

The nulls may be caused by the antenna's orientation in the radio. See Figure 22. The radio antennas are the short black tipped wire near the bottom of the blue circuit board (XBee module). The wire is bent at approximately 90 degrees, so the cover can be installed, and pushed down and/or to the left to avoid the foam block in the cover, which can be seen directly above the radios. The ground plane on the back of the printed circuit board along with the antenna bending possibly causes the pattern nulls.

Note that when the radios were tested inside cones, the nulls where much shallower or not present.

Figure 22: Digi Adaptor Antennas – WTI Photo

2.6.3.3. Radio Range

Radio range was evaluated at 10 and 20 feet cone spacing by recording the received signal strength indication (RSSI) value measured by the radio in master 1 (M1).

Only M1 and the cone to be measured were powered up. The List all Cones routine ran three times, if three RSSI values were received that cone was turned off and the next cone turned on; the procedure repeated. This continued for all 27 cones. If three RSSI values were not received, List all Cones was repeated until three values were received.

For the ten feet spacing, more than half of the radios required one to four retries before responding the first time; the farthest radio required eight tries before responding. Interestingly, no radio failed to respond after responding the first time. Figure 23 shows the results for the 10 feet spacing measurements.

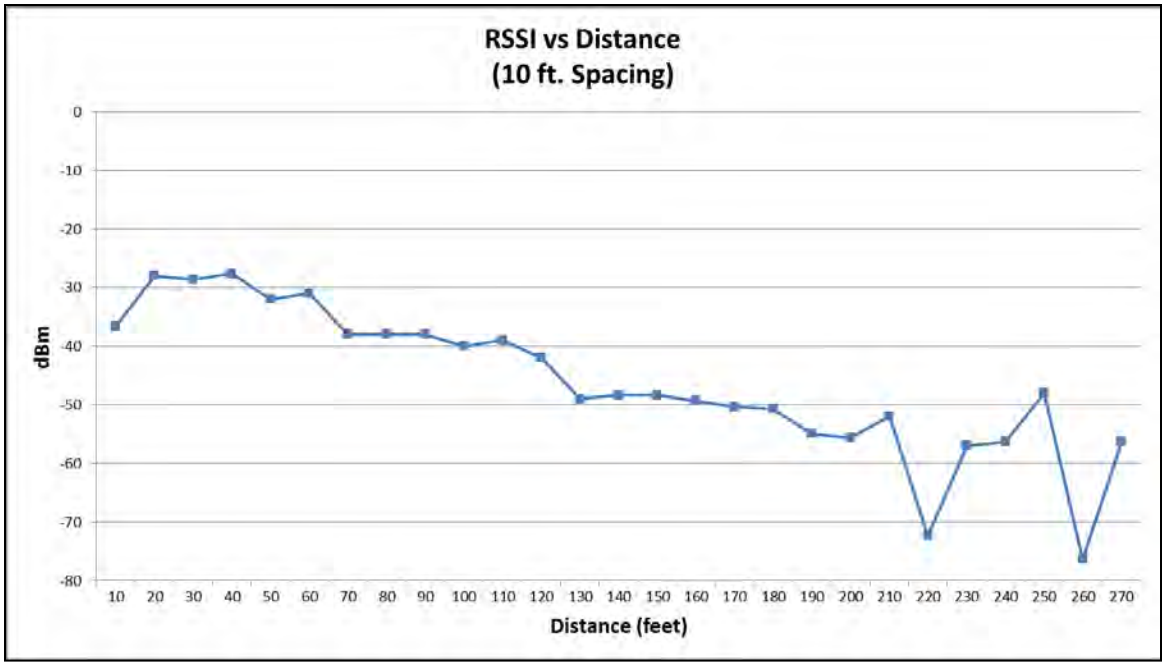

Figure 23: RSSI Values for 10 feet Spacing

Note the values decrease consistently up to 200 feet then become erratic indicating the limit of the useful range. The 200 feet limit repeated for 20 feet spacing although the radios abruptly quit communicating at 200 feet with only four of the remaining 17 radios responding at longer distances. See Figure 24. The random responses at longer distances were omitted for clarity.

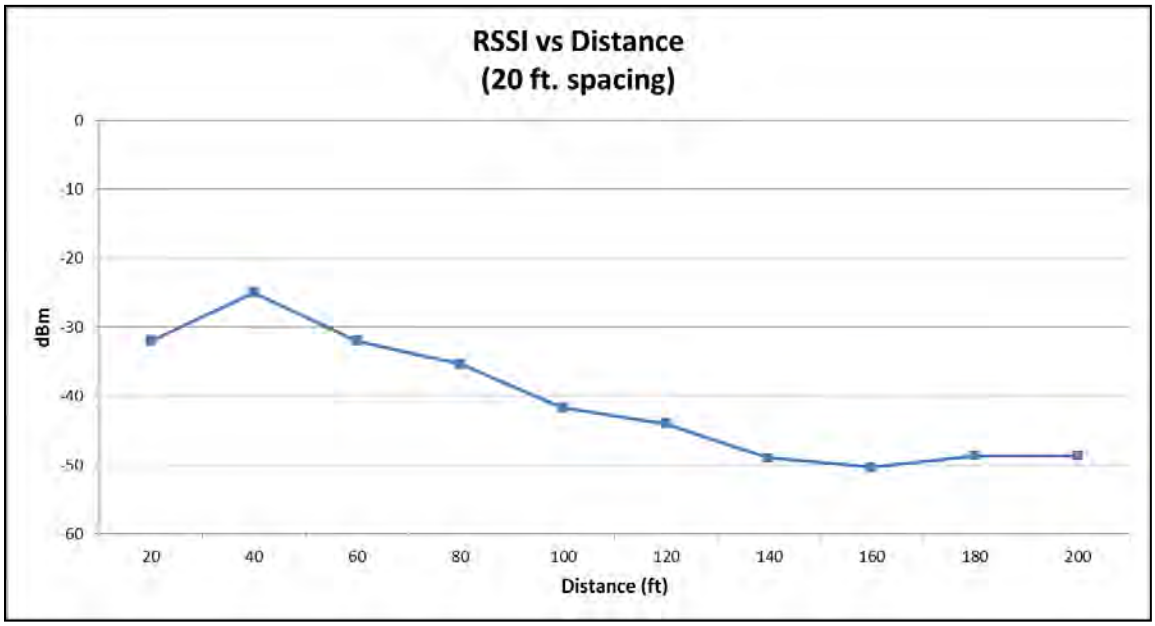

Figure 24: RSSI Values for 20 feet Spacing

The tests were not a definitive measurement of the Digi's adaptor's communication range, which would entail measuring the same radio at each distance, but it did provide an indication of the radio's average range.

2.6.3.4. Pager Range

The LRS pager system was tested using a hand truck test fixture and a laptop computer. The pagers were clipped to cardboard strips attached to the hand truck to keep the pagers consistently oriented. See Figure 25. The hand truck with pagers was advanced in 50 or 100 feet increments, depending on the test, and the individual pager results recorded. Testing required two people, one operating the hand truck and documenting the results and the other operating the laptop software. Pages were initiated manually using the aSE Administration software.

Figure 25: Pager Range Test Fixture - WTI Photo

Range test results for pagers numbered 1 through 12 are shown in Table 8. The table indicates a reliable range of about 500 to 600 feet, which is marginal for the WTI application, so ground planes were explored for extending the range.

Table 8: Initial Pager Range Results

Range (ft.)	Pager #											
	1	2	3	4	5	6	7	8	9	10	11	12
450		x		x	L	x	L	x	x	x	x	x
550	x	x		x	x	x	x	x	x	x	x	x
650	x	x	x	x	x	x	x		x		x	x
750	x	x		x	x	x	x	x	x		x	x
800		x		x	x		x		x			x
850				x	x			x				
950												
1050												

x	Paged
	No Page
L	Late Page
	Not Tested

1150												
1250												
1350												
1450												
1550					x				x			
1600					x				x			

Error! Reference source not found. shows the "no ground plane" test fixture which uses a piece of cardboard to hold the antenna in the frame. **Error! Reference source not found.** shows the small ground plane which is a small aluminum plate approximately 6 inches in diameter. The plate is setting on the piece of cardboard to isolate the plate from the frame. Figure 28 shows the large ground plane which is a 2 foot square aluminum sheet. It is also setting on the piece of cardboard.

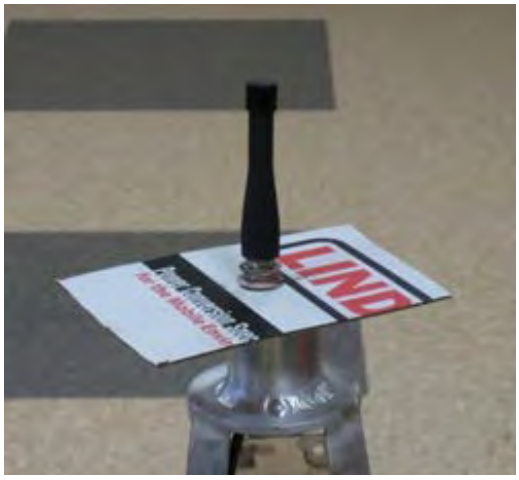

Figure 26: No Ground Plane – WTI Photo

Figure 27: Small Ground Plane - WTI Photo

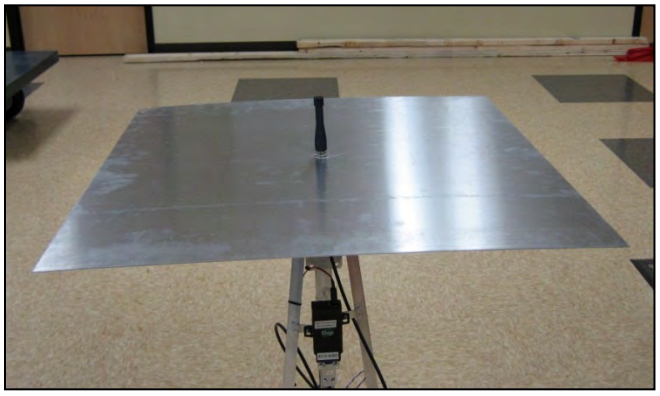

Figure 28: Large Ground Plane - WTI Photo

Ground plane testing started near Kagy Boulevard with the pager transmitter placed near the intersection of Kagy and 11th Avenue. See Figure 29.

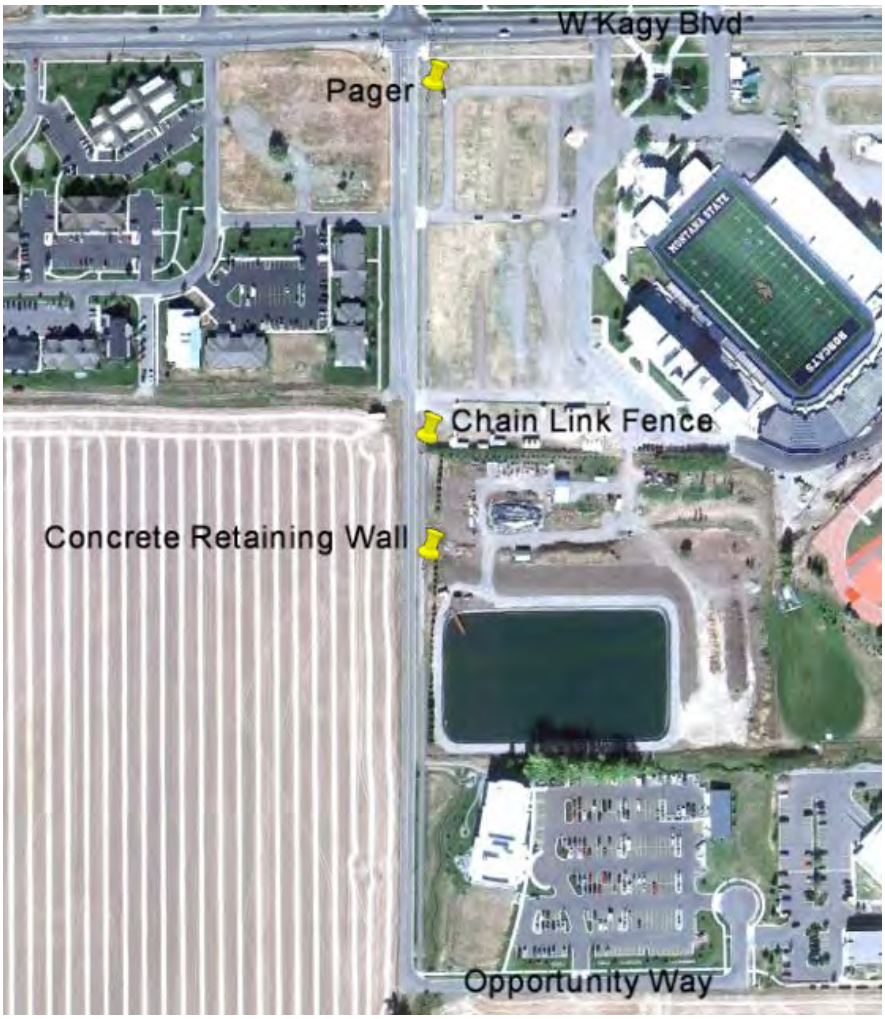

Figure 29: Pager Test Site - Google Earth Image

Pagers #6, #7, and #8 were used in the same setup as the previous tests with the beep activated for easier recognition.

Table 9 compares the range with and without a ground plane. Note that range significantly improves with a large ground plane but even a small ground plane makes a noticeable improvement.

Table 9: Ground Plane Test Results

Range (ft)	No Plane				6" Plane				24" Plane			Comments
	Pager #				Pager #				Pager #			
	6	7	8		6	7	8		6	7	8	
100	x	x	x									
200	x	x	x									
300	x	x	x		x	x	x					
350					x	x	x					
400	x	x	x		x	x	x		x	x	x	
450					x	x	x		x	x	x	

500	x	x			x	x	x		x	x	x	Chain Link Fence Begins
550	x	x	x		x	x	x		x	x	x	
600	x	x	x		x	x	x		x	x	x	
650	x	x			x	x	x		x	x	x	
700		x				x			x	x	x	Concrete Retaining Wall Begins
750	x	x			x	x			x	x		
800						x	x		x	x	x	
850	x	x			x	x	x		x	x	x	
900	x	x			x	x	x		x	x	x	
950	x	x	x		x	x	x		x	x	x	
1000		x			x	x	x		x	x	x	
1050		x			x	x			x	x	x	
1100	x				x				x	x		
1150						x			x	x		
1200						x			x	x		End of Distance Test

x Paged No Page

Some observations by the tester:

- No ground plane - There were three distinct beeps as each pager received the page.
- 6” ground plane - All beeps were essentially simultaneous, until the 650’ mark, when they started to become distinct from each other.
- 24” ground plane - All beeps were simultaneous until the 1100’ mark.

After returning from the first two weeks of deployment and discussing pager range issues with LRS, it was suggested three pagers be returned to LRS for tuning. Since there was not enough time to get the pagers tuned before returning to Los Banos, four tuned pagers were purchased for use during WTIs June deployment.

The new tuned pagers were range tested along with three of the other pagers before returning to Los Banos. They were arranged on the hand truck as shown in Figure 30. Note the pagers were placed in front of the metal handles; this reduced the possibility of the handles affecting the results. The pager drum was placed across the street to reduce the possibility of the retaining wall or the chain link fence affecting the results.

Figure 30: Pager Range Test Fixture

The "tuned" pager range test results are shown combined in Table 10. The pager order was, from left to right, 6, 7, 8, 13, 14, 15, and 16 in the left side table and 16, 15, 14, 13, 8, 7, and 6 in the right side table. The pager order was reversed in the second test to check whether the position on the hand truck influenced the results. As the tables show, there was significant performance change for some pagers but more testing would be needed to identify the exact cause.

Note that the tuned pagers 13, 14, and 15 performed much better than the unturned pagers although pager 16 appears to have some issue with its first position. More testing would be needed to identify the exact cause.

Table 10: Pager Range Comparisons

Range (ft.)	Pager #									Range (ft.)	Pager #							
	6	7	8		13	14	15	16			6	7	8		13	14	15	16
100	x	x	x		x	x	x	x		100								
200	x	x			x	x	x	x		200	x	x	x		x	x	x	x
250	x				x	x	x	x		250	x	x	x		x	x	x	x
300	x	x	x		x	x	x	x		300		x	x		x	x	x	x
350	x	x	x		x	x	x	x		350	x	x	x		x	x	x	x
400	x	x	x		x	x	x	x		400	x	x	x		x	x	x	x
450	x	x	x		x	x	x	x		450	x	x	x		x	x	x	x
500	x	x	x		x	x	x	x		500	x	x	x		x	x	x	x
550	x	x	x		x	x	x	x		550		x			x	x	x	x
600	x	x	x		x	x	x			600					x	x	x	x

650		x	x		x	x	x			650					x	x	x	x
700	x	x	x		x	x	x	x		700	x	x	x		x	x	x	x
750	x	x	x		x	x	x	x		750	x	x	x		x	x	x	x
800	x	x	x		x	x	x			800	x	x			x	x	x	x
850	x	x	x		x	x	x			850	x	x			x	x	x	x
900	x	x	x		x	x	x			900	x	x			x	x	x	x
950	x	x	x		x	x	x			950	x	x			x	x	x	x
1000	x	x	x		x	x	x			1000	x	x			x	x	x	x
1050		x	x		x	x	x			1050	x	x			x	x	x	x
1100					x	x	x			1100	x	x			x	x	x	x
1150	x	x	x		x	x	x			1150	x	x			x	x	x	x
1200		x	x		x	x	x	x		1200					x	x	x	x
1250		x	x		x	x	x	x		1250					x	x	x	x
1300					x	x	x			1300					x	x	x	x
1350					x	x	x	x		1350								

x Page No Page

Since the tuned pagers were still performing well at 1300+ feet in the previous range tests, the test was repeated the next day, extending the range to 2200 feet, where most of the pagers failed. See Table 11. Note pager order was again 16, 15, 14, 13, 8, 7, and 6, left to right.

Table 11: Pager Range Results

Range (ft.)	Pager #							
	6	7	8		13	14	15	16
500	x	x	x		x	x	x	x
600	x				x	x	x	x
700	x	x			x	x	x	x
800	x	x			x	x	x	x
900					x	x	x	x
1000	x				x	x	x	x
1100	x	x			x	x	x	x
1200	x				x	x	x	x
1300	x				x	x	x	x
1400	x	x			x	x	x	x
1500	x				x	x	x	x
1600					x	x	x	
1700	x	x			x	x	x	x
1800	x	x				x		x
1900						x	x	
2000							x	
2100					x	x	x	
2200							x	

x	Page
	No Page

To corroborate range results measured near WTI and to see if the retaining wall or chain-link fence had any effect on the results, the pager system was taken along to WTIs Transcend lab where further pager range tests confirmed the previous results. Pager range from the repeater was also measured resulting in a range similar to the pager transmitter of approximately 600 feet.

Note when measuring pager range from the repeater, when the pagers were between the pager transmitter and the repeater, they did not beep in unison, however they all did beep. The pagers beeped in unison prior to switching the repeater on, and when past the repeater.

Repeater range was measured by placing the repeater and four pagers on the hand truck and moving away from the pager transmitter until the pagers stopped beeping. Measuring the distance back to the pager transmitter showed the distance to be 1700 feet.

In conclusion, the range testing showed that tuned pagers have approximately twice the range of an unturned pager, a ground plane improves range, and if tuned pagers are used a repeater may extend the range to over 3000 feet.

2.6.4. Software

The system requires two types of software:

- Control software that runs on the controller in a master cone that operates the system,
- Management software that runs on a laptop computer for system configuration and testing.

Initially the controller software was run from the SD card in the controller. This enabled the cone type to be determined by the SD card inserted into the controller. Master and logger versions of the software were written. Master software controlled the light, radio and logged data while the logger version only logged data. Both versions logged data to the SD card.

This configuration turned out to have several drawbacks. One important aspect of the software was to enable synchronizing the controller clocks so the logged data could be compared between cones. The Moxa controller has both hardware and software clocks which drift independently. This made tracking individual vehicles across several cones difficult.

Another issue was file corruption, occasionally files on the SD card would get corrupted which stopped the system. If this happened the controller had to be power cycled to function again.

In the pilot design the control software was moved into the controller memory and the management software rewritten to configure it. See the pilot design software section for a more detailed description.

2.7. Pilot Design

After confirming assembly and component performance, a second design was developed to support piloting testing on the open road. This pilot design focused on making the system crash worthy. A similar system, the iCone, uses a drum and had been successfully crash tested so it was decided to switch to drums. Drums are large enough for easy interior access to mount components so a frame was not necessary. Also the drum has a base that separates when the

drum is impacted. These drums are also approved for self-certification as crash worthy for on road deployment.[2]

The master drum has a controller, radar sensor, radio, light, light switch and battery; the pager transmitter was moved to a separate drum. There are four such master drums in the full system. The remaining drums with lights are referred to as "slave drums" which do not include a radar sensor or controller. The pager drum includes a pager transmitter, battery, and radio, but does not have a radar, controller, light or light switch. A repeater drum only has a repeater and battery. All drums follow a similar design to the master drum. A bill of materials (BOM) for each drum type is included in Appendix B. The pager and repeater drums are intended to be placed away from traffic, out of harm's way, although they are as crash-safe as the master drum.

2.7.1. Components

The sDrum has two main parts: drum and base. The drum houses the radio and radar and has a warning light attached to the top. The drum is intended to be placed with the handle perpendicular to the direction of traffic with the light facing traffic. This orientation points the radar toward traffic. The radar is located behind the four screws slightly below the light. See Figure 31.

Figure 31: Assembled Master Drum

The radar module is mounted near the top of the drum for best performance. The system radio is near the top but below the radar to minimize any signal blockage. The radar and radio are light-weight and are attached inside the drum so the crash damage risk should be minimal. The remaining components are located in the base of the drum.

[2] http://safety.fhwa.dot.gov/roadway_dept/policy_guide/road_hardware/workzone/pdf/wz-54.pdf

2.7.1.1. Drum

A TrafFix Generation IV low density polyethylene (LDPE) drum (*38*) is housing the system components. See Figure 32. It meets the crashworthy requirements of NCHRP 350 – Recommended Procedures for the Safety Performance Evaluation of Highway Features (*39*). The drum has two four- inch orange and two four- inch white high intensity reflective bands for visibility.

Figure 32: TrafFix 1800 LDPE Drum – WTI Photo

2.7.1.2. Base

The TrafFix Standard Base snaps into the drum so it will separate from the drum if the drum is impacted. A factory sandbag base with the drain holes plugged is shown in Figure 33.

Figure 33: TrafFix Standard Drum Base - WTI Photo

The tabs were not being utilized so they were removed, reducing the drums footprint for transportation and storage. The holes in the base were plugged and sealed with silicone sealant to minimize water intrusion. See Figure 34.

Figure 34: TrafFix Standard Drum Base with Tabs Removed - WTI Photo

The radar, light and system radio remain affixed to the drum, with the radar and system radio inside, minimizing the potential of separate impact in the event of a crash. All connections from the drum mounted components to the base have quick disconnects, allowing the drum to separate from the base upon impact.

The combined weight of the drum and base is approximately 40 pounds with all components installed. If additional weight is required to minimize movement caused by traffic and high winds a tire ring can be added. See Figure 35.

Figure 35: Master sDrum with Tire Ring – WTI Photo

Sand was typically used but today drum weights made of recycled rubber tires are more common and come in 25 to 40 pound base rings (*38*).

2.7.1.3. Warning Light

Crash worthiness of the warning light was investigated with the following results.

From Federal Highway Administration (FHWA) Memorandum WZ54 dated 9/15/2000, in section C titled "Drums with Warning Lights" states "Because of successful crash testing of drums and other channelizing devices with common warning lights we now believe that most drums with Type A or C warning lights firmly affixed with vandal resistant hardware are crashworthy and may be self-certified by the vendor". A table also provides the dimensions and materials of drums with warning lights in common use that are considered crash worthy (*40*).

Additionally the warning light is described as up to 2.4 kg with a polycarbonate lens diameter of 180 mm to 200 mm and height of 270 mm to 340 mm.

Further in section D titled "Lightweight Warning Lights" it states "A number of other channelizing devices (various vertical panels, barricades) have been successfully crash tested using "lightweight" warning lights." It goes on to describe lightweight warning lights as having a mass of 1.5 kg (3.3 pounds) or less and a circular plastic lens of nominal 7 inches in diameter. The described warning light is directional horizontally which would make it difficult to see by both motorists and work zone workers.

Type A and C warning lights are, from the MUTCD, for night time use and would not be bright enough for use in daylight (*41*). A Type B warning light would be required for daylight use.

The Class II Whelen L22 LED beacon has encapsulated electronics with a polycarbonate base and dome, a mass of 2 pounds and a plastic lens diameter and height of 5.3" and 5.8" respectively, which roughly fits the lightweight warning light description.

The warning light is securely attached to the top of the drum with three #10 stainless steel bolts. A 1/8" thick UHMW polyethylene plate is used on the inside of the drum to ensure the light stays attached to the drum on impact. A small lightweight UHMW polyethylene wedge shaped spacer is installed between the light and the sloped surface of the drum to level the light. The light base is potted polycarbonate and the light lens is polycarbonate for impact fragmentation resistance.

Although the warning light is partially blocked by the drum handle, the light has a horizontal lens that focuses the light in a horizontal plane around the light which is located above the handle. See Figure 36. Due to the lens, light intensity is only slightly diminished when viewed from the handle side of the drum.

Figure 36: Warning Light Mounted on sDrum – WTI Photo

2.7.1.4. Wiring Harness

The wiring harnesses between the drum base and drum are shown in Figure 37. The upper harness is the charge cable and the lower harness is power and data. Both harnesses have quick disconnects that enable the drum to detach from the base when impacted. High quality sealed crimp connectors and Tefzel wire were used for reliability.

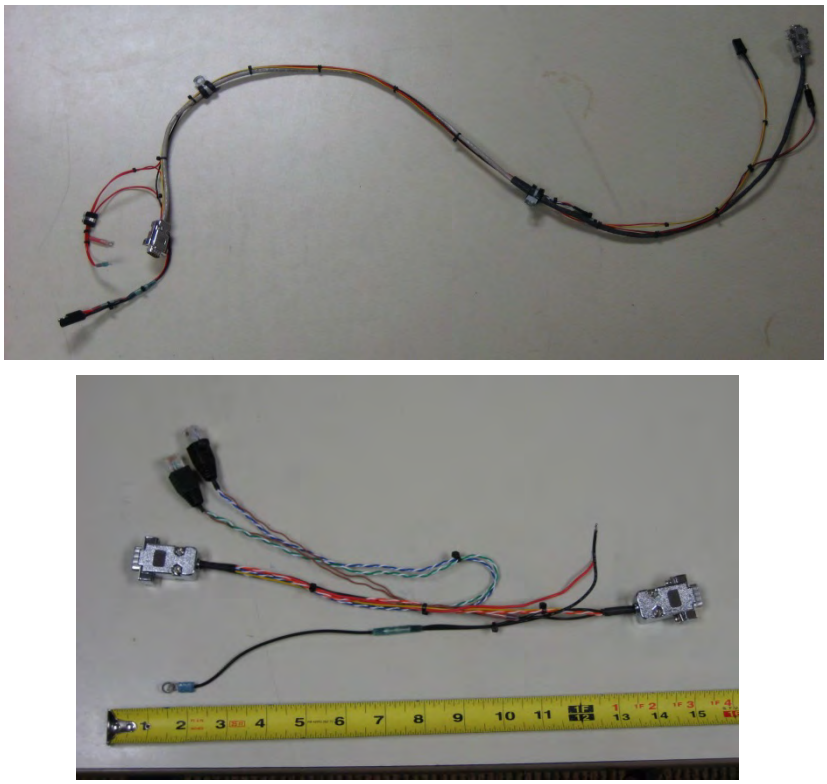

Figure 37: Master Drum Wiring Harness – WTI Photo

2.7.1.5. Charging System

The battery charging system consists of a fused (10A) cable connected between the battery and the covered 2-pin SAE connector on the drums exterior. This allows the batteries to be charged without opening the drum.

The 10-bank Battery Tender charging cables were modified by adding a mating 2-pin SAE connector. See Figure 38. The charger outputs 2-amps per bank which allows 10 drums to be charged from 50% charge to 100% charge in approximately ten hours (overnight).

Figure 38: sDrum Charging – WTI Photo

2.7.1.6. Mounting Brackets

The mounting brackets were made from formable aluminum sheet and the light brackets were cut from of polyethylene rods for crash worthiness.

The radio and protective mounting plate is shown in Figure 39. The plate is made from 1/16" thick 3003 aluminum sheet material. It protects the radio's plastic ears from breakage during handling and deployment.

Figure 39: Digi Radio with Mounting Plate – WTI Photo

Shown in Figure 40 is the radar mounting bracket with radar installed. The mounting bracket is also made from 1/16” thick 3003 aluminum. Note the radar is facing down.

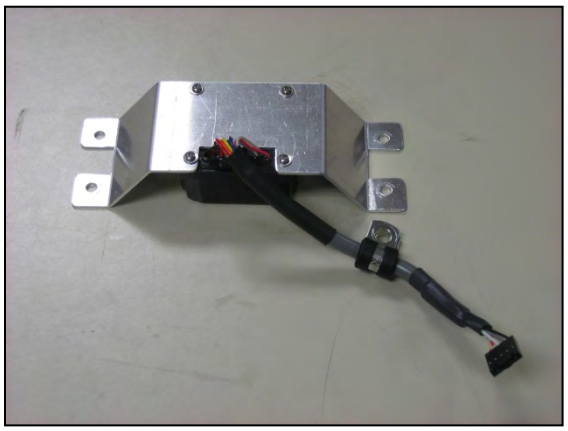

Figure 40: Radar with Mounting Bracket – WTI Photo

The warning light with gasket, leveling wedge and anti-pullout plate is shown in Figure 41. The wedge and anti-pullout plate are cut from polyethylene rod stock. The anti-pullout plate tends to potato chip when sliced from the rod but that did not affect its functionality.

Figure 41: Warning Light with Major Mounting Components – WTI Photo

The controller/light switch mounting bracket is shown in Figure 42. It's formed from 0.080" thick 3003 aluminum sheet material. The controller is attached to the bracket with six 3 mm stainless steel screws and the light switch is attached with four #10-32 SS screws and Nyloc nuts.

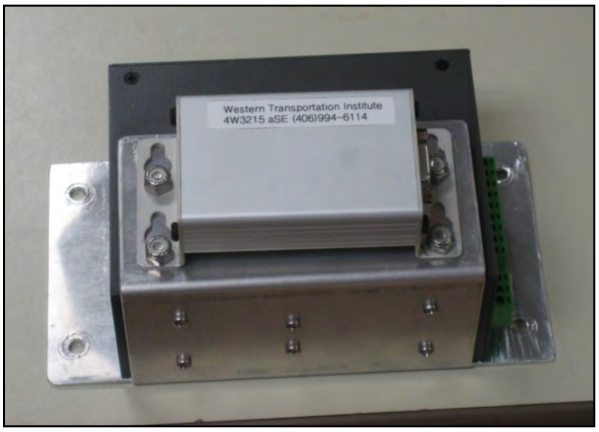

Figure 42: Controller and Light Switch attached to Mounting Bracket – WTI Photo

The battery tray and mounting bracket can be seen in Figure 43. The battery tray is formed from 1/16" thick 3003 aluminum with the corners welded. The tray is spot welded to the base plate at eight locations. The battery strap is formed from 0.080" thick 3003 aluminum and attaches to the base studs with Nyloc nuts. A gasket is used under the battery and bracket to minimize wear to the battery from vibration.

Figure 43: Battery Tray and Strap – WTI Photo

Researching higher capacity standard AGM batteries found all to be significantly taller by approximately two inches, raising concerns about their crash worthiness. A larger/higher capacity battery would help bring the weight up to the 50 pounds required to keep the drum from moving around when deployed but it would also make it more cumbersome to handle(*42*).

Figure 44 shows the drum base assembly which includes the battery, controller, and light switch. The components are attached to an aluminum base plate that is bolted to the drum base with six #10 steel studs.

Figure 44: Master/Logger sDrum Base Assembly – WTI Photo

Figure 45 shows the straps under the drum base which prevent the screws from being pulled through the plastic base on impact. The base plate is fabricated from 0.090" thick 6061 aluminum to minimize bending with handling.

Figure 45: Bottom of sDrum Base – WTI Photo

2.7.2. Drum Assembly

Components from the prototype design and the components described in the previous section were assembled into smart drums (sDrum).

2.7.2.1. Master

An open master sDrum is shown in Figure 46. It shows the drum's component locations and the wiring harness.

Figure 46: Assembled Master sDrum – WTI Photo

The white polyethylene plate visible at the top of the drum in Figure 46 is part of the warning light assembly and prevents the screws from being pulled through the plastic drum on impact. The anti-pullout plate is 1/8" thick polyethylene. The radar can be seen attached to the drum wall above the light plate. The radio is attached to the drum wall on the left. The connector for the external Ethernet connection can be seen on the top, to the right of the radio.

The Houston Radar Model SS300 radar module is securely attached to the inside of the drum near the top with the aluminum bracket. There should be minimal chance of the radar being detached from the inside of the drum in the event of a collision.

The system radio is securely attached to the inside of the drum near the top with the aluminum bracket. There should be minimal chance of the component being detached from the inside of the drum in the event of a collision.

The light switch is attached to the aluminum bracket with stainless steel (SS) bolts and locknuts. Then the Moxa IA240-LX controller is screwed to the same bracket with 3 mm SS screws. The bracket is bolted to the drum base plate using the installed studs and nylon locknuts.

The AGM battery sets in an aluminum tray that is welded to the baseplate. The battery is securely strapped to the base plate with a 3" wide aluminum bracket. The battery powers the system components including the warning light.

The wiring harness is bolted to the drum using rubber cushioned loop clamps and #10 SS screws and Nyloc nuts. Loop clamps are also used near each connector for support.

The radar sensor, system radio, and warning light are the only components attached to the drum itself. This arrangement places most of the largest and heaviest components near the ground, minimizing the possibility of flying debris if impacted.

2.7.2.2. Slave

An open slave sDrum is shown in Figure 47. The component locations and the wiring harness are displayed.

Figure 47: Assembled Slave Drum - WTI Photo

The white polyethylene plate visible at the top of the drum in Figure 47 is part of the warning light assembly and prevents the screws from being pulled through the plastic drum on impact. The anti-pullout plate is 1/8" thick polyethylene. The radio is attached to the drum wall on the left.

The light switch is attached to the base plate using the installed studs and nylon locknuts.

The system radio is securely attached to the inside of the drum near the top with the aluminum bracket. There should be minimal chance of the radio being detached from the inside of the drum in the event of a collision.

The AGM battery sets in an aluminum tray that is welded to the baseplate. The battery is securely strapped to the base plate with a 3” wide aluminum bracket. The battery powers the system components including the warning light.

The wiring harness is bolted to the drum using rubber cushioned loop clamps and #10 SS screws and Nyloc nuts. Loop clamps are also used near each connector for support.

The system radio and warning light are the only components attached to the drum itself. This arrangement places most of the larger components near the ground, minimizing the possibility of flying debris if impacted.

2.7.2.3. Pager

Figure 48 shows an open pager sDrums component locations and cabling.

Figure 48: Assembled Pager Drum - WTI Photo

The pager transmitter is attached to the base plate using two light-weight aluminum straps bolted to the studs with nylon locknuts. The pager antenna is attached to the drum with a pull-away bracket that enables the coaxial cable and antenna to remain attached to the base if the drum is impacted.

The system radio is securely attached to the inside of the drum near the top with the aluminum bracket. There should be minimal chance of the radio being detached from the inside of the drum in the event of a collision.

The AGM battery sets in an aluminum tray that is welded to the baseplate. The battery is securely strapped to the base plate with a 3” wide aluminum bracket. The battery powers the system components.

The system radio and pager antenna are the only components attached to the drum itself. This arrangement places most of the larger components near the ground, minimizing the possibility of flying debris if impacted.

2.7.2.4. Repeater

An open repeater sDrum is displayed in Figure 49. It shows the component and antenna locations.

Figure 49: Assembled Repeater Drum – WTI Photo

The repeater is attached to the base plate using two light-weight aluminum straps bolted to the studs with nylon locknuts. The repeater antenna is attached to the drum with a pull-away bracket that enables the coaxial cable and antenna to remain attached to the base if the drum is impacted.

The AGM battery sets in an aluminum tray that is welded to the baseplate. The battery is securely strapped to the base plate with a 3” wide aluminum bracket. The battery only powers the repeater.

The repeater antenna is the only component attached to the drum itself and it remains with the base if the drum is impacted. This arrangement places all of the larger components near the ground, minimizing the possibility of flying debris if impacted.

2.7.3. sDrum Power Measurements

Power consumption can be calculated by measuring the current and multiplying it times the voltage. Since in this case battery voltage is basically a constant, current is used to compare power consumption of the different states and drum types. Current consumption was measured using a Medusa Research Inc. Power Analyzer Pro on all four types of drums:

- Master,
- Slave,
- Pager and,
- Repeater.

The master drum has the five different current states shown in Figure 50 and listed below:

- Initial power on,
- Powered up dim light,
- Light flash bright,
- Light off and,
- Light flash dim.

When the drum's power is switched "on" the warning light illuminates dimly, indicating the drum is powered up. In Figure 50 the power on step creates the initial current surge of approximately 410mA, followed by the current settling back to about 290mA with a steady dim warning light.

The current draw jumps to about 560mA when the light is flashed bright and alternates between 560mA (on) and 220mA (off) as the light is flashed. The light then remains off with the components drawing 220mA until the light's commanded to flash again. If the light is switched to dim the maximum flash current is approximately 290mA, also shown in Figure 50.

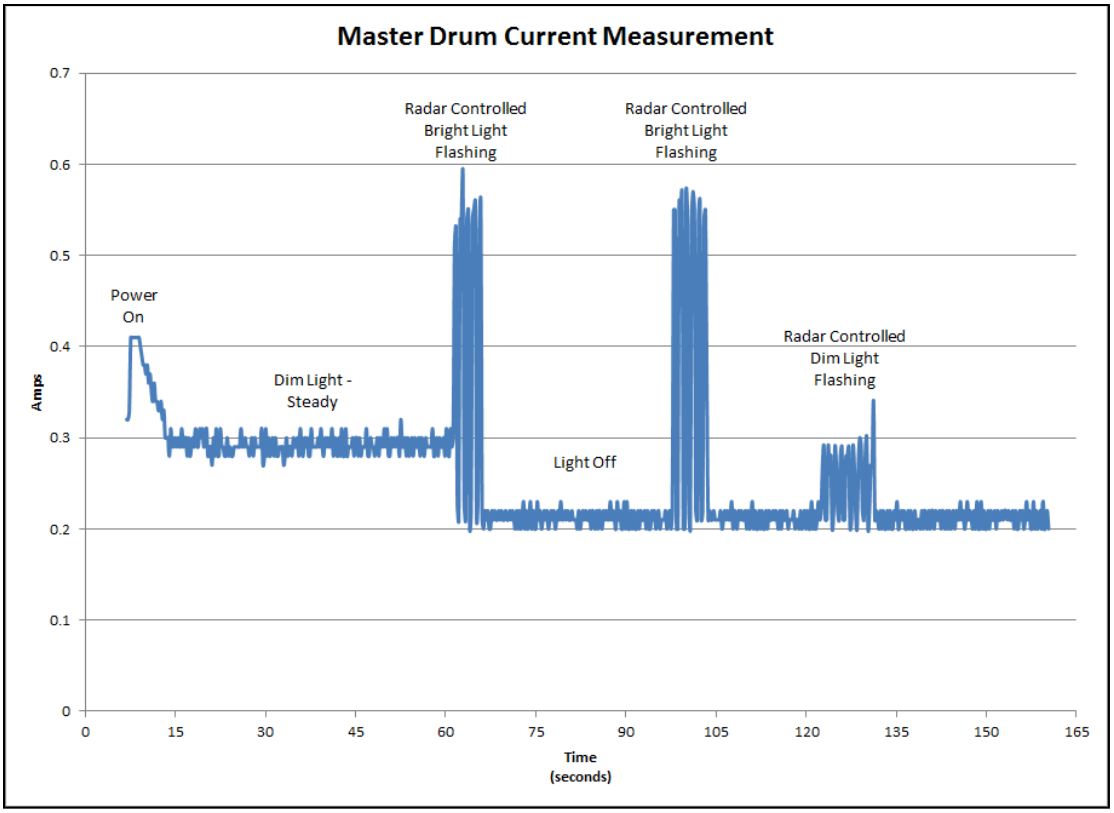

Figure 50: Master Drum Current

The slave drum current, shown in Figure 51, has the same profile as a master drum except all the values are approximately 150mA less due to no controller or radar.

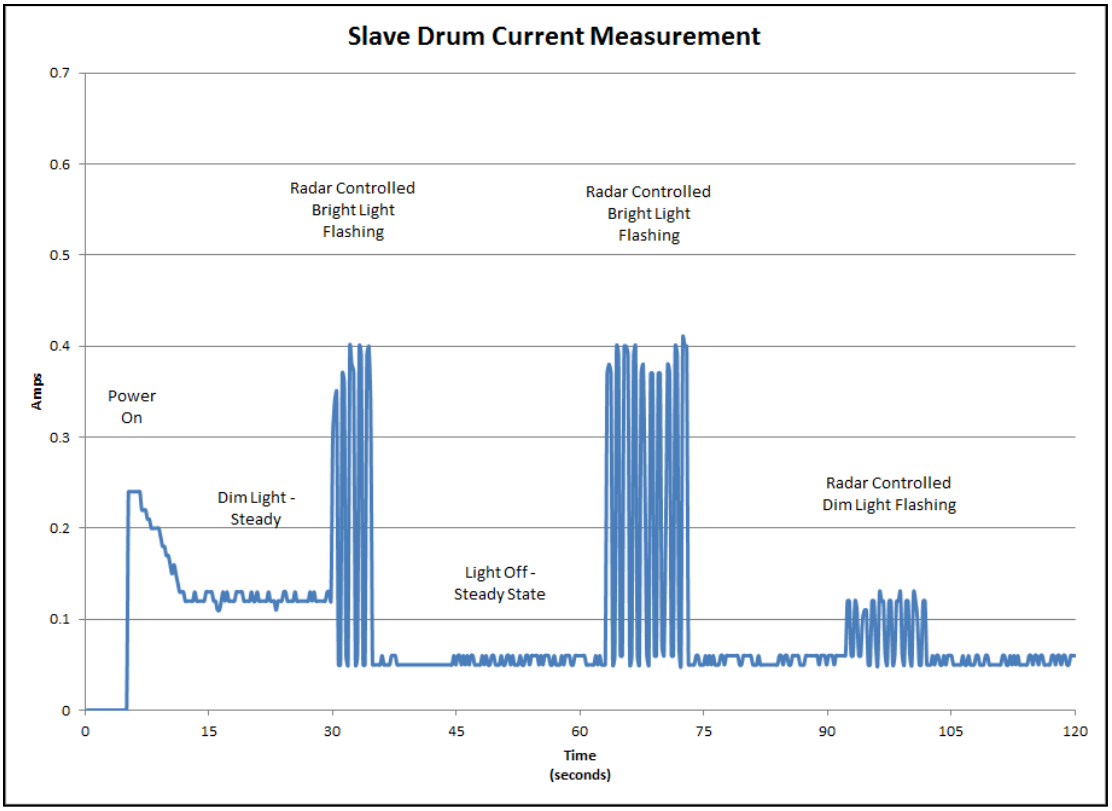

Figure 51: Slave Drum Current

The pager drum has the three current states shown in Figure 52:

- Initial power on,
- Page and,
- Standby.

When the pager drum's power is switched "on" the pager transmitter is energized, drawing approximately 70mA. When the transmitter is commanded to page, the current jumps to over 500mA for a few seconds, then settles back to 90mA waiting for the next page command.

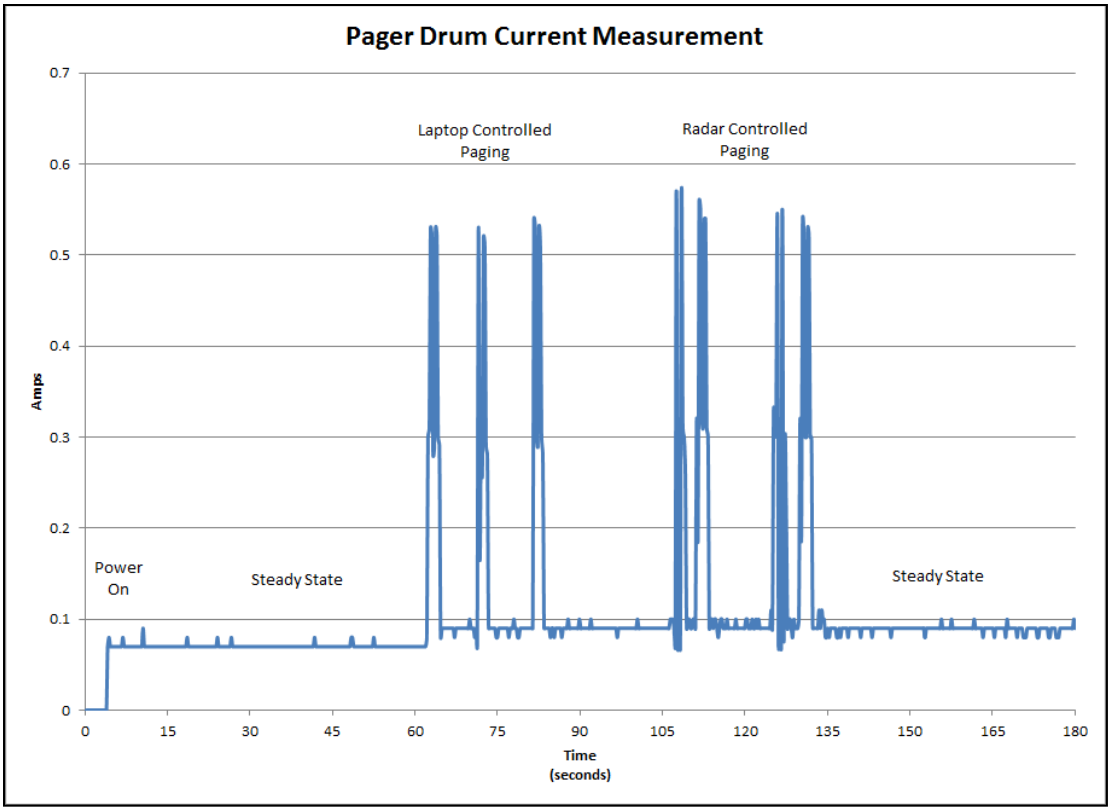

Figure 52: Pager Drum Current

The repeater drum has two states: standby and transmit. See Figure 53. When the repeater is switched "on" it goes into standby mode and draws approximately 30mA. When pager transmitter transmits, the repeater re-transmits (repeats) the page drawing about 1.4A.

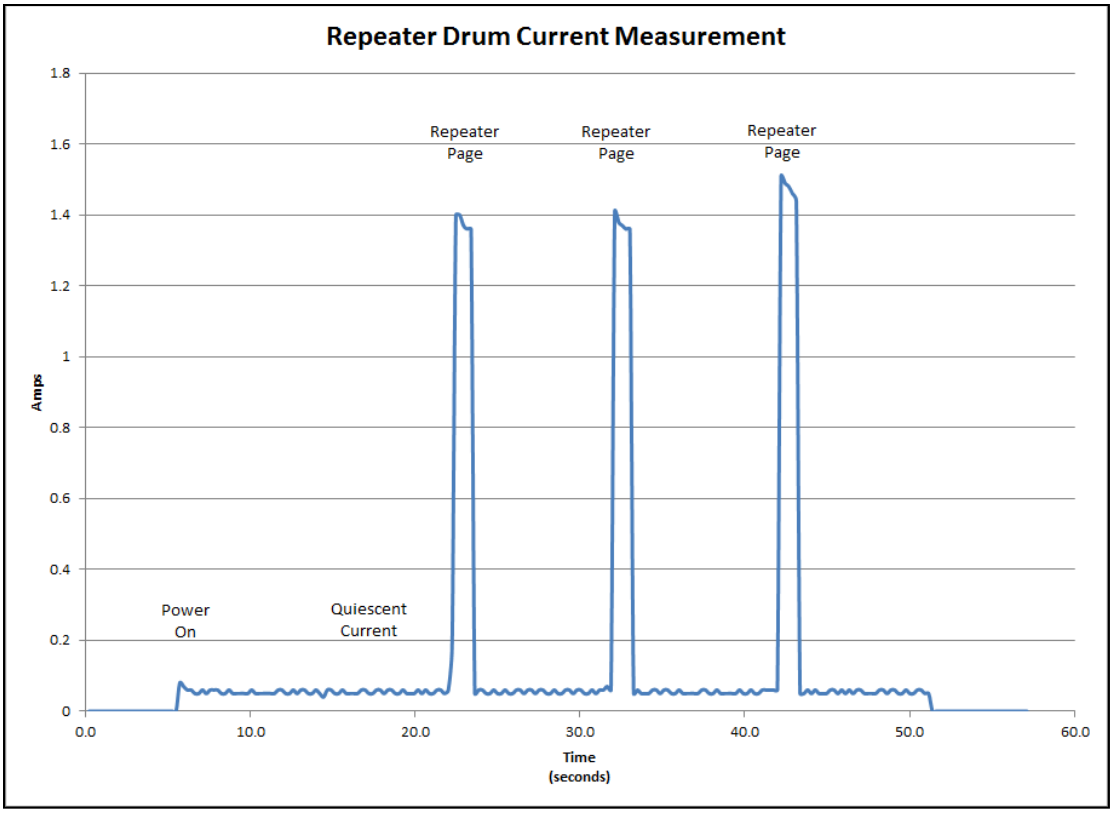

Figure 53: Repeater Drum Current

To relate the current draw to hours of operation before the battery needs recharging, divide the current draw into 13 amp hours (50% battery discharge). As an example, assuming the master drum's light is flashing bright 50% of the time, 0.56A x 0.5 + 0.22A x 0.5 = 0.40 amp average draw so 13 Ah / 0.4 A = 32.5 hours. For this scenario the master drum would operate 32.5 hours before needing to be recharged.

How often drums need to be recharged is a function of how often the light is flashed or the transmitter activated. It is expected that the light's speed setting would be increased to keep the lights from operating more that 50% of the time.

2.7.4. Administration Software Suite

The sDrum system requires two types of software:

- Linux control software that operates the system and runs on the Moxa controller,
- Management software for system configuration and testing which runs on a Windows laptop/desktop computer.

2.7.4.1. Control Software

The control software is installed on the Moxa computers located in the master and logger drums. It controls the data collection, paging and light states.

The Master/Logger configuration includes indication of whether the drum's role is master or logger, entry of time, including time zone, name for the device, and whether to format the attached SD card. Formatting the SD card ensures the card's file format is EXT3.

Note some file corruption issues were experienced with off-brand 1 GB SD cards so WTI switched to SanDisk 1 GB SD cards. No corruption problems were encountered using the SanDisk cards. Also, 1 GB is the largest capacity SD card that the Moxa computer will recognize.

2.7.4.2. Administration Software

The aSE administrative software is a Graphical User Interface for administrating the various functions of the sDrum system. The software can be used to connect to any master or logger although only set time, radar device and signal device can be accessed on a logger controller.

The aSE Administration software opening screen looks like Figure 54.

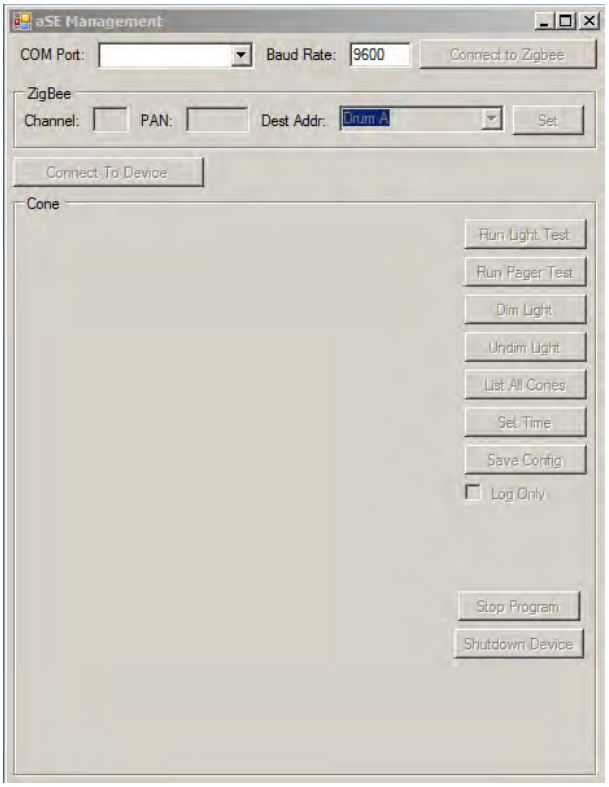

Figure 54: aSE Management Opening Screen – WTI Image

The appropriate COM port must be selected and the 9600 baud rate verified. The "Connect to Zigbee" button initializes the XStick.

When the XStick is connected the screen will look like Figure 55.

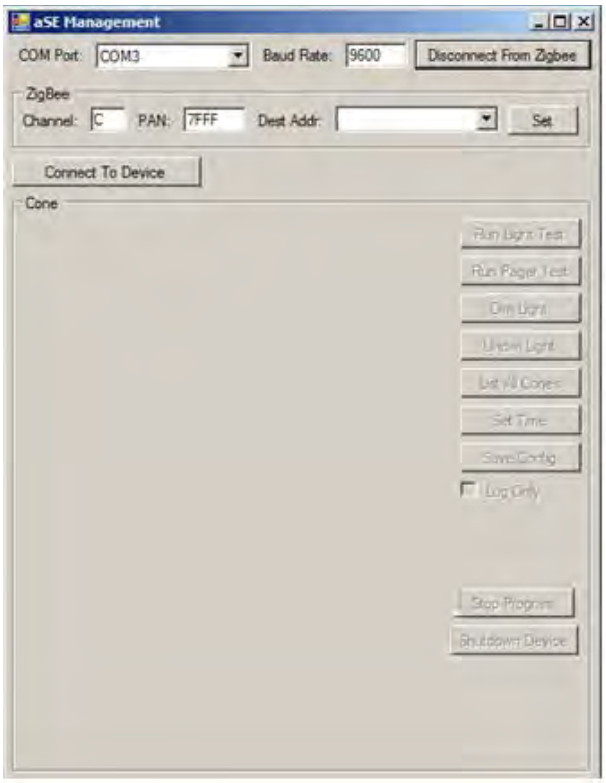

Figure 55: XStick Connected – WTI Image

By default, the Channel and PAN are set to "C" and "7FFF" respectively. Note all of the radios in the system must be set to the same Channel and PAN.

The "Dest Addr" is the address of the ZigBee radio for the drum the XStick is connecting to. The first time the aSE Administration software is run the 16 digit alpha-numeric Dest Addr must be entered. "Set" saves the communication settings. The XStick remembers the address from the previous session; however, to change the settings of another drum the new address must be entered.

The "Connect to Device" button initializes communication with the drum and will populate the interface with the drum's settings. See Figure 56.

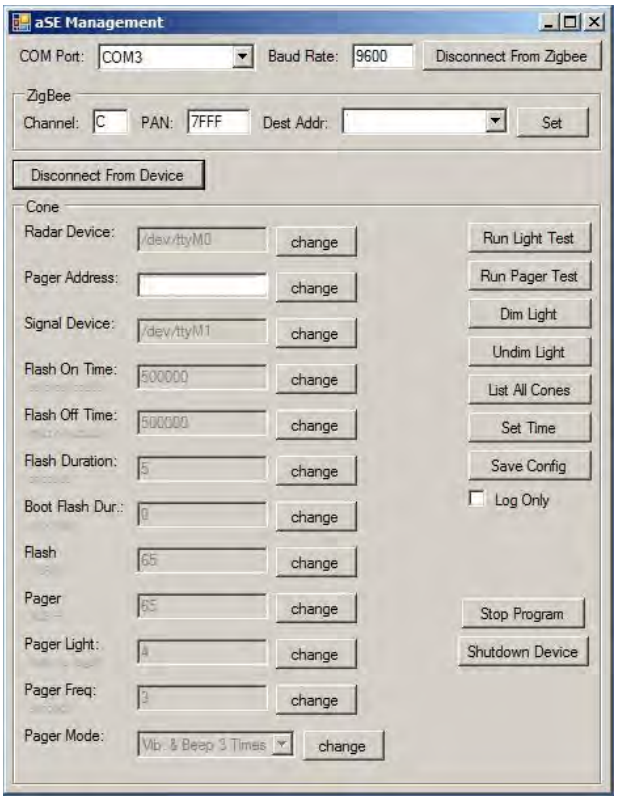

Figure 56: Connected to sDrum Screen – WTI Image

At this point, communication with the drum has been established and the functions of the drum can be configured. The following descriptions refer to Figure 56.

Adjustable Parameters:

- Radar Device - identifies the Moxa serial port the software expects the radar to be connected to. If by chance the RJ-45 connectors for the radar and the light become switched, this setting enables the ports in the Moxa software to be changed, restoring proper function.
- Pager Address - the radio address of the pager drum's ZigBee radio.
- Signal Device - the same function as the "Radar Device" function, described above.
- Flash On Time - the time that the light is illuminated, in microseconds. Currently set at 500000µs, or 0.5s.
- Flash Off Time - the time that the light is not illuminated, in microseconds. Currently set at 500000µs, or 0.5s.
- Flash Duration - the length of time that the lights flash after the radar confirms a speed above the trigger speed. It is currently set for 5 seconds.
- Boot Flash Duration - length of time in seconds that the light flash routine runs at power on. This is used to synchronize the radios upon initialization. Currently set at 0 seconds.
- Flash - speed in MPH that the Moxa needs to receive from the radar for it to begin the light flashing routine. This is currently set at 65MPH.

- Pager - threshold speed in MPH that the Moxa needs to receive from the radar for it to send a command to the pager transmitter. This is currently set to 65MPH.
- Pager Light[3] - sets the number of pager lights to illuminate. This is set at 4.
- Pager Freq - tells the pager transmitter how long to delay between pages. Currently set to 3 seconds.
- Pager Mode - changes the options of how the pager behaves when it receives a page from the pager transmitter. Currently the pager will vibrate and beep 3 times.

Button Functions:

- Run Light Test - sends a command to the master drum to turn the lights on and off for all of the drums within the master's network. This routine runs for the time specified by Flash Duration. This is useful for verifying that all of the drums in the network are functioning normally.
- Run Pager Test - sends a command to the master drum to transmit a single page. This test is useful for verifying pager operation.
- Dim Light - reduces the light's output by approximately 50% enabling the system to be used at night.
- Undim Light - reverses the Dim Light function and returns the light to 100% brightness.
- List All Cones - Opens a popup screen which lists the address of all of the drums connected to the master's network, initially the popup will be blank but when "Find Additional Cones" button is clicked, the address and ID of the connected drums will populate. In addition to the address, there is the RSSI (Returned Signal Strength Indication) which is a snapshot of the connection quality of the last hop to the address specified. The "Done" button closes the popup window. The popup is shown in Figure 57.

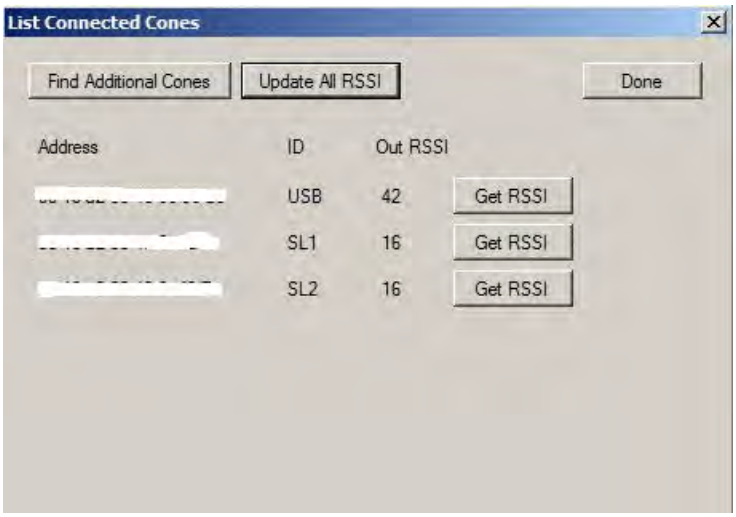

Figure 57: List Connected Cones Screen – WTI Image

[3] The pager has four LED lights; to initiate a page the number of lights to flash (1 to 4) must be included in the command.

Note: The XStick's ID is "USB" and since there are two other devices currently in the network, there are three addresses. The drum the XStick is "connected to" does not show up because it is doing the interrogation. The listed drums are connected TO the device being configured.

- Set Time - synchronizes the Moxa clock in the master with the clock of the laptop or desktop running the aSE Administration software.
- Save Config - saves all of the changes made during a session in the aSE Administration program to the memory in the master drum. If the Save Config button is not pushed, any changes made will be lost when the master is turned off. It will revert back to the last saved configuration upon restart.
- Log Only - ceases sending light flash commands to the drums in the network; it will continue to record the speeds sent by the radar. It is useful for operating the system incognito.
- Stop Program - stops the software program running on the Moxa. The master will not send light flashing commands or pager commands and will not record the speeds measured by the radar.
- Shutdown Device - turns the master's Moxa computer off. No further communication with the master drum is possible until the drum's power switch is turned off, then on again to reboot the system.

The "Disconnect from Device" severs communications with the drum; and "Disconnect from Zigbee" shuts off the XStick.

2.7.4.3. Data Retrieval

Data retrieval is achieved by using FTP software to access the log files through the drum's topside external Ethernet port. The log files are stored in the Moxa's "sd" directory which is the 1GB SD card in the Moxa.

The log files are named:

XX-lightstriggered_log-YYYY-MM-DD

XX-pagertriggered_log-YYYY-MM-DD

XX-speed_log-YYYY-MM-DD

XX-system_log-YYYY-MM-DD

"XX" is the name of the drum, and "YYYY-MM-DD" is the date when the file was created. Note the lights and/or pager must be triggered before their files are created. Deleting the log files from the SD card after downloading makes it easier to identify the files to download.

An example of speed log data is shown in **Error! Reference source not found.**. The format is date, time, time zone, and speed. It shows two vehicles, one following about two seconds behind the other.

Table 12: Speed Log Example

2012-05-14 09:41:53.914 PDT,0	2012-05-14 09:42:00.060 PDT,0
2012-05-14 09:41:54.345 PDT,49	2012-05-14 09:42:00.442 PDT,0
2012-05-14 09:41:54.725 PDT,49	2012-05-14 09:42:00.822 PDT,0
2012-05-14 09:41:55.106 PDT,49	2012-05-14 09:42:01.202 PDT,0
2012-05-14 09:41:55.488 PDT,47	2012-05-14 09:42:01.583 PDT,0
2012-05-14 09:41:55.869 PDT,45	2012-05-14 09:42:01.963 PDT,0
2012-05-14 09:41:56.251 PDT,45	2012-05-14 09:42:02.343 PDT,0
2012-05-14 09:41:56.632 PDT,45	2012-05-14 09:42:02.773 PDT,56
2012-05-14 09:41:57.013 PDT,42	2012-05-14 09:42:03.154 PDT,55
2012-05-14 09:41:57.394 PDT,42	2012-05-14 09:42:03.535 PDT,55
2012-05-14 09:41:57.775 PDT,40	2012-05-14 09:42:03.917 PDT,55
2012-05-14 09:41:58.156 PDT,40	2012-05-14 09:42:04.297 PDT,55
2012-05-14 09:41:58.537 PDT,40	2012-05-14 09:42:04.678 PDT,55
2012-05-14 09:41:58.918 PDT,40	2012-05-14 09:42:05.058 PDT,55
2012-05-14 09:41:59.299 PDT,40	2012-05-14 09:42:05.439 PDT,55
2012-05-14 09:41:59.680 PDT,40	2012-05-14 09:42:05.820 PDT,0

Note due to the multiple speed readings per vehicle, in a group of closely spaced vehicles an individual vehicle is not easily identified.

3. SYSTEM DEPLOYMENT AND EVALUATION

The WTI sDrum system was deployed as shown in Figure 58 for four weeks during May and June 2012 on State Highway 152 near Los Banos, California. The sDrum system was deployed independently from May 14th to the 18th and from June 11th to the 15th. From May 21st to the 24th and from June 18th to the 22nd both the sDrum system and the PATH system were deployed together.

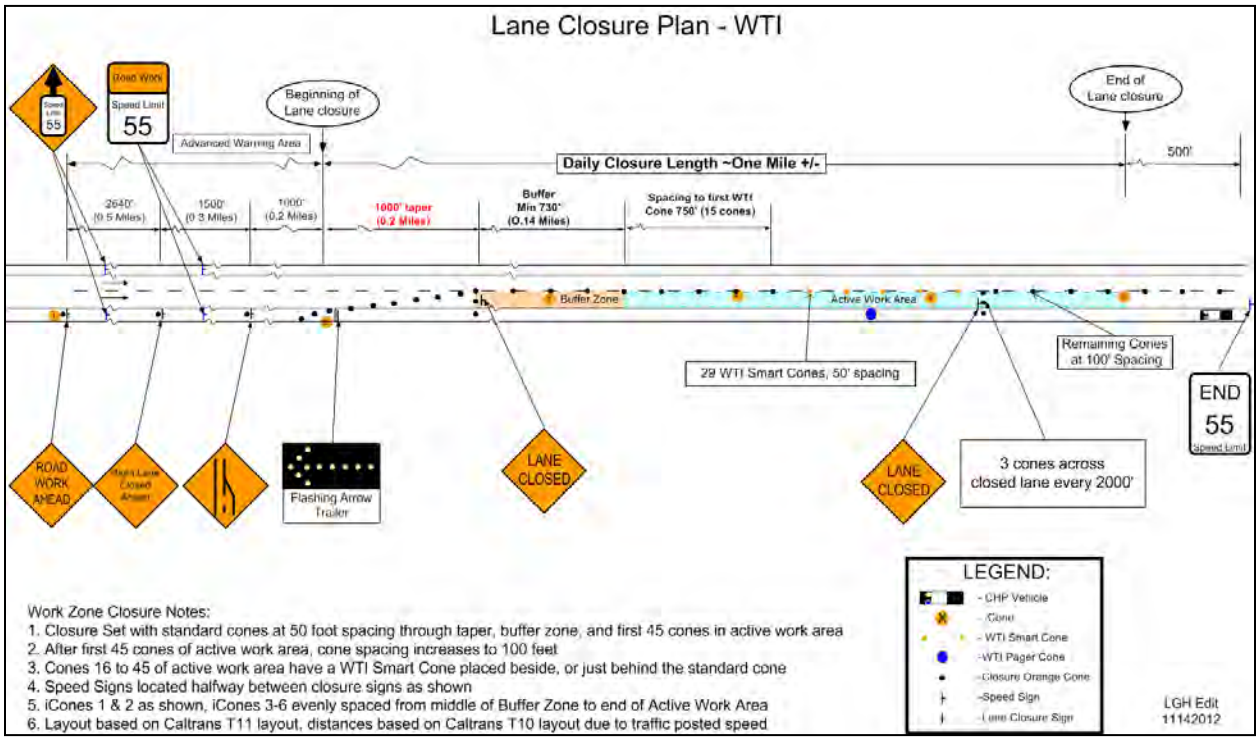

Figure 58: sDrum System Deployment – Modified Caltrans Image

The sDrum system consists of 28 orange traffic drums located adjacent to the orange cones marking the work zone closure. When the system detects a speeding vehicle approaching, it flashes the orange lights on top of the drums to warn the driver to slow down and the workers of a speeding vehicle. If the vehicle's speed is above the pager's set speed, the system also triggers a pager system to warn the workers and alert the CHP officer that a speeding vehicle is approaching.

The procedure for deploying the sDrum system was for the project team/teams to attend the morning briefing at 7 AM with the Caltrans maintenance crew, CHP, and any visiting crew. At the meeting the project team was told where the closure would be located that day, when the crew expected to have the closure set up, and picked up a Caltrans radio for communication with the maintenance crew and CHP. The maintenance crew typically left the yard at 7:45AM.

The project team waited at the yard until called by the crew lead, typically about 8:30AM, to proceed to the closure area. When the attenuator truck was freed up from setting the closure, it protected the WTI deployment team while the sDrums were being deployed. For deployment the rental truck was driven slowly in the direction of traffic, just inside the closure cones, enabling

the drums to be placed without stopping the truck. One or two members of the PATH team generally helped the WTI team deploy and retrieve the drums. Deployment typically took approximately 15 minutes after which time the rental truck was returned to the maintenance yard in Los Banos; it was felt the rental truck would be a driver distraction if parked in the ditch. The WTI project team returned to the closure area in a rental car to monitor traffic and sDrum operation.

At approximately 1:45PM the project team returned to the yard and drove the rental truck back to the closure. The maintenance crew started picking up the closure about 2 PM; when the crew got to the sDrums the project team was called to pick up the drums. The rental truck was driven against traffic to retrieve the drums enabling the picker to use the motion of the truck to naturally swing the drums into the back of the truck where the tire ring was removed and the drum placed in its assigned space by student assistants from PATH. Slave drums were matched to numbered spaces in the racks which simplified deployment. Eight slaves were placed between each logger so determining when to deploy a logger the helper only had to watch the slave numbers.

It took approximately 25 minutes to retrieve the drums. The project team then returned the truck to the yard while the maintenance crew finished picking up the closure. At the yard the project team down loaded the data, verified the drums were placed in the correct rack location, connected the appropriate drums for charging, completed any maintenance issues and got feedback from the crew.

The safety meetings and the maintenance crew stressed that before pulling into the closure wait for a natural break in traffic; the break was required to avoid having traffic follow you into the closure. Naturally waiting for a break in traffic was also required before leaving the closure. The closure taper shown in Figure 58 is known as “no man’s land”, stay out. Only go there if absolutely necessary and only when utilizing the attenuator truck for protection; it is the most dangerous area in a closure.

Note, occasionally the Caltrans crew got called for a priority closure so the project’s closure had to wait for them to return before deploying.

3.1. Light Brightness

The brightness of the warning light can be seen in Figure 59 below. The photo was taken at approximately three in the afternoon on a cloudless day looking east, away from the sun. Note although the lights appear to the naked eye to be flashing synchronously, Figure 59 shows that the flashing is not quite synchronized.

Figure 59: Warning Light Brightness – WTI Photo

3.2. Temperatures Inside sDrum

Internal drum temperature was occasionally measured with the Lascar EL-USB-1 temperature logger shown in Figure 60.

Figure 60: Lascar Temperature Logger - WTI Photo

The logger was clipped to the base plate to monitor near pavement temperature for two days and the other four days it was clipped to the top of the drum. See Figure 61.

At the end of the day the logger was retrieved and the temperature data copied to a laptop file.

Figure 61: Temperature Logging – WTI Photo

Shown in Figure 62 is a combined plot of each day's inside drum temperature and outside air temperature. The outside air temperature was obtained from a weather station approximately 12 miles east of the deployment area. For May 18, 2012 the temperatures were reported by the Los Banos RAWS website and for June they were obtained from the Caltrans Route 152 Ash Slough website.

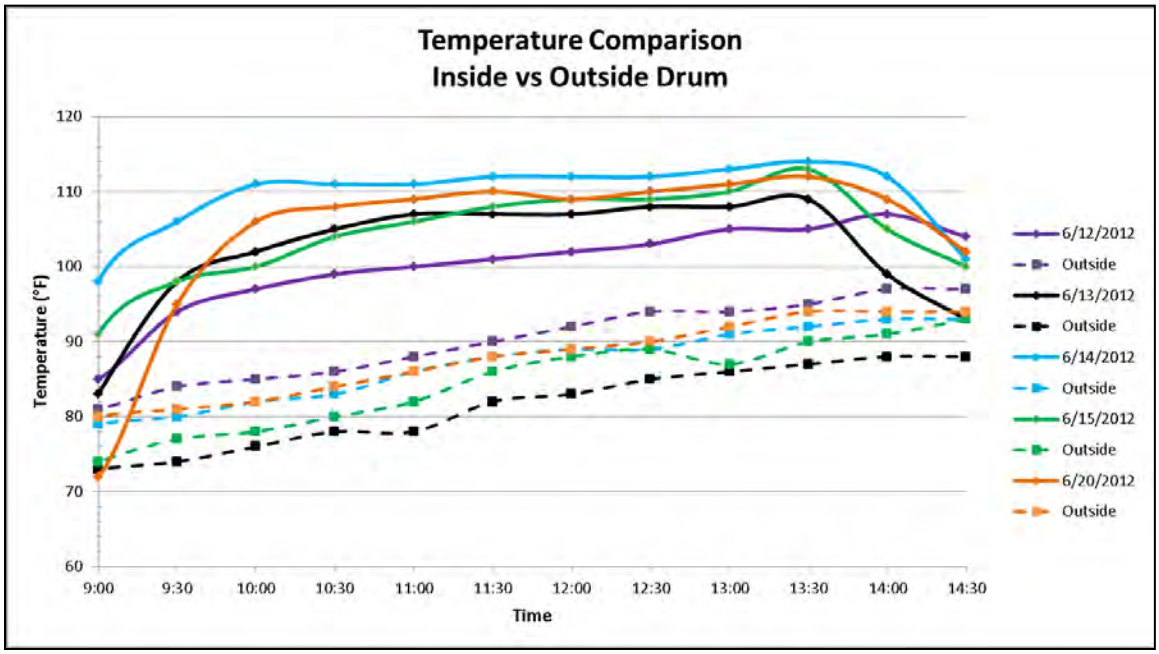

Figure 62: Temperature Inside versus Outside the Drum

In Figure 63 the temperature differential between inside and outside temperature is plotted for each day. Note the quick initial temperature rise at the top of the drum compared to the base.

Also, the temperature difference peaks, then falls off slowly until the drums are retrieved. Examining wind speeds and solar flux variation for those days did not identify a cause for the temperature decline. Note the sharp temperature decline about 13:30 was caused by retrieval of the drums.

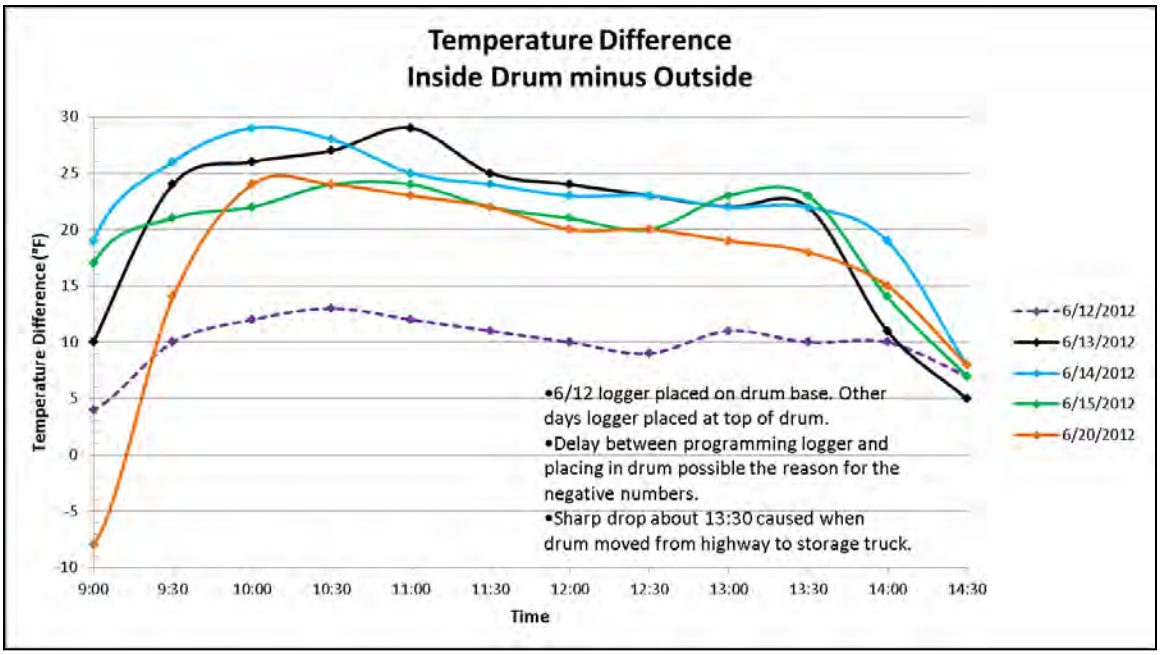

Figure 63: Temperature Rise inside the Drum

The plot in Figure 64 makes the slow temperature decline more noticeable. After much thought and discussion it is felt the temperature loggers location near the outside edge of the drum, possibly touching, see Figure 61, along with the drums position, which placed the logger on the east side, caused the unusual temperature profile.[4]

The sun's rays impinging on the drum raised the drum's temperature near the logger above the ambient temperature; as the sun moved overhead the solar heating near the logger declined to the point it was not affecting the measured ambient temperature.

After initial warm up the average temperature rise inside the drum was approximately 23 °F which indicates inside temperatures would not become excessive even on days when the ambient air temperature was over 100° F.

[4] Normally with a constant heat source inside an enclosure the inside temperature would rise to equilibrium then track the outside temperature up or down.

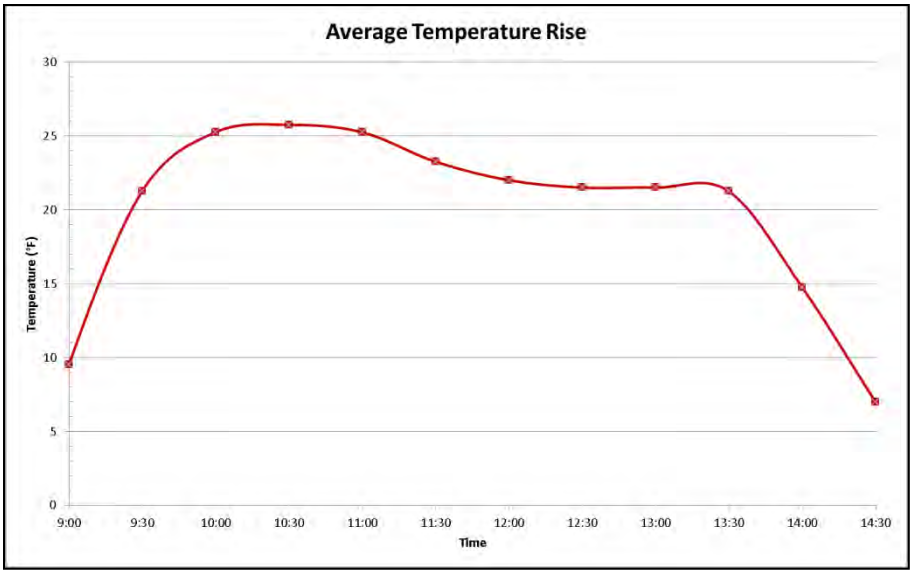

Figure 64: Temperature Rise inside Top of Drum

3.3. Pager Evaluation

The LRS pagers were evaluated for vibration intensity, usability and range. The vibration intensity was deemed good although the pager needs to be snug against the body to be effective when a person is actively working. A case sewn to a belt would transfer the vibrations to the body better than the belt clip provided. Also the pager must vibrate several times when activated to ensure the wearer notices. Usability was also good due to its compact size and simplicity. Standard pager range was marginal for WTIs application due to its variability. WTI testing showed ranges from 300 feet to 1000+ feet although after the manufacturer suggested tuning the pagers, average range for the tuned pagers was 800 to 1100+ feet. See section 2.6.3.4 for testing details.

Pager range is affected by several variables:

- Pager location on the user, e.g. back pocket, belt, hard hat,
- Obstructions between transmitter and pager,
- Pager sensitivity,
- Transmitter power setting and,
- Transmitter antenna location.

The pager should be located as high on the user as practical but also must be held snugly against the body for effectiveness. Line-of-sight (LOS) between the pager and transmitter provides the longest range but is not always possible in a work zone due to obstructions and body position. Pager sensitivity varies considerably between un-tuned pagers; requesting "tuned" pagers from the manufacturer assurers more uniform performance and maximum range. Transmitter power is typically adjustable and normally set to maximum so optimally antenna placement, as high as practical, provides the best pager range.

Pagers were given to maintenance workers and the CHP officer for evaluation; the project team also kept several pagers to evaluate. On June 19th the pagers were triggered at 12:18 PM while the project team was videotaping traffic. By aligning the time stamps of the pager log file, the

speed log file and the HD video, an image of the speeding vehicle was identified. Note the image matches the vehicle observed by the project team.

Utilizing the image from the HD video and overlaying applicable sections of the master's pager and speed logs, the image shown in Figure 65 was created. The image shows the vehicle, the pager trigger, the speed above 75 MPH, and the warning lights illuminated, confirming the WTI system's successful operation.

Pager Triggered	Speed Log
2012-06-19 12:18:17.220 PDT,1	2012-06-19 12:18:17.179 PDT,76
2012-06-19 12:18:17.583 PDT,1	2012-06-19 12:18:17.561 PDT,76
2012-06-19 12:18:17.973 PDT,1	2012-06-19 12:18:17.942 PDT,76
2012-06-19 12:18:18.354 PDT,1	2012-06-19 12:18:18.324 PDT,76
2012-06-19 12:18:18.734 PDT,1	2012-06-19 12:18:18.705 PDT,76
2012-06-19 12:18:19.113 PDT,1	2012-06-19 12:18:19.086 PDT,75
2012-06-19 12:18:19.493 PDT,1	2012-06-19 12:18:19.467 PDT,75
2012-06-19 12:18:19.874 PDT,1	2012-06-19 12:18:19.848 PDT,75
2012-06-19 12:18:20.254 PDT,1	2012-06-19 12:18:20.230 PDT,75
2012-06-19 12:18:20.657 PDT,1	2012-06-19 12:18:20.612 PDT,75

Figure 65: Frame Capture of Speeding Vehicle - WTI Image

3.4. Quick Disconnect Design

The quick-disconnect design is shown in Figure 66. The data cable (middle) utilizes DB9 D-sub connectors and the power cables use 2-pin SAE connectors. Not shown is the rubber O-rings twisted around the ears of the D-sub connectors to maintain the connection. Note unintentional testing in the field confirmed the base disconnects effectively.

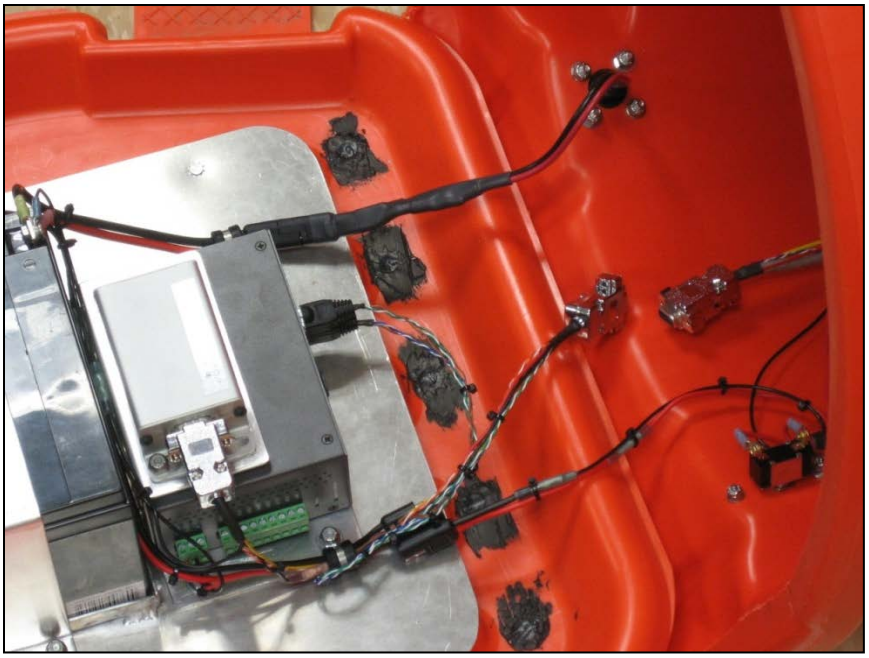

Figure 66: Quick Disconnect System – WTI Photo

3.5. Radar Range

During the course of testing the sDrum system in Los Banos, CA, a substantial variation was observed in a vehicles distance from the radar when the warning lights started flashing. After returning to Montana the sDrum system was taken to WTI's Transcend laboratory for more definitive range measurements. The Transcend Facility, in Lewistown, MT was selected as the testing location due to its size and the lack of public right-of-way issues.

Figure 67 shows the measurement setup at Transcend. The 30 cones in the foreground are spaced 10 feet apart and start 150 feet ahead of the radar in the master sDrum. In the background the master drum is lying down and has been opened with the bottom of the drum (black spot) facing the camera.

Figure 67: Radar Range Measurement Setup – Transcend

The measurement consisted of driving a 2011 Kia Optima parallel with the line of cones at a constant speed of 40 mph and measuring the distance from the vehicle to the radar when the drum lights started flashing. See Figure 68. The measurement was repeated five times and the average distance calculated.

The speed of the Kia was checked by the driver using a mobile phone with a GPS app. The GPS reported six feet accuracy throughout the tests which was deemed accurate enough for WTIs use. The Kia's speed was also periodically verified with a Falcon HR radar gun.

A video of the vehicle's position was recorded by a high definition video camera placed 300 feet before the radar and 400 feet perpendicular to the test area. The orientation provided an approximately 400 feet wide field of view. Three tall cones were used to mark the 150, 300, and 450 feet distances from the radar. Shorter cones were placed at 10 foot intervals between the taller cones but they turned out to be hidden by the tall grass in the video's foreground.

The radar was connected with a serial cable to a laptop running the Houston Radar software. The laptop screen was recorded using a high definition video camera. The serial cable connection avoided any latency issues with a wireless link.

Following field testing, the video footage was analyzed and individual clips of each measurement were created for each camera. Synchronization of the clips was enabled by a light near each camera, wired to a common switch and power source. The lights were manually flashed just before each test run. Synchronization was obtained by observing the light flash on each clip. The laptop clip was overlaid on the wide-angle clip for a picture-in-picture view. The picture-in-picture clip was then advanced frame by frame until the laptop displayed a speed then a screenshot was taken.

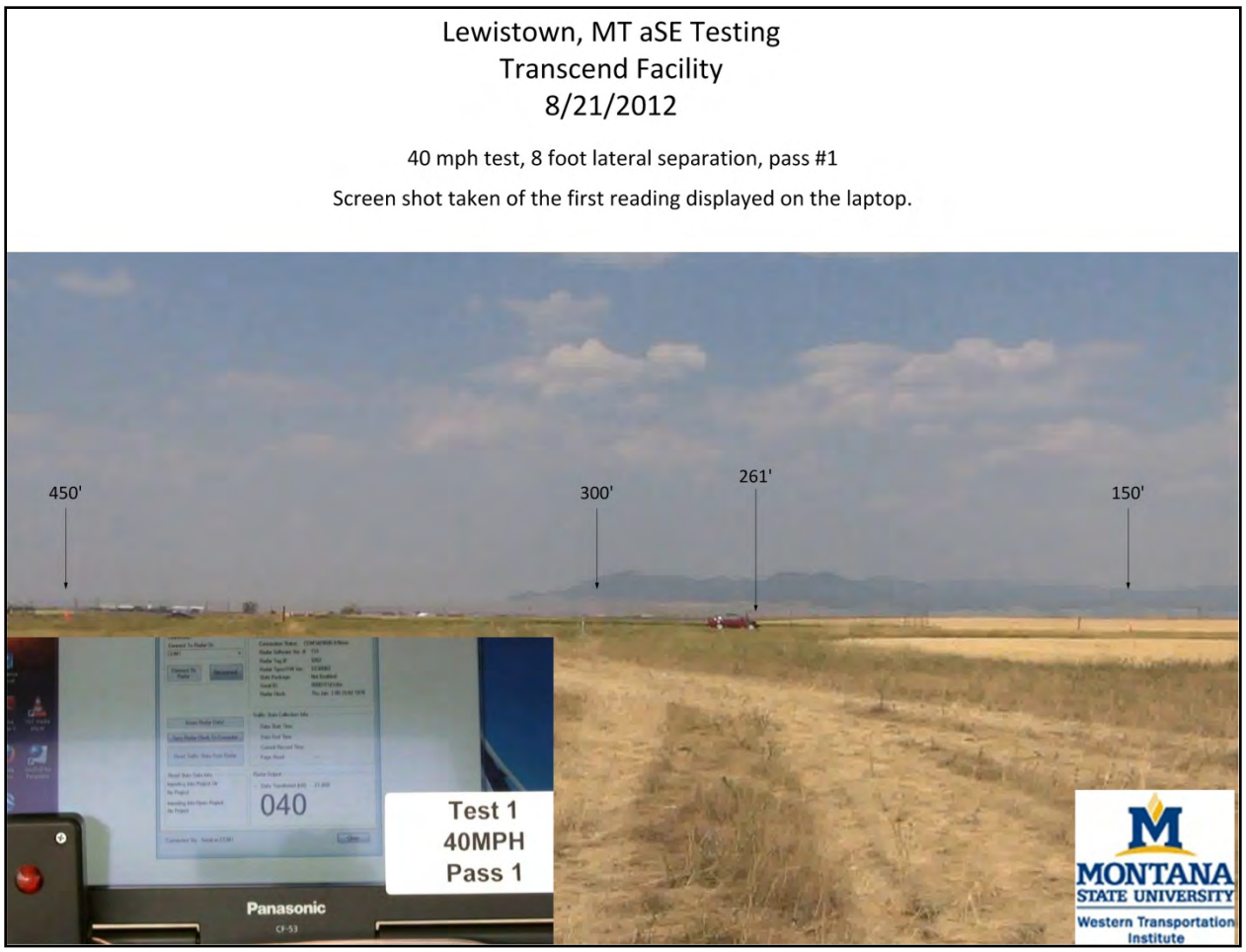

Figure 68: Radar Range Measurement Result

The clips were used to estimate vehicle's distance from the radar by scaling. Since the distance between tall cones is known to be 150 feet, the distance from the front of the vehicle to the nearest tall cone was calculated by on screen scaling. The average distance for each measurement was computed and added to the results diagram shown in Figure 69. The diagram shows the offsets effect on range by the radar's antenna pattern.

Range was measured at four lateral offsets from the radar beam's centerline - 8, 20, 32, and 44 feet. Eight feet was determined a safe, comfortable distance from the drums at 40 MPH. Since traffic lanes are typically 12 feet wide, twelve foot offsets were chosen to measure the radars range and speed accuracy for multiple traffic lanes.

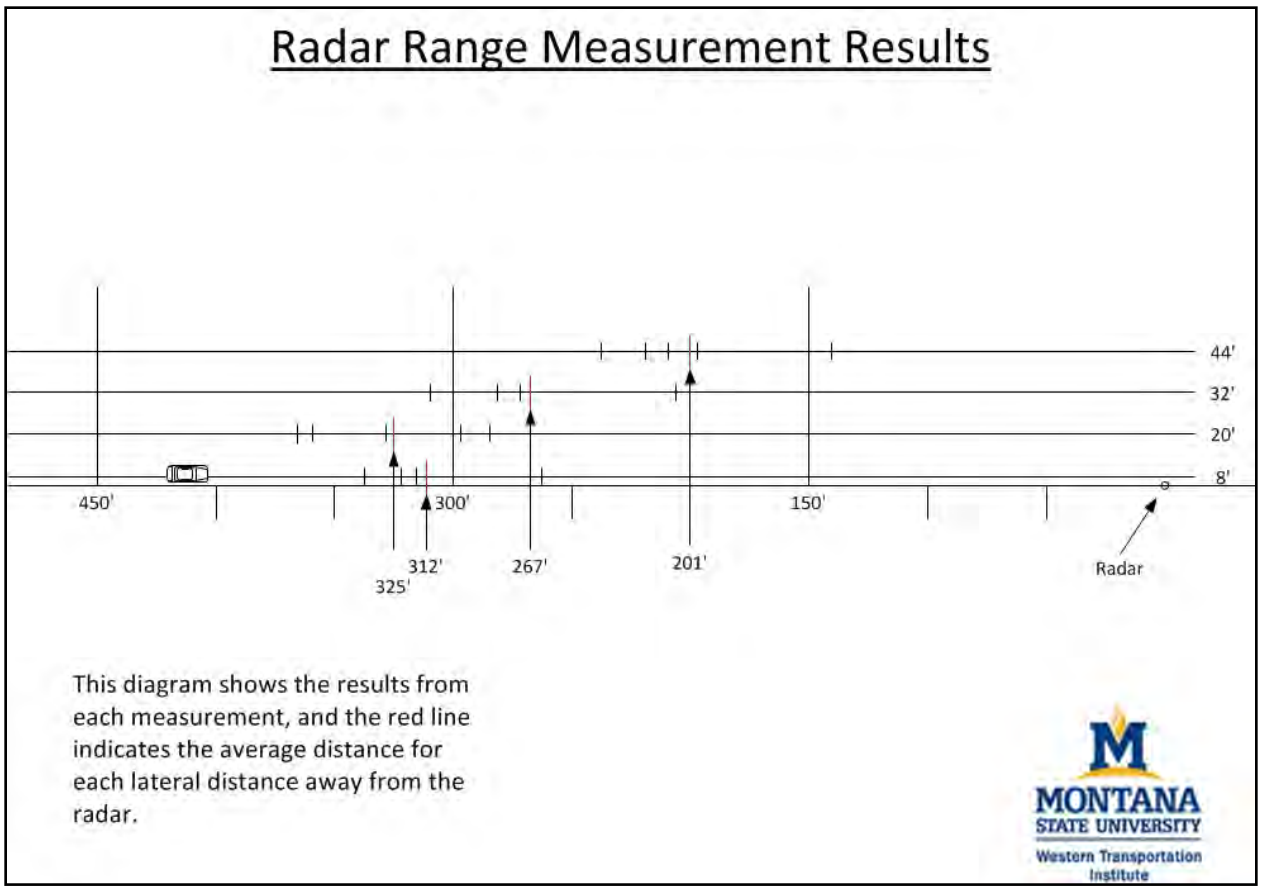

Figure 69: Radar Range Diagram

The measured speed stayed consistent from 39 to 41 MPH up to 44 feet offset where three of the five runs returned 37 MPH. The manufacturer confirmed that cosine effect (*43*) was the likely cause.

3.6. Light Pattern Tests

Following the Los Banos deployment time and personnel were available to research the radio networks ability to handle complicated light patterns. The following section documents WTIs research to determine the XBee Networks communication capability relative to complex light patterns; showing that latency is a significant issue even for relatively small networks.

3.6.1. Test Setups

Laboratory tests were setup with the lights arranged linearly in groups of five with spacing between the groups averaging five feet. See Figure 70. The tests were run utilizing a laptop with an XStick dongle located close enough to the light groups that all/nearly all XBee communication was direct, with little or no meshing. Note light number 1 is against the wall in the upper right corner of the image.

Figure 70: Laboratory Light Pattern Testing - WTI Photo

For outdoor tests the lights were setup linearly with 50 feet spacing. Tests were run using a laptop and an XStick dongle located near light number one. See Figure 71. Due to the large spacing between lights, the XStick only communicated with the first two or three lights, therefore primary communication between lights used mesh networking.

Figure 71: Outdoor Light Pattern Testing - WTI Photo

3.6.2. Procedure

Four light patterns were tested:

- Two light metronome (lights 1 and 10 alternately illuminating, similar to the operation of a metronome).
- Turn lights on sequentially with unicast packets then broadcast packets to turn all lights off.

- Light triplets forward (move a group of three illuminated lights down the line of lights).
- All lights on and off using broadcast packets.

A broadcast message is meant for all lights in the network and every light that receives the message repeats it a set number of times. A unicast message is sent from one light to another light based on the lights addresses (*44*). For any light pattern other than broadcast on and off, individual light addressing (unicast) is required. The lights can be configured to resend a unicast message if no acknowledge (ACK) is received. If this parameter is set and an ACK is not received within the default 200ms time delay, the message is resent.

Initial testing showed that slowing down the light pattern, i.e. adding delay between illuminations, improved pattern execution in most cases. As a result, delays ranging from 1000ms to 12ms were tested. The delays used for each pattern were dependent upon the complexity of the pattern. Each delay had 10 trials where each trial consisted of five loops of the pattern. Consequently each test pattern was repeated 50 times. An individual trial was considered successful if the pattern visually met the requirements of the pattern (lights illuminate in order and on time) for each of the 5 loops of the trial.

Note: Before any test of a light pattern was initiated, the pattern was executed once and not recorded. This preliminary pattern run was to allow the network to establish connections and routing tables required by the pattern for the test. This enabled more accurate results from the actual pattern test, rather than include data from generation of the network.

3.6.3. Results

The following charts show lab and outdoor success rates of various delays for the four light patterns tested. The main difference between the lab setup and the outdoor setup was the spacing between lights. Spacing outdoors was 50 feet where in the lab it was 5 feet or less.

An 80% success rate indicates 8 of the 10 trials ran successfully. An individual trial was considered successful if the pattern visually met the requirements of the pattern for <u>each</u> of the 5 loops of the trial.

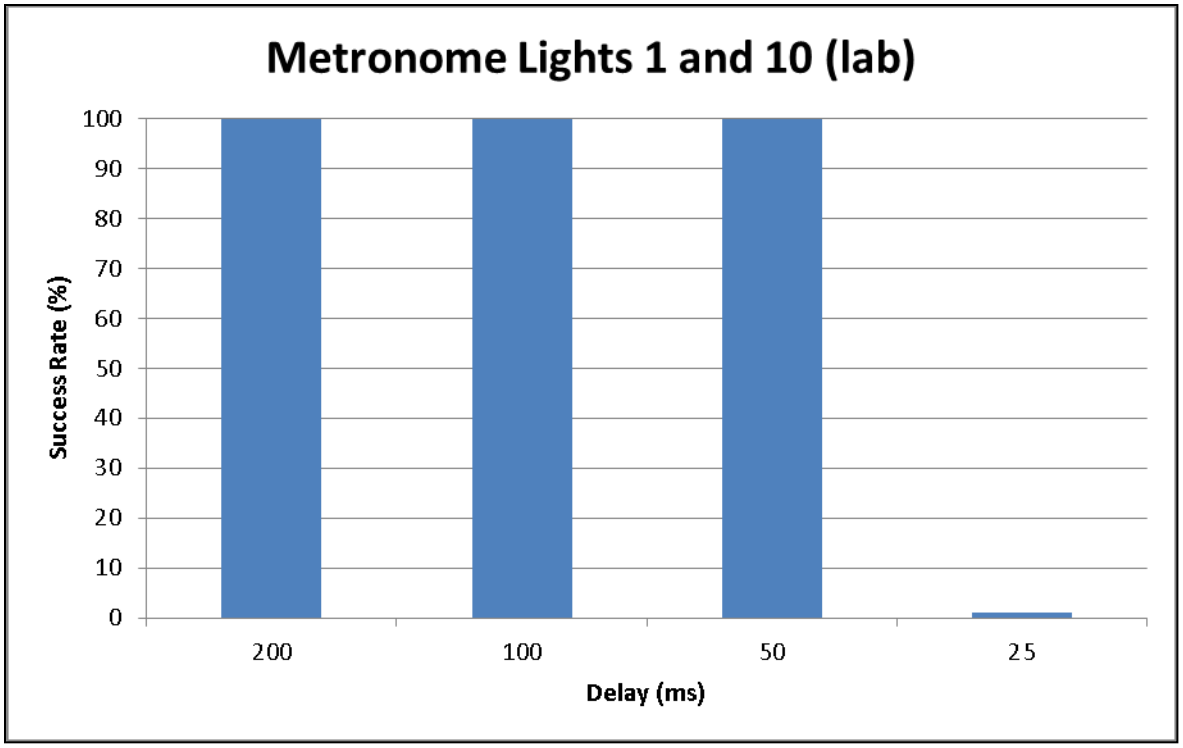

Figure 72: Laboratory Metronome Test Results

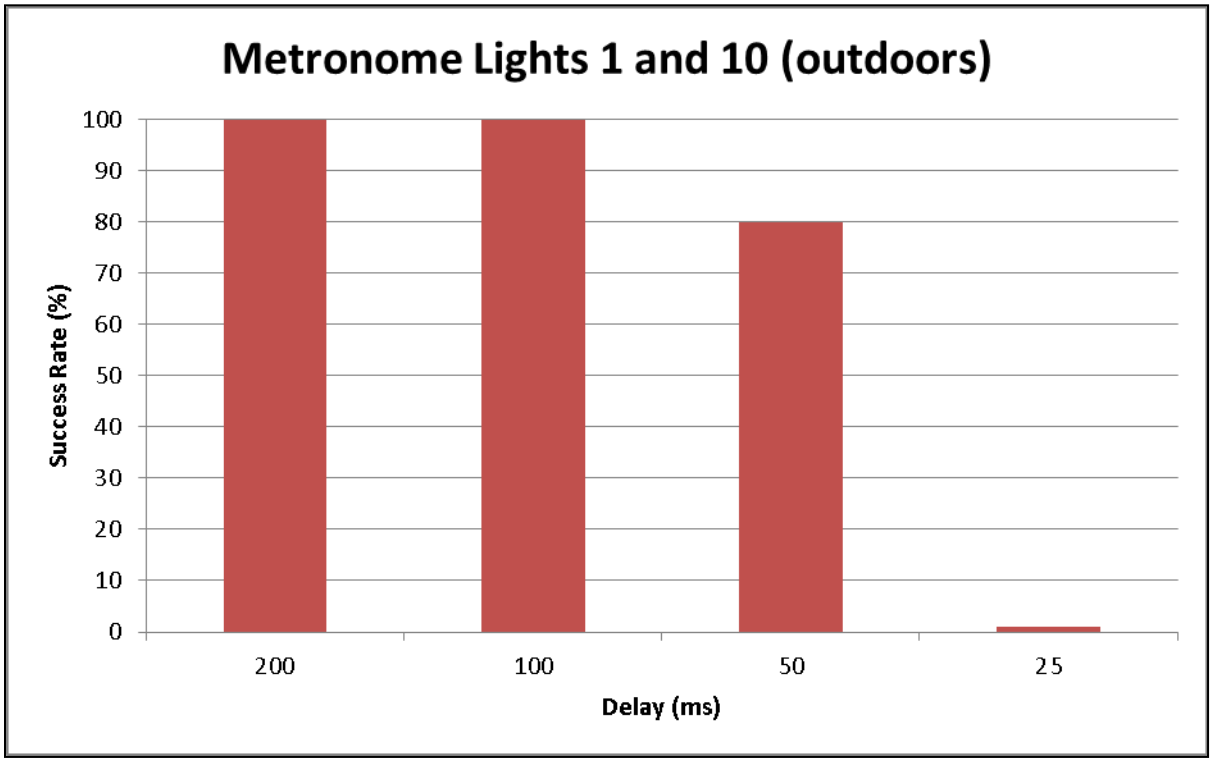

Figure 73: Outdoor Metronome Test Results

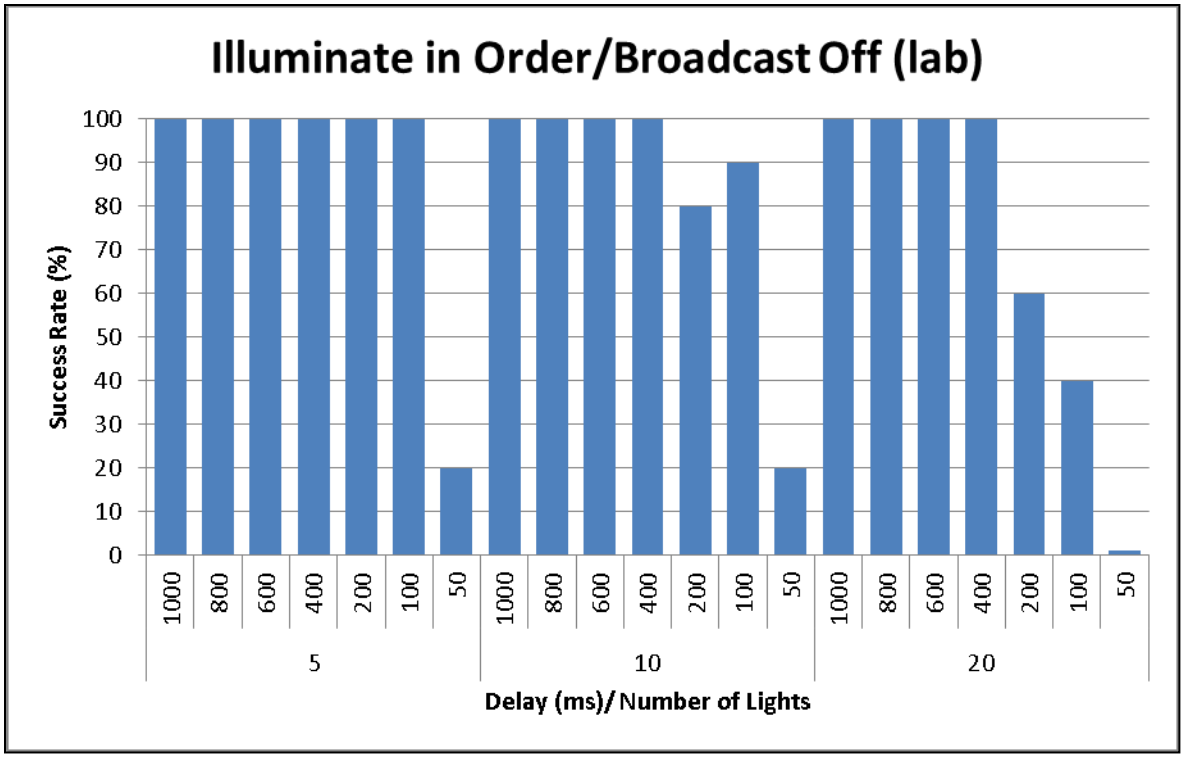

Figure 74: Laboratory Sequential Illumination Results

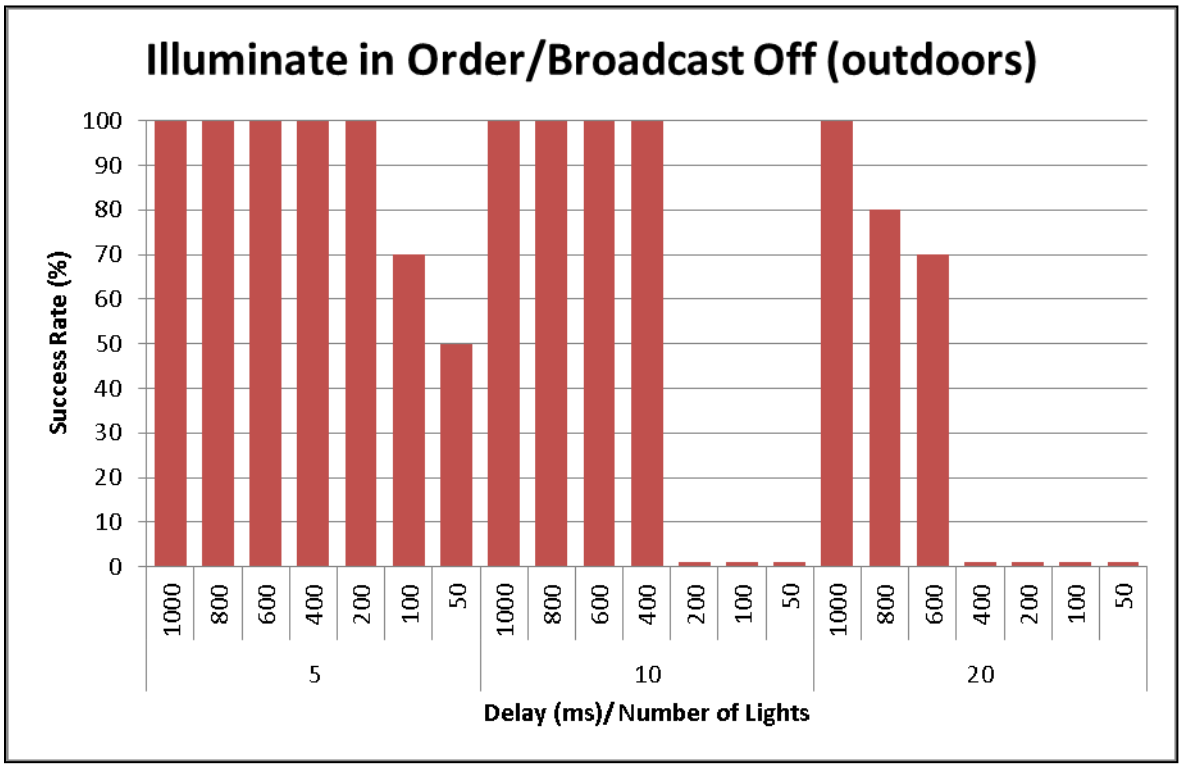

Figure 75: Outdoor Sequential Illumination Results

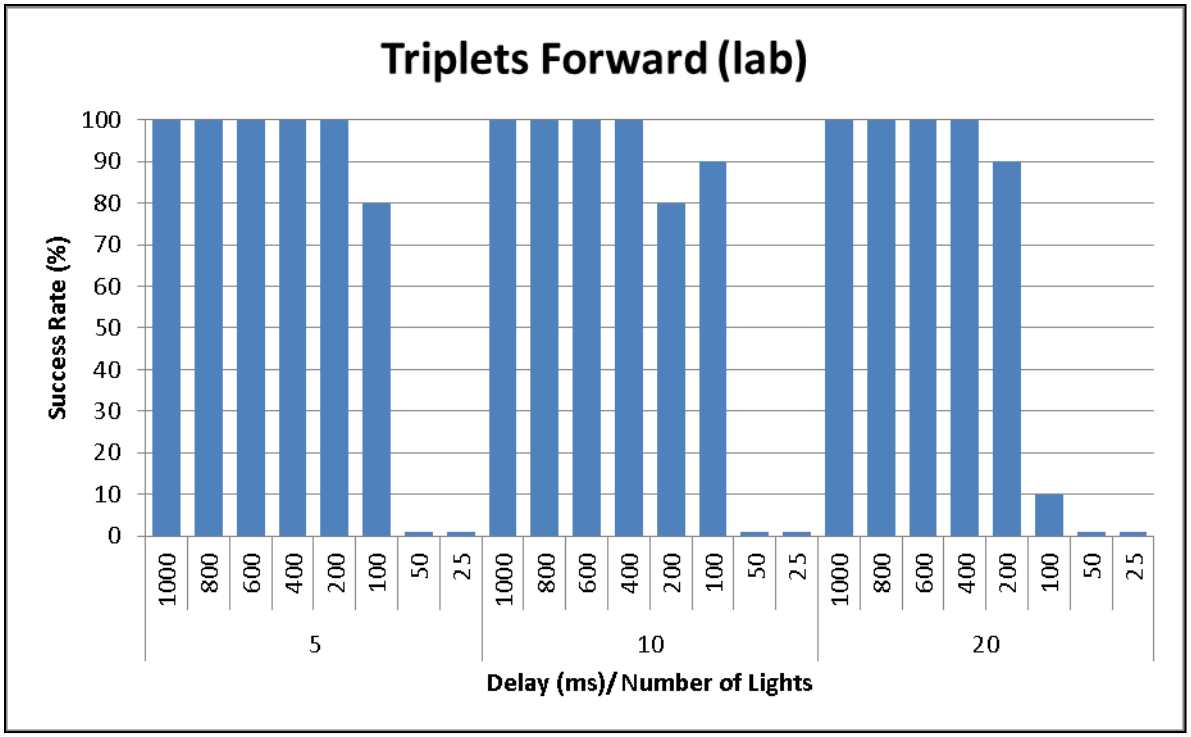

Figure 76: Laboratory Forward Triplets Results

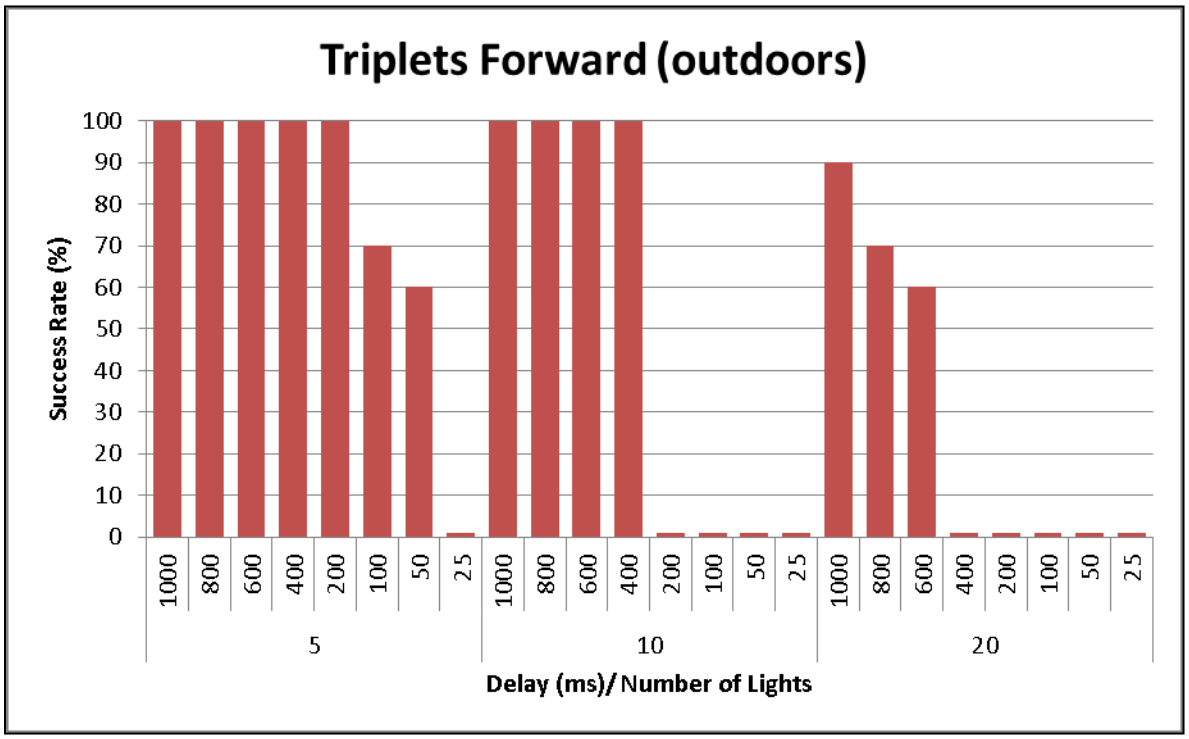

Figure 77: Outdoor Forward Triplets Results

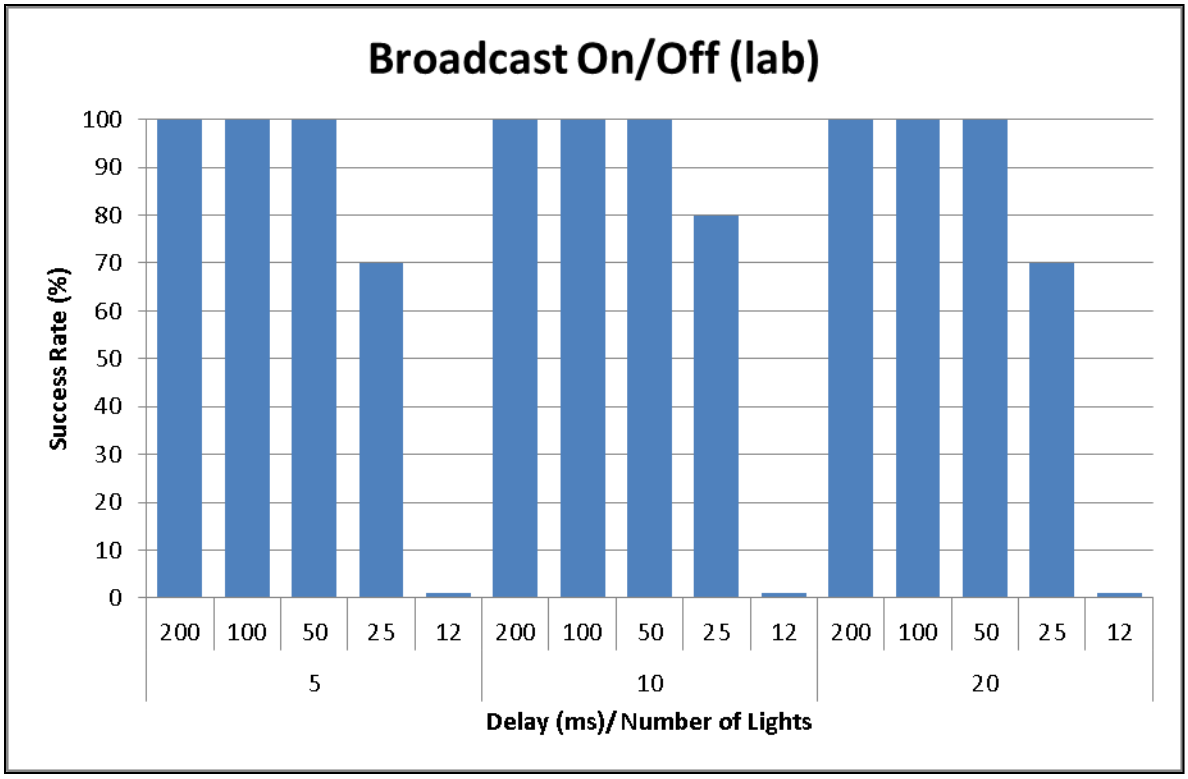

Figure 78: Laboratory Broadcast On/Off Results

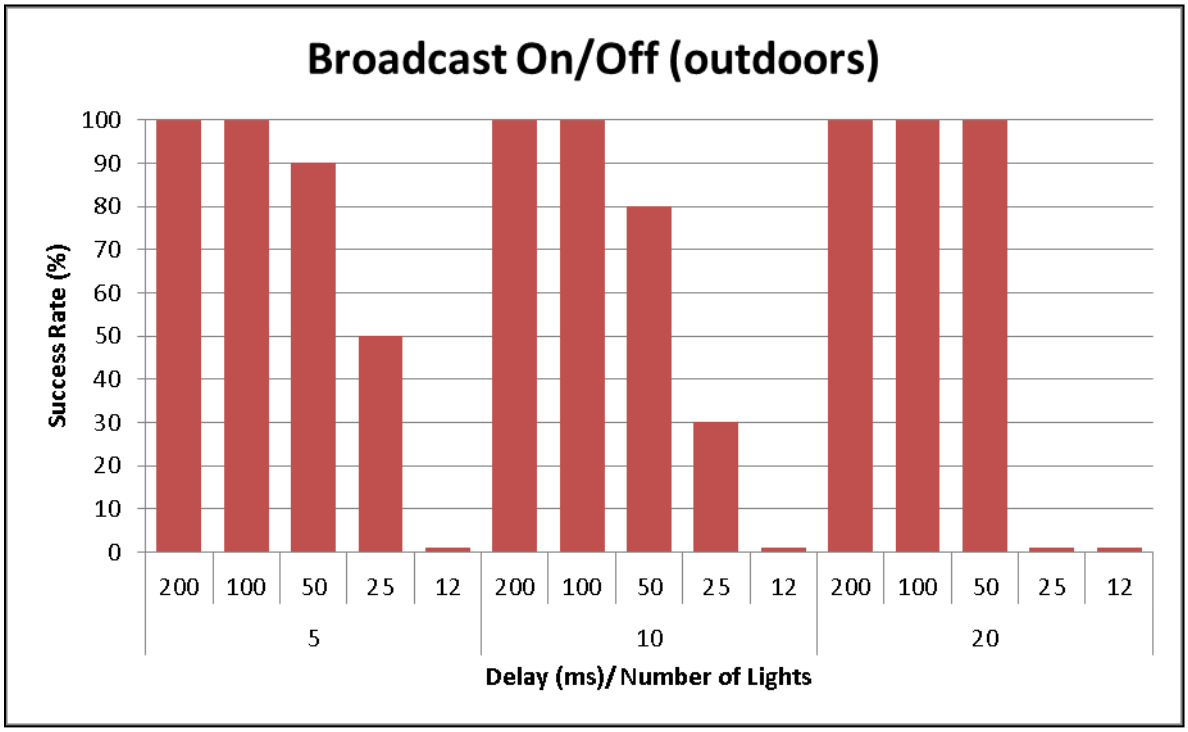

Figure 79: Outdoor Broadcast On/Off Results

3.6.4. Conclusion

While unicast packets are more versatile in the creation of lighting patterns, broadcast packets are far more reliable and can operate with significantly shorter delays. Of the unicast patterns, the less complex patterns run more consistently but only on small networks of 2 to 4 nodes where the delays were comparable to broadcast packets.

Broadcast patterns worked consistently at 50ms delays and only occasionally at 25ms. In comparison, unicast packet patterns were consistent at delays of 200ms or longer, with a few of the simpler patterns functioning with 80% or greater success rates with delays as short as 100ms. This means that patterns implemented with broadcast packets can run up to 4 times faster than unicast packets in addition to completing the patterns more consistently. Another interesting property of the broadcast packets is that their success rate did not diminish with an increase in the number of lights in the pattern although further testing would be needed to establish its limit.

Outdoor testing success rates were lower for all light patterns, but the severity varied greatly between broadcast patterns and unicast patterns. Outdoors the broadcast patterns had limited success with the delays that proved successful in the lab and unicast packets required up to 400 milliseconds more delay than the lab test to complete with marginal success rates. The exception to this was the 2-light metronome.

Finally there are similarities between the outdoor and the lab test results as well. In both the outdoor and lab results, lighting pattern quality decreased significantly with the size of the XBee network. In addition, shorter delays caused the number of successful patterns to diminish. This particular factor had a greater effect on the outdoor XBee network than the lab network. A possible explanation could be that the mesh network delays the receipt of the packet by the XBee; consequently there must be longer delays for successful lighting patterns with mesh networks.

3.7. Tire Ring

On the third day of deployment the 40+ pound drums started to move when winds started gusting to 20 MPH. Large trucks speeding by the drums caused them to rock and slowly move with the wind; fortunately they were positioned away from traffic. Over a couple hours a few drums had moved several feet so a tire ring was placed on the drum which stopped the movement. See Figure 80.

Figure 80: Tire Ring Weight

The tire rings stopped the drum drift but created a big headache for deployment and retrieval. Significant extra time and labor is involved when using the tire rings. Unlike typically deployed barricade drums, sDrums must be deployed and retrieved daily to avoid theft or vandalism.

4. SPEED EVALUATION

The WTI system does appear to have an impact on driver behavior as demonstrated by reduced average speeds and reduced percentages of radar reads of vehicle speeds greater than or equal to 60 mph at affected locations in the work zone. For instance, when the WTI system alone was present, there was a decrease in overall average speed of as much as 1.7 mph; and, when both systems were present, there was a decrease of approximately 2.4 mph in the areas affected by both systems. When the WTI system alone was present, approximately 25% of vehicles entering the affected area at 60 mph or above reduced their speed to below 60 mph within this same area, and even more (40%) did the same when both systems were in place. For the baseline, there was only a 10% reduction in this portion of the work zone. Where differences in the percentages are statistically significant and in portions of the work zone affected by both systems, the indication is that the configurations consisting of both systems, the PATH system alone, and the WTI system alone all showed improvement, demonstrated by reduced percentages of speeds 60 mph or greater over the baseline consisting of neither system (no treatment). This is consistent with our general hypothesis regarding the expected impact of these systems.

There are also statistically significant differences in the percentages at locations preceding the systems, which indicate that other factors should be considered in order to make valid comparisons and conclusions, since these locations would not have been influenced by either of the systems. And, there are apparent reductions in speed during baseline weeks at the end of the work zone, which indicates that other factors are involved. For instance, the location of the CHP vehicle was sometimes at the beginning of the taper in the work zone and at other times at the end of the work zone during times in which the WTI system was in operation. The work zone itself was not in the same location throughout the evaluation period. Proximity to Los Banos, traffic to and from side roads and variation in the placement of the iCones also may have contributed general variability and specific differences between rates. As such, engineering judgment will be critical prior to deploying these systems, and further study is recommended.

Further detail may be found in the separate, detailed speed evaluation document entitled, “aSE Speed Data Evaluation for the Western Transportation Institute System.”

5. CONCLUSIONS

Real world testing near Los Banos, California proved the WTI and PATH systems can operate together or solo. The WTI sDrum system functioned as designed without any issues but had shorter than optimal pager range. It also showed the full WTI sDrum system is labor intensive to deploy which would need to be addressed before the system would be commercially viable.

The WTI sDrum system successfully detects speeding vehicles and flashes warning lights to warn the speeding driver and the work zone workers. The pager system also warns work zone workers when a vehicle is speeding excessively.

Speeding drivers responded to the flashing lights as shown by brake lights that were observed by the project team when the warning lights started flashing. The brake lights may have been an indication that the drivers had not been aware that they were speeding or that they just realized someone was monitoring their speed; either way they slowed down.

6. RECOMMENDATIONS

The following items are recommended for further research:

- Further research of light patterns
- Research of light pattern effectiveness.
- Research radio options for extended drum spacing or drum sets.
- Research radios and protocols for implementing complex light patterns.
- Research improving radar range.
- Enhance configuration and control software.
- Research the minimum number of drums and spacing required to be effective.
- Research spacing of drum sets (e.g. 4 drum sets at ¼ mi spacing).
- Research component alternatives to reduce cost and improve performance.
- Research custom designed paging system for transportation use.

The research tasks listed would expand and enhance the performance of the sDrum system and potentially reduce procurement and maintenance costs.

7. APPENDIX A

7.1. Prototype Frame Drawing

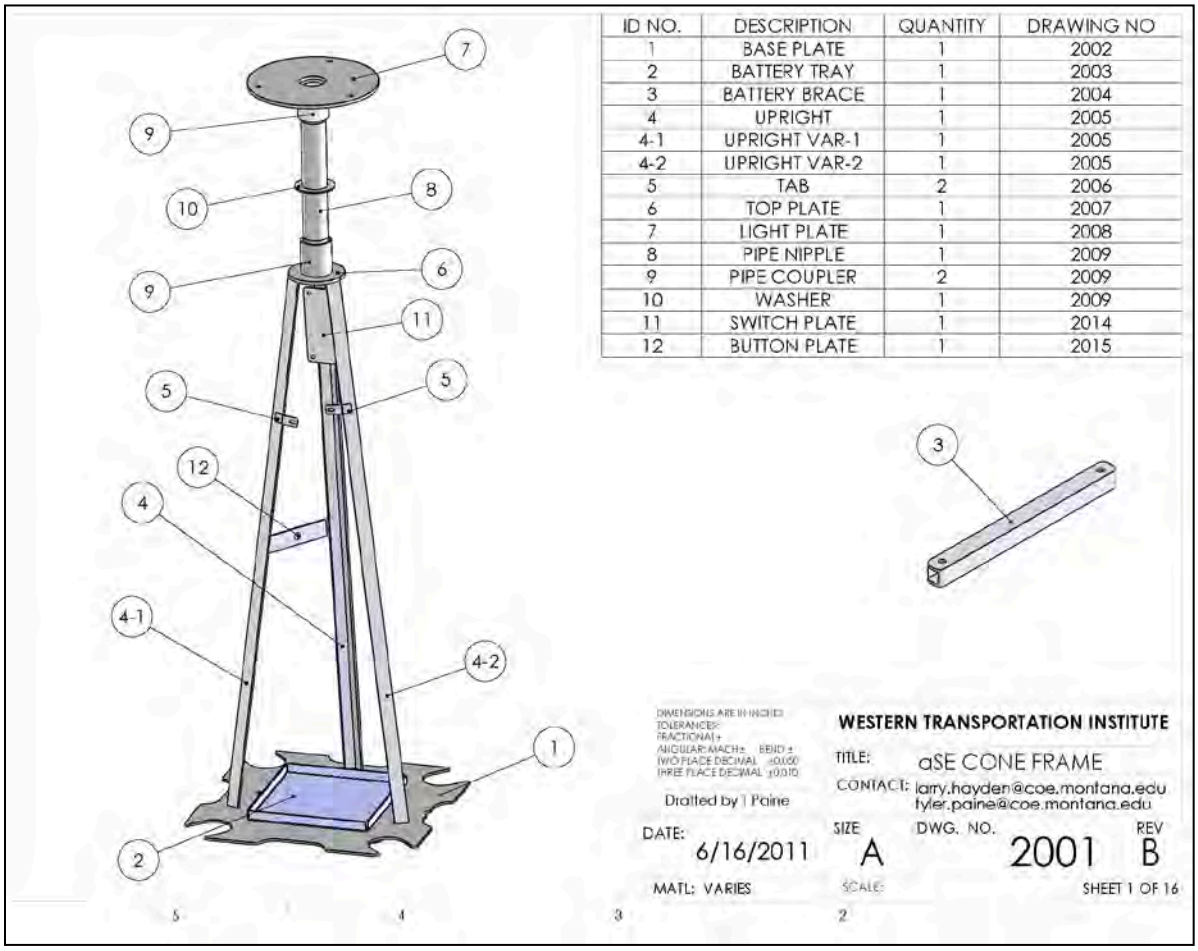

ID NO.	DESCRIPTION	QUANTITY	DRAWING NO
1	BASE PLATE	1	2002
2	BATTERY TRAY	1	2003
3	BATTERY BRACE	1	2004
4	UPRIGHT	1	2005
4-1	UPRIGHT VAR-1	1	2005
4-2	UPRIGHT VAR-2	1	2005
5	TAB	2	2006
6	TOP PLATE	1	2007
7	LIGHT PLATE	1	2008
8	PIPE NIPPLE	1	2009
9	PIPE COUPLER	2	2009
10	WASHER	1	2009
11	SWITCH PLATE	1	2014
12	BUTTON PLATE	1	2015

Figure 81: sCone Frame Drawing

7.2. Tool Drawing

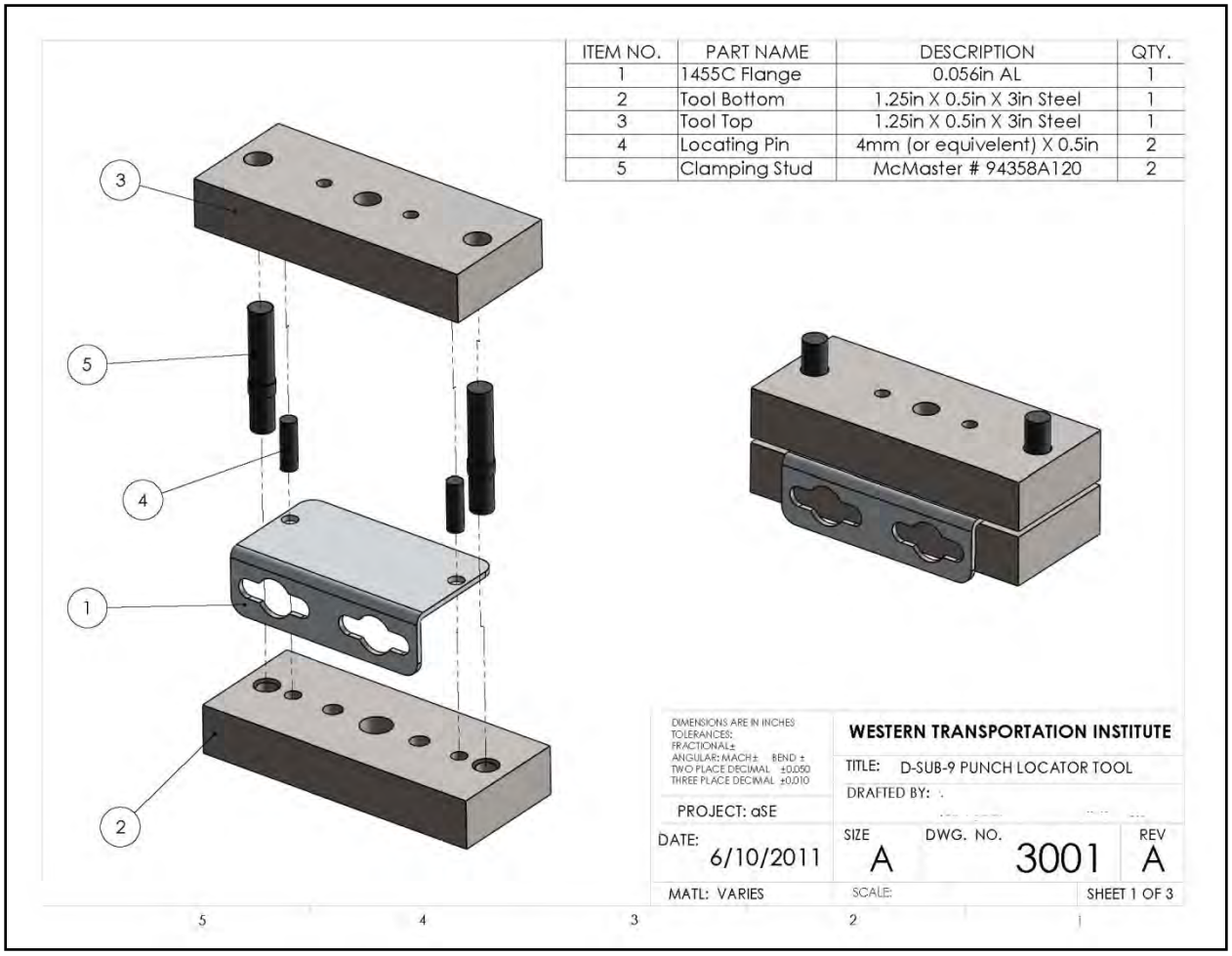

Figure 82: D-Sub-9 Punch Locator Tool

7.3. D-Sub Punch

Figure 83: DB9 D-Sub Punch - Image Courtesy of Challenge Tool

8. APPENDIX B

8.1. Bill of Materials

Table 13: Light Switch BOM - Part 1

Part	Value	Device	Package	Description	Manufacturer	Part #	Source
D1	1N4148	Diode	DO35-10	thru hole	Various	1N4148TACT	Digi-Key Corp.
D2	1N4148	Diode	DO35-10	axial lead	Various	1N4148TACT	Digi-Key Corp.
D3	1N4001	Diode	DO41-10	axial lead	Various	1N4001DICT	Digi-Key Corp.
D4	1N4001	Diode	DO41-10	axial lead	Various	1N4001DICT	Digi-Key Corp.
D5	1N4001	Diode	DO41-10	axial lead	Various	1N4001DICT	Digi-Key Corp.
D6	1N4001	Diode	DO41-10	axial lead	Various	1N4001DICT	Digi-Key Corp.
D7	1N4001	Diode	DO41-10	axial lead	Various	1N4001DICT	Digi-Key Corp.
D8	1N4001	Diode	DO41-10	axial lead	Various	1N4001DICT	Digi-Key Corp.
D9	1N4001	Diode	DO41-10	axial lead	Various	1N4001DICT	Digi-Key Corp.
D10	1N4001	Diode	DO41-10	axial lead	Various	1N4001DICT	Digi-Key Corp.
D11	1N4001	Diode	DO41-10	axial lead	Various	1N4001DICT	Digi-Key Corp.
D12	Not used	Diode	DO41-10	axial lead	---	---	---
D13	Not used	Diode	DO41-10	axial lead	---	---	---
Q1	IRF510	transistor	TO220AB	thru hole	Fairchild Semi	IRF510PBF	Digi-Key Corp.
Q2	IRF510	transistor	TO220AB	thru hole	Fairchild Semi	IRF510PBF	Digi-Key Corp.
R1	Not used	Resistor	0207/10	---	---	---	---
R2	1M ¼W 5% carbon	Resistor	0207/10	axial lead	Various	CF14JT1M00CT	Digi-Key Corp.
R3	Not used	Resistor	0207/10	---	---	---	---
R4	1M ¼W 5% carbon	Resistor	0207/10	axial leads	Various	CF14JT1M00CT	Digi-Key Corp.
X1	DB9F	Connector	F09HP	rt angle DB9 female	SPC / TE Connectivity	SPC15457 / 1734354-1	Newark/Digi-Key
PCB	NA	PCB	NA	1.97”x 3.15”	PCB Fab Express		PCB Fab Express
ENC	NA	Enclosure	NA	extruded aluminum	Hammond Manuf.	1455C801	Gerber Electronics

Table 14: Light Switch BOM - Part 2

Part	Value	Device	Package	Description	Manufacturer	Part #	Source
PNL	NA	Flanged End Panels	NA	formed aluminum	Hammond Manuf.	1455CF	Gerber Electronics
TL	NA	Punch	NA	DB9 Punch	Challenge Tool	MK-9P	Challenge Tool

Table 15: Master Drum BOM – Part 1

ITEM NO.	ITEM ASSY	SUB ASSY	DRAWING NUMBER	DESCRIPTION	QNTY EACH	VENDOR	VENDOR PART NUMBER
1	Base			Standard Base	1	TrafFix Devices, Inc	N/A
2				0.5" Metal Plug	10	McMaster-Carr	9563K43
3				Black Silicone Adhesive Sealant (oz)	1	Fastenal	233650
4			aSE10001	Base Plate	1	Excel Machine	N/A
5			aSE10005	L & R Bracket	2	Excel Machine	N/A
6			aSE10002	Battery Tray	1	Excel Machine	N/A
7				Battery Abrasion Pad (sq in)	44	O'Reilly Auto Parts	1851
8			aSE10003	Battery Strap	1	Excel Machine	N/A
9				Battery Strap Abrasion Pad (in)	13	McMaster-Carr	93625K229
10				Werker 12V 26Ah AGM Battery	1	Batteries Plus	WKA12-26NB
11			aSE10004	Moxa & Light Switch Bracket	1	Excel Machine	N/A
12				Light Switch	1	WTI	N/A
13				Moxa Computer W/4 Serial Ports	1	Neutron, Inc	476045
15				3/8" Rubber Cushioned Loop Clamp	3	O'Reilly Auto Parts	85605
16				#10-32 HFH SS Stud	14	D.B. Roberts, Inc	PEMHFH-032-8ZI
17				#10-32 x .375 Phillips Pan Head SS Machine Screw	4	Fastenal	1172450
18				#10-32 SS Nyloc Nut	18	Fastenal	1170858
19				#10 Flat SS Washer 0.5" OD	14	Fastenal	1171xxx
20				3mm lock Washer	6	Fastenal	WE6330000A200 00
21				3mm x 6mm Phillips Pan Head SS Machine Screw	6	Fastenal	175114

Table 16: Master Drum BOM - Part 2

ITEM NO.	ITEM ASSY	SUB ASSY	DRAWING NUMBER	DESCRIPTION	QNTY EACH	VENDOR	VENDOR PART NUMBER
22	Drum			LDPE Drum	1	TrafFix Devices, Inc	18000
23		Light		L22 Amber Warning Light	1	Vehicle Lighting Solutions, Inc	L22HAP
24				6.25" DIA. Gasket (sq. in.)	31	O'Reilly Auto Parts	1851
25			aSE20001	UHMW-PE Light Wedge	1	Excel Machine	N/A
26			aSE20002	UHMW-PE Light Backing Plate	1	Excel Machine	N/A
27				Receptacle 2 Position Mate-N-Lok	1	Digi-Key	A25756-ND
28				Pin 14-20 AWG Crimp	2	Digi-Key	A100718CT-ND
29				#10-32 x 1.5 Phillips Pan Head SS Machine Screw	1	Fastenal	72554
30				#10-32 x 1.25 Phillips Pan Head SS Machine Screw	2	Fastenal	72537
31				3/8" Rubber Cushioned Loop Clamp	1	O'Reilly Auto Parts	85605
32				#10 Flat SS Fender Washer	3	Fastenal	1171209
33				#10-32 SS Nyloc Nut	3	Fastenal	1170858
34		Radar	aSE20004	Radar Bracket	1	WTI	N/A
35				SS300 Weatherproof Radar	1	Vipin Malic	SS300
36				Molex 5-pin housing	1	Digi-Key	WM2903-ND
37				Socket 22-24 AWG crimp	5	Digi-Key	WM2573CT-ND
38				#10-32 x .75 Phillips Pan Head SS Machine Screw	4	Fastenal	1172534
39				#10-32 SS Nyloc Nut	4	Fastenal	1170858
40				#10 Flat SS Washer - Large OD	4	Fastenal	1171010
41				3/8" Rubber Cushioned Loop Clamp	1	O'Reilly Auto Parts	85605
42				#2-56 x .125 Phillips Pan Head SS Machine Screw	4	Fastenal	175372
44		Radio	aSE20003	Radio Bracket	1	Excel Machine	N/A
45				ZigBee Radio	1	Mouser Electronics	888-XA-A14-CS2P
46				#6-32 x .75 Phillips Pan Head SS Machine Screw	2	Fastenal	1172388
47				#6-32 SS Nyloc Nut	2	Fastenal	1170855
48				#6-32 Flat Washer	4	Fastenal	1171006
49				3/8" Rubber Cushioned Loop Clamp	1	O'Reilly Auto Parts	85605

Table 17: Master Drum BOM - Part 3

ITEM NO.	ITEM ASSY	SUB ASSY	DRAWING NUMBER	DESCRIPTION	QNTY EACH	VENDOR	VENDOR PART NUMBER
50		Charge Port		SAE 2-Pin Surface Mount Battery Charging Port	1	Solar Capitalist, LLC	SAE 2-Pin Surface Mount
51				SAE 2-Pin Connector - 10 AWG	2	All Electronics	CON-321
52				ATC Fuse Holder 10GA	1	the electrical depot	FHAC-02
53				10 Amp Blade Fuse	1	amazon.com	VP/ATC-10
54				#10-32 x 0.5" Phillips Pan Head SS Machine Screw	4	Fastenal	1172515
55				#10 Flat SS Washer - Large OD	4	Fastenal	1171010
56				#10-32 SS Nyloc Nut	4	Fastenal	1170858
57		Power		SPST Toggle Switch	1	ElecDirect	5520
58				Walled Faceplate Switch Guard	1	ElecDirect	82465
59				Toggle Switch Boot - Open End	1	ElecDirect	765003
60				ATC Fuse Holder 14GA	1	the electrical depot	FHAC-01
61				1 Amp Blade Fuse	1	Allied	740-1996
62				1/2" Nylon Flat Washer	1	Fastenal	11103167
63				3/8" Rubber Cushioned Loop Clamp	1	O'Reilly Auto Parts	85605
64				#6-32 x 0.5" Phillips Pan Head SS Machine Screw	2	Fastenal	1172516
65				#6-32 SS Nyloc Nut	2	Fastenal	1170855
66				#6 Flat SS Washer	2	Fastenal	1171006
67				Plasti-Dip - Black	0.05	Owenhouse	13275
68		Config. Port		RJ45 Receptacle w/cover IP67	1	Digi-Key	626-1461-ND
69	W/H			3/8" Rubber Cushioned Loop Clamp	4	O'Reilly Auto Parts	85605
70				#10-32 x 0.5" Phillips Pan Head SS Machine Screw	2	Fastenal	1172515
71				#10-32 SS Nyloc Nut	2	Fastenal	1170858
72				#10 Flat SS Washer - Large OD	2	Fastenal	1171010
73				SAE 2-Pin Connector - 14 AWG	1	All Electronics	CON-319
74				D-Sub 9-pin Connector Housing	4	SteinAir	SA-1020
75				9-pin Male D-Sub	2	SteinAir	SA-1011
76				9-pin Female D-Sub	2	SteinAir	SA-1012
77				Contact Standard D-Sub Socket	14	SteinAir	SA-1017

Table 18: Master Drum BOM - Part 4

ITEM NO.	ITEM ASSY	SUB ASSY	DRAWING NUMBER	DESCRIPTION	QNTY EACH	VENDOR	VENDOR PART NUMBER
78				Contact Standard D-Sub Pin	14	SteinAir	SA-1018
79				RJ45 Connector	4	Firefold	100010B
80				Light Plug 2 Position Mate-N-Lok	1	Digi-Key	A25757-ND
81				Socket 14-20 AWG crimp	2	Digi-Key	A100715CT-ND
82				Molex 5-pin plug	1	Digi-Key	WM2536-ND
83				Pin 22-24 AWG crimp	5	Digi-Key	WM2515-ND
84				Connector PowerPlug - Coaxial	1	Digi-Key	SC1052-ND
86				#6 22/18 AWG Ring Terminal	1	Fastenal	58598
87				22/18 AWG Sealed Butt Connector	1	Fastenal	58591
88				#10 16/14 AWG Ring Terminal	2	Fastenal	58604
89				#6 16/14 Ring Terminal	1	Fastenal	58602
90				16/14 AWG Sealed Butt Connector	6	Fastenal	58590
91				#10 12/10 AWG Ring Terminal	2	Fastenal	58607
92				12/10 AWG Sealed Butt Connector	3	Fastenal	58589
93				16 AWG Tefzel Wire BLACK (in)	59	Sky Geek	M22759-16-16-0
94				16 AWG Tefzel Wire RED (in)	32	Sky Geek	M22759-16-16-2
95				20 AWG Tefzel Wire BLACK (in)	24	Sky Geek	M22759-16-20-0
96				20 AWG Tefzel Wire RED (in)	72	Sky Geek	M22759-16-20-2
97				20 AWG Tefzel Wire YELLOW (in)	68	Sky Geek	M22759-16-20-4
98				22 AWG Tefzel Wire BLACK (in)	64.5	Sky Geek	M22759-16-22-0
99				22 AWG Tefzel Wire RED (in)	35.5	Sky Geek	M22759-16-22-2
101				24 AWG CAT-5e Ethernet (in)	64	Digi-Key	AE10601-ND
102				1/8" Heat Shrink Tubing (in)	18	Digi-Key	DWP018K-ND
103				1/4" Heat Shrink Tubing (in)	24	Digi-Key	Q2F3X014B-100-ND
104				4" Cable Ties - Black	31	Fastenal	63122
105	MISC			SanDisk 1GB SD Memory Card	1	Amazon	SDSDB-1024-E10

Table 19: Master Drum BOM - Part 5

ITEM NO.	ITEM ASSY	SUB ASSY	DRAWING NUMBER	DESCRIPTION	QNTY EACH	VENDOR	VENDOR PART NUMBER
106				20# Tire Ring	1	TrafFix Devices, Inc	Tire Ring
107				Sealant between wedge & drum (oz.)	1	bestbuyautoequipment.com	LOC37523
108				XStick 2.4 GHz USB to XBee	1	Digi-Key	602-1200-ND

Table 20: Slave Drum BOM – Part 1

ITEM NO.	ITEM ASSY	SUB ASSY	DRAWING NUMBER	DESCRIPTION	QNTY EACH	VENDOR	VENDOR PART NUMBER
1	Base			Standard Base	1	TrafFix Devices, Inc	N/A
2				0.5" Metal Plug	10	McMaster-Carr	9563K64
3				Black Silicone Adhesive Sealant (oz.)	1	Fastenal	233650
4			aSE10001	Base Plate	1	Excel Machine	N/A
5			aSE10005	L & R Bracket	2	Excel Machine	N/A
6			aSE10002	Battery Tray	1	Excel Machine	N/A
7				Battery Abrasion Pad (sq. in.)	44	O'Reilly Auto Parts	1851
8			aSE10003	Battery Strap	1	Excel Machine	N/A
9				Battery Strap Abrasion Pad (in)	13	McMaster-Carr	93625K229
10				Werker 12V 26Ah AGM Battery	1	Batteries Plus	WKA12-26NB
11				Light Switch	1	WTI	N/A
12				3/8" Rubber Cushioned Loop Clamp	2	O'Reilly Auto Parts	85605
13				#10-32 HFH SS Stud	16	D.B. Roberts, Inc	PEMHFH-032-8ZI
14				#10-32 SS Nyloc Nut	16	Fastenal	1170858
15				#10 Flat SS Washer 0.5" OD	16	Fastenal	1171xxx
16	Drum			LDPE Drum	1	TrafFix Devices, Inc	18000
17		Light		L22 Amber Warning Light	1	Vehicle Lighting Solutions, Inc	L22HAP
18				6.25" DIA. Gasket	31	O'Reilly Auto Parts	1851
19			aSE20001	UHMW-PE Light Wedge	1	Excel Machine	N/A
20			aSE20002	Light Backing Plate	1	Excel Machine	N/A
21				Receptacle 2 Position Mate-N-Lok	1	Digi-Key	A25756-ND
22				Pin 14-20 AWG Crimp	2	Digi-Key	A100718CT-ND

Table 21: Slave Drum BOM - Part 2

ITEM NO.	ITEM ASSY	SUB ASSY	DRAWING NUMBER	DESCRIPTION	QNTY EACH	VENDOR	VENDOR PART NUMBER
23				#10-32 x 1.5 Phillips Pan Head SS Machine Screw	1	Fastenal	72554
24				#10-32 x 1.25 Phillips Pan Head SS Machine Screw	2	Fastenal	72537
25				3/8" Rubber Cushioned Loop Clamp	1	O'Reilly Auto Parts	85605
26				#10 Flat SS Fender Washer	3	Fastenal	1171209
27				#10-32 SS Nyloc Nut	3	Fastenal	1170858
28		Radio	aSE20003	Radio Bracket	1	Excel Machine	N/A
29				ZigBee Radio	1	Mouser Electronics	888-XA-A14-CS2P
30				#6-32 x .75 Phillips Pan Head SS Machine Screw	2	Fastenal	1172388
31				#6-32 SS Nyloc Nut	2	Fastenal	1170855
32				#6-32 Flat SS Washer	4	Fastenal	1171006
33				3/8" Rubber Cushioned Loop Clamp	1	O'Reilly Auto Parts	85605
34		Charge		SAE 2-Pin Surface Mount Battery Charging Port	1	Solar Capitalist, LLC	SAE 2-Pin Surface Mnt
35				SAE 2-Pin Connector - 10 AWG	1	All Electronics	CON-321
36				#10-32 x 0.5" Phillips Pan Head SS Machine Screw	4	Fastenal	1172515
37				#10 Flat SS Washer - Large OD	4	Fastenal	1171010
38				#10-32 SS Nyloc Nut	4	Fastenal	1170858
39		Power		SPST Toggle Switch	1	ElecDirect	5520
40				Walled Faceplate Switch Guard	1	ElecDirect	82465
41				Toggle Switch Boot - Open End	1	ElecDirect	765003
42				1/2" Nylon Flat Washer	1	Fastenal	11103167
43				3/8" Rubber Cushioned Loop Clamp	1	O'Reilly Auto Parts	85605
44				#6-32 x 0.5" Phillips Pan Head SS Machine Screw	2	Fastenal	1172516
45				#6-32 SS Nyloc Nut	2	Fastenal	1170855
46				#6 Flat SS Washer	2	Fastenal	1171006
47				Plasti-Dip - Black	0.05	Owenhouse	13275
48	W/H			3/8" Rubber Cushioned Loop Clamp	2	O'Reilly Auto Parts	85605
49				#10-32 x 0.5" Phillips Pan Head SS Machine Screw	2	Fastenal	1172515
50				#10-32 SS Nyloc Nut	2	Fastenal	1170858

Table 22: Slave Drum BOM - Part 3

ITEM NO.	ITEM ASSY	SUB ASSY	DRAWING NUMBER	DESCRIPTION	QNTY EACH	VENDOR	VENDOR PART NUMBER
51				#10 Flat SS Washer - Large OD	2	Fastenal	1171010
52				#10 SS Flat Washer	2	Fastenal	1171010
53				SAE 2-Pin Connector - 14 AWG	1	All Electronics	CON-319
54				D-Sub 9-pin Connector Housing	4	SteinAir	SA-1020
55				9-pin Male D-Sub	2	SteinAir	SA-1011
56				9-pin Female D-Sub	2	SteinAir	SA-1012
57				Contact Standard D-Sub Socket	9	SteinAir	SA-1017
58				Contact Standard D-Sub Pin	11	SteinAir	SA-1018
59				Light Plug 2 Position Mate-N-Lok	1	Digi-Key	A25757-ND
60				Socket 14-20 AWG Crimp	2	Digi-Key	A100715CT-ND
61				Connector Power Plug - Coaxial	1	Digi-Key	SC1052-ND
62				1 Amp Blade Fuse	1	Allied	740-1996
63				10 Amp Blade Fuse	1	amazon.com	VP/ATC-10
64				ATC Fuse Holder 10GA	1	the electrical depot	FHAC-02
65				ATC Fuse Holder 14GA	1	the electrical depot	FHAC-01
66				#10 22/18 AWG Ring Terminal	2	Fastenal	58600
67				#6 22/18 AWG Ring Terminal	2	Fastenal	58598
68				22/18 AWG Sealed Butt Connector	3	Fastenal	58591
69				#10 12/10 AWG Ring Terminal	2	Fastenal	58607
70				12/10 AWG Sealed Butt Connector	3	Fastenal	58589
71				16 AWG Tefzel Wire BLACK (in)	8	Sky Geek	M22759-16-16-0
72				16 AWG Tefzel Wire RED (in)	32	Sky Geek	M22759-16-16-2
73				20 AWG Tefzel Wire BLACK (in)	28	Sky Geek	M22759-16-20-0
74				20 AWG Tefzel Wire RED (in)	40	Sky Geek	M22759-16-20-2
75				20 AWG Tefzel Wire YELLOW (in)	62	Sky Geek	M22759-16-20-4
76				22 AWG Tefzel Wire BLACK (in)	47	Sky Geek	M22759-16-22-0

Table 23: Slave Drum BOM - Part 4

ITEM NO.	ITEM ASSY	SUB ASSY	DRAWING NUMBER	DESCRIPTION	QNTY EACH	VENDOR	VENDOR PART NUMBER
77				22 AWG Tefzel Wire RED (in)	18	Sky Geek	M22759-16-22-2
78				22 AWG Twisted Triple Tefzel (in)	54	SteinAir	D-B-O-Y-TW
79				1/8" Heat Shrink Tubing (in)	18	Digi-Key	DWP018K-ND
80				1/4" Heat Shrink Tubing (in)	24	Digi-Key	Q2F3X014B-100-ND
81				4" Cable Ties - Black	23	Fastenal	63122
82	MISC			20# Tire Ring	1	TrafFix Devices, Inc	Tire Ring
83				Sealant between wedge & drum (oz)	1	bestbuyautoequipment.com	LOC37523

Table 24: Pager Drum BOM – Part 1

ITEM NO.	ITEM ASSY	SUB ASSY	DRAWING NUMBER	DESCRIPTION	QNTY EACH	VENDOR	VENDOR PART #
1	Base			Standard Base	1	TrafFix Devices, Inc	N/A
2				0.5" Metal Plug	10	McMaster-Carr	9563K64
3				Black Silicone Adhesive Sealant (oz)	1	Fastenal	233650
4			aSE10001	Base Plate	1	Excel Machine	N/A
5			aSE10005	L & R Bracket	2	Excel Machine	N/A
6			aSE10002	Battery Tray	1	Excel Machine	N/A
7				Battery Abrasion Pad (sq in)	44	O'Reilly Auto Parts	1851
8			aSE10003	Battery Strap	1	Excel Machine	N/A
9				Battery Strap Abrasion Pad (in)	13	McMaster-Carr	93625K229
10				Werker 12V 26Ah AGM Battery	1	Batteries Plus	WKA12-26NB
11				3/8" Rubber Cushioned Loop Clamp	1	O'Reilly Auto Parts	85605
12				#10-32 HFH SS Stud	16	D.B. Roberts, Inc	PEMHFH-032-8ZI
13				#10-32 SS Nyloc Nut	10	Fastenal	1170858
14				#10 Flat SS Washer 0.5" OD	10	Fastenal	1171xxx
15		Pager		LRS Pager Transmitter	1	Long Range Systems	T74C232
16			NA	Pager Bracket	1	Excel Machine	N/A
17				#10-32 SS Nyloc Nut	4	Fastenal	1170858
18				#10 Flat SS Washer 0.5" OD	4	Fastenal	1171xxx
19				1/4" Rubber Cushioned Loop Clamp	3	Fastenal	216763

Table 25: Pager Drum BOM - Part 2

ITEM NO.	ITEM ASSY	SUB ASSY	DRAWING NUMBER	DESCRIPTION	QNTY EACH	VENDOR	VENDOR PART #
20	Drum			LDPE Drum	1	TrafFix Devices, Inc	18000
21		Radio	aSE20003	Radio Bracket	1	Excel Machine	N/A
22				ZigBee Radio	1	Mouser Electronics	888-XA-A14-CS2P
23				#6-32 x .75 Phillips Pan Head SS Machine Screw	2	Fastenal	1172388
24				#6-32 SS Nyloc Nut	2	Fastenal	1170855
25				#6-32 Flat SS Washer	4	Fastenal	1171006
26				1/4" Rubber Cushioned Loop Clamp	1	Fastenal	216763
27		Charge		SAE 2-Pin Surface Mount Battery Charging Port	1	Solar Capitalist, LLC	SAE 2-Pin Surface Mnt
28				SAE 2-Pin Connector - 10 AWG	1	All Electronics	CON-321
29				#10-32 x 0.5" Phillips Pan Head SS Machine Screw	4	Fastenal	1172515
30				#10 Flat SS Washer - Large OD	4	Fastenal	1171010
31				#10-32 SS Nyloc Nut	4	Fastenal	1170858
32		Power		SPST Toggle Switch	1	ElecDirect	5520
33				Walled Faceplate Switch Guard	1	ElecDirect	82465
34				Toggle Switch Boot - Open End	1	ElecDirect	765003
35				1/2" Nylon Flat Washer	1	Fastenal	11103167
36				1/4" Rubber Cushioned Loop Clamp	1	Fastenal	216763
37				#6-32 x 0.5" Phillips Pan Head SS Machine Screw	2	Fastenal	1172516
38				#6-32 SS Nyloc Nut	2	Fastenal	1170855
39				#6 Flat SS Washer	2	Fastenal	1171006
40				Plasti-Dip - Black	0.05	Owenhouse	13275
41		Pager	NA	Antenna Bracket	1	Excel Machine	N/A
42				#6-32 x 0.5" Phillips Pan Head SS Machine Screw	1	Fastenal	1172516
43				#6 Flat SS Washer - Large OD	1	Fastenal	1171006
44				#6 Flat SS Washer	1	Fastenal	1171006
45				#6-32 SS Nyloc Nut	1	Fastenal	1170855
46	W/H			3/8" Rubber Cushioned Loop Clamp	2	O'Reilly Auto Parts	85605
47				#10-32 x 0.5" Phillips Pan Head SS Machine Screw	2	Fastenal	1172515
48				#10-32 SS Nyloc Nut	2	Fastenal	1170858
49				#10 Flat SS Washer - Large OD	2	Fastenal	1171010
50				#10 Flat SS Washer	2	Fastenal	1171xxx

Table 26: Pager Drum BOM - Part 3

ITEM NO.	ITEM ASSY	SUB ASSY	DRAWING NUMBER	DESCRIPTION	QNTY EACH	VENDOR	VENDOR PART #
51				SAE 2-Pin Connector - 14 AWG	1	All Electronics	CON-319
52				D-Sub 9-pin Connector Housing	3	SteinAir	SA-1020
53				9-pin Male D-Sub	1	SteinAir	SA-1011
54				9-pin Female D-Sub	2	SteinAir	SA-1012
55				Contact Standard D-Sub Socket	9	SteinAir	SA-1017
56				Contact Standard D-Sub Pin	6	SteinAir	SA-1018
57				Connector PowerPlug - Coaxial	1	Digi-Key	SC1052-ND
58				50 ohm BNC Connector	1	L-comm	BAC515
59				50 ohm Bulkhead BNC Connector	1	L-comm	BAC522
60				RG-58 Coax Cable (in)	45	L-comm	RG58C-100
61				1 Amp Blade Fuse	1	Allied	740-1996
62				10 Amp Blade Fuse	1	amazon.com	VP/ATC-10
63				ATC Fuse Holder 10GA	1	the electrical depot	FHAC-02
64				ATC Fuse Holder 14GA	1	the electrical depot	FHAC-01
65				#10 22/18 AWG Ring Terminal	2	Fastenal	58600
66				#6 22/18 AWG Ring Terminal	2	Fastenal	58598
67				22/18 AWG Sealed Butt Connector	2	Fastenal	58591
68				16/14 AWG Sealed Butt Connector	1	Fastenal	58590
69				#10 12/10 AWG Ring Terminal	2	Fastenal	58607
70				12/10 AWG Sealed Butt Connector	2	Fastenal	58589
71				16 AWG Tefzel Wire BLACK (in)	8	Sky Geek	M22759-16-16-0
72				16 AWG Tefzel Wire RED (in)	20	Sky Geek	M22759-16-16-2
73				20 AWG Tefzel Wire BLACK (in)	30	Sky Geek	M22759-16-20-0
74				20 AWG Tefzel Wire RED (in)	36	Sky Geek	M22759-16-20-2
75				22 AWG Tefzel Wire BLACK (in)	50	Sky Geek	M22759-16-22-0
76				22 AWG Tefzel Wire RED (in)	18	Sky Geek	M22759-16-22-2
77				22 AWG Twisted Triple Tefzel (in)	28	SteinAir	D-B-O-Y-TW
78				1/8" Heat Shrink Tubing (in)	8	Digi-Key	DWP018K-ND
79				1/4" Heat Shrink Tubing (in)	12	Digi-Key	Q2F3X014B-100-ND
80				4" Cable Ties - Black	18	Fastenal	63122
81	MISC			Service Pager 467.75 MHz	10	Long Range Systems	Service Pager
82				20# Tire Ring	1	TrafFix Devices, Inc	Tire Ring

Table 27: Repeater Drum BOM – Part 1

ITEM NO.	ITEM ASSY	SUB ASSY	DRAWING NUMBER	DESCRIPTION	QNTY EACH	VENDOR	VENDOR PART #
1	Base			Standard Base	1	TrafFix Devices, Inc	N/A
2				0.5" Metal Plug	10	McMaster-Carr	9563K64
3				Black Silicone Adhesive Sealant (oz)	1	Fastenal	233650
4			aSE10001	Base Plate	1	Excel Machine	N/A
5			aSE10005	L & R Bracket	2	Excel Machine	N/A
6			aSE10002	Battery Tray	1	Excel Machine	N/A
7				Battery Abrasion Pad (sq in)	44	O'Reilly Auto Parts	1851
8			aSE10003	Battery Strap	1	Excel Machine	N/A
9				Battery Strap Abrasion Pad (in)	13	McMaster-Carr	93625K229
10				Werker 12V 26Ah AGM Battery	1	Batteries Plus	WKA12-26NB
11				3/8" Rubber Cushioned Loop Clamp	1	O'Reilly Auto Parts	85605
12				#10-32 HFH SS Stud	14	D.B. Roberts, Inc	PEMHFH-032-8ZI
13				#10-32 SS Nyloc Nut	11	Fastenal	1170858
14				#10 Flat SS Washer 0.5" OD	11	Fastenal	1171xxx
15		Repeater		LRS Repeater	1	Long Range Systems	xxx
16			NA	Repeater Bracket	1	Excel Machine	N/A
17				#10-32 SS Nyloc Nut	4	Fastenal	1170858
18				#10 Flat SS Washer 0.5" OD	4	Fastenal	1171xxx
19	Drum			LDPE Drum	1	TrafFix Devices, Inc	18000
20		Charge		SAE 2-Pin Surface Mount Battery Charging Port	1	Solar Capitalist, LLC	SAE 2-Pin Surface Mnt
21				SAE 2-Pin Connector - 10 AWG	1	All Electronics	CON-321
22				#10-32 x 0.5" Phillips Pan Head SS Machine Screw	4	Fastenal	1172515
23				#10 Flat SS Washer - Large OD	4	Fastenal	1171010
24				#10-32 SS Nyloc Nut	4	Fastenal	1170858
25		Power		SPST Toggle Switch	1	ElecDirect	5520
26				Walled Faceplate Switch Guard	1	ElecDirect	82465
27				Toggle Switch Boot - Open End	1	ElecDirect	765003
28				1/2" Nylon Flat Washer	1	Fastenal	11103167

Table 28: Repeater Drum BOM - Part 2

ITEM NO.	ITEM ASSY	SUB ASSY	DRAWING NUMBER	DESCRIPTION	QNTY EACH	VENDOR	VENDOR PART #
29				#6-32 x 0.5" Phillips Pan Head SS Machine Screw	2	Fastenal	1172516
30				#6-32 SS Nyloc Nut	2	Fastenal	1170855
31				#6 Flat SS Washer	2	Fastenal	1171006
32				Plasti-Dip - Black	0.05	Owenhouse	13275
33		Repeater	NA	Antenna Bracket	1	Excel Machine	N/A
34				#10-32 x 0.5" Phillips Pan Head SS Machine Screw	1	Fastenal	1172515
35				#10 Flat SS Washer - Large OD	1	Fastenal	1171010
36				#10-32 SS Nyloc Nut	1	Fastenal	1170858
37	W/H			3/8" Rubber Cushioned Loop Clamp	1	O'Reilly Auto Parts	85605
38				SAE 2-Pin Connector - 14 AWG	1	All Electronics	CON-319
39				Connector Power Plug - Coaxial	1	Digi-Key	SC1052-ND
40				50 ohm BNC Connector	1	L-comm	BAC515
41				50 ohm Bulkhead BNC Connector	1	L-comm	BAC522
42				RG-58 Coax Cable (in)	45	L-comm	RG58C-100
43				1 Amp Blade Fuse	1	Allied	740-1996
44				10 Amp Blade Fuse	1	amazon.com	VP/ATC-10
45				ATC Fuse Holder 12GA	1	Fastenal	703467
46				ATC Fuse Holder 14GA	1	the electrical depot	FHAC-01
47				#6 22/18 AWG Ring Terminal	2	Fastenal	58598
48				22/18 AWG Sealed Butt Connector	3	Fastenal	58591
49				#10 16/14 AWG Ring Terminal	2	Fastenal	58604
50				#6 16/14 AWG Ring Terminal	2	Fastenal	58602
51				16/14 AWG Sealed Butt Connector	4	Fastenal	58590
52				#10 12/10 AWG Ring Terminal	2	Fastenal	58607
53				12/10 AWG Sealed Butt Connector	3	Fastenal	58589
54				20 AWG Tefzel Wire BLACK (in)	12	Sky Geek	M22759-16-20-0
55				20 AWG Tefzel Wire RED (in)	20	Sky Geek	M22759-16-20-2

Table 29: Repeater Drum BOM - Part 3

ITEM NO.	ITEM ASSY	SUB ASSY	DRAWING NUMBER	DESCRIPTION	QNTY EACH	VENDOR	VENDOR PART #
56				1/4" Heat Shrink Tubing (in)	6	Digi-Key	Q2F3X014B-100-ND
57				4" Cable Ties - Black	4	Fastenal	63122
58	MISC			20# Tire Ring	1	TrafFix Devices, Inc	Tire Ring

8.2. Connector Diagrams

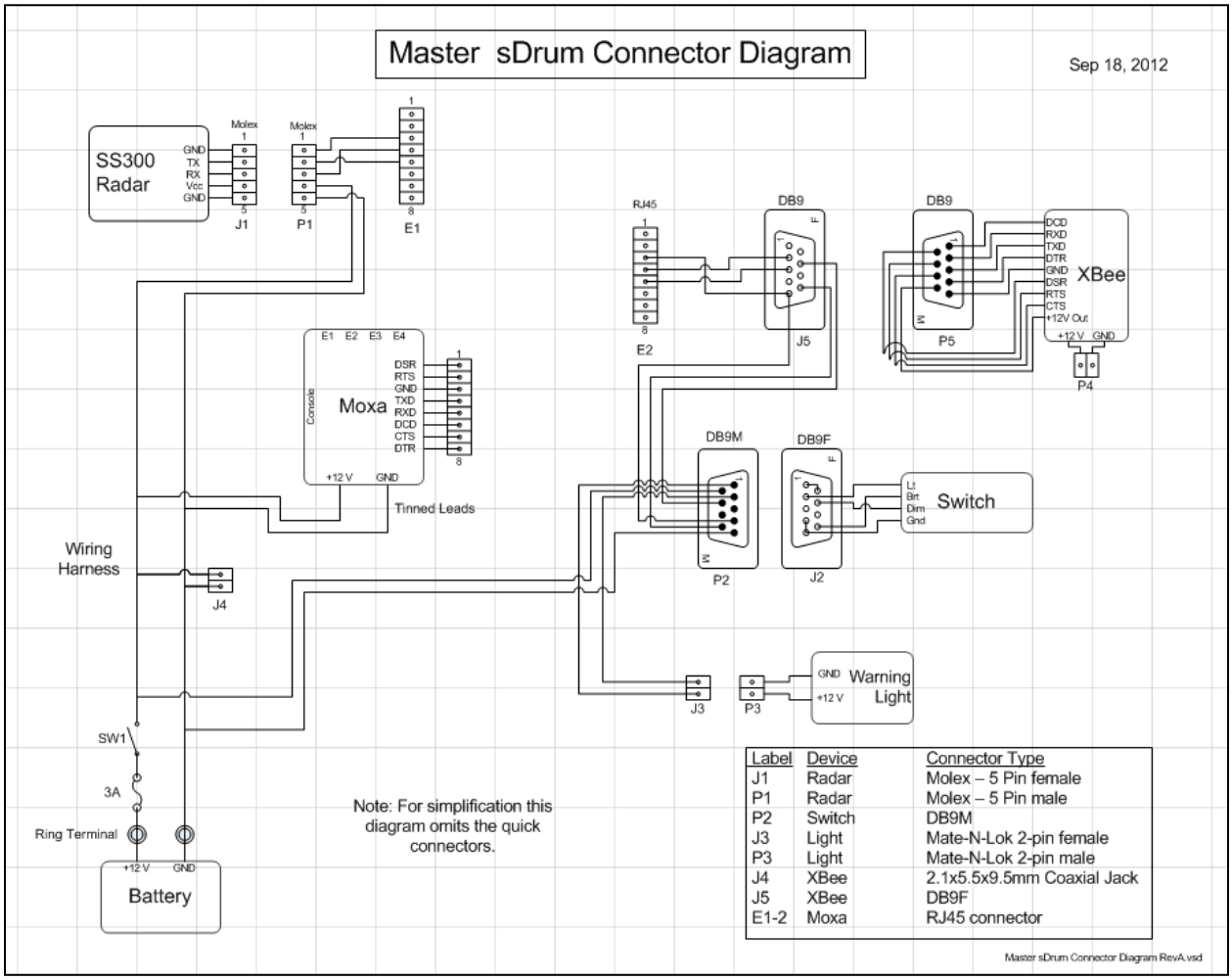

Figure 84: Master Drum Connector Diagram

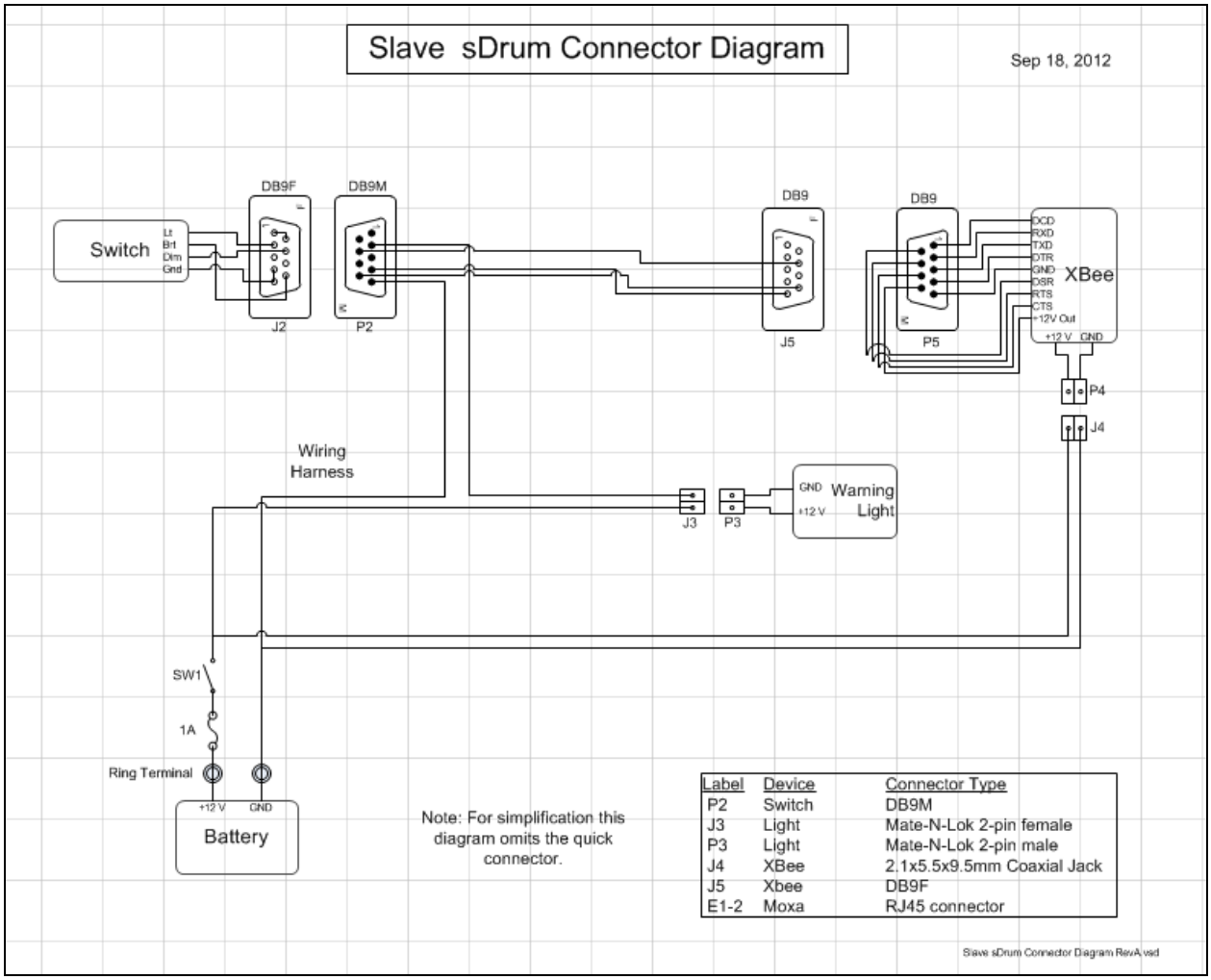

Label	Device	Connector Type
P2	Switch	DB9M
J3	Light	Mate-N-Lok 2-pin female
P3	Light	Mate-N-Lok 2-pin male
J4	XBee	2.1x5.5x9.5mm Coaxial Jack
J5	Xbee	DB9F
E1-2	Moxa	RJ45 connector

Figure 85: Slave Drum Connector Diagram

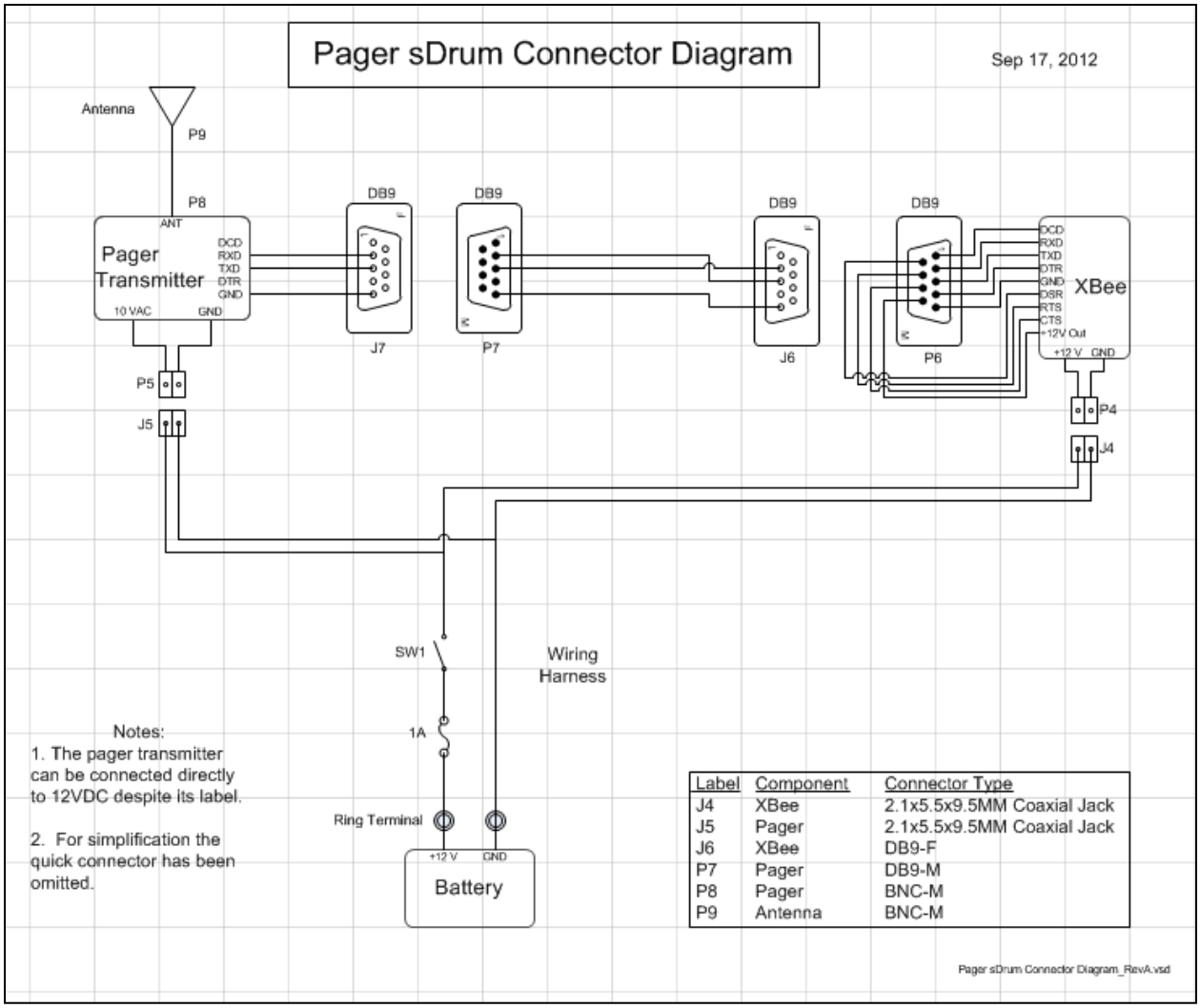

Figure 86: Pager Drum Connector Diagram

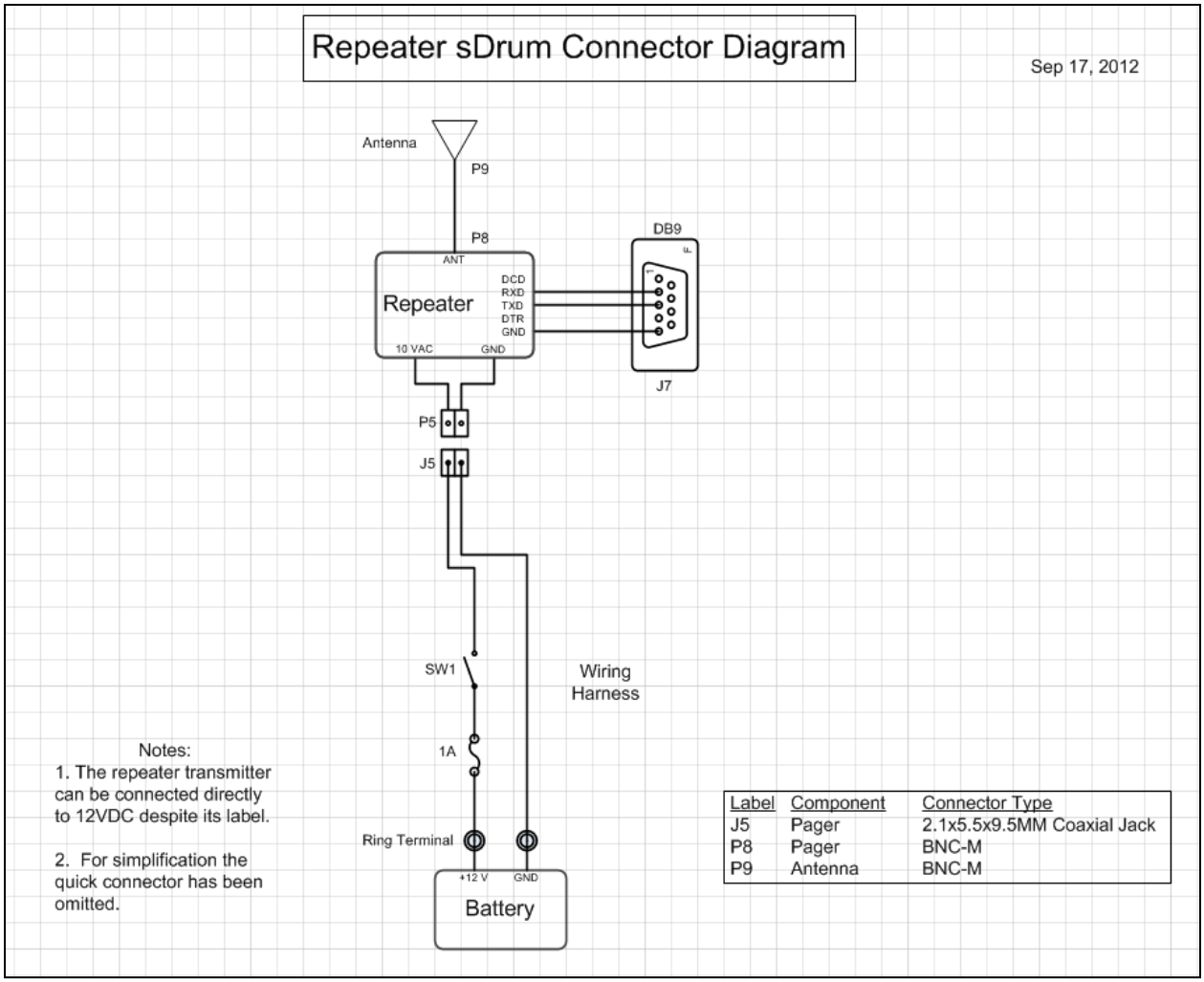

Figure 87: Repeater Drum Connector Diagram

8.3. Drawings

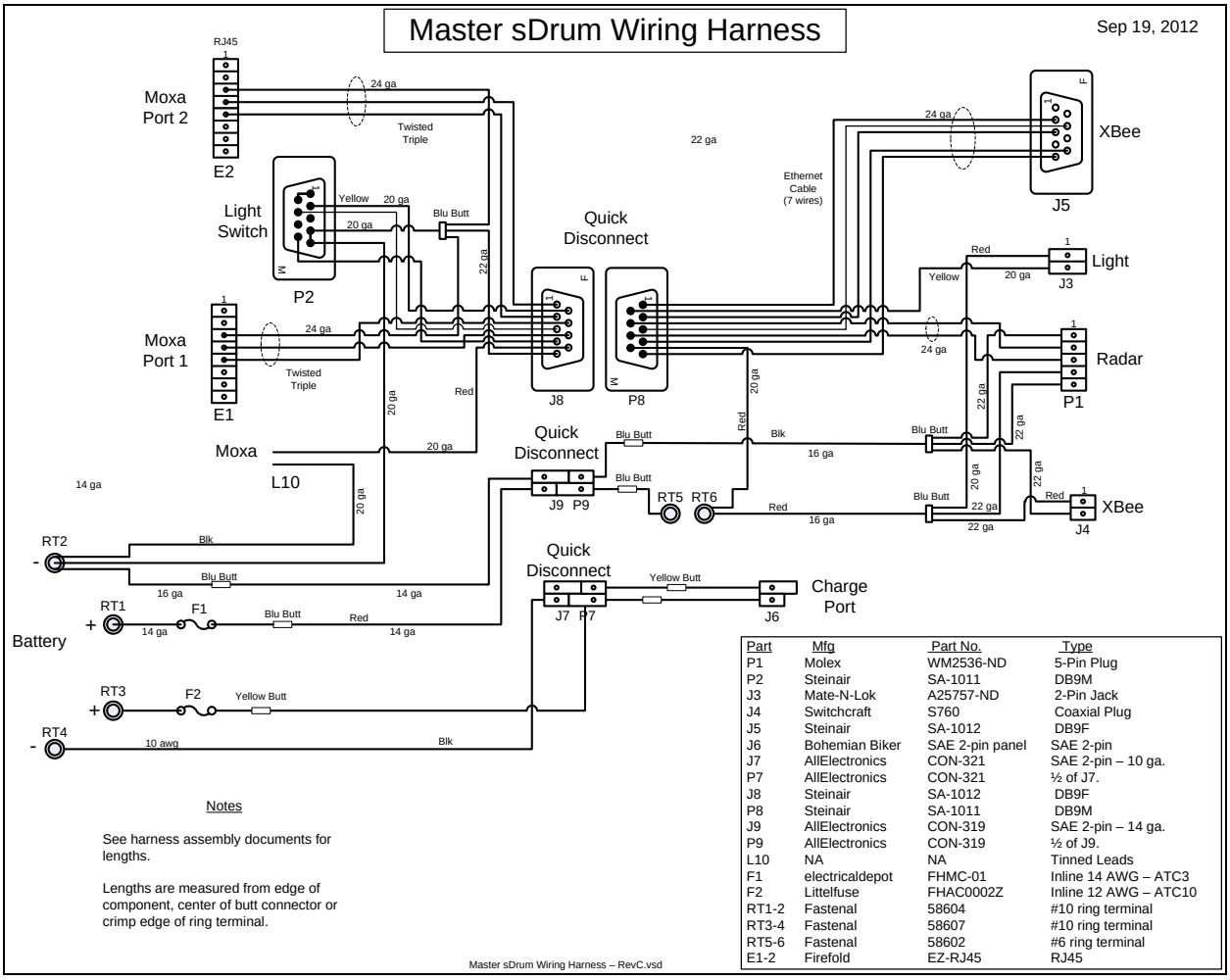

Part	Mfg	Part No.	Type
P1	Molex	WM2536-ND	5-Pin Plug
P2	Steinair	SA-1011	DB9M
J3	Mate-N-Lok	A25757-ND	2-Pin Jack
J4	Switchcraft	S760	Coaxial Plug
J5	Steinair	SA-1012	DB9F
J6	Bohemian Biker	SAE 2-pin panel	SAE 2-pin
J7	AllElectronics	CON-321	SAE 2-pin – 10 ga.
P7	AllElectronics	CON-321	½ of J7.
J8	Steinair	SA-1012	DB9F
P8	Steinair	SA-1011	DB9M
J9	AllElectronics	CON-319	SAE 2-pin – 14 ga.
P9	AllElectronics	CON-319	½ of J9.
L10	NA	NA	Tinned Leads
F1	electricaldepot	FHMC-01	Inline 14 AWG – ATC3
F2	Littelfuse	FHAC0002Z	Inline 12 AWG – ATC10
RT1-2	Fastenal	58604	#10 ring terminal
RT3-4	Fastenal	58607	#10 ring terminal
RT5-6	Fastenal	58602	#6 ring terminal
E1-2	Firefold	EZ-RJ45	RJ45

Figure 88: Master Drum Wiring Harness

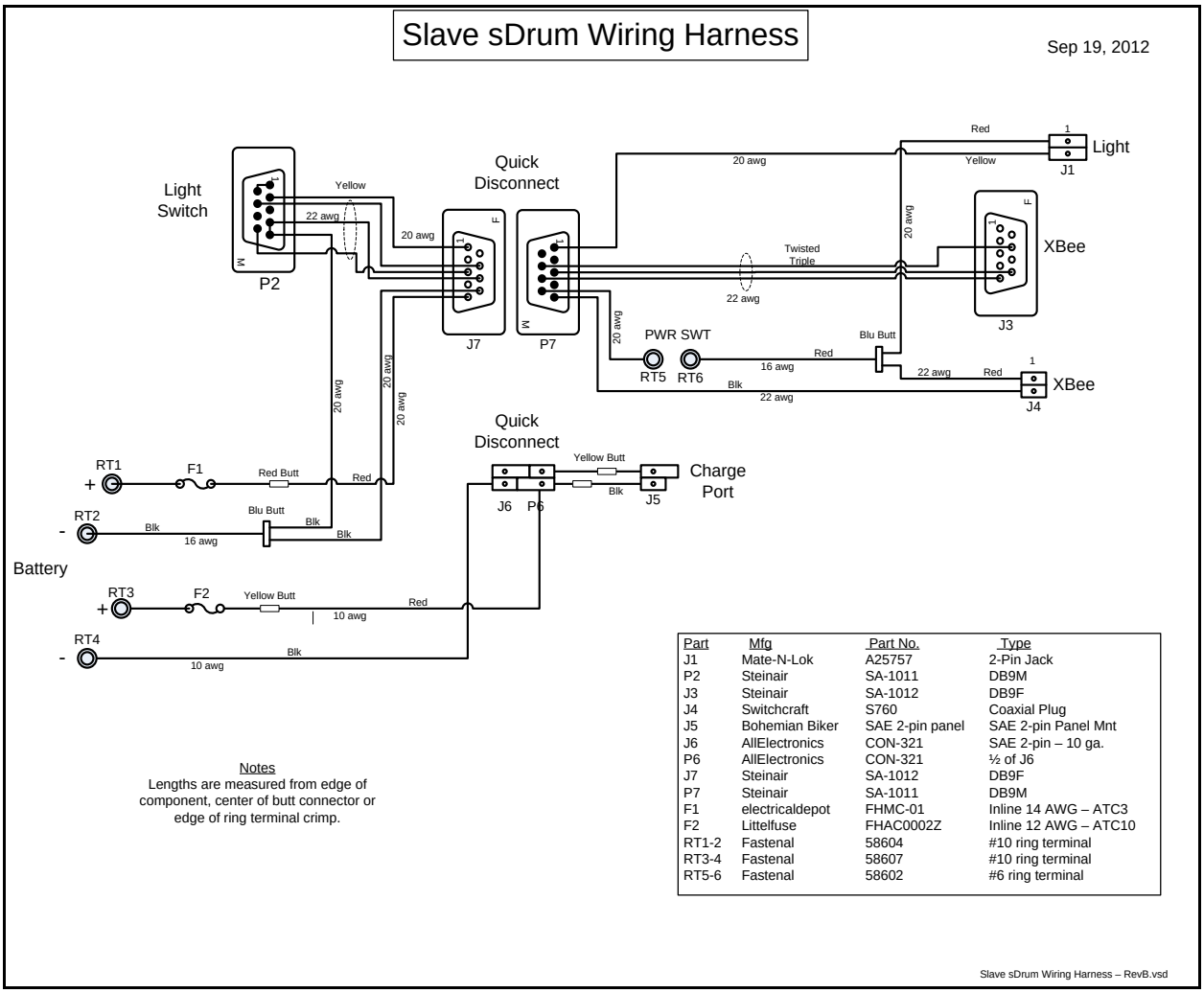

Part	Mfg	Part No.	Type
J1	Mate-N-Lok	A25757	2-Pin Jack
P2	Steinair	SA-1011	DB9M
J3	Steinair	SA-1012	DB9F
J4	Switchcraft	S760	Coaxial Plug
J5	Bohemian Biker	SAE 2-pin panel	SAE 2-pin Panel Mnt
J6	AllElectronics	CON-321	SAE 2-pin – 10 ga.
P6	AllElectronics	CON-321	½ of J6
J7	Steinair	SA-1012	DB9F
P7	Steinair	SA-1011	DB9M
F1	electricaldepot	FHMC-01	Inline 14 AWG – ATC3
F2	Littelfuse	FHAC0002Z	Inline 12 AWG – ATC10
RT1-2	Fastenal	58604	#10 ring terminal
RT3-4	Fastenal	58607	#10 ring terminal
RT5-6	Fastenal	58602	#6 ring terminal

Figure 89: Slave Drum Wiring Harness

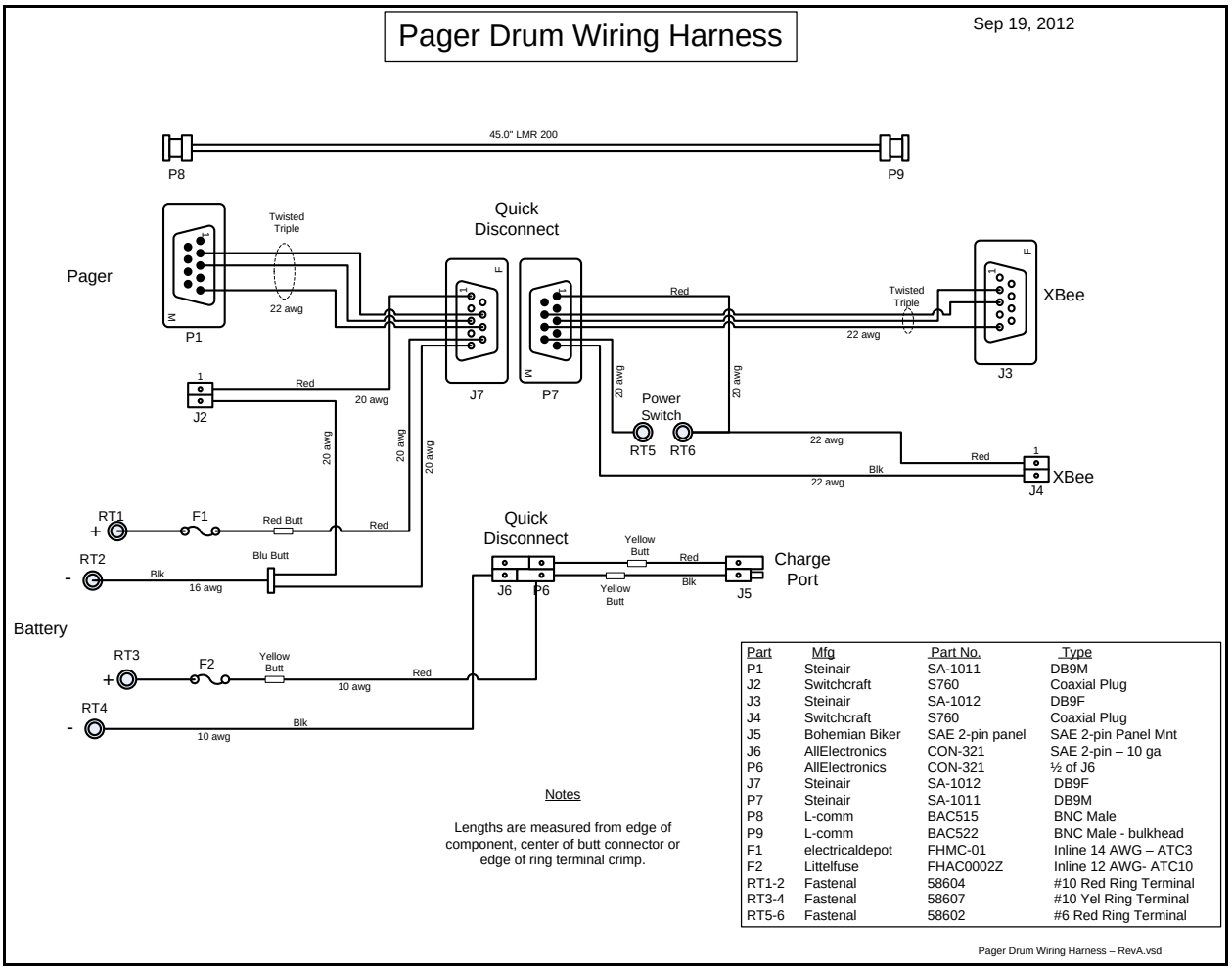

Part	Mfg	Part No.	Type
P1	Steinair	SA-1011	DB9M
J2	Switchcraft	S760	Coaxial Plug
J3	Steinair	SA-1012	DB9F
J4	Switchcraft	S760	Coaxial Plug
J5	Bohemian Biker	SAE 2-pin panel	SAE 2-pin Panel Mnt
J6	AllElectronics	CON-321	SAE 2-pin – 10 ga
P6	AllElectronics	CON-321	½ of J6
J7	Steinair	SA-1012	DB9F
P7	Steinair	SA-1011	DB9M
P8	L-comm	BAC515	BNC Male
P9	L-comm	BAC522	BNC Male - bulkhead
F1	electricaldepot	FHMC-01	Inline 14 AWG – ATC3
F2	Littelfuse	FHAC0002Z	Inline 12 AWG- ATC10
RT1-2	Fastenal	58604	#10 Red Ring Terminal
RT3-4	Fastenal	58607	#10 Yel Ring Terminal
RT5-6	Fastenal	58602	#6 Red Ring Terminal

Figure 90: Pager Drum Wiring Harness

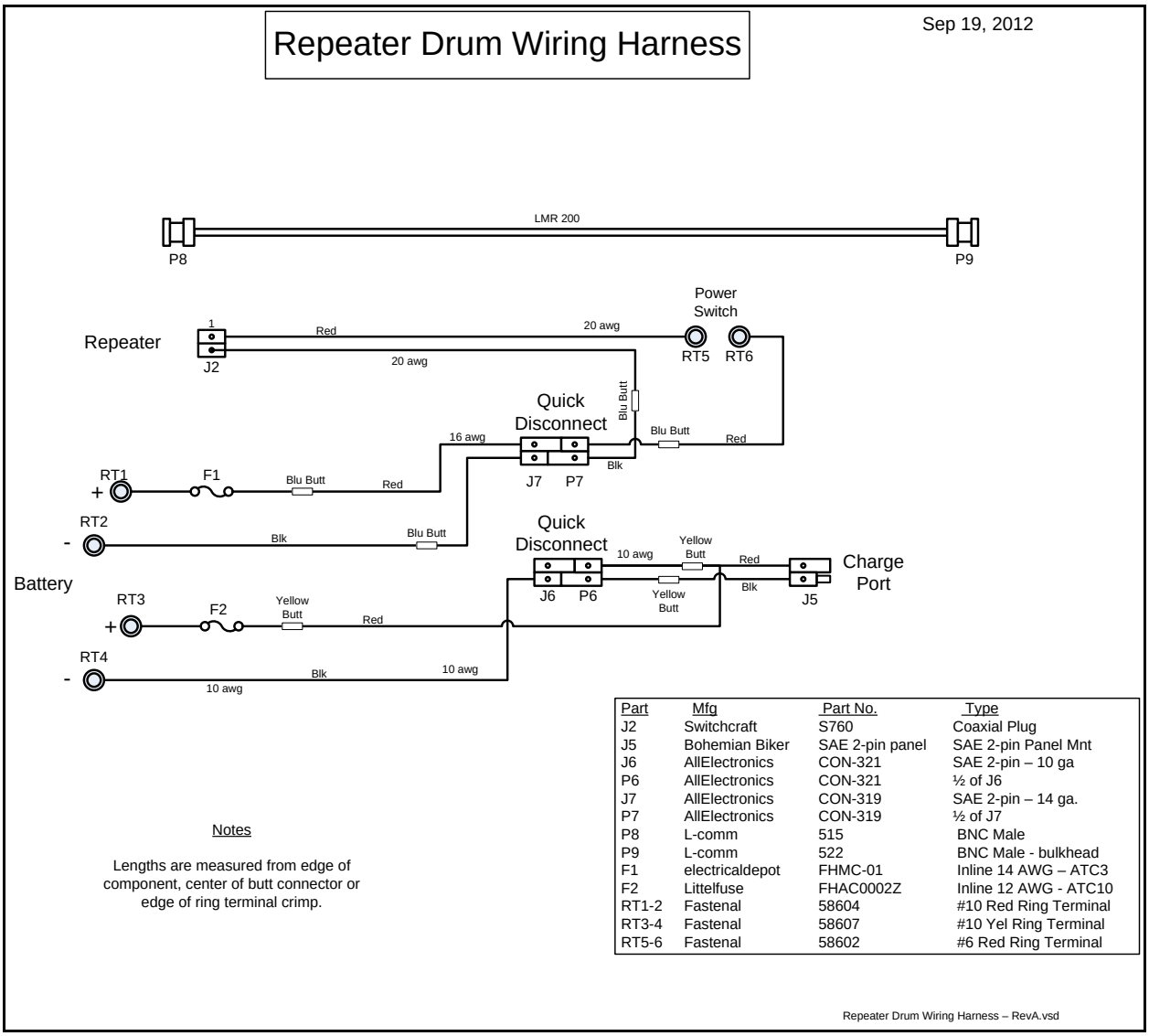

Part	Mfg	Part No.	Type
J2	Switchcraft	S760	Coaxial Plug
J5	Bohemian Biker	SAE 2-pin panel	SAE 2-pin Panel Mnt
J6	AllElectronics	CON-321	SAE 2-pin – 10 ga
P6	AllElectronics	CON-321	½ of J6
J7	AllElectronics	CON-319	SAE 2-pin – 14 ga.
P7	AllElectronics	CON-319	½ of J7
P8	L-comm	515	BNC Male
P9	L-comm	522	BNC Male - bulkhead
F1	electricaldepot	FHMC-01	Inline 14 AWG – ATC3
F2	Littelfuse	FHAC0002Z	Inline 12 AWG - ATC10
RT1-2	Fastenal	58604	#10 Red Ring Terminal
RT3-4	Fastenal	58607	#10 Yel Ring Terminal
RT5-6	Fastenal	58602	#6 Red Ring Terminal

Figure 91: Repeater Drum Wiring Harness

9. REFERENCES

1 U.S. Department of Transportation. Manual on Uniform Traffic Control Devices (MUTCD), 2009 Edition.
2 SAE International. Surface Vehicle Recommended Practice. SAE J845, December, 2007.
3 http://www.houston-radar.com/SS300-OEM-doppler-speed-sensor.php (As of December 19, 2012)
4 http://www.houston-radar.com/user-manuals/SS300UserManual-Release.pdf -- Page 32
5 http://radar.757.org/rdrerror.htm (As of December 19, 2012)
6 http://www.pbelectronics.com/police_lidar_laser.htm (As of December 20, 2012)
7 Liyange L. and Mubarak S, "Video Based Vehicle Speed Computation (HAWK)" University of Central Florida, Orlando, Florida (2008).
8 Gordon R.L. and Tighe W., *Traffic Control Handbook,* Dunn Engineering and Siemens Intelligent Transportation Systems, October 2005, p 6-6.
9 http://xtralis.com/product_view.cfm?product_id=58 (As of December 20, 2012)
10 "Detection Technology for IVHS – Volume 1: Final Report Addendum." FHWA-RD-96-100 (July 1995).
11 http://www.maxbotix.com/articles/054.htm (As of December 19, 2012)
12 http://www.cs.cmu.edu/~ram/capsense/intro.html (As of December 19, 2012)
13 http://baumer.amirada.net/pfinder_sensor/downloads/Produkte/PDF/Datenblatt/Kapazitive_Sensoren/Kapazitive_Sensoren_CFAK_30_Sn_30_mm_web_EN.pdf (As of December 19, 2012)
14 Mimbela, L.E. and Klein, L.A., "Summary of Vehicle Detection and Surveillance Technologies Used In Intelligent Transportation Systems", New Mexico State University and Klein & Associates, Las Cruces, New Mexico (August 2007).
15 http://www.far-far-away.com/~yousif/articles/wifi-sig.php (As of December 20, 2012)
16 Balani, Rahul, *Energy Consumption Analysis for Bluetooth, WiFi, and Cellular Networks,* University of California at Los Angeles, Los Angeles, California, 2007.
17 *Wi-Fi CERTIFIED n: Longer-Range, Faster-Throughput, Multimedia-Grade Wi-Fi Networks,* Wi-Fi Alliance, (September 2009).
18 http://www.wimax.com/wimax-technologies-standards/what-is-the-range-of-wimax (As of December 20, 2012)
19 Poulin, Darcy, "How Much Power Do WiMAX Nets Need?" *EE Times,* (November 11, 2008).
20 Weinschenk, Carl, "Speeding Up WiMax." *IT Business Edge,* (April 16, 2010).
21 http://www.icpdas-usa.com/products.php?PID=3335 (As of December 20, 2012)
22 http://www.digi.com/products/wireless-wired-embedded-solutions/zigbee-rf-modules/zigbee-mesh-module/xbee-zb-module#specs (As of December 20, 2012)
23 http://www.digi.com/products/wireless-wired-embedded-solutions/zigbee-rf-modules/zigbee-mesh-module/xbee-zb-module#specs (As of December 21, 2012).
24 Leung K.K., Clark M.V., McNain B., Kostic Z., Cimini L.J., and Winters J.H., *Outdoor IEEE 802.11 Cellular Networks: Radio and MAC Design, and Their Performance,* Imperial College London, London, England, 2002.
25 Philips 2002 & 2004 Worldwide Wireless Telecommunications Standards chart.
26 http://www.coe.montana.edu/ee/rwolff/shel%20leader%20dsrc.pdf (As of December 20, 2012)
27 Bullough, John D. "Performance Objectives for Light Sources Used in Emergency Notification Appliances" NFPA Annual Conference & Expo, Las Vegas, Nevada 2012.
28 Bullough, J.D., and Zhu, Y., *Performance Objectives for Light Sources Used in Emergency Notification Appliances,* Final Report, Lighting Research Center, Rensselaer Polytechnic Institute, Quincy, Massachusetts (May 2012).
29 http://www.electronics123.com/s.nl/it.A/id.2572/.f (As of December 20, 2012)
30 http://www.whelen.com/_AUTOMOTIVE/details_prod.php?head_id=1&cat_id=7&prod_id=306 (As of December 20, 2012)
31 http://www.seco-larm.com/pdfs/PI-SL-126.pdf (As of December 20, 2012)
32 http://www.batteryprice.com/powersonicps-12260nb12v26ahleadacidbattery.aspx (As of December 20, 2012)

33 http://www.batteryspec.com/cgi-bin/cart.cgi?action=link&product=26 (As of December 20, 2012)
34 http://www.batteryspace.com/nimhbatterycombo12v26ah312whtwosmartchargersformobiledevice.aspx (As of December 20, 2012)
35 http://lithiumpros.com/products/more-info/?id=116&part_number=C375 (As of December 20, 2012)
36 *Manual on Uniform Traffic Control Devices for Streets and Highways,* Ed 2009, Rev 1, May, 2012 & Rev 2, May, 2012 p 606-607.
37 *Indiana Design Manual,* Ed 2011 p 700.
38 http://www.traffixdevices.com/products/channelizers/channelizer-drums/ (As of December 21, 2012)
39 Ross, H.E., Sickling, D.L., Zimmer, R.A., Recommended Procedures for the Safety Performance Evaluation of Highway Features, NCHRP Report 350, Transportation Research Board, National Research Council (1993).
40 Wright, F.J., "Work Zone Safety: Generic Crashworthy Barricade Designs, Drums with Warning Lights, Generic Lightweight Warning, and Lights Acceptance Letter WZ-54" (September 15, 2000).
41 *Manual on Uniform Traffic Control Devices, Part VI: Standards and Guides for Traffic Controls for Street and Highway Construction, Maintenance, Utility, and Incident Management Operations,* Ed 1988, Rev 3, September 3, 1993 p 6F-5.
42 Sheckler, Ross D., *Prototyping and Testing of A Fully Autonomous Road Construction Beacon, The iCone*, iCone Products LLC, Liverpool, NY, April 2010.
43 Sawicki, Donald S., *Police Traffic Speed Radar Handbook: A Comprehensive Guide to Speed Measuring Systems, Includes Microwave and Laser Radar*, CreateSpace Publishing, January 31, 2011.
44 http://www.digi.com/support/kbase/kbaseresultdetl?id=2187 (As of January 2, 2013).