California Department of Transportation

Project Development Procedures Manual

Continuously Revised and Published on the World Wide Web

STATE OF CALIFORNIA
Department of Transportation
Division of Design

Foreword

Foreword

The *Project Development Procedures Manual* (PDPM) provides the functional framework of policies and procedures for the structured task, sub-task approach described in the *Project Development Workflow Tasks Manual*.

The PDPM describes the procedures for State highway project development. These instructions, with references contained herein, supersede all previously issued instructions.

The manual was prepared primarily for the Project Engineer (PE) and the Project Manager (PM), or other professional, as appropriate in the various functional areas, in "responsible charge" of project development. Although this manual and other manuals and policies provide standards and guidelines, projects must be developed by the proper application of these standards and procedures, guided by good judgment.

The PDPM consists of three Parts and Appendices. Part 1 contains general information. Part 2 describes the project development process in a chronological manner. Part 3 contains specific project development procedures of specialized nature. Appendices A through X contain guidelines for various project development reports while Appendices AA through OO contain all other items that do not conveniently fit in the text of the manual.

The PDPM will be updated on the Internet and can be accessed through the Caltrans home page. Manual holders can subscribe, on the Internet, and receive notification of any changes when they occur. Paper copies of changes will not be available, although anyone who access the PDPM on the Internet can arrange on their own to have a paper copy made.

If a paper copy is maintained by the manual holder, it is important for the manual holder to maintain and use an up-to-date manual. This will insure proper reference to the latest policies and procedures. Responsibility for keeping the manual current belongs to the holder of the manual. One type of update is used - a "Manual Change Transmittal" - published with each change to this edition and will be available on the Internet. This form should be kept in the front of the manual, immediately after the title page.

When using this new manual you may find that additional information is desired on certain specific topics. If this is the case please bring this to the attention of the Division of Design. Suggestions are invited for improvement of the instructions and the economy of the work. The form, "Proposed Revision to Project Development Procedures Manual", should be used for this purpose.

Project Development Procedures Manual Revision Request

Proposed By: _____ _____
Name *Date*

_____ _____
Unit *Phone Number*

Check One:

Notification of errors ☐

Notification of proposed change ☐

Attach the draft document that authorizes the change in policy/procedure. Target date for statewide review of authorizing document: _____

Subject of Proposed Revision:

Reason for Proposed Revision:

Location of Proposed Revision:

FOLLOWING A CONSULTATION WITH THE PDPM EDITOR, SUBMIT SUGGESTED WORDING FOR PROPOSED REVISION.

****

[For Division of Design Use Only]

Submitted suggested wording for new policy ☐
Submitted suggested language for change to existing policy ☐
Submitted suggested language for deletion of policy ☐
Submitted suggested language for other (explain) ☐

PDPM EDITOR RECOMMENDS THE FOLLOWING ACTION:

Proceed with preparation of draft revision ☐
Reject proposal (explain) ☐

Concurred By: _____ _____
Chief, Office of Standards and Procedures *Date*

Project Development Procedures Manual

Table of Contents

Part 1 – General Information (Chapters 1 through 7)

CHAPTER 1 - Introduction 1-3

SECTION 1 - About this Manual 1-3
SECTION 2 - Related Manuals and Guidelines 1-6
SECTION 3 - Abbreviations Used in this Manual 1-11
SECTION 4 - Transportation Planning Leads to Project Development 1-21
ARTICLE 1 - General 1-21
ARTICLE 2 - Transportation Systems 1-22
ARTICLE 3 - Regional and System Planning 1-24
ARTICLE 4 - Corridor Planning 1-38
SECTION 5 - Project Development Philosophy 1-41

CHAPTER 2 - Roles and Responsibilities 2-5

SECTION 1 - Headquarters Division of Design 2-5
SECTION 2 - Project Planning and Design Function of Headquarters Division of Design 2-8
ARTICLE 1 - General 2-8
ARTICLE 2 - Headquarters Project Delivery Coordinator 2-11
ARTICLE 3 - Other Support Services 2-12
SECTION 3 - District 2-17
SECTION 4 - Project Management 2-21
SECTION 5 - Special Funded Projects and Related Projects 2-23
SECTION 6 - Lead Agency 2-36
SECTION 7 - Federal Government 2-39
ARTICLE 1 - Federal Highway Administration 2-39
ARTICLE 2 - Other Federal Agencies 2-40
SECTION 8 - Use of Consultants 2-43
SECTION 9 - Signatures on Technical Reports 2-45

CHAPTER 3 - Involvement of Caltrans Functional Units..... 3-5

SECTION 1 - Transportation Planning 3-5
SECTION 2 - Environmental 3-8
SECTION 3 - Surveys 3-11
SECTION 4 - Right-of-Way 3-14
SECTION 5 - Real Property Asset Management 3-18
SECTION 6 - Materials 3-19
SECTION 7 - Traffic 3-21
SECTION 8 - Structure Design 3-23
SECTION 9 - Hydraulics 3-27
SECTION 10 - Construction 3-30
SECTION 11 - Maintenance 3-32
SECTION 12 - Landscape Architecture 3-34
SECTION 13 - Utilities 3-37
SECTION 14 - District Office Engineer 3-39

CHAPTER 4 - Programming..... 4-3

ARTICLE 1 - General 4-3
ARTICLE 2 - State Legislation and Guidelines 4-4
ARTICLE 3 - State, Regional, and Local Programs 4-6
ARTICLE 4 - Federal Programs 4-9
ARTICLE 5 - State Budget Program Codes 4-15

CHAPTER 5 - Deleted

CHAPTER 6 - Project Cost, Scope, and Schedule Changes 6-3

ARTICLE 1 - General 6-3
ARTICLE 2 - Definition of Terms 6-4
ARTICLE 3 - Scope Changes 6-6
ARTICLE 4 - Cost Changes 6-7
ARTICLE 5 - Schedule Changes 6-9
ARTICLE 6 - Database Management 6-10

CHAPTER 7 - Uniform File System 7-3

SECTION 1 - General Guidelines 7-3
SECTION 2 - Directory and Instructions 7-5

Part 2 – The Project Development Process (Chapters 8 through 15)

CHAPTER 8 - Overview of Project Development 8-5

SECTION 1 - General 8-5
SECTION 2 - Project Development Overview Using Project Milestones 8-9
SECTION 3 - Charging Practices 8-17
SECTION 4 - Project Development Team 8-19
SECTION 5 - Project Development Categories 8-27
SECTION 6 - Project Alternatives 8-37
SECTION 7 - Policies and Procedures that Span the Project Development Process 8-46
ARTICLE 1 - Introduction 8-46
ARTICLE 2 - Right-of-Way Considerations 8-46
ARTICLE 3 - Disposal, Staging, and Borrow 8-48
ARTICLE 4 - Responsibilities of Utility Companies and Other Owners 8-48
ARTICLE 5 - Mobility Considerations 8-50
ARTICLE 6 - Environmental Considerations 8-55
ARTICLE 7 - Owner-Operator Considerations 8-62
ARTICLE 8 - Federal Highway Administration Coordination 8-68

CHAPTER 9 - Project Initiation 9-5

ARTICLE 1 - Introduction and Definitions 9-5
ARTICLE 2 - Laws 9-9
ARTICLE 3 - Policies 9-11
ARTICLE 4 - Essential Procedures 9-14
ARTICLE 5 - Additional State Highway Operation and Protection Program Procedures 9-42
ARTICLE 6 - Director's Order for Urgent Projects 9-47
ARTICLE 7 - Expenditure Authorization Project Report for Minor B and Maintenance Projects 9-48
ARTICLE 8 - Project Initiation Process for Projects-funded-by-others 9-49
ARTICLE 9 - Combined Project Study Report-Project Report 9-58
ARTICLE 10 - Ceasing Work on Programmed Projects 9-61

CHAPTER 10 - Formal Project Studies 10-3

SECTION 1 - General 10-3
SECTION 2 - Engineering Studies 10-6
SECTION 3 - Environmental Studies 10-11
SECTION 4 - Identifying Project Alternatives and Mitigations for Impacts 10-15
SECTION 5 - Draft Project Report 10-22
ARTICLE 1 - General 10-22
ARTICLE 2 - Format and Content 10-24

CHAPTER 11 - Public Hearing 11-5

ARTICLE 1 - The Hearing Process 11-5
ARTICLE 2 - Public Notices and Publicity 11-11
ARTICLE 3 - Map Showings 11-15
ARTICLE 4 - Briefings and Rehearsals 11-16
ARTICLE 5 - Hearing Room Arrangements 11-17
ARTICLE 6 - Presiding Officers 11-18
ARTICLE 7 - Open Forum Hearings 11-20
ARTICLE 8 - Formal Hearings 11-23
ARTICLE 9 - Guidelines for Presentations 11-30
ARTICLE 10 - Exhibits 11-33
ARTICLE 11 - Handouts 11-34
ARTICLE 12 - Record of Public Hearing 11-35

CHAPTER 12 - Project Approvals and Changes to Approved Projects 12-3

SECTION 1 - General 12-3
SECTION 2 - Selecting a Preferred Alternative 12-5
SECTION 3 - Project Report Approves Projects 12-8
ARTICLE 1 - General 12-8
ARTICLE 2 - Documenting the Preferred Alternative 12-10
ARTICLE 3 - Caltrans' Project Approval Process 12-11
SECTION 4 - Other Caltrans Reports that Approve Projects 12-13
SECTION 5 - Federal Highway Administration and
California Transportation Commission Approval of Projects 12-18
SECTION 6 - Changes to Approved Projects 12-21

CHAPTER 13 - Project Related Permits, Licenses, Agreements, Certifications, and Approvals 13-5

ARTICLE 1 - Introduction and Definitions 13-5
ARTICLE 2 - Securing Governmental Consent to Projects 13-7
ARTICLE 3 - Permits and Approvals 13-10
ARTICLE 4 - Cooperative Agreements and Similar Agreements 13-19
ARTICLE 5 - Maintenance Agreements 13-21
ARTICLE 6 - Route Adoptions 13-22
ARTICLE 7 - FreewayAgreements and Controlled Access
Highway Agreements 13-23
ARTICLE 8 - Relinquishments 13-24
ARTICLE 9 - Disposal of Rights-of-Way 13-25
ARTICLE 10 - Public Road Connections 13-26
ARTICLE 11 - Resolutions of Necessity for Condemnation 13-27

CHAPTER 14 - Preparation of Project Plans 14-3

SECTION 1 - General 14-3
SECTION 2 - Preliminary Plans 14-5
ARTICLE 1 - General 14-5
ARTICLE 2 - Geometric Base Maps 14-9
ARTICLE 3 - Cross-Sections 14-10
ARTICLE 4 - Bridge Site Data Submittal 14-11
ARTICLE 5 - Right-of-Way Submittal 14-12
ARTICLE 6 - Skeleton Layouts 14-13
SECTION 3 - Final Plans 14-14
ARTICLE 1 - General 14-14
ARTICLE 2 - Final Maps to Right-of-Way 14-14
ARTICLE 3 - Bridge General Plans 14-15
ARTICLE 4 - The Project Plans 14-16
ARTICLE 5 - Final Quantities 14-17
SECTION 4 - Plans, Specifications, and Estimate Submittal 14-18
ARTICLE 1 - General 14-18
ARTICLE 2 - Environmental Reevaluation 14-20
ARTICLE 3 – Right-of-Way Certification 14-21
ARTICLE 4 - Preparation of Contract Documents 14-22

CHAPTER 15 - Final Project Development Procedures 15-3

SECTION 1 - Contract Procedures 15-3
SECTION 2 - Construction 15-5
SECTION 3 - Project Completion 15-8

CHAPTER 16 - Cooperative Agreements 16-3

ARTICLE 1 - Introduction and Definitions 16-3
ARTICLE 2 - Laws 16-7
ARTICLE 3 - Policies 16-8
ARTICLE 4 - Essential Procedures 16-9

Part 3 – Specific Project Development Procedures (Chapters 16 through 32)

CHAPTER 17 - Encroachments and Utilities 17-3

SECTION 1 - Encroachments 17-3
ARTICLE 1 - General 17-3
ARTICLE 2 - Definitions 17-4
ARTICLE 3 - Laws 17-7
ARTICLE 4 - Encroachment Policies 17-14
ARTICLE 5 - Access Restrictions 17-20
SECTION - Utility Policies 17-22
ARTICLE 1 - General 17-22
ARTICLE 2 - Policies 17-22
ARTICLE 3 - Locating Requirements 17-25
ARTICLE 4 - Clearance and Offset Requirements 17-28
ARTICLE 5 - Alternatives to Relocation 17-30
ARTICLE 6 - Certify Policy Compliance 17-30
ARTICLE 7 - Installations by Encroachment Permit 17-31
ARTICLE 8 - Retention of Records 17-32
SECTION 3 - Exception Requests 17-33

CHAPTER 18 - Environmental Contamination 18-3

ARTICLE 1 - General 18-3
ARTICLE 2 - Applicable Laws, Regulations, and Regulatory Agencies 18-5
ARTICLE 3 - Policies 18-9
ARTICLE 4 - Procedures 18-15

CHAPTER 19 - Value Analysis 19-3

ARTICLE 1 - Introduction and Definitions 19-3
ARTICLE 2 - Federal Statutes 19-6
ARTICLE 3 - Policies 19-7
ARTICLE 4 - Benefits of Value Analysis 19-8
ARTICLE 5 - Value Analysis Application 19-11
ARTICLE 6 - Value Analysis Roles and Responsibilities 19-12
ARTICLE 7 - Value Analysis Process and Procedures 19-21
ARTICLE 8 - Value Analysis Study Charging Details 19-33
ARTICLE 9 - Value Analysis Program Reporting 19-34

CHAPTER 20 - Project Development Cost Estimates 20-3

SECTION 1 - Project Cost Estimating 20-3
ARTICLE 1 - General 20-3
ARTICLE 2 - Policies 20-4
ARTICLE 3 - Current Project Cost Estimate 20-6
ARTICLE 4 - Responsibilities 20-6
ARTICLE 5 - Coordination with Other Functional Units and Agencies 20-9
SECTION 2 - Project Planning Cost Estimates 20-11
ARTICLE 1 - General 20-11
ARTICLE 2 - Project Feasibility Cost Estimate 20-11
ARTICLE 3 - Project Initiation Cost Estimate 20-13
ARTICLE 4 - Draft Project Report Cost Estimate 20-14
ARTICLE 5 - Project Report Cost Estimate 20-15
SECTION 3 - Project Design Cost Estimates 20-16
ARTICLE 1 - General 20-16
ARTICLE 2 - Transitioning from Project Planning to Project Design Cost Estimates 20-17
ARTICLE 3 - Basic Engineering Estimating System 20-17
ARTICLE 4 - Preliminary Engineer's Cost Estimate 20-20
ARTICLE 5 - Final Engineer's Cost Estimate 20-21

CHAPTER 21 - Exceptions to Design Standards 21-3

ARTICLE 1 - General 21-3
ARTICLE 2 - Exceptions to Mandatory Design Standards 21-7
ARTICLE 3 - Exceptions to Vertical Clearance on Department of Defense Rural and Single Interstate Route System 21-12
ARTICLE 4 - Exceptions to Delegated Mandatory Standards and Advisory Design Standards 21-13

CHAPTER 22 - Community Involvement 22-3

ARTICLE 1 - General 22-3
ARTICLE 2 - Securing Community Consent to Projects 22-3
ARTICLE 3 - Community Involvement Plans 22-4
ARTICLE 4 - Initial Meetings 22-5
ARTICLE 5 - Principles and Techniques for Community Involvement 22-7
ARTICLE 6 - Meeting Formats 22-9
ARTICLE 7 - Citizen Advisory Committees 22-17
ARTICLE 8 - Newsletters 22-18
ARTICLE 9 - Written Notification of Initiation of Studies 22-19
ARTICLE 10 - Media Relations 22-21

CHAPTER 23 - Route Adoptions 23-3

ARTICLE 1 - General 23-3
ARTICLE 2 - Freeways 23-7
ARTICLE 3 - Controlled Access Highways 23-7
ARTICLE 4 - Conventional Highways 23-9
ARTICLE 5 - Traversable Highway, Transfer of Highway Location 23-9
ARTICLE 6 - Temporary Connections 23-14
ARTICLE 7 - Route Redesignation 23-15
ARTICLE 8 - Modification to Adopted Route Locations 23-16
ARTICLE 9 - State Route Rescission Process 23-18
ARTICLE 10 - Deletion from Freeway and Expressway System 23-24

CHAPTER 24 - Freeway Agreements 24-3

ARTICLE 1 - Introduction and Definitions 24-3
ARTICLE 2 - Laws 24-5
ARTICLE 3 - Policies 24-8
ARTICLE 4 - General 24-12
ARTICLE 5 - Essential Procedures 24-14
ARTICLE 6 - Freeway Agreement Format 24-20
ARTICLE 7 - Freeway Agreement Exhibit Maps 24-21
ARTICLE 8 - Resolutions of Change 24-27

CHAPTER 25 - Relinquishments 25-3

ARTICLE 1 - Introduction and Definitions 25-3
ARTICLE 2 - Laws 25-6
ARTICLE 3 - Policies 25-8
ARTICLE 4 - Essential Procedures 25-11
ARTICLE 5 - Conflict Resolution Process 25-24

CHAPTER 26 - Disposal of Rights-of-Way for Public or Private Road Connections 26-3

ARTICLE 1 - General 26-3
ARTICLE 2 - Definitions 26-3
ARTICLE 3 - Laws 26-4
ARTICLE 4 - Policy 26-5
ARTICLE 5 - Essential Procedures 26-5

CHAPTER 27 - Access Control Modification 27-3

ARTICLE 1 - Introduction and Definitions 27-3
ARTICLE 2 - Laws 27-6
ARTICLE 3 - Policies 27-12
ARTICLE 4 - Essential Procedures 27-24
ARTICLE 5 - Interstate System 27-29

CHAPTER 28 - Resolutions of Necessity 28-3

ARTICLE 1 - General 28-3
ARTICLE 2 - Statutes 28-3
ARTICLE 3 - Policy 28-4
ARTICLE 4 - Procedures 28-5

CHAPTER 29 - Landscape Architecture 29-7

SECTION 1 - General 29-7
SECTION 2 - Highway Planting 29-12
ARTICLE 1 - Definitions, General Policy, and Programs 29-12
ARTICLE 2 - Responsibilities 29-18
ARTICLE 3 - Participation by Others 29-24
ARTICLE 4 - Project Development Process 29-28
SECTION 3 - Safety Roadside Rest Areas 29-40
ARTICLE 1 - Definitions, General Policy, and Programs 29-40
ARTICLE 2 - Responsibilities 29-48
ARTICLE 3 - Project Development Process 29-53
ARTICLE 4 - Closure 29-59
ARTICLE 5 - References 29-62
SECTION 4 - Vista Points 29-63
ARTICLE 1 - General Policy 29-63
ARTICLE 2 - Project Development Process 29-65
ARTICLE 3 - References 29-65
SECTION 5 - Park-and-Ride Facilities 29-66
ARTICLE 1 - General Policy 29-66
ARTICLE 2 - References 29-68
SECTION 6 - Aesthetics 29-69
SECTION 7 - Blue Star Memorial Highways 29-71
ARTICLE 1 - Purpose and General Policy 29-71
ARTICLE 2 - Responsibilities 29-71
ARTICLE 3 - Guidelines 29-72
SECTION 8 - Scenic Highways and Byways 29-74
ARTICLE 1 - General Policy and Program 29-74
ARTICLE 2 - Designation and Design Considerations 29-75
SECTION 9 - Transportation Art 29-79
ARTICLE 1 - General Procedure 29-79
ARTICLE 2 - Responsibilities 29-83

ARTICLE 3 - Project Development Process 29-86
SECTION 10 - Community Identification 29-90
ARTICLE 1 - General Procedure 29-90
ARTICLE 2 - Responsibilities 29-93
ARTICLE 3 - Project Development Process 29-96
SECTION 11 - Gateway Monuments 29-101
ARTICLE 1 - General Procedure 29-101
ARTICLE 2 - Responsibilities 29-104
ARTICLE 3 - Project Development Process 29-107

CHAPTER 30 - Highway Traffic Noise Abatement 30-3

SECTION 1 - General Policy 30-3
SECTION 2 - New Highway Construction or Reconstruction 30-14
SECTION 3 - Retrofit Noise Barriers on Existing Freeways 30-19
SECTION 4 - School Noise Abatement Projects 30-23

CHAPTER 31 - Nonmotorized Transportation Facilities 31-3

SECTION 1 - General 31-3
SECTION 2 - Application 31-5
ARTICLE 1 - Routes Severed by Freeways 31-5
ARTICLE 2 - New Corridors 31-6
ARTICLE 3 - Cooperative Projects 31-7
ARTICLE 4 - State Projects 31-8
SECTION 3 - Planning Guidelines 31-9
SECTION 4 - Design Guidelines 31-12
SECTION 5 - Approvals 31-15

CHAPTER 32 - Lands and Buildings Facilities 32-3

ARTICLE 1 - General 32-3

Project Development Initiation and Approval Reports (Appendices A through X)

APPENDIX A - Preparation Guidelines for Project Study Report-Project Report . A-3

APPENDIX B - Preparation Guidelines for Expenditure Authorization Project Report B-3

APPENDIX C - Preparation Guidelines for Facility Project Study Report (Lands and Buildings) C-3

APPENDIX D - Preparation Guidelines for Project Report (New Highway Planting or Roadside Rehabilitation) D-3

APPENDIX E - Preparation Guidelines for Project Study Report Data Sheet (New Highway Planting or Highway Planting Restoration).....E-3

APPENDIX F - Deleted

APPENDIX G - Preparation Guidelines for Project Scope Summary Report (Roadway Rehabilitation) G-3

APPENDIX H - Preparation Guidelines for Capital Preventive Maintenance Project Report..... H-3

APPENDIX I - Preparation Guidelines for Permit Engineering Evaluation Report ..I-3

APPENDIX J - Deleted

APPENDIX K - Preparation Guidelines for Project Report..... K-3

APPENDIX L - Preparation Guidelines for Project Study Report.....L-3

APPENDIX M - Preparation Guidelines for Project Report (Safety Roadside Rest Area).....M-3

APPENDIX N - Deleted

APPENDIX O - Deleted

APPENDIX P - Preparation Guidelines for Project Scope Summary Report (Structure Rehabilitation).....P-3

APPENDIX Q - Preparation Guidelines for Project Report (Roadside Safety Improvements) Q-3

APPENDIX R - Small Capital Value Projects Project Initiation Document.....R-3

APPENDIX S - Preparation Guidelines for Project Study Report-Project Development Support Project Initiation Document S-3

APPENDIX T - Preparation Guidelines for Bridge Maintenance Project Scope Summary Report T-3

APPENDIX X - Preparation Guidelines for Project Study Report (Safety Roadside Rest Area)..... X-3

Project Development Forms and Letters plus Policy and Procedures Documents (Appendices BB through QQ)

APPENDIX AA - Deleted

APPENDIX BB - Fact Sheets for Exceptions to Mandatory Design Standards..... BB-3

APPENDIX CC - Preparation Guidelines for Freeway Agreement CC-3

APPENDIX DD - Hazardous Waste..... DD-3

APPENDIX EE - Highway Planting “One Liner” and Design Intent Statement (DIS)..... EE-3

APPENDIX FF - Deleted

APPENDIX GG - Project Data Checklists GG-3

APPENDIX HH - Public Involvement HH-3

APPENDIX II - Rescissions II-3

APPENDIX JJ - Resolutions of Necessity..... JJ-3

APPENDIX KK - Deleted

APPENDIX LL - Utility Policy Certification and Utility Matrix..... LL-3

APPENDIX MM - Deleted

APPENDIX NN - Deleted

APPENDIX OO - Deleted

APPENDIX QQ - Preparation Guidelines for Survey File..... QQ-3

Part 1

General Information

CHAPTER 1 – Introduction

Table of Contents

CHAPTER 1 – Introduction 1-3
SECTION 1 About this Manual 1-3
Reference Information 1-3
Purpose 1-3
Defining the Project Development Process 1-3
Historical Background 1-3
Current Release 1-4
Implements Laws and Policies 1-4
Provides Guidance 1-4
Special Situations 1-5
Mandatory Procedural Requirements 1-5
SECTION 2 Related Manuals and Guidelines 1-6
Headquarters Division of Design Manuals and Guidelines Relating to Project Planning and Design 1-6
Other Caltrans Manuals and Guidelines 1-6
Other Manuals and Guidelines 1-10
SECTION 3 Abbreviations Used in this Manual 1-11
SECTION 4 Transportation Planning Leads to Project Development 1-21
ARTICLE 1 General 1-21
Planning Coordination 1-21
Region and System Planning 1-21
Intermodal Surface Transportation Efficiency Act of 1991 1-21
ARTICLE 2 Transportation Systems 1-22
Transportation Systems 1-22
Roadway Systems 1-22
State Highway System 1-22
Subsystems 1-22
Federal Systems 1-23
ARTICLE 3 Regional and System Planning 1-24
Continuing, Comprehensive, Cooperative Planning 1-24
State System Planning 1-24
Management Systems 1-29
Master Plans 1-32
Priority Lists 1-32
State Highway Inventory 1-33
Regional Transportation Planning 1-33

Air Quality Conformity 1-34
Planning Concept 1-34
Planning Scope 1-34
Major Investment Studies 1-35
District Input to Regional Transportation Plans 1-35
Regional Transportation Plan Purpose 1-35
Memorandum of Understanding Integrating the National Environmental Policy Act and Section 404 Processes 1-37
Local Transportation Planning 1-38
Goods Movement 1-38
Other Plans 1-38
ARTICLE 4 Corridor Planning 1-38
Corridor Policy 1-38
Corridor Preservation 1-39
Corridor Preservation Process 1-39
SECTION 5 Project Development Philosophy 1-41
Balanced Transportation Projects 1-41
Various Perspectives Considered 1-41
Implementation 1-41

Table of Figures

FIGURE 1-1 Metropolitan Planning Organizations 1-26
FIGURE 1-2 Regional Transportation Planning Agencies 1-27

CHAPTER 1 – Introduction

SECTION 1 About this Manual

Reference Information

Some of the references found in this chapter have hyperlinks that connect to Caltrans intranet pages which are not displayable to the general public. Until such time that the specific reference becomes available on the internet, the user will have to contact their district liaison, Caltrans project manager, or the appropriate Headquarters division to inquire about the availability of the reference.

Purpose

The Headquarters Division of Design (DOD) has the responsibility for the development and consistent application of Caltrans' policies for the project development process. It maintains this manual, the Project Development Procedures Manual (PDPM), to provide guidance for project development on State Highway System projects. Emphasis of the PDPM is directed toward State highway projects; however, projects on local transportation systems and other modes are also discussed.

Defining the Project Development Process

For the purposes of this manual, the project development process is defined as spanning those activities and that time frame that commence with project initiation and end with the assembly of the Final Project Records after project construction.

Historical Background

The original PDPM (Gold Book) was written to provide instructions for implementing the State highway project development process outlined in the California Action Plan for Transportation Planning and Development, published in June, 1973.

The Action Plan was developed in compliance with Federal requirements stated in *Title 23 United States Code*, Section 109 (h), and with its implementing memorandum issued by the Federal Highway Administration (FHWA). The purpose of this Action

Plan was to provide a process to assure the consideration of economic, social, and environmental effects of transportation projects in parallel with engineering and technical aspects. It provided guidelines and procedures for implementing two related pieces of legislation: the *National Environmental Policy Act of 1969* (NEPA) and the *California Environment Quality Act of 1970* (CEQA). The Action Plan is no longer in effect as an official document, but its basic requirements are still in force and are included in the PDPM.

Current Release

This seventh edition of the PDPM represents a reformatting of the sixth edition of the "Gold Book," with changes to bring it up-to-date with the current organization of Caltrans and other revisions to make it current. It conforms to the layout of the sixth edition, which represented an entire rewrite of the "Gold Book" that brought it up to date with current policies and legislation. It reflects the July 1988 (and subsequent) delegations of authority for project development to the District Directors. It focuses on the integral role of Caltrans' project development philosophy as it relates to the project development process. This new release is intended to supersede all previous editions and changes to the PDPM. It is intended to complement the *Project Development Workflow Tasks Manual*, which describes "typical" project development tasks that occur during the project development process.

Implements Laws and Policies

The PDPM reiterates many State and federal laws and policies that affect the development of transportation projects in California; however, it is federal laws (statutes and regulations), Executive Orders, U.S. Department of Transportation and FHWA and other federal regulations, California law (statutes and regulations), as well as Caltrans' Director's Policy Memoranda and Deputy Directives that establish the legal requirements and policies used by Caltrans to carry out project development functions. The PDPM is not intended to establish legal standard for these functions, nor does it impose legal requirements different from, or in addition to, those imposed by law. In many cases, specific statutes have been quoted; however, there has been no attempt to include a complete listing of all applicable laws or regulations.

Provides Guidance

The processes and procedures established in this manual are provided for the information and guidance of the officers and employees of Caltrans, as well as for

any local entity, private developer, or consultant engaged in project development activities involving California state highways. It is not intended that any standard of conduct or duty toward the public shall be created or imposed by this manual.

Statements specifying duties and responsibilities of any given classification of officers or employees mentioned herein refer solely to duties or responsibilities of such classification to their management, to various members of the project development team, or to their relationships with organizational units in Caltrans.

There is also no intent to impose organizational requirements on any Caltrans district beyond that which is already established by the Caltrans policy process.

Special Situations

Many of the processes and procedures in this manual are subject to change as circumstance and experience warrant. Special situations may dictate a prudent variation (within legal limitations) from a requirement; such a variation is subject to approval by the District Director, by the Headquarters Division of Design Division Chief (if specifically required), or by some other approval authority (where specifically provided for).

Mandatory Procedural Requirements

Within the constraints described above, this manual uses the word “must” to indicate mandatory project development procedures and policies for which Caltrans is responsible. Procedures and actions to be performed by others (subject to notification by Caltrans), or statements of fact, are indicated by the word “will.” Other procedural statements in the manual are meant to be descriptive of the recommended or customary process and use a nonmandatory verb.

SECTION 2 Related Manuals and Guidelines

Headquarters Division of Design Manuals and Guidelines Relating to Project Planning and Design

In addition to the Project Development Procedures Manual, Headquarters Division of Design is responsible for the following manuals and guidelines:

- *Highway Design Manual*
  Provides guidance on design standards, policies, and procedures that are to be followed on projects on the State Highway System.

- *Landscape Architecture PS&E Guide*
  Establishes uniform standards and procedures for preparation of landscape architecture plans, specifications, and estimate.

  Prepared by the Headquarters Division of Design-Landscape Architecture Program.

- *Project Development Workflow Tasks Manual*
  Provides flowcharts and detailed descriptions of project development tasks from project initiation through final report on the completed project. It is designed to be used independently or as a companion to the PDPM.

- *Scenic Highway Guidelines*
  Describes the process for officially designating scenic highways or revoking scenic highways designation.

  Prepared by the Headquarters Division of Design-Landscape Architecture Program.

- *Storm Water Quality Handbooks: Project Planning and Design Guide*
  Provides a guide for incorporating stormwater quality controls into a project.

Other Caltrans Manuals and Guidelines

Other manuals and guidelines applicable to the project development process are also referenced in this manual. They include:

- *Basic Engineering Estimating System (BEES)*
  Provides aid to the project engineer in the preparation of the estimate of cost.

Prepared by the Headquarters Division of Information Technology-IT Solutions Division.

- *CADD Users Manual*
  Establishes uniform data-entry procedures for roadway design and drafting work performed on the Caltrans computer-aided design and drafting (CADD) system.

  Prepared by the Headquarters Division of Design.

- *California Manual on Uniform Traffic Control Devices (California MUTCD)*
  Covers all traffic control device topics.

  Prepared by the Headquarters Division of Traffic Operations.

- *Caltrans Project Management Handbook*.
  Contains procedures for project management and evaluation.

  Prepared by the Headquarters Division of Project Management.

- *Capital Outlay Support (COS) Charging Practice Guidelines*
  Provides detailed information on charging practices.

  Prepared by the Headquarters Division of Project Management.

- *Coding Manual (Volume 1)*
  Contains codes and coding procedures used for the accounting and management system

  Prepared by the Headquarters Division of Accounting.

- *Construction Manual*
  Establishes policies and procedures for the construction phase of contract work. Describes the duties of field personnel assigned to construction projects.

  Prepared by the Headquarters Division of Construction-Office of Construction Support.

- *Contract Managers Handbook*
  Provides procedures for preparing and administering contracts for services.

  Prepared by the Headquarters Division of Administration-Division of Procurement and Contracts.

- *Cooperative Agreement Manual*
  Covers procedures for cooperative agreements with local agencies, as well as highway agreements with private parties.

- *Encroachment Permits Manual*
  Establishes uniform methods and procedures for issuing encroachment permits.

- *Engineering Services Manuals*
  The website includes various resources used to design bridges.

  Issued by the Headquarters Division of Engineering Services-Structure Design:

- *High-Occupancy Vehicle Guidelines*
  Covers the development of high-occupancy vehicle (HOV) facilities.

  Prepared by the Headquarters Division of Traffic Operations, in cooperation with Headquarters Division of Design.

- *Local Assistance Procedures Manual*
  Outlines policy and procedures for project development for local Federal-aid and local State-aid projects on local-agency transportation systems.

  Prepared by the Headquarters Division of Local Assistance.

- *Local Development-Intergovernmental Review*
  Used to guide Caltrans reviews and comments on the environmental documents of development proposals, plans, programs, and projects of other agencies.

  Prepared by the Headquarters Division of Transportation Planning.

- *Maintenance Manual*
  Describes procedures relating to the maintenance of State highways.

  Prepared by the Headquarters Division of Maintenance.

- *Plans Preparation Manual*
  Provides guidance in the preparation of engineering drawings.

  Prepared by the Headquarters Division of Design.

  Prepared by the Headquarters Division of Traffic Operations-Office of Encroachment Permits and Engineering Support.

- *Project Risk Management Handbook: A Scalable Approach*
  Contains risk management requirements and procedures for capital outlay projects and major maintenance projects.

  Prepared by the Headquarters Division of Project Management.

- *Ramp Meter Design Manual*
  Covers development of ramp metering facilities.

  Prepared by the Headquarters Division of Traffic Operations, in cooperation with Headquarters Division of Design.

- *Ready to List and Construction Contract Award Guide (RTL Guide)*
  Developed to establish uniform procedures for preparation of plans, specifications, and estimate (PS&E) submittals for all projects on the State Highway System.

  Prepared by the Headquarters Division of Engineering Services-Office Engineer.

- *Right of Way Manual*
  Covers policies and procedures relating to right-of-way requirements.

  Prepared by the Headquarters Division of Right of Way and Land Surveys.

- *Safety Manual*
  Contains safety and health practices to be used on the job.

  Prepared by the Headquarters Division of Administration-Division of Safety and Management Services.

- *Standard Environmental Reference*
  Discusses social, economic, and environmental considerations that are an integral but specialized part of the highway development process. Detailed policies and procedures are included.

  Prepared by the Headquarters Division of Environmental Analysis.

- *Standard Plans* and *Standard Specifications*
  Used to prepare the plans, specifications, and estimate for projects on the State Highway System.

  Prepared by the Headquarters Division of Engineering Services-Office Engineer.

- *Surveys Manual*
  Contains surveying procedures.

  Prepared by the Headquarters Division of Right of Way and Land Surveys.

- *Traffic Manual*
  Covers all non-traffic control device topics.

  Prepared by the Headquarters Division of Traffic Operations.

- *Transportation Management Plan Guidelines*
  Establishes procedures and responsibilities for preparing transportation management plans during project development.

  Prepared by the Headquarters Division of Traffic Operations.

- *User's Guide to Photogrammetric Products and Services*
  Describes how to obtain mapping and other services.

  Prepared by the Headquarters Division of Engineering Services-Structure Design Office of Photogrammetry and Preliminary Investigations.

- *Workplan Standards Guide, Release 11.0 For Capital Outlay Projects*
  Describes the work breakdown structure to be used for all capital outlay support work.

  Prepared by the Headquarters Division of Project Management.

- *2010 California Regional Transportation Plan Guidelines*
  Used by regional transportation planning agencies to prepare their regional transportation plans.

  Prepared by the Headquarters Division of Transportation Planning.

Other Manuals and Guidelines

Other publications applicable to the project development process are also referenced in this manual. They include:

- *Highway Capacity Manual*
  Describes capacity analysis techniques.

  Published by the Transportation Research Board.

SECTION 3 Abbreviations Used in this Manual

AADT	Annual Average Daily Traffic
AASHTO	American Association of State Highway and Transportation Officials
AC	Asphalt Concrete
ADA	Americans with Disabilities Act (Federal)
ADT	Average Daily Traffic
AIS	Appearance Information Sheet
APS	Advance Planning Study
ASCE	American Society of Civil Engineers
AQMD	Air Quality Management District
BCDC	(San Francisco) Bay Conservation and Development Commission (State: Districts 4 and 10)
BEES	Basic Engineering Estimating System
BIRIS	Bridge Inspection Retrieval Information System
BMPs	Best Management Practices
BR	Bridge Restoration and Replacement Program (Federal)
CA	1. California 2. Cooperative Agreement
CADD	Computer-aided Design and Drafting
CALNET	California Integrated Telecommunications Network
CAM	Cooperative Agreement Manual
CAPM	Capital Preventive Maintenance
CAR	Cooperative Agreement Report

CCA	Construction Contract Acceptance
CCO	Contract Change Order
CE	1. Categorical Exemption (CEQA) 2. Categorical Exclusion (NEPA)
CEC	Caltrans Encroachment Committee (Obsolete)
CEQA	California Environmental Quality Act (State)
CFR	Code of Federal Regulations
CHP	Department of California Highway Patrol (State)
CMA	Congestion Management Agency
CMAQ	Congestion Mitigation and Air Quality Program (Federal)
CMP	Congestion Management Program
Co	County
COG	Council of Governments
CR	Constructability Review
CRIP	Cost Reduction Incentive Proposal
CSMP	Corridor System Management Plan
CSS	Context-sensitive-solutions
CT	Caltrans
CTC	California Transportation Commission (State)
CTP	California Transportation Plan
DAF	Damage Assessment Form (Federal)
dBA	Decibel-A Scale
DBR	Discretionary BR (Federal)
DCC	Draft Construction Contract
DCR	Draft Contract Ready

DD	District Director
DDD	Deputy District Director
DED	Draft Environmental Document
DEIR	Draft Environmental Impact Report (CEQA)
DEIS	Draft Environmental Impact Statement (NEPA)
DHV	Design Hourly Volume
DIS	Design Intent Statement
DO	Director's Order
DOD	1. Division of Design (Caltrans Headquarters) 2. Department of Defense (Federal)
DOT	Department of Transportation (Federal)
DPR	Draft Project Report
DRS	Document Retrieval System
DTM	Digital Terrain Model
EA	1. Environmental Assessment (NEPA) 2. Expenditure Authorization
EAG	Encroachment Advisory Group
ED	Environmental Document
EDP	Electronic Data Processing
EEM	Environmental Enhancement and Mitigation (State)
EIR	Environmental Impact Report (CEQA)
EIS	Environmental Impact Statement (NEPA)
EPA	Environmental Protection Agency (Federal)
ER	Emergency Relief Program (Federal)
ESAL	Equivalent Single-Axle Load

FAST	Function Analysis System Technique
FED	Final Environmental Document
FEIR	Final Environmental Impact Report (CEQA)
FEIS	Final Environmental Impact Statement (NEPA)
FEMA	Federal Emergency Management Agency (Federal)
FHWA	Federal Highway Administration (Federal)
FONSI	Finding of No Significant Impact (NEPA)
FRIS	Final Relocation Impact Study/Statement
FSTIP	Federal State Transportation Improvement Program (Federal)
FTIP	Federal Transportation Improvement Program (Federal)
FY	Fiscal Year
F&E System	Freeway and Expressway System
GIS	Geographic Information System
HDM	Highway Design Manual
HES	Hazard Elimination Safety Program (Federal)
HIA	Highway Improvement Agreement
HOT	High-occupancy Toll
HOV	High-occupancy Vehicle
HP	Highway Planting
HPP	High Profile Project
HPSR	Historic Properties Survey Report
HP&R	Highway Planting and Restoration
HQ	Headquarters (Caltrans)
HW	Hazardous Waste

HWMP	Hazardous Waste Management Plan
IC	Interstate Completion Program (Federal)
IGR	Intergovernmental Review
IIP	Interregional Improvement Program (State)
IM	Interstate Maintenance Program (Federal)
IRR	Intercity Rail Program (State)
IRRS	Interregional Road System (State)
IRS	Interregional Road System Program (State)
IS	Initial Study (CEQA)
ISA	Initial Site Assessment
ISTEA	Intermodal Surface Transportation Efficiency Act of 1991 (Federal)
ITIP	Interregional Transportation Improvement Program (State)
ITMS	Intermodal Transportation Management System
ITS	Intelligent Transportation Systems
ITSP	Interregional Transportation Strategic Plan
LA	Landscape Architect
LAAPS	Local Agency Automated Pay System
LEED	Leadership in Energy and Environmental Design
LEDPA	Least Environmentally Damaging, Practicable Alternative
Leq	Equivalent Sound Level
LOC	Locally Funded State Highway Projects
LOS	Level of Service
LRTP	Long-range Transportation Plan
MIS	Major Investment Study

MND	Mitigated Negative Declaration (CEQA)
MOA	Memorandum of Agreement
MOU	Memorandum of Understanding
MPO	Metropolitan Planning Organization
MSDS	Material Safety Data Sheet
NAC	Noise Abatement Criteria
NADR	Noise Abatement Decision Report
ND	Negative Declaration (CEQA)
NEPA	National Environmental Policy Act (Federal)
NH	National Highway System Program (Federal)
NHS	National Highway System
NOD	Notice of Determination (CEQA)
NOI	Notice of Intent (NEPA)
NOP	Notice of Preparation (CEQA)
NPDES	National Pollutant Discharge Elimination System
NTO	Notice to Owner
OA	Obligation Authority (Federal)
OHC	Other Highway Construction Program (State)
OJT	On-the-job Training
PACT	Project Agreement Construction Tool
PAR	1. Project Approval Report (obsolete) 2. Project Authorization Request (obsolete)
PA&ED	Project Approval and Environmental Document
PCC	Portland Cement Concrete
PCR	Project Change Request

PD	Project Development
PDPM	Project Development Procedures Manual
PDT	Project Development Team
PE	Project Engineer
PEAR	Preliminary Environmental Analysis Report
PEER	Permit Engineering Evaluation Report
PHF	Project History File
PID	Project Initiation Document
PISA	Project Information Systems and Analysis
PLAC	Permits, Licenses, Agreements, Certifications
PM	1. Post Mile 2. Project Manager
PMCS	Project Management Control System
PMS	Pavement Management System
PPNO	Planning Program Number
PPR	Project Programming Request
PR	Project Report
PSR	Project Study Report
PSR-PDS	Project Study Report-Project Project Development Support
PSR-PR	Project Study Report-Project Report
PSSR	Project Scope Summary Report
PSTIP	Proposed State Transportation Improvement Program
PS&E	Plans, Specifications, and Estimate
PUC	Public Utilities Commission (State)
PY	Personnel Year

PYPSCAN	Person Year and Project Schedule and Cost Analysis
P3	Public-private Partnership
RAP	1. Relocation Assistance Program 2. Remedial Action Plan
RAR	Relinquishment Assessment Report
RAS	Rehabilitation and Safety Program (State)
RCE	Registered Civil Engineer
RCR	Route Concept Report
RE	Resident Engineer
RFP	Request For Proposal
RFQ	Request For Qualifications
RI	Remedial Investigation
RICS	Remote Irrigation Control System
RIP	Regional Improvement Program (State)
RIS	Relinquishment Information Sheet
ROD	Record of Decision (NEPA)
RON	Resolution of Necessity
ROWM	Right of Way Manual
RRC	Relinquishment Resolution Committee
RRR	Resurfacing, Restoration, Rehabilitation (3R)
RRRR	Resurfacing, Restoration, Rehabilitation, Reconstruction (4R)
RSTP	Regional Surface Transportation Program (Federal)
RTIP	Regional Transportation Improvement Program (State)
RTL	Ready to List
RTP	Regional Transportation Plan

RTPA	Regional Transportation Planning Agency
RU	Responsible Unit
RWQCB	Regional Water Quality Control Board (State)
R/W	Right-of-Way
SAFETEA-LU	Safe, Accountable, Flexible, Efficient Transportation Equity Act: A Legacy for Users
SAM	State Administrative Manual
SER	Standard Environmental Reference
SCVP	Small Capital Value Project
SDDCTEA	Surface Deployment and Distribution Command Transportation Engineering Agency (Department of Defense)
SFY	State Fiscal Year
SHOPP	State Highway Operation and Protection Program
SHS	State Highway System
SI	Safety Index
SIP	State Implementation Plan
SMARA	Surface Mining and Reclamation Act (State)
SRRA	Safety Roadside Rest Area
SRTP	Short Range Transit Plan
SSPs	Standard Special Provisions
STIP	State Transportation Improvement Program
STP	Surface Transportation Program (Federal)
STRAIN	Structures Replacement and Improvement Needs
SW	Soundwall Program (State)
SWDR	Storm Water Data Report

SWPPP	Storm Water Pollution Prevention Plan
TASAS	Traffic Accident Surveillance Analysis System
TCI	Transit Capital Improvement Program (State)
TCR	Transportation Concept Report
TE	Transportation Enhancement
TEA	Transportation Enhancement Activities Program (Federal)
TI	Traffic Index
TIP	Transportation Improvement Program
TMP	Transportation Management Plan
TRB	Transportation Research Board
TRPA	Tahoe Regional Planning Agency
TSDP	Transportation System Development Program
TSM	Transportation System Management
UEW	Utility Engineering Workgroup
UNPAR	Un-Project Authorization Request
USC	United States Code (Federal)
USGS	United States Geologic Survey (Federal)
U.S.	United States
VA	Value Analysis
VE	Value Engineering
VIA	Visual Impact Assessment
WASHTO	Western Association of State Highway Transportation Officials
WBS	Work Breakdown Structure

SECTION 4 Transportation Planning Leads to Project Development

ARTICLE 1 General

Planning Coordination

System and regional transportation planning analysis and studies precede initiation of studies of a specific transportation improvement project. These activities coordinate State transportation planning with local and regional transportation planning activities. These State and regional planning activities result in the identification of transportation issues and needs; proposed service, or project alternatives, to respond to issues and needs; agreement among the interested parties on the appropriate course of action; and consensus of the public and other agencies.

Region and System Planning

Regional transportation planning facilitates the development of long-range transportation plans in metropolitan and in non-metropolitan areas. Transportation system planning is critical to identifying State issues and interests on and off the State Highway System. Together regional and system planning provide the State the ability to assess the performance of transportation facilities and systems, propose resolution and seek consensus.

Intermodal Surface Transportation Efficiency Act of 1991

The *Intermodal Surface Transportation Efficiency Act of 1991* (ISTEA) expands the federal planning requirements in *Title 23 United States Code*. The *Intermodal Surface Transportation Efficiency Act of 1991* increases the inter-modal and multi-modal aspects of transportation planning. It provides a more level basis to assess and evaluate alternative modes and projects and seek consensus. Some of the features of the *Intermodal Surface Transportation Efficiency Act of 1991* include requirements for management systems, a State Transportation Plan, and fiscal constraint.

ARTICLE 2 Transportation Systems

Transportation Systems

Transportation systems are identified and defined by the State Legislature, other government agencies such as cities or counties, public mass transit operators, and by private corporations, such as railroad companies.

Specific agencies or corporations are usually responsible for developing, operating, maintaining and revising the system, and for tort liability. Caltrans as the owner-operator is responsible for State highways. Caltrans is involved with other transportation systems as well, not as an owner-operator, but as a partner in coordinating and formulating policy planning and funding.

Roadway Systems

Other roadway systems have been defined in addition to the State Highway System, including: county roads; city streets; forest highways; public lands roads; park, reservation, campus, and institution's roadway systems; regional bike trails; and private roads. The owner-operators of roadway systems are responsible for the transportation facility but not for providing or operating the vehicles on it.

State Highway System

Locations for the construction of new State highways or for the maintenance of existing roads as State highways are adopted by the California Transportation Commission (CTC) between the termini established by law. There are approximately 269 State Highway Routes that comprise the State Highway System, described in *California Streets and Highways Code*, Section 301 through Section 632.

Subsystems

Subsystems of the State Highway System are defined in Statute:

- The Freeway and Expressway System routes are listed in *California Streets and Highways Code*, Section 253.1 through Section 253.8.
- The Scenic Highway System, routes are listed in *California Streets and Highways Code*, Section 263.1 through Section 263.8.
- The Interregional Road System, routes are listed in *California Streets and Highways Code*, Section 164.10 through Section 164.20.

To date, none of these sub-systems, nor the State Highway System, are complete. Rather, these systems and sub-systems represent the authorized facility to be developed as conditions and funding allow.

Federal Systems

The federal government has defined highway systems. The-federal systems are used for funding purposes and for defining the standards required to qualify for the funding. Owner-operator responsibility remains with the State. These systems are described as follows:

- The Interstate System, the National System of Interstate and Defense Highways, is included in its entirety in the National Highway System.
- The National Highway System (NHS) was established to focus federal resources on roads that are the most important to interstate travel and national defense, that connect with other modes of transportation, and that are essential for international commerce. Congress approved the specific routes that comprise the NHS by enacting the *National Highway System Designation Act of 1995*. This act designated those routes on the map entitled "Official Submission, National Highway System, Federal Highway Administration:" dated November 13, 1995. This designation did not include certain intermodal connectors which were allowed an additional 180 days for designation. Intermodal connectors include connectors to major ports, airports, international border crossings, public transportation and transit facilities, interstate bus terminals and rail and other intermodal transportation facilities, and most of these are not state highways. The 1996 *Route Segment Report* identifies the state highway route segments that are on the National Highway System and the Interstate System.
- Functional Classification identifies principle arterials as well as other functional classifications by Caltrans. Functional system characteristics are discussed in the American Association of State Highway and Transportation Officials (AASHTO) publication entitled: *A Policy on Geometric Design of Highways and Streets*. The 1996 *Route Segment Report* identifies the functional classification of the state highway route segments.

ARTICLE 3 Regional and System Planning

Continuing, Comprehensive, Cooperative Planning

Under federal law, states must carry out a continuing, comprehensive, cooperative and intermodal statewide transportation planning process.

This includes development of a statewide transportation plan and a State Transportation Improvement Program (STIP) (see Chapter 4 – Programming) that facilitates the efficient, economic movement of people and goods in all areas of the State. The State Transportation Plan outlines a range of transportation options for moving both passengers and freight by and through all modes and connections. The State, in cooperation with participating organizations including metropolitan planning organizations (see Figure 1-1) and other regional transportation planning agencies (see Figure 1-2), Native American tribal governments, environmental resource and permit agencies and public transit operators, provides for a fully coordinated process.

State System Planning

Caltrans conducts long-range transportation system planning for the purpose of informing and guiding State, regional and local planning, programming and operational decision makers. To this end, system planning: 1) develops strategies for operating and improving the State Highway System; 2) identifies, analyses, and recommends improvements to the s State Highway System and the larger multimodal and intermodal transportation system; and 3) provides the sound technical basis for tiered decision making leading to needed projects, facilities, and services.

Caltrans conducts long-range State Highway System planning to identify future highway improvements (*California Government Code*, Section 65086) in cooperation with its planning partners. System planning facilitates the efficient, economical, and intermodal movement of people, goods and information. System planning is part of a continuing, cooperative, and comprehensive statewide transportation planning process that responds to federal law (*Title 23 United States Code*, Section 135). System planning strives for interregional and statewide continuity and compatibility of route concepts and the connectivity of the State's transportation system.

The role of system planning is two-fold. First, system planning fulfills Caltrans statutory responsibility as owner-operator of the State Highway System and serves as Caltrans principal mechanism for long-range transportation planning in both rural and urban areas. Second, it provides information for examining and analyzing the larger transportation system in the broader context of statewide mobility and intermodal connectivity. Within this dual role, system planning: 1) identifies or supports and communicates highway capacity, operational, and new technology improvements and, where appropriate, intermodal and modal improvements, that optimize corridor capacity and improve regional and interregional mobility; 2) identifies and prioritizes improvements for recommendation into local and regional plans and pre-program activities (e.g. major investment studies, project study reports) resourced by local or regional agencies or Caltrans; 3) provides the basis for Caltrans priority setting for interregional highway improvements of statewide significance that Caltrans may consider nominating in the Proposed State Transportation Improvement Program (PSTIP); 4) provides information that will assist Caltrans in its intercity rail strategic planning efforts and in examining intercity rail improvements; 5) identifies, at a preliminary level, critical environmental and community concerns or compatibility issues related to proposed system improvements; 6) provides the basis for analyzing the impacts of local development on the State Highway System and proposing appropriate strategies, improvements, and actions to minimize such impacts.

Coordination with regional transportation planning agencies, local land use, and environmental planning efforts occurs throughout the system planning process. The objective is local, regional, and State consensus on route or corridor concepts, improvement priorities, and strategies. Joint planning efforts lead to agreement on route or corridor concepts, improvement priorities, and strategies. Joint planning efforts lead to agreement on priorities and optimized use of constrained resources. Where the regional transportation plan (RTP) adequately addresses Caltrans planning concerns and strategy options, a district may substitute the regional transportation plan for a system planning document.

FIGURE 1-1 Metropolitan Planning Organizations

FIGURE 1-2 Regional Transportation Planning Agencies

System planning activities typically produce the following documents:

- District Strategic Plan

  A district strategic plan (will replace the district system management plan) serves as an internal and external communications tool identifying Caltrans priorities and strategies for route and system improvement.

  The Caltrans Geographic Information System (GIS), corporate data base, and Intermodal Transportation Management System (ITMS) are integral and fundamental tools used in system planning and advanced planning activities. The Intermodal Transportation Management System provides an interactive, intermodal and multimodal, quick response transportation planning analysis tool for use in system planning.

- Concept Reports and Fact Sheets

  A route concept report (RCR) or transportation concept report (TCR) identifies current operating conditions, future deficiencies, route concept and concept level of service (LOS), and improvements for a route or corridor. A fact sheet contains current information found in a route concept report, including the route concept, and is used for quick response activities within Caltrans and with local and regional agencies.

  The facility description element of the concept represents an initial planning approach for candidate improvements and determining estimated costs. All information in the route concept report is subject to change in response to new information or conditions. The nature and size of identified improvements may be altered by subsequent system planning and project development. In conjunction with the regional planning process, decisions relating to mode choice are determined. This decision is normally made by the identification of a need for a corridor study, followed by a metropolitan investment study. As the process comes more near term, the results of the corridor study and investment study become the concept.

- System Development Programs

  A district Transportation System Development Program (TSDP) identifies a reasonable comprehensive and effective range of transportation improvements on both State highways and in modal categories, strategies and actions, and demand and system management options that improve mobility

- Interregional Road System Plan

  The Interregional Road System Plan identifies projects on Interregional Road System (IRRS) routes that will provide the most adequate interregional road system to all economic centers in the State. *California Streets and Highways Code*, Section 164.3 specifies the routes included in the Interregional Road System. Proposed interregional road projects programmed in the STIP must be selected from this plan, except that the CTC may substitute projects if

Caltrans concurs. The plan is limited to projects outside urbanized areas that primarily serve interregional travel, excluding traffic generated as a result of local growth. The plan identifies two subsystems, "High Emphasis Routes" and "Other Priority Routes."

- High Emphasis Routes are the major through, trunk line interregional routes that form the backbone of the State's highway network, connecting the major economic centers. They include all of the rural interstate routes plus 13 non-interstate routes. One of the major objectives of the plan is to develop these "High Emphasis Routes" to a defined minimum facility standard.
- Other Priority Routes provide the additional links to the State's other economic centers and main recreational areas. The projects on the "Other Priority Routes" are aimed at correcting current traffic service problems at spot locations and not at achieving a minimum facility standard for the whole route.

The plan identifies projects over a ten-year period. The projects in the plan together stand as an interregional road system improvement, rather than a collection of scattered projects.

Management Systems

An important part of the planning process which leads to identifying most projects in the State Highway Operation and Protection Program (SHOPP) are the various management systems. The *Intermodal Surface Transportation Efficiency Act of 1991* mandated the establishment, development, and implementation of management systems.

Six management systems were originally required by the *Intermodal Surface Transportation Efficiency Act of 1991*, to focus on the management of transportation system assets and on the performance aspects of the system. However, subsequent federal legislation changed the Management System requirements to options, except for a Traffic Monitoring System and the Congestion Management System. The original systems are listed below:

- Bridge
- Public transportation
- Intermodal
- Pavement
- Safety
- Congestion

The following existing Caltrans systems, which were to be incorporated into some of the *Intermodal Surface Transportation Efficiency Act of 1991* management systems, continue to be utilized:

- The Structures Replacement and Improvement Needs (STRAIN) report, which was to be incorporated into the Bridge Management System, is used for the HA21 bridge replacement program. It is developed annually by the Headquarters Division of Maintenance-Office of Structures Maintenance and Investigations and is based on periodic inspections of all State structures. (A new system under development called PONTIS will replace the Structures Replacement and Improvement Needs report.) The Structures Replacement and Improvement Needs report contains recommendations of structure work to be done as determined by the Office of Structures Maintenance and Investigations, except for bridge strengthening which is determined by the district permit engineer.
- The Pavement Management System is used for the HM Major Maintenance Program and the HA22 Pavement Rehabilitation Program. It is based on the latest and prior pavement condition surveys performed by the Headquarters Division of Maintenance on a continuous basis.
- The Safety Index (SI), which was to be incorporated into the Safety Management System, is used for the HB1 safety program. It utilizes a computerized interface with the Project Management and Control System (PMCS) to identify locations with statistically high accident rates maintained in the Traffic Accident Surveillance Analysis System (TASAS) database. Locations are developed into projects to be constructed to improve or enhance safety and are then prioritized on the basis of a Safety Index.

Planning regulations require a Congestion Management System for transportation management areas with populations over 200,000. The Intermodal Transportation Management System Planning Tool was developed in response to the *Intermodal Surface Transportation Efficiency Act of 1991* requirements. These are both discussed below.

- The Congestion Management System used for the HB4 operational improvement program, HB5 high-occupancy vehicle program, and HB6 ride sharing program is primarily the responsibility of the various congestion management agencies in their Congestion Management Programs.
- The Intermodal Transportation Management System (ITMS) planning tool is ideal for analyzing the performance of major corridor modal facilities up to completion of the project study report (PSR) stage of project development. Most planning tool generated performance measures serve as useful documentation for the project development process. The planning tool is used for identifying deficiencies and for performance-based evaluation of single actions and multiple-action strategies, such as one or more modal projects,

system management changes, policy changes, or various combinations thereof. In this capacity, it is used to narrow down possible alternative solutions and to document performance measures for proposed and adopted solutions. The planning tool works within a desktop geographic information system. The planning tool is not an iterative network model. The modeling inputs used in the planning tool are from the regional transportation planning agencies.

Ideally, the Intermodal Transportation Management System planning tool is used to perform analyses in the planning process for:

- Long term planning to identify deficiencies and make performance-based evaluations of general regional and statewide and inter-regional intermodal strategies
- Route concept reports and other corridor alternatives analysis (typically considered in the regional transportation plans and the regional air quality plans) to examine deficient corridors and make performance-based evaluations of general intermodal strategies for the given corridor
- Area studies to examine deficiencies of an area's facilities and to support alternatives analysis and other performance-based evaluation of single-corridor and multiple corridor intermodal strategies for the area
- Corridor studies and transfer facility studies to examine deficiencies of corridors or route segments in corridors or near transfer facilities, and to make alternatives analysis and other performance-based evaluation of intermodal strategies for the corridor
- Major investment studies and other studies which result in a recommended or proposed alternative, to make specific performance-based evaluations of alternatives addressing a targeted set of deficiencies or other problems
- Project study reports and other project defining reports, to provide performance-based evaluation of the strategy (a combination of actions, including a project or projects) chosen to improve system performance, and the degree of performance improvement, for purposes of documentation and project comparison. Documentation should include whether the results are from the project only, or from a multiple-project strategy, as projects may depend on one another for the full benefit of a combined strategy.

During project development and any point beyond the project study report, one would ideally refer back to planning tool deficiency levels and performance measures recorded in the project study report or other project-defining documentation.

In the absence of a previous Intermodal Transportation Management System analysis, the planning tool performance measures are still needed for documenting what improves and what worsens the degree of performance improvement. Therefore, it is recommended that the planning tool be used for performance-based evaluation of each project strategy (a combination of

actions, including a project or projects) chosen to improve system performance. Additionally, the performance measures support other means of comparing projects. As with project study reports, documentation should include whether the results are from the project only, or from a multiple-project strategy; as projects may depend on one another for the full benefit of a combined strategy.

Certain planning tool performance measures can be refined with the use of more accurate inputs available during project development; other performance measures should be disregarded in favor of better information. Refer to the Headquarters Division of Transportation Planning for further information on the Intermodal Transportation Management System planning tool.

Master Plans

A number of programs are based on a prioritization of facilities identified in master plans. Master plans are developed and maintained by various divisions. A list follows:

- Safety Roadside Rests Master Plan used for the HB33 roadside rest program – by the Headquarters Division of Design-Landscape Architecture Program
- Truck Weigh-Stations Master Plan used for a portion of the HA4 protective betterment program – by the Headquarters Division of Traffic Operations
- Facilities Master Plan used for (1) HA11 equipment shop program, (2) HA12 maintenance station program, (3) HA13 Office Building, Traffic Management Center and Materials Laboratory program, and (4) HA14 Toll Collection Administration Facility program – all by the Asset Management Program in the Headquarters Division of Right of Way and Land Surveys
- Park & Ride Lots Master Plan used for the HB6 Ridesharing program – by the Headquarters Division of Traffic Operations

Priority Lists

Projects for some programs are identified through a priority rating process. Priority lists within a particular program rank projects as candidates for programming determined by some objective criteria.

- Retrofit soundwall (HB311) program needs are identified and grouped into projects and included on the priority list in accordance with *California Streets and Highways Code*, Section 215.5 and Section 215.6 based on information contained in a current noise barrier scope summary report. Ratings are based on the existing intensity of sound generated by freeway traffic, the cost of the project, the level of noise reduction attainable, and the number of residences affected. Highest consideration is given to residential areas that were developed prior to November 1974 and prior to the opening of the freeway or

prior to a subsequent widening or other alteration of the freeway which resulted in a significant and measurable increase in ambient noise levels. When new retrofit needs arise, Caltrans evaluates them for their eligibility under the Retrofit Soundwall Program; if eligible, they are then placed on the priority list. When noise problems are identified by individual property owners or local agencies, the Caltrans district should evaluate the location and determine its eligibility.

- Planting (HB32) program, planting restoration (HA25) program, and roadside rest area restoration (HA26) program needs are identified based on criteria set by the Headquarters Division of Design-Landscape Architecture Program.
- Seismic retrofit (HA4S1, HA4S2, and HA4S3) program needs are identified based on criteria set by the Headquarters Division of Engineering Services-Structure Design.
- Protective betterment (HA42) program needs are identified based on criteria set by the Headquarters Division of Maintenance.

Other programs, including those that are derived from system planning or regional planning, or those that are derived from the various remaining management systems, are also ranked on priority lists.

State Highway Inventory

The State highway inventory is a computerized listing of segments of the State Highway System consisting of approximately 4000 segments, summarizing highway statistics and containing a description of the highways in terms of existing physical facility, system, and level of traffic service. It can be used as an indication of problem locations. The current *Route Segment Report* should be consulted for more information.

Regional Transportation Planning

Regional transportation plans are important documents that lead to identification of projects. Regional transportation plans are State mandated documents developed or updated every two years by all 43 regional transportation planning agencies (see Figure 1-2). They consist of policy, action, and financial elements. In a region designated as a metropolitan planning organization (MPO) (see Figure 1-1) under federal law, the regional transportation plan is also federally mandated. For metropolitan planning organizations, the regional transportation plans also include long and short-range transportation system management activities. Regional transportation planning agencies and metropolitan planning organizations usually, but not always, cover the same territory and are normally a single organization where

both are required. Metropolitan planning organizations respond to the federal requirements while regional transportation planning agencies respond to the State requirements.

Air Quality Conformity

The linkage between transportation planning and air quality improvement was significantly strengthened with the passage of the federal *Clean Air Act Amendments of 1990* and the *Intermodal Surface Transportation Efficiency Act of 1991*. Transportation plans and programs are required to fully consider air quality impacts of transportation investments. Regional plans and programs are required to demonstrate air quality conformity in order for projects to proceed. The *Clean Air Act Amendments of 1990* and the *Intermodal Surface Transportation Efficiency Act of 1991* require that a project's "design" concept and scope be specifically outlined in the metropolitan planning organization's long-range transportation plan.

Additional information about the nonattainment areas subject to air quality conformity is located at:
http://www.dot.ca.gov/hq/env/air/main_sections/conformity.htm

In this manual the *Intermodal Surface Transportation Efficiency Act of 1991* "design" concept and scope is the "planning" concept and scope in the system planning stage. When updated with no significantly changes, the "planning" concept and scope becomes the "design" concept and scope and are used for the development of a project initiation document just prior to programming in a programming document (see Chapter 9 – Project Initiation for definitions of design concept and design scope).

Planning Concept

The planning concept defines the type or mode of a facility; e.g., highway, transit, rail or combination which is proposed to meet a transportation need. For highway facilities this is refined to freeway, expressway, or conventional highway.

Planning Scope

The planning scope for highway facilities addresses such issues as number of lanes, location and length of project, high-occupancy vehicle lanes, general interchange and intersection spacing. For transit or rail modes, it relates to the person-carrying capacity of the facility.

Major Investment Studies

FHWA's and the Federal Transit Administration's metropolitan planning rules implementing the *Intermodal Surface Transportation Efficiency Act of 1991* requires that a major investment study (MIS) be completed prior to FHWA or the Federal Transit Administration's approval of any major investment within any metropolitan area if there is a potential for federal funds. The federal implementing regulations for the *Intermodal Surface Transportation Efficiency Act of 1991* define a major transportation investment as a highway or transit improvement of substantial cost that is expected to have a significant effect on capacity, traffic flow, level of service, or mode share at the transportation corridor or sub-area scale.

The purpose of these studies is to assure that an adequate range of alternatives is considered when determining "design" concept, and scope. The major investment study should also evaluate effectiveness and cost effectiveness of all alternatives. They are expected to be cooperative studies involving the metropolitan planning organization, Caltrans, local transportation agencies, and transit operators. These studies would be most effectively accomplished as part of the community's long range planning process, and should settle the question of mode of improvement prior to starting the project development process.

District Input to Regional Transportation Plans

The district should be an active participant in developing the regional transportation plans through its system and regional planning processes. The district, participating in the regional planning process, uses its system planning analyses and the district strategic plan to facilitate State input into the regional transportation plans. Conversely, the regional transportation plan is a critical source of information for the district when updating their district strategic plan. *California Government Code,* Sections 65086, 65086.4, and 65086.5 allows the regions to adopt a future development list, which is the regional transportation planning agencies' financially prioritized list of capacity enhancing improvements on the State Highway System. This list is used for preparing project study reports.

Regional Transportation Plan Purpose

As stated in the CTC's Regional Transportation Plan Guidelines, one of the purposes of a regional transportation plan is to "identify transportation improvements in sufficient detail to aid in the development of the Federal Transportation Improvement

Program (FTIP), the Regional Transportation Improvement Program (RTIP) and State Transportation Improvement Program (STIP), to be useful in making decisions related to the development and growth of the region and to permit an estimate of emissions impacts for demonstrating conformity with the State Implementation Plan (SIP) for achieving air quality standards." Regional transportation plans should include long-term (20 years or beyond) and short-term (up to 10 years) transportation improvement plans and objectives. Under the *Intermodal Surface Transportation Efficiency Act of 1991*, metropolitan planning organization regional transportation plans are required to be financially constrained. It is useful to also consider what should be done to meet identified needs beyond constrained funding. In nonattainment areas for federal clean air standards, the regional transportation plan is reviewed for conformity with the State Implementation Plan at least every three years to assure that percentage reduction requirements for emissions are being met. Projects are prioritized and defined with enough specificity of design concept and scope to facilitate a finding of system conformity with the State Implementation Plan.

The regional transportation plan contains a map showing the short-range and long-range recommended improvements and additions to the regional highway system increasing capacity and improving operational efficiency of the network. Maps are developed to illustrate the existing, short-range and long-range levels of service for routes of regional significance based on the recommended improvements. The maps include the locations of locally agreed upon interchanges on existing or planned freeways.

Regional transportation plans address freight and air cargo movements, freight distribution routes, and international border crossing improvement projects. They contain an airport ground-access improvement program in regions with a primary air carrier airport (a facility with 10,000 or more enplanements a year.) They also clearly define port access projects in terms of scope, cost and delivery schedules.

Federal air quality conformity rules require that projects included in a conforming regional transportation plan be limited to those with identified reasonably available funding sources. Regional transportation plan projects within air quality nonattainment areas are limited to those which have reasonably available funding sources identified. Other necessary projects included in an unconstrained needs list are not considered part of a conforming regional transportation plan.

A regional transportation plan is considered a project under the *California Environmental Quality Act of 1970* (CEQA) and must meet specific CEQA requirements. The regional transportation plan must clearly document that it has been prepared in compliance with CEQA. In nonattainment areas projects must be described in a conforming regional transportation plan before they can be programmed in a Federal Transportation Improvement Program. An air quality conformity assessment statement is required. This statement is a finding of conformity to the State Implementation Plan.

Memorandum of Understanding Integrating the National Environmental Policy Act and Section 404 Processes

The states of California, Nevada, and Arizona have signed a memorandum of understanding with several federal agencies regarding the integration of the *National Environmental Policy Act of 1969* (NEPA) with Section 404 (b) (1) of the *Clean Water Act of 1972*, which provides the U.S. Army Corps of Engineers with guidelines for issuing fill permits. The objective of the memorandum of understanding is to gain the concurrence of all agencies at each transportation development phase (plan, program, project) before going on to the next phase.

Avoidance of large or special aquatic resources is best addressed at the systems planning stage. The regional transportation plan with its environmental impact report, and corridor and sub-area studies are appropriate vehicles in which to assess system design alternatives and their environmental effects, including system management strategies and the mode, general location, and capacity for the proposed regional transportation facilities, the purpose-and-need, the cost, and the "design" concept and scope. System design decisions, documented to support later project decisions, if sufficiently detailed to address the information requirements of NEPA and Section 404, and if responsive to the regulatory requirements of NEPA and Section 404, allows the reviewing agencies to concur with the decisions.

Local Transportation Planning

Caltrans, in cooperation with participating agencies, facilitates a coordinated planning process with local governments, large scale public and private transportation providers, operators of major intermodal terminals and multi-state businesses. This cooperation and coordination is reflected in consistency between transportation decision making, applicable short and long-range land use plans, development plans, and the effect of transportation decisions on land use and land development. Coordination in consideration of intermodal facilities with land use planning is also coordinated between Caltrans and local agencies.

Goods Movement

Caltrans has worked closely with the freight industry in recent years through the Statewide Intermodal Goods Movement Advisory Committee and freight advisory councils of various metropolitan planning organizations and regional transportation planning agencies to address freight transportation needs in planning and programming. Several freight and border crossing studies to improve the efficiency of goods movement have been conducted.

Other Plans

Other plans and programs needing coordination include Congestion Management Programs, Capital Improvement Programs, and air quality plans such as the Air Quality Attainment Plan, the Air Quality Maintenance Plan, and the State Implementation Plan.

ARTICLE 4 Corridor Planning

Corridor Policy

It is Caltrans policy to work on a partnership basis with local land use authorities to accomplish early identification of transportation corridors and to explore all appropriate means for the acquisition and preservation of those corridors.

Corridor Preservation

Corridor preservation is essential if an adequate transportation infrastructure is to be provided in support of a strong and vital economy. A partnership between federal, State, regional and local jurisdictions and the private sector is needed to plan for future needs and to share in the cost of meeting this responsibility. Since transportation mutually benefits all citizens, this policy relies heavily on successful negotiations between State, regional and local jurisdictions and the private sector to achieve its goal.

The State, in cooperation with participating organizations, provides for a fully coordinated process, including measures to preserve rights of way for construction of future transportation projects.

Corridor Preservation Process

The corridor preservation process has the following four phases:

Phase 1 - Identify Need for Corridor

Regional transportation plans, county and city general plans, corridor studies for future transportation facilities, district system management plans and route concept reports should identify potential opportunities for corridor preservation. Opportunities for all transportation modes should be considered. The district should work cooperatively with regional and local jurisdictions in identifying corridors.

Transportation Corridor Fact Sheet:

When the tentative need has been identified, a transportation corridor fact sheet should be prepared by the district transportation planning unit listing the need, description, issues, etc. of establishing the corridor.

Phase 2 - Corridor Environmental Review

A corridor environmental review is conducted to identify the potential impacts of alternative transportation facilities within a corridor. All elements such as need, purpose, issues, etc., must be discussed.

Phase 3 - Include Corridor in Regional Transportation Plans and Local General Plans

The district will work with appropriate federal, regional, local, and private entities to include the corridor in the regional transportation plan and in local general plans. The regional transportation planning agency (RTPA) may use the information from the corridor environmental review in developing their environmental document for the regional transportation plan, and where appropriate, the major investment study. Modes for the corridor should be realistically evaluated based on the overall modal planning in the general plan. An adequate corridor width should be estimated to accommodate future transportation needs.

Phase 4 - Preserve Corridor

State and local jurisdictions have authority to preserve corridors through a variety of means. The entire land-use approval process contains many opportunities for local jurisdictions to condition approval for development. Care should be taken not to interfere with the use of or access to and from private property.

Preservation would normally be funded and carried out by the local agency based on the inclusion of the transportation corridor in the general plan. This could lead to the development of a precise plan and an amendment to the circulation element of the local general plan. A State route adoption would not normally be part of the process. The adoption of a route location by the CTC would only be appropriate when the result of the corridor study is a recommendation to implement an improvement that includes the highway mode and when funding for construction, or, at a minimum, for right-of-way acquisition, has been programmed or committed.

SECTION 5 Project Development Philosophy

Balanced Transportation Projects

The project development process seeks to provide the people of California with a degree of mobility that is in balance with other values. It must ensure that economic, social, and environmental effects are fully considered along with technical issues, so that the best interests of the public good are served. Attention must be given to issues like the following:

- Safe and efficient transportation
- Attainment of community goals and objectives
- Transportation needs of low mobility and minority groups
- Support of the State's economic development
- Eliminating or minimizing adverse effects on the environment, natural resources, public services, aesthetic features, and the community
- Realistic financial estimates
- Cost effectiveness

Individual projects are selected for construction on the basis of overall system benefits as well as community goals, plans and values. Decisions place emphasis on making different transportation modes work together effectively.

Various Perspectives Considered

Proper consideration of these issues requires that a facility be viewed from the perspectives of the user, the nearby community, and larger regional and statewide interests. For the user, efficient travel and safety are paramount concerns. At the same time, the community often is more concerned about local aesthetic, social, and economic impacts. The general population, however, tends to be interested in how successfully a project functions as part of the overall transportation system, as well as how large a share of available capital resources it consumes.

Implementation

Policies and procedures for implementing the project development philosophy are contained in subsequent sections of this manual, as well as in the *Standard Environmental Reference*. Implementation of the project development process depends on the following five elements:

Project Development Teams

Studies on major projects must be guided by multidisciplinary teams. As appropriate, the teams include representation from other agencies and the public. (See Chapter 8 – Overview of Project Development.)

Social, Economic, and Environmental Considerations

Social, economic, and environmental issues must be considered in parallel with engineering and technical studies. Their consideration is an integral part of the project development process and is to be reflected from the very beginning of studies. (See Chapter 10 – Formal Project Studies.)

Alternatives

A full range of reasonable alternatives should be investigated to ensure that tradeoffs and opportunities are identified that will provide the best, balanced solution for the transportation need. This includes supporting local and regional goals, providing community and environmental enhancements, and mitigating for unavoidable adverse effects. (See Chapter 8 – Overview of Project Development and Chapter 10 – Formal Project Studies.)

Community Involvement

Districts must maintain continuing communication with affected governmental agencies. A program of two-way communication with community groups and citizens should be developed, when appropriate. Special effort should be made to seek the involvement of minorities and low-mobility groups. (See Chapter 22 – Community Involvement.)

Project Work Plan

A project work plan provides an overview of the proposed project goals and the proposed project's scope, schedule, and resource requirements (dollars and personnel). The plan also informs project personnel of their responsibilities and their roles in relation to others working on the same project. The plan is prepared and updated by the project manager.

CHAPTER 2 – Roles and Responsibilities

Table of Contents

CHAPTER 2 – Roles and Responsibilities..... 2-5
SECTION 1 Headquarters Division of Design 2-5
Reference Information 2-5
Headquarters Division of Design..... 2-5
State Landscape Architecture Function 2-5
Local Programs Function..... 2-6
Project Planning and Design Functions 2-6
Dispute Resolution Process 2-7
SECTION 2 Project Planning and Design Function of Headquarters Division of Design 2-8
ARTICLE 1 General..... 2-8
Mission in Project Planning and Design..... 2-8
Relationships with Others..... 2-9
Headquarters Division of Design Division Chief..... 2-10
ARTICLE 2 Headquarters Project Delivery Coordinator 2-11
District Liaison 2-11
Exception Approvals 2-12
Project Scope, Schedule, and Cost Changes..... 2-12
ARTICLE 3 Other Support Services..... 2-12
Headquarters Division of Design Documents 2-12
Project Development Guidance 2-13
Design Guidance..... 2-14
Technical Expertise and Assistance..... 2-15
Training Academies..... 2-15
Specialized Training 2-16
On-the-Job Training..... 2-16
SECTION 3 District 2-17
Coordination with Outside Entities 2-17
District Director 2-17
Deputy District Director Design..... 2-17
Deputy District Director Project Management 2-17
Deputy District Director Project Coordination..... 2-18
Project Manager..... 2-18
Project Control Specialist 2-18

Design Senior 2-18
Project Engineer 2-18
Managing a Specific Project 2-19
Responsibility for State Highway Improvements 2-19
SECTION 4 Project Management 2-21
Philosophy 2-21
Coordination Among Project Management Personnel 2-21
Project Manager 2-21
Project Engineer 2-22
Functional Managers 2-22
SECTION 5 Special Funded Projects and Related Projects 2-23
Special Funded Projects 2-23
Complementary Programs 2-26
Project Development Appeal Process 2-27
Cooperative Agreement Considerations 2-28
Local Use of Consultants 2-29
Local Acquisition of Right-of-Way 2-29
Contract Administration 2-29
Reimbursing Construction Administration 2-30
Agreements for Construction Administration 2-31
Encroachment Permit Considerations 2-32
Subsequent Agreements 2-33
Review, Coordination, and Oversight 2-33
SECTION 6 Lead Agency 2-36
General 2-36
Caltrans as Lead Agency for California Environmental Quality Act 2-36
Local Agency as Lead Agency for California Environmental Quality Act 2-37
Caltrans as Lead State Agency for National Environmental Policy Act 2-38
SECTION 7 Federal Government 2-39
ARTICLE 1 Federal Highway Administration 2-39
Authority 2-39
Stewardship and Delegation of
Federal Highway Administration Authority 2-39
ARTICLE 2 Other Federal Agencies 2-40
Authority 2-40
National Environmental Policy Act Compliance 2-40
Memorandum of Understanding Integrating the
National Environmental Policy Act and Section 404 Processes 2-41
SECTION 8 Use of Consultants 2-43
General 2-43
Methods for Contract Services 2-43
Contractors License 2-43
Consultant Selection Methods 2-43
“One Step” Method 2-44
“Two Step” Method 2-44
Guidelines and Procedures 2-44

Consultant Oversight 2-44
SECTION 9 Signatures on Technical Reports 2-45
California Business and Professions Code 2-45
Consultants and Local Entities 2-45
Responsible Charge 2-45
Span of Control 2-46
Engineering Decisions 2-46
Evaluating "Responsible Charge" 2-47
Reports that Require Professional Engineering Conformance 2-47
Application Procedures 2-48
Coordination with Environmental Documents 2-48

Table of Figures

FIGURE 2-1 District Numbers and District Office Locations 2-20
FIGURE 2-2 Federal Statutes, Regulations and Executive Orders
That May Affect Transportation Projects 2-42

CHAPTER 2 – Roles and Responsibilities

SECTION 1 Headquarters Division of Design

Reference Information

Some of the references found in this chapter have hyperlinks that connect to Caltrans intranet pages which are not displayable to the general public. Until such time that the specific reference becomes available on the internet, the user will have to contact their district liaison, Caltrans project manager, or the appropriate Headquarters division to inquire about the availability of the reference.

Headquarters Division of Design

The Division Chief of the Headquarters Division of Design is responsible for the development and consistent application of Caltrans' policies during the project development process. This responsibility covers all projects on State highways, regardless of funding, and projects involving State or federal programs on local facilities. The Division Chief reports to the Deputy Director for Project Development.

Headquarters Division of Design provides guidelines and procedural directives for carrying out the project development process. Headquarters Division of Design reviews and monitors the process to ensure that Caltrans' goals are being accomplished, and to evaluate the need for changes. Headquarters Division of Design is comprised of the State landscape architecture function, the local programs function, and the various project planning and design functions.

State Landscape Architecture Function

Landscape Architecture Program

The Chief of the Headquarters Landscape Architecture Program is responsible for the development of Caltrans' policies, programs, procedures, and standards for all aspects of landscape architecture (highway planting, highway planting restoration, replacement planting, revegetation, vegetative erosion control), safety roadside rest areas, vista points, scenic corridors, and noise barriers. For further details on these

subjects, see the *Highway Design Manual* *(HDM)* and Chapter 29 – Landscape Architecture.

Local Programs Function

Office of Local Programs, Procedures Development

The Chief of the Office of Local Programs, Procedures Development is responsible for Caltrans' policy, procedures, and program administration for Federal and State local assistance on local agency transportation systems. The Office of Local Programs, Procedures Development is also responsible for development of Caltrans policy for projects-funded-by-others. See the *Local Assistance Procedures Manual* for further details.

Office of Local Programs, Project Implementation

The Office of Local Programs, Project Implementation is a liaison between the Federal Highway Administration (FHWA) and the local agencies for Federal local assistance programs. The Office of Local Programs, Project Implementation is responsible for project implementation steps that cannot be fully delegated to local agencies, including authorization to proceed, federal funds obligation, agreement execution, and approval of environmental documents, right-of-way documents, and payments from the State Controller and others. The Office of Local Programs, Project Implementation also provides assistance to local agencies in interpreting regulation, manuals and guidelines.

Office of Local Programs, Program Management

The Office of Local Programs, Program Management is responsible for distribution, management and oversight control of each specific local assistance program. The Office of Local Programs, Program Management insures that the funds are expended to meet the program goals and that allocations and budget authority are not exceeded.

Project Planning and Design Functions

Headquarters Division of Design's primary mission in its project planning and design function is to promote statewide consistency in the project development and design process, in support of Caltrans' mission of developing transportation projects. See Section 2 for further details on how Headquarters Division of Design accomplishes its project planning and design mission.

Dispute Resolution Process

Occasionally, there may be disagreements between the district and the Headquarters Project Delivery Coordinator on the proper course of action. When disagreements cannot be resolved, the following dispute resolution process must be used:

- Pre-elevation: Every effort should be made to resolve disputes between the district and Headquarters Division of Design, at the lowest possible level.
  - District design office chief discusses issue with Headquarters Project Delivery Coordinator.
  - District/region design manager discusses with district design office chief, staff, and project engineer to determine facts.
  - District/region design manager discusses with Headquarters Project Delivery Coordinator.
  - Headquarters Project Delivery Coordinator and district/region design manager may discuss with other district staff or Headquarters Division of Design staff.
  - District/region design manager and Headquarters Project Delivery Coordinator discuss with District Director and other district managers.
- Formal elevation: If there is agreement at the district level and all attempts between the district and Headquarters Project Delivery Coordinator fail to result in concurrence from the Headquarters Project Delivery Coordinator;
  - District Director prepares written justification to Headquarters Division of Design Chief that includes signature of the district/region design manager.
  - Headquarters Division of Design Chief will:

    1. Attempt to resolve issue. If no resolution, go to steps 2 through 4;

    2. Appoint a three member team of subject matter experts to review and make a recommendation to Headquarters Division of Design Chief.

    3. Consider the recommendations of the team and prepare a decision to either support or deny District Director's request.

    4. If Headquarters Division of Design Chief supports the District Director's request, the Headquarters Division of Design Chief will sign as the approval authority.

  - District Director can appeal to Deputy Director Project Delivery (Chief Engineer) with no further appeals.

SECTION 2 Project Planning and Design Function of Headquarters Division of Design

ARTICLE 1 General

Mission in Project Planning and Design

Headquarters Division of Design's primary mission in project planning and design is to promote statewide consistency in the project development and design process, in support of Caltrans' mission of developing high-quality transportation projects. Headquarters Division of Design accomplishes this by providing the following activities and services:

Office of Project Development Procedures and Quality Improvement

Develops and maintains project development processes, procedures, policies and agreements that are used statewide for project planning, approval, and design and improving the quality and cost effectiveness of projects through the use of value analysis (VA).

Office of Geometric Design Standards

Develops and maintaining design standards, policies, procedures and practices that are used statewide for highway geometric design.

Office of Highway Drainage Design

Develops and maintains design standards, policies, procedures and practices that are used statewide for hydraulic and drainage design.

Office of Pavement Design

Provides training related to the project development and design process in an effort to enhance and improve Caltrans engineering staff's technical expertise.

Develops and maintains design standards, policies, procedures and practices that are used statewide for project pavement structural section design.

Office of CTC Highway Appearances, Encroachments Exceptions and Resource Conservation

Investigates and represents Caltrans before the California Transportation Commission (CTC) when property owners appear to protest the taking of their property, develops and maintains policies and practices that are used statewide for highway encroachments, high-low risk utility facilities, conservation of resources and technology transfer.

Office of Computer Aided Drafting Design and Engineering Geographic Information Systems

Provides training for roadway design software and drafting software. Develops and maintains computer-aided design and drafting (CADD) standards and sets guidelines and standards for the preparation of project plans. Archives the electronic as-built files in the Document Retrieval System (DRS) and arranges for the preparation and storage of microfilm copies.

Headquarters Project Delivery Coordinator

Provides technical expertise and assistance to district engineering staff.

Relationships with Others

While Headquarters Division of Design's responsibility for project planning and design is limited to the State Highway System (SHS), many local agencies and consultants in California utilize the manuals and policies of Caltrans for their work or when they do work on the State Highway System. Such utilization of Caltrans' manuals and policies requires Headquarters Division of Design to maintain liaison with, and develop overall policies and procedures in coordination with, the district and Headquarters offices, local agencies, FHWA, the American Association of State Highway and Transportation Officials (AASHTO) and other State and federal agencies and organizations. In addition, Headquarters Division of Design represents Caltrans on national committees for the Transportation Research Board (TRB), the American Association of State Highway and Transportation Officials (AASHTO), and the Western Association of State Highway and Transportation Officials (WASHTO), etcetera, to assure that California's interests are represented and protected in the formulation of national design policies and standards.

Headquarters Division of Design Division Chief

The Headquarters Division of Design Division Chief is responsible for developing and maintaining procedures, policies, practices and standards for the overall project development process. In order to maintain statewide consistency in the project development and design of projects the Headquarters Division of Design Division Chief has been delegated responsibility for approval and/or execution of the following project planning and design documents:

- Freeway agreements (execution authority)
- Exception to policy on encroachments into access-controlled highways (delegated to Chief, Office of CTC Highway Appearances, Encroachment Exceptions, and Resource Conservation)
- Denominations as controlled access highway
- Nonstandard cooperative agreements
- Exceptions to mandatory design standards (delegated to the Headquarters Project Delivery Coordinator or District Director as designated in *Highway Design Manual*, Table 82.1A)
- Exceptions to project development policy, practices and procedures
- Exceptions to policy on hazardous waste removal during design
- Route adoption maps
- Exceptions to the Policy on High and Low Risk Underground Facilities Within Highway Rights of Way (delegated to Chief, Office of CTC Highway Appearances, Encroachment Exceptions, and Resource Conservation)
- Approval of experimental or research features

In this role, the Headquarters Division of Design Division Chief works closely with the Headquarters Division of Environmental Analysis Division Chief, who is responsible for environmental, social, and economic aspects as they relate to the project development process.

ARTICLE 2 Headquarters Project Delivery Coordinator

District Liaison

To facilitate project planning and design liaison with the districts, the Headquarters Division of Design Division Chief is assisted by Headquarters Project Delivery Coordinators each assigned to one or more of the districts. The primary purpose of the Headquarters Project Delivery Coordinator is to facilitate the project planning process through early preliminary review, liaison and coordination. The Headquarters Project Delivery Coordinator is the district's main contact with the Headquarters Division of Design on overall project development matters and procedures pertaining to planning, design, traffic, and environmental issues. The Headquarters Project Delivery Coordinator also provides a channel through which any problem in a district can be brought to the attention of the proper party in Headquarters.

The success of this undertaking depends to a great extent on cooperation and communication between the Headquarters Project Delivery Coordinator and the district. The district is encouraged to bring to the attention of the Headquarters Project Delivery Coordinator, at the earliest possible time, all project development issues or project design features about which controversy or schedule delay may develop, so that these problems may be resolved in a timely manner without loss of project development effort.

Specialists from other units are called upon by the Headquarters Project Delivery Coordinator as the need arises: from Headquarters Division of Design, these may include a project development procedures engineer; from other divisions, these may include a Headquarters Traffic Engineering Liaison, a Headquarters Division of Engineering Services project functional manager, or an environmental coordinator.

Exception Approvals

The Headquarters Division of Design Division Chief has delegated approval authority for exceptions to most of the mandatory design standards to the Headquarters Project Delivery Coordinator as designated in *Highway Design Manual*, Table 82.1A. See Chapter 21 – Exceptions to Design Standards for procedures.

The Headquarters Project Delivery Coordinator also reviews requests for State-only funding in the district prior to submittal to the Headquarters Division of Transportation Programming (who coordinates approval of current and budget year State-only funding requests with the Headquarters Division of Budgets). See Section 7 for FHWA involvement.

Project Scope, Schedule, and Cost Changes

The Headquarters Project Delivery Coordinator plays an integral role in the project scope, schedule, and cost change process (See Chapter 6 – Project Cost, Scope, and Schedule Changes). Cooperation and communication between the Headquarters Project Delivery Coordinator and the district is essential when project changes are proposed. The Headquarters Project Delivery Coordinator must be brought into the process at an early stage to explore the use of value analysis as a means for assessing alternative solutions to the problems causing project changes. Preferably, this should be done during the Headquarters Project Delivery Coordinator's visit to the district, so that details can be accurately ascertained. After exploring the alternatives, the district and the Headquarters Project Delivery Coordinator recommend the appropriate course of action.

ARTICLE 3 Other Support Services

Headquarters Division of Design Documents

Headquarters Division of Design Office Chiefs are responsible for developing and maintaining design standards, policies, procedures, and practices. These are contained in the Headquarters Division of Design manuals and guidelines listed in Chapter 1 – Introduction, Section 2.

Project Development Guidance

The Office of Project Development Procedures and Quality Improvement of Headquarters Division of Design has the following responsibilities: (1) establishing and maintaining project planning policy, (2) reviewing and approving freeway agreements, and (3) developing and maintaining policies and procedures on community relations and public hearings for transportation projects. In addition, this office is involved in seeking CTC approval of route matters. This office either prepares or helps the district prepare the following items, as appropriate:

- Requests for CTC approval of new public-road connections to freeways and expressways
- Recommendations to the CTC for route adoptions, rescissions, and redesignations
- Reports denominating freeways to controlled access highways
- Freeway and controlled access highway agreements
- Appearance information sheets, when CTC condemnation actions (resolutions of necessity) are required
- Issue papers, fact sheets, and special study reports on sensitive projects or issues for Caltrans management, the CTC, and the California State Legislature

The Office of Cooperative Agreements in Headquarters Division of Design reviews and approves the following items, as appropriate:

- Cooperative Agreements
- Master Agreements
- Interagency Agreements

The Office of Special Projects in Headquarters Division of Design has the following responsibilities: (1) developing and coordinating the annual value analysis program, (2) maintaining expertise in conducting value analysis studies, (3) maintaining the value analysis consultant contract, and (4) assuring compliance with the federal requirement for value analysis studies on all federally funded National Highway System (NHS) projects costing. The value analysis staff in Headquarters Division of Design either prepares or helps the district prepare or provides the following items, as appropriate:

- District annual value analysis program
- Statewide value analysis program
- Assistance conducting value analysis studies
- Independent external peer reviews using value analysis studies
- Assistance conducting "life-cycle cost analysis"
- Annual reports and value analysis program analysis submittals to FHWA

The Office of CTC Highway Appearances, Encroachment Exceptions and Resource Conservation of Headquarters Division of Design has the following responsibilities within the State highway right-of-way: (1) developing and maintaining policy and procedures on non-highway facilities within controlled access right-of-way, and (2) developing and maintaining policy and procedure on work around high risk and low risk utility facilities. This office prepares responses to requests concerning exceptions in the following areas:

- Accommodation of utility facilities within controlled access right-of-way
- Accommodation of other non-highway facility encroachments
- Exceptions to the Policy on High and Low Risk Underground Facilities Within Highway Rights of Way

Design Guidance

Other offices and specialists within Headquarters Division of Design have the role of establishing and maintaining standards, policies, procedures, and practices in the following areas:

- Highway geometric design features
- Pavement structural-section design elements
- Drainage design features
- Noise abatement and accessibility design elements

Technical Expertise and Assistance

Headquarters Division of Design provides technical expertise and assistance to the districts in the following areas:

- State and federal laws, regulations, policies, standards, guidelines and practices
- Design for safety
- Development of quality, cost-effective projects
- Geometric design during project development
- Project development process
- Design of structural section and drainage facilities
- Hydraulics and hydrology
- Project cost and scope
- Procedures for uniform cost estimating and control
- Issue resolution and coordination with other headquarters functional units and FHWA
- Second-level right-of-way reviews for resolutions of necessity to initiate condemnation cases
- Exceptions to mandatory and advisory design standards
- Value analysis
- Resource conservation
- Exceptions to encroachment policy and high and low risk policy
- Developing work plans for experimental features
- Stormwater

Training Academies

Headquarters Division of Design provides professional development academies at which district and agency employees can receive instruction from experts in various transportation-related fields. The following academies are currently available:

- Project Engineer Academy
- Project Management Academy
- Design Senior Seminar

Specialized Training

Specialized training is also provided. Headquarters Division of Design staff will present this training to district management and district staff as appropriate. Such training will be implemented in the following areas, as new policies and procedures are issued:

- Project development process and design policies, standards and practices
- Highway geometric design
- Pavement structural section design
- Highway drainage design
- Value analysis

On-the-Job Training

On-the-job training (OJT) modules have also been developed by the project planning and design function of the Headquarters Division of Design. These modules are updated periodically to incorporate the latest state-of-the-practice. The on-the-job modules are designed so that classes can be held at the trainee's job location and can be taught by individuals from the district or Headquarters unit that the trainee is sourced to. A list of available on-the-job modules follows:

- Basic Design Policies
- Geometric Design I - Alignment and Grade
- Geometric Design II - Cross Section Elements
- Geometric Design III - Intersections At- Grade
- Geometric Design IV - Interchanges
- Highway Drainage Design I - Hydrology
- Highway Drainage Design II - Open Channels
- Highway Drainage Design III - Cross Drainage
- Highway Drainage Design IV - Roadway Drainage
- Structural Roadbed Design I - Subgrade Soils
- Structural Roadbed Design II - Pavements
- Structural Roadbed Design III - Pavement Rehabilitation

SECTION 3 District

Coordination with Outside Entities

The districts are Caltrans' contacts with outside entities and the public. (See Figure 2-1 for a map of the 12 Caltrans districts.) In those instances where an outside entity initiates a project on a State highway, the district is responsible for coordinating processes with the outside entity to ensure compliance with project development procedures. (See Sections 5 and 6.)

District Director

District Directors have been assigned the responsibility, approval authority, and accountability for those project development decisions within their district that will lead to the timely delivery of projects - within budget. District Directors are accountable for ensuring that their district follows the policies and guidelines contained in this manual. This includes setting project goals, priorities, staffing plans, project delivery milestone dates, and capital cost budgets. Within tailored districts much of this responsibility resides with the District Director of the regional district, and is spelled out in the delegation of authority document applying to the particular district.

Deputy District Director Design

The Deputy District Director for design supervises and monitors the work of the design and related support units. This division chief is the functional manager for this function, and negotiates and comes to agreement with project managers to provide needed services. This function does not exist in tailored districts.

Deputy District Director Project Management

The Deputy District Director for project management, also known as the Single Focal Point, supervises and monitors the work of the project managers. The division chief has overall responsibility for project delivery consistent with each project's scope, cost and schedule. This function does not exist in tailored districts.

Deputy District Director Project Coordination

The Deputy District Director for project coordination provides district coordination for the project managers in the regional district. This function only exists in the tailored districts.

Project Manager

A single project manager is to be assigned to coordinate and monitor all elements of the project development process for a specific project, including the timely delivery of the project—within budget. (See the *Caltrans Project Management Handbook*.)

Project Control Specialist

A project control specialist handles a project or group of projects. On request, the specialist consults with the project manager and project engineer (PE) to forecast project activities and milestone dates; monitor progress; and update schedules and costs as necessary. The specialist provides a service to the project manager on any given project.

Design Senior

A design senior assures the quality of the engineering products turned out by the unit. Quality can be achieved through thoughtful adherence to Caltrans policies and procedures, and willing participation with other disciplines, agencies and community representatives. A quality design is one that is delivered within the project's scope, schedule and cost, and is biddable and buildable as submitted. It is one that meets the project's stated purpose-and-need, incorporates safety for the traveling public and Caltrans maintenance forces, has an acceptable environmental impact, and is compatible with the values of the communities in which it lies.

Project Engineer

The project engineer is the lowest-level registered civil engineer in "responsible charge" of appropriate project development documents (project study report, project report, and etcetera) and project design. The project engineer is a member of the project development team (PDT).

"Responsible charge of the work" is defined in Section 6703 of the Professional Engineers Act of the *California Business and Professions Code* as "the independent control and direction, by use of initiative, skill and independent judgment, of the

investigation or design of professional engineering work or direct engineering control of such projects."

The project engineer coordinates closely with other functional units throughout the project development process and notifies other functional managers and staff of design changes as soon as feasible. Likewise, other functional units must communicate and coordinate closely with the project engineer whenever technical questions arise regarding the overall engineering effort. Additionally, each functional unit must keep the project manager informed of those technical issues that will affect the overall cost, scope, schedule or quality of the project. The project engineer, however, as the individual signing the title sheet, is responsible for the integration of all the engineering elements needed to make up a complete and comprehensive, quality plans, specifications, and estimate (PS&E) package. Only in this way can the project team continue to succeed in meeting their project delivery commitments.

Managing a Specific Project

Specific projects are guided and developed by a PDT, managed by a district project manager who is usually the team leader. Applicable functional managers and functional units support the PDT. Section 4 describes these roles and responsibilities in detail.

Responsibility for State Highway Improvements

All improvements to State highways are considered to be Caltrans projects. This applies even if the project will be financed by others. As owner-operator of these transportation facilities, Caltrans is responsible for operation, maintenance, and tort liability after construction. Caltrans is also responsible for providing for the authorized expansion of the system and for assessing the impact of improvements proposed by others to the existing system.

To ensure that transportation facilities are well designed, safe, and properly constructed, all project planning, design, right-of-way acquisition, and construction should be performed in accordance with Caltrans standards and practices and according to Caltrans project development process.

The district provides staffing to the normal planned program outlined in the various State programming documents. (See Section 5 for staffing of projects-funded-by-others.)

FIGURE 2-1 District Numbers and District Office Locations

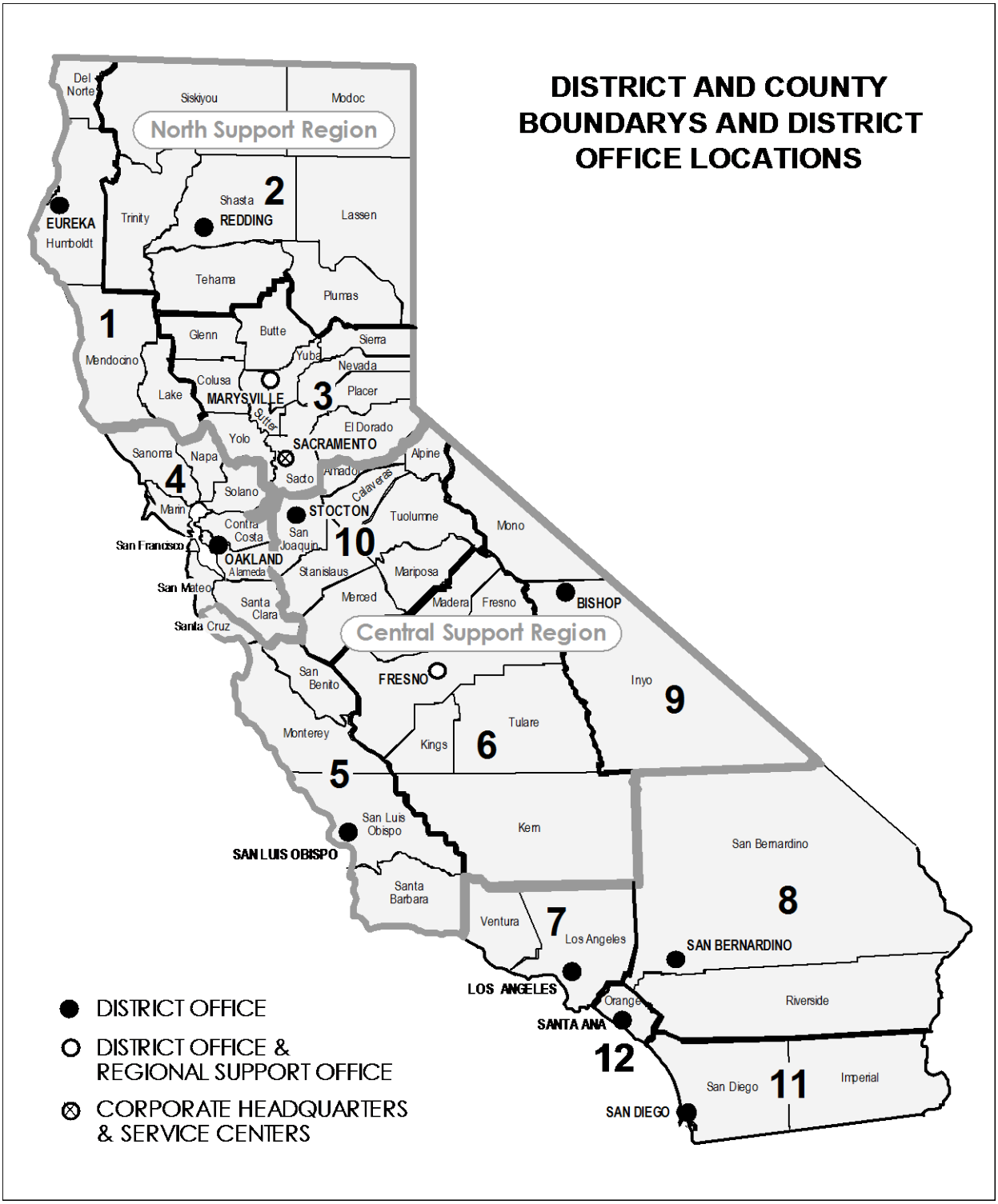

SECTION 4 Project Management

Philosophy

Project management has been implemented by Caltrans to enhance project control and maximize the use of limited resources. The objective is to establish realistic project goals and then to control the progress of work such that quality projects are delivered within planned budgets and schedules.

According to this philosophy, a single project manager is assigned to control all elements of the project development process for a specific project.

The requirements of a specific project take precedence over other requirements of the functional organization that supports it. Functional managers should consider project work as top priority in accordance with agreements established with project managers.

Coordination Among Project Management Personnel

Continual and close coordination must be maintained between top district management and the personnel assigned to manage the specific project: the PDT, the project manager, and the project engineer. District management is responsible for development and timely delivery of all district projects.

Project Manager

The project manager is responsible for all project development steps from project initiation to close out of the construction contract. With project responsibility clearly assigned to a single project manager, the project can be more successfully planned, managed, and delivered.

A project manager will normally be assigned before the project initiation process begins. This also applies to projects developed by other Caltrans functional units such as planning or traffic.

Resources should be assigned to a project based on the project work plan developed by the project manager and the PDT (see Chapter 1, Section 5). The project manager should have the authority to control the designated resources and schedules. The project manager must use resources wisely and develop the project using accepted

engineering standards and policies. The project manager should exercise appropriate authority to manage the allocated project resources and schedule and is held accountable for delivering a quality product on-schedule and within budget.

For additional information and discussion, please refer to the *Caltrans Project Management Handbook*.

Project Engineer

The project engineer is in "responsible charge" of preparation of appropriate project development documents (project study report, project report, and etcetera) and the project design effort. Manuals and policies provide standards and guidance, but the project engineer must develop the project by proper application of these policies and standards.

Functional Managers

The functional managers supervise the Caltrans functional units that provide technical data and plans to the project engineer and schedule and resource data to the project manager.

District functional units may operate in the traditional manner, but the functional-unit resources required for the project must be committed to the project manager to ensure that schedule obligations are fulfilled.

See Chapter 3 – Involvement of Caltrans Functional Units, for more information.

SECTION 5 Special Funded Projects and Related Projects

Special Funded Projects

A special funded project is any project located on the State Highway System that (1) is developed and constructed using local or private funds, and (2) that has a construction cost over $1,000,000 for work within the existing or future State highway right-of-way. There are four types of projects-funded-by-others, described in the following text.

Local Sales Tax Measure Projects

These are State Highway System projects identified in an approved sales tax measure expenditure or strategic plan—funded 50 percent or more from local sales tax revenues—and having no funding in State programming documents. See Chapter 4 – Programming, for more information.

Funds are generated from a voter-approved county-wide sales tax increase for transportation. Typically, sales tax measure projects are highway capacity improvement projects of county-wide significance that expand the transportation system: new routes, lane additions, major interchange improvements, transit projects in shared right-of-way, etcetera.

As owner-operator responsible for providing for expansion of the State Highway System, Caltrans is responsible for performing and funding all project development work through the environmental document (ED) and project approval phase. If Caltrans cannot comply with the schedules established by the sales tax measure authority for the approval of the project study report (PSR) and the environmental document approval, then the authority may undertake this work at authority expense—with appropriate oversight provided and funded by Caltrans.

The sales tax measure authority is responsible for funding and performing all project development, right-of-way, and construction following approvals of the environmental document and the project. Caltrans provides oversight of such activities at Caltrans expense. If requested by the sales tax measure authority, Caltrans may perform some of the services the authority is responsible for, on a reimbursed basis, if Caltrans has sufficient reimbursed budget authority.

To set forth the responsibilities and funding for the various phases of project development and construction for sales tax measure projects on the State Highway System, one or more cooperative agreements between the State and the sales tax authority will be required. (See the *Cooperative Agreement Manual* for more information.)

Locally Funded Projects

These are defined as local-agency sponsored, non-sales-tax-measure projects on the State Highway System having no funding in a State programming document.

Funds may be generated from developer fees and contributions, assessment districts, local share of State gas taxes, local property taxes, local Federal-aid, and non-highway federal programs. Funds may also include sales tax measure revenue, if the total is less than 50 percent of the total construction cost and is included in a strategic or expenditure plan, or the total is more than 50 percent of the total construction cost and is not included in a strategic or expenditure plan.

Locally funded projects are typically highway projects of local significance, such as relatively minor interchange improvements, intersection improvements, over - crossing improvements, and signalization projects: projects that do not expand the transportation system.

As owner-operator responsible for assessing the impact of improvements on the existing State Highway System, Caltrans is responsible for the preparation of the PSR, at Caltrans expense. It is the responsibility of the local agency to provide suitable engineering data, as well as technical and financial information needed for Caltrans to prepare the PSR. The local agency may prepare and submit an unsigned PSR, at its own expense, to expedite the project development process. All subsequent project development, right-of-way, and construction activities are to be performed and funded by the local agency, with Caltrans providing oversight at Caltrans expense. If requested by the local agency, Caltrans may perform some of the services for which the local agency is responsible, on a reimbursed basis if Caltrans has sufficient reimbursed budget authority.

To set forth the responsibilities and funding for the various phases of project development and construction, one or more cooperative agreements between the State and the local public agency will be required for all locally funded projects on the State Highway System. (See the *Cooperative Agreement Manual* for more information.)

Privately Funded Projects

These are defined as projects on the State Highway System that are sponsored by a private, non-public entity having no funding in a State programming document.

Once a proposed privately funded project is identified, a decision must be made in designating the project sponsor. Caltrans strongly encourages local public agencies to sponsor privately funded projects to demonstrate community acceptance of the project and to improve coordination with other local agencies. If a proposed privately funded project is sponsored by the local public agency, then it will be processed as a locally funded project. Caltrans will work directly with the private sponsor if a local public agency does not sponsor the privately funded project.

As owner-operator responsible for assessing the impact of improvements on the existing State Highway System, Caltrans is responsible for the preparation of the PSR at Caltrans expense. It is the responsibility of the private project sponsor to provide suitable engineering data, as well as technical and financial information needed for Caltrans to prepare the PSR. The private project sponsor may prepare and submit an unsigned PSR, at its own expense, to expedite the project development process. The private project sponsor is responsible for performing all subsequent project development, right-of-way, and construction activities, with Caltrans providing oversight at the private project sponsor's expense. If requested by the private project sponsor, Caltrans may do some of the services for which the private project sponsor is responsible, on a reimbursed basis if Caltrans has sufficient reimbursed budget authority.

A highway improvement agreement accompanied by an escrow agreement, if applicable, will be required for all privately funded projects. If Caltrans will do the work on a reimbursed basis, an additional agreement is required to provide for the reimbursement.

Public Toll Road Facilities

These (not the "privatization" toll road projects) are defined as projects authorized under *California Streets and Highways Code*, Sections 531, 541, and 561. These sections authorized the creation of specific locally funded toll road facilities in Orange County which are to become part of the State Highway System and maintained as authorized under *California Streets and Highways Code*, Section 188.4.

As future owner-operator of the public toll road facilities, Caltrans is responsible for providing oversight of the local toll road project development (including compliance with Caltrans design standards) through construction. If requested by the toll road authority, Caltrans may do some of the work for which the toll road authority is responsible, on a reimbursed basis if Caltrans has sufficient reimbursed budget authority. One or more cooperative agreements between the State and the toll road authority will be required to cover responsibilities and funding, including maintenance, operation, and acceptance into the State Highway System.

Complementary Programs

Listed next are definitions of other types of projects that are complementary to special funded projects.

Encroachment Permit Projects

These are defined as projects on the State Highway System sponsored by either a local public entity, a local sales tax measure authority, or a private entity, with construction costs of $1,000,000 or less, within the existing or future State Highway right-of-way. Such projects will follow established State policy and procedures for encroachment permits, including the preparation of the permit engineering evaluation report (PEER) or any other appropriate report, such as a combined project study report-project report (PSR-PR) format or a project report. A cooperative agreement or a highway improvement agreement will normally not be required for encroachment permit projects. However, certain types of encroachment permit projects may require some type of an agreement. These types could include signal construction, landscaping construction, and noise barrier construction.

The State representative responsible for overseeing the project construction will be provided by the construction unit if construction cost exceeds $300,000. Projects with construction costs of $300,000 or less may be overseen by either the construction unit or the permits unit.

All projects-funded-by-others, not just those that are called encroachment permit projects, require an encroachment permit whenever the project sponsor, its consultants, or its contractors work within the existing State highway right-of-way.

Jointly Funded Projects or Cooperative Projects

These are defined as projects that involve combinations of special funds (local, sales tax, or private) and funding contained in State programming documents. Roles, responsibilities, and funding must be defined in one or more cooperative agreements, regardless of the amount contributed by the project sponsor or Caltrans.

For projects where Caltrans is performing project development, right-of-way, or construction support, the project sponsor shall reimburse Caltrans for their support costs in the same proportion as the project sponsor's share of the total project capital cost, unless other equitable arrangements are specified in the cooperative agreement. (See the *Cooperative Agreement Manual* for more information.)

Project Development Appeal Process

The process described here is used to address disagreements between local funding sponsors and the Caltrans district or FHWA on projects proposed on the State Highway System. The appeal process enables the project sponsor a means to resolve disputes concerning the project concept, scope, or design standards.

On projects funded by others, disagreement over scope and design standards should be resolved early in the project development process and documented through a PSR and cooperative agreement.

When there is disagreement on project concept, scope or exceptions to mandatory and advisory standards the project sponsor may request review of the District's decision by the Caltrans Deputy Director, Project Development. A request for a review of the district's decision is prepared by the project sponsor and submitted to the District Director for use in discussions with the Deputy Director, Project Development. This request is the local sponsor's final recourse.

The request must include the background of the project, nature of the concept or scope disagreement or requested design standard exception, and the purpose and justification for the requested concept or scope change or design exception. The justification should include all pertinent reasons why the sponsor is requesting or disputing the concept or scope change or requesting the design exception, including but not limited to cost increases, schedule delays, unavailability of right-of-way, or environmental issues. Alternatives to the exception must be addressed and the reasons for dismissal of the alternatives must be documented. Where a concept or scope change is involved, there must be a discussion on how this change affects the project contained in the regional transportation plan (RTP) and Federal Transportation Improvement Program (FTIP) air quality conformity analysis.

The District Director reviews the request for completeness and accuracy and obtains any additional information which may be needed from the project sponsor. The District Director also prepares information on why the project sponsor's request was denied.

Both the project sponsor's request for review and the District Director's reasons for denial must be submitted to the Deputy Director, Project Development, prior to discussion of the issue with the Deputy Director, Project Development. The discussion, with all of the involved parties, including the project sponsor and FHWA, will consider both sides of the issue, following which the Deputy Director, Project Development, will make the final decision on the matter. The project sponsor will be informed of the decision by the District Director.

All reviews and discussions of the issue should be timely to avoid jeopardizing the project's scheduling and funding.

Cooperative Agreement Considerations

A cooperative agreement must be executed by the person that was authorized by resolution of the city council or the board of supervisors that approved the agreement. To expedite project delivery, a draft cooperative agreement may be submitted with the PSR. A preapproved cooperative agreement should be used if appropriate.

A subsequent cooperative agreement may be needed to reimburse Caltrans for contract administration during the construction phase. Such an agreement is usually negotiated when the PS&E is nearing completion and construction costs and special contract provisions have been more clearly defined.

Caltrans does not use cooperative agreements with private parties. Every effort should be made to work through the local entity rather than directly with a private party. Should this fail, the district must then enter into either a highway improvement agreement (described previously under "Privately Funded Projects") or some other type of agreement with the private party.

For additional information, refer to Chapter 16 – Cooperative Agreements, as well as the *Cooperative Agreement Manual*.

Local Use of Consultants

Local entities have the prerogative to use consultants for any work on a special funded project that is their responsibility and that was provided for in the cooperative agreement. However, Caltrans will monitor and participate in the consultant selection process and must also review the work they do on State highway improvement projects.

Local Acquisition of Right-of-Way

All right-of-way acquisition costs that are incurred after the identification of a special funded project or the passage of sales tax measures are the responsibility of the local entity. However, certain in-progress acquisitions may be completed at State expense: for instance, acquisition of hardship or protection parcels commenced prior to passage of the tax measure. If a cooperative agreement has been executed, hardship and protection acquisitions should be made on a reimbursement basis, if in accordance with the agreement.

Contract Administration

For all projects, the responsibilities of advertising, awarding, and administering are viewed as a single process: whoever advertises, generally, also awards and administers.

In the traditional program, construction contract administration is a State-only process. In the special funded program, advertising, contract award, and contract administration may be managed by the project sponsor or by Caltrans if reimbursement work is authorized.

The importance and complexity of most special funded State highway projects dictates the need for Caltrans to maintain a strong oversight of work on the existing and future State Highway System, regardless of how the work is to be financed. Caltrans makes use of local agency staffs and private consultants, while assuring compliance with Caltrans' construction standards and practices, and consistency in the administration of all construction contacts.

For all projects financed entirely with funds other than State and federal highway funds, responsibility for construction contract administration is borne by the local entity. In rare cases, a private sponsor may be responsible for contract administration. If the construction costs are $1,000,000 or less, or if the work is routine utility or drainage work, the encroachment permit process is followed.

On sales tax measure projects, if reimbursed work is authorized, Caltrans may advertise, award, and administer the tax measure authority's construction contracts, at the discretion of the District Director—if the authority is willing to accept normal Caltrans processing, procedures, and scheduling - so that the project may be processed with regular State Transportation Improvement Program (STIP) projects.

On other locally and privately funded projects, if reimbursed work is authorized, Caltrans should consider doing the advertisement, award, and administration on the following types of projects:

- Those involving major urban freeway or expressway construction with heavy public traffic moving through construction areas
- Where extensive night work will be required
- Those with long or unusual structures
- Where FHWA requires State administration

Projects on conventional highways, and projects having minimum interference with traffic on the State highway, are normally administered by local entities or private sponsors. District Directors are responsible for making the final determination and for requesting reimbursed work authority during the budget process.

Reimbursing Construction Administration

The local entity or private sponsor pays for 100 percent of the direct and indirect advertising and administration costs for all locally or privately funded construction contracts advertised and administered by Caltrans. This includes the cost of

Headquarters Division of Engineering Services-Office Engineer for advertising, opening and reviewing bids, and awarding the construction contract; the cost of Caltrans' construction engineering personnel (structure engineers, other staff and specialty personnel); and the cost of Caltrans' consultants. Time and effort expended by the district office engineer and the resident engineer shall be classified as oversight costs, to be paid for by Caltrans. The local entity or private sponsors should provide and pay for any of the remaining construction engineering team (construction field engineers, lab personnel and office engineers).

For jointly funded projects, the local entity or private sponsor reimburses Caltrans for the contract administration cost in the same proportion as their share of the total actual construction contract costs, unless other equitable arrangements are specified in the cooperative agreement.

Agreements for Construction Administration

For projects-funded-by-others, Caltrans enters into a cooperative agreement or a highway improvement agreement to cover the cost of the construction phase. The agreement specifies responsibility for construction contract advertisement, award, administration, and construction engineering. Note that landscape projects require an agreement regardless of value. Those costing $1 million or less are considered to be encroachment permit projects and require a general agreement. Refer to Chapter 29 – Landscape Architecture.

There are three ways for the local entity or private sponsor to interact with Caltrans for contract administration on State highway right-of-way. All require an agreement:

- Caltrans administers the project and provides a resident engineer and other staff and specialty personnel under reimbursement work authority. The local entity or private sponsor provides any remaining personnel required for the construction engineering team.
- The local entity administers the project under an encroachment permit, provides the resident engineer and construction engineering team, and uses Caltrans' Local Agency Automated Pay System (LAAPS) to pay the contractor. This is a local entity option; however, it requires that the resident engineer for the local entity be trained in Caltrans' Local Agency Automated Pay System and estimate system. Caltrans provides oversight.
- The local entity or private sponsor administers the project under an encroachment permit, provides the resident engineer and construction engineering team, and uses their own system of contractor payment. Caltrans provides oversight.

The agreement for construction will normally be prepared and executed during the design stage. Sufficient time should be allowed for negotiations and reviews. Duties for the local entity or consultant providing construction contract administration are covered in the agreement. Agreements will include, but not be limited to: detail funding and requirements for advertisement, award, administration and construction engineering, State furnished materials, materials testing, change orders, claims resolution, maintenance during and after construction, insurance, liability, bonding, advance deposits and escrow accounts, audits (if State or federal money is funding part of the cost), microfilm, and as-built plans.

Once the design plans are acceptable to the district, the local entity or private project sponsor should submit a request for an encroachment permit. To ensure that all real estate interests (right-of-way or utility easements) have been appropriately dealt with, a right-of-way certification is required of the local entity or private sponsor before the granting of an encroachment permit. Prior to commencement of construction work, the construction contractor for a local entity must obtain an encroachment permit. The agreement should discuss the determination of fees charged to the contractor.

Generally, encroachment permit services should be considered as oversight. Refer to the *Encroachment Permits Manual* for further information.

All work on the State right-of-way is considered a public works project, unless it is work performed solely to allow private encroachments onto the State highway or for utility or drainage encroachments within the State highway. Public works projects come under prevailing wage and related provisions.

Encroachment Permit Considerations

Encroachment permits are required in those instances where an outside party performs work within existing State right-of-way. The primary encroachment permit should be issued to a public entity for private development work when the public entity has sponsored the project. Otherwise, it should be issued to the developer or contractor and the applicable inspection fees charged.

When the encroachment (or a portion) is to be later maintained by a public entity, a second permit or maintenance agreement is required of the public entity.

When a public entity performs contract administration, an encroachment permit is also required. Under *California Streets and Highways Code*, Section 671.1 public entities are not charged fees for an encroachment permit.

For additional information, refer to the *Encroachment Permits Manual*.

Subsequent Agreements

Cooperative agreements are entered into for any applicable maintenance and operations costs that will arise after the project has been accepted into the State Highway System, regardless of the project's construction cost. Caltrans prepares and processes any necessary cooperative agreements. Maintenance agreements are also entered into or amended as necessary to cover any changes in maintenance responsibilities.

Review, Coordination, and Oversight

Although local entities and private entities are responsible for performing the work on projects-funded-by-others, Caltrans staff will still be involved in performing various activities, which may include the following: design advise or comment, environmental review or studies, issuance of notices, right-of-way processing, reviews and approvals (particularly securing of federal approvals), consultation from maintenance and operations, and furnishing project consultants with Caltrans' standards and processes.

Early Relationship

It is important to establish a cooperative and communicative relationship with the local entity or developer at the earliest possible point in the development process. A district representative should be assigned to work with the local entity or developer. This representative will serve as both the Caltrans point of contact and the Caltrans project manager.

A processing assessment will be made, an initial meeting will be held, and processing will be started, as appropriate, per this manual (for encroachment permit projects see Chapter 9 – Project Initiation). Processing as a combined PSR-PR may be agreed to at this time, if appropriate or as a PEER (also see Chapter 9 – Project Initiation for these requirements).

Single Liaison

This district representative provides a single contact point through which the outside entity will work. There should however, be flexibility to provide for direct interaction with area project development personnel as appropriate. The single contact point would also act as an ombudsman for outside entity problems or complaints.

To prevent a breakdown in communication, the assigned district representative should contact the outside entity whenever a significant lapse in communication has occurred. Each contact should be documented and copies sent to the various involved parties.

Focal Points

The following project development items require review and coordination:

- Concept approval will be established via approval of a PSR, a combined PSR-PR, or a PEER. Chapter 9 – Project Initiation identifies the circumstances that dictate the preparation, reviews, and approvals required.
- The PSR should make clear recommendations for staffing responsibilities that are to be in effect for a period extending from the execution of the cooperative agreement (after approval of the PSR) until the approval of the environmental document. Staffing responsibilities for the design, right-of-way, and construction phases should be covered in the PSR in general terms.
- Earlier confirmation (by approval of a PSR - New Connection) is required if a new connection to an expressway is proposed. See Chapter 9 – Project Initiation, and Chapter 27 – New Public Road Connections, for required reviews and approvals.
- The goal on locally funded interchange projects is to determine the design concept in considerable detail. No firm commitments can be made to local entities until Caltrans' conceptual approval is given, and FHWA's approval if on the Interstate System.

- Although the design concepts contained in a PSR contain considerable detail, they are still conceptual in nature and subject to further revision later in the project development process and therefore should not be used to identify final right-of-way requirements. If it is likely that the maps attached to a PSR will become the basis for identifying the right-of-way line, such as could occur to allow a development to proceed, all studies necessary to identify adequate right-of-way requirements need to be completed prior to PSR approval.
- Clear recommendations on staffing responsibilities for subsequent design, right-of-way activities, and construction should be included in the project report and any draft project report.
- The time schedule should be realistic. Both the local entity and the funding sponsor should be sent written confirmation of the scheduling.
- PDT meeting minutes should be taken. Copies should be sent to the involved parties.
- The district must track progress. It must inform the local entity, funding sponsor, and consultants when schedule slippage occurs and a revised schedule should be prepared and agreed upon.
- A typical section should be developed and approved early in the development process by the project proponent and Caltrans. Bridge widths should also be shown and agreed upon.
- Geometric features should be carefully studied. Formal approval must be obtained for all exceptions to design standards. Documentation is an extremely important resource for later questions by either party.
- All design plans should be carefully reviewed by the district for Caltrans requirements and standards. The Caltrans project manager will coordinate all reviews by other Caltrans units. To optimize communication, local agencies and consultants should use the Caltrans project manager as their liaison to Caltrans personnel.
- Prior to beginning detailed design, a general plan for each bridge should be submitted to the district and the Headquarters Division of Engineering Services-Structure Design for review and comment.
- Prior to preparation for advertising, the PS&E must be checked by Caltrans district personnel for adequacy and compliance with standards and approved exceptions. Caltrans' *Standard Specifications*, standard special provisions, and test methods should be used. (It is acceptable for locally administered projects to use local specifications and standard plans.)

SECTION 6 Lead Agency

General

Since the term "lead agency" is used by a variety of different programs, its definition must be clarified within the context of the associated program. For example, a lead agency is used with respect to implementation of the California *Surface Mining and Reclamation Act of 1975* (SMARA) as well as with respect to the construction contract claims process for projects-funded-by-others. For project development purposes, reference to a lead agency is made with respect to its role in fulfilling the requirements of the *California Environmental Quality Act of 1970* (CEQA):

- If the project will be carried out by a public agency, that agency must be the lead agency.
- For private projects, the lead agency must be the public agency with the greatest responsibility for approving the project as a whole - normally, the agency with general governmental powers, as opposed to one with a single or limited purpose.
- If more than one public agency qualifies, the lead agency is the one to act first on the project.
- If two or more have substantial claim, they may designate the lead by agreement.

In federal environmental terminology, the lead agencies are the agencies having the primary responsibility for preparing an environmental impact statement, one of which must be a federal agency. Normally Caltrans and FHWA are joint lead agencies under the *National Environmental Policy Act of 1969* (NEPA).

Caltrans as Lead Agency for California Environmental Quality Act

Caltrans will normally be the lead agency for CEQA for State highway projects sponsored by Caltrans, as well as for locally sponsored projects that involve new mainline development, new mainline capacity, or relief of existing highway traffic safety or congestion problems. This would include projects like mainline improvements, new interchanges, conversion of expressways to freeways, adding new lanes, traffic relief improvements such as auxiliary lanes and ramp revisions that are not related to local improvements. Caltrans may also be the lead agency if several

CEQA documents are prepared by different local agencies to cover individual segments of a complicated project.

The general rule is that only one public agency will prepare an environmental document for a project.

Caltrans is responsible for the adequacy and objectivity of the Draft environmental document, which must reflect the independent judgment of Caltrans. However, if another agency is the project sponsor, Caltrans can use information prepared by the sponsor. The local entity may draft the environmental document, but Caltrans must still review and analyze the content of the draft. In addition, Caltrans will usually handle all required public notices.

Local Agency as Lead Agency for California Environmental Quality Act

For other locally sponsored projects, the local entity may be the lead agency for CEQA. Examples of these include: a local road overcrossing of a freeway; new construction or substantial upgrading of a major element of the local road system, where a portion of the project involves a freeway interchange or State highway widening; work on the State highway that was required to improve circulation and access in order to mitigate the impacts of a large local development proposal.

Caltrans must determine that the final environmental document (FED) has been completed in compliance with CEQA; certify that it was presented to the Caltrans decision maker; and certify that the decision maker reviewed and considered the information contained in the final environmental document prior to approving the project. All other environmental work and public involvement activities can be done by the sponsor or by Caltrans (within the limits of available resources and under a reimbursable contract for services).

Caltrans as Lead State Agency for National Environmental Policy Act

When the local entity is lead agency for CEQA, and there is any FHWA involvement, Caltrans will be the lead State agency for NEPA compliance. This means that Caltrans and FHWA must be involved at the early stages in determining the requirements for environmental compliance under federal law.

If there are significant impacts involved in the portion of the project under FHWA decision authority, then (1) a draft environmental impact statement (DEIS) must be prepared and approved for circulation by Caltrans and FHWA and (2) a final environmental impact statement (FEIS) must be prepared and approved by Caltrans and FHWA. If FHWA is the sole federal agency involved in a local entity or private development project that is predominantly a non-federal action, it will not accept the CEQA document for purposes of NEPA. Consequently, a concurrent or subsequent NEPA document usually needs to be prepared that solely addresses the highway-related impacts.

If there are no significant effects involved within FHWA's scope of decision authority, and if the proposed work is not categorical excluded under the FHWA regulations, then an environmental assessment needs to be prepared that addresses highway-related impacts. This assessment must be made available to the public. Following these events, FHWA can issue a finding of no significant impact (FONSI). This can be done concurrently with CEQA processing.

SECTION 7 Federal Government

ARTICLE 1 Federal Highway Administration

Authority

The FHWA is the federal agency most typically involved with transportation projects or actions taken by Caltrans on the State Highway System and as such has the authority and responsibility for implementing and monitoring federal laws, regulations, and executive orders. FHWA is involved when a project (or action) uses Federal-aid funding, requires an FHWA approval action, or is on the Federal-aid system. Caltrans assumes some of the FHWA responsibilities, defined in a stewardship agreement between the parties, pursuant to *Title 23 United States Code*, Section 106(c).

When a federal permit is required as part of the NEPA clearance, FHWA becomes involved in the process as either the lead federal agency or as a co-lead agency. Because of these varied roles and responsibilities, FHWA works with Caltrans through several project delivery functions such as right-of-way, environmental, construction, project management, office engineer, and design and also through other divisions such as local assistance. For a thorough and precise description of the types of communications with FHWA, contact these functions for additional information and guidance.

Stewardship and Delegation of Federal Highway Administration Authority

Stewardship is the process by which federal program responsibility and accountability are delegated to state transportation agencies to act as stewards over those federal functions.

Federal law allows FHWA to delegate their review and oversight for certain activities on Federal-aid projects and to delegate additional authority for approval and administration of the Federal-aid Highway Program. FHWA always must make the final eligibility and participation decisions for the Federal-aid Highway Program.

FHWA monitors Caltrans' stewardship responsibilities through programmatic and project oversight to ensure compliance with applicable federal requirements.

Noncompliance with federal requirements risks the loss of delegated responsibilities and possibly federal funds.

See the latest *Stewardship and Oversight Agreement on Project Assumption and Program Oversight* between the Federal Highway Administration, California Division and Caltrans for the project actions assumed by Caltrans and the project actions where FHWA has retained their authority as well as the detail associated with the various oversight responsibilities.

Federal Highway Administration Oversight

FHWA involvement, as dictated by the project aspects, must begin as early as possible for all projects on the State Highway System. FHWA should be consulted so that both parties have a clear understanding of the project aspects that will require coordination and information sharing to facilitate oversight and future approvals.

The FHWA oversight activities and approvals must be documented in the reports prepared for project initiation and project approval.

ARTICLE 2 Other Federal Agencies

Authority

Federal agencies have approval or permit authority over activities on federal lands and over certain resources (such as: air and water quality, wildlife, navigable waters, etcetera) when federal actions are undertaken. Federal laws, regulations and executive orders may have a bearing on a specific transportation project and may require approvals, permits or communication with federal agencies other than FHWA. See Figure 2-2 to determine which federal agencies may need to be involved due to the location, resources which are affected, or the activities that are involved in the project.

National Environmental Policy Act Compliance

All federal actions require compliance with the *National Environmental Policy Act of 1969*. When FHWA is involved, other permitting or approving federal agencies will normally accept FHWA's NEPA determination. When FHWA is not involved in a project that requires federal action, the permitting or approving federal agency must comply with NEPA. Caltrans may be asked to prepare the draft NEPA document. See the *Standard Environmental Reference* for details.

Memorandum of Understanding Integrating the National Environmental Policy Act and Section 404 Processes

The U.S. Department of Transportation, U.S. Army Corps of Engineers, and the U.S. Environmental Protection Agency have adopted as policy (1) procedures to improve interagency coordination and (2) procedures to integrate the NEPA and the *Clean Water Act of 1972*, Section 404 processes. A memorandum of understanding was signed to implement those procedures on transportation projects in California (as well as in Arizona and Nevada).

The memorandum of understanding applies to all projects needing both FHWA/Federal Transit Administration action under NEPA and a U.S. Army Corps of Engineers individual permit under the *Clean Water Act of 1972*, Section 404. The memorandum of understanding is limited to issues pertaining to waters of the United States and associated sensitive species. Nothing in the memorandum of understanding or its appendices is intended to diminish, modify, or otherwise affect the statutory or regulatory authorities of the agencies involved.

The signatories to the memorandum of understanding are committed to integrating NEPA and the *Clean Water Act of 1972*, Section 404 in the transportation planning, programming and implementation stages of a project. They are committed to ensuring the earliest possible consideration of environmental concerns pertaining to waters of the U.S., including wetlands, at each of these three stages and place a high priority on the avoidance of adverse impacts to waters of the U.S. and associated sensitive species, including threatened and endangered species. Whenever avoidance of waters of the U.S. is not practicable, minimization of impacts must be achieved, and unavoidable impacts must be mitigated to the extent reasonable and practicable.

The memorandum of understanding signatories have integrated the compliance process for the Section 404 (b) (1) guidelines with the compliance process for NEPA to improve interagency cooperation and consultation at all levels of government throughout the process. Contact the district environmental unit if further information is needed.

FIGURE 2-2 Federal Statutes, Regulations and Executive Orders That May Affect Transportation Projects

Resource, Geographic Area, or Activity	Other Federal Agencies (Besides FHWA) Potentially Involved	Federal Statute, Regulation or Executive Order
Air	U.S. Environmental Protection Agency (EPA)	Clean Air Act (42 USC 1857 et seq) Clean Air Act Amendments of 1990 (42 USC 7401 et seq) Code of Federal Regulations: Review of New Sources and Modifications, 40 CFR 51.18; Emission Offset Interpretative Ruling, 40 CFR Part 51, Appendix S; Prevention of Significant Deterioration, 40 CFR 51.24
Fish and Wildlife Habitat	U.S. Fish and Wildlife Service; U.S. Forest Service; National Park Service; National Marine Fisheries Service	Endangered Species Act (Section 7)
Water	U.S. Army Corps of Engineers; U.S. Environmental Protection Agency (EPA); U.S. Bureau of Reclamation; U.S. Fish and Wildlife Service; National Marine Fisheries Service	Federal Clean Water Act (Section 404) Regulations Concerning the National Pollutant Discharge Elimination System (40 CFR)
Navigable Waters	U.S. Army Corps of Engineers; U.S. Coast Guard	Rivers & Harbor Act
Federal Lands	U.S. Forest Service; U.S. Bureau of Land Management; National Parks Service	
Historic Properties	Advisory Council on Historic Preservation	National Historic Preservation Act (Section 106)
Coastal Zone	U.S. Army Corps of Engineers; U.S. Fish and Wildlife Service; National Oceanic and Atmospheric Administration	
Wild and Scenic Rivers	National Parks Service	Code of Federal Regulations: 36 CFR 297; 43 CFR 8350
Wetlands	U.S. Army Corps of Engineers; U.S. Environmental Protection Agency (EPA)	Executive Order 11990 (Protection of Wetlands)
Floodplains	Federal Emergency Management Agency	Executive Order 11198 (Floodplains Management)
Hazardous Waste	U.S. Environmental Protection Agency (EPA)	Code of Federal Regulations (Title 40 CFR Part 261)
Dredging	U.S. Army Corps of Engineers; U.S. Coast Guard	
Airport Airspace	Federal Aviation Administration	Federal Aviation Regulations, Part 77
Farmland	U.S. Soil Conservation Service	Farmland Protection Policy Act

Note that this figure is not intended to be all inclusive.

SECTION 8 Use of Consultants

General

As authorized by *California Government Code*, Sections 14131, 19130, and 14101 Caltrans uses consultants for some professional and technical services, such as architectural, landscape architectural, engineering, environmental, land surveying and material testing. Professional service contracts are awarded on the basis of qualification and negotiated costs, while some of the technical service consultants are evaluated on the basis of qualification and awarded on the basis of the lowest bid from those that meet the minimum qualification.

Methods for Contract Services

Professional and technical service contracts are written for either a specific project or for "on-call" basis. There is no dollar limit for specific contracts, but there is a maximum of $500,000 for on-call contracts. On-call contracts are used where scope of work cannot be well defined. Work is done under task orders when specific parts of the work can be defined sufficiently to estimate costs.

Contractors License

Appropriate and valid professional California license is required for the type of work being contracted.

Consultant Selection Methods

There are two consultant selection methods used when contracting out for consultant services. These two methods are the "one step" and the "two step".

"One Step" Method

The "One Step" process is appropriate for projects where the consultant is given little or no flexibility as to how the work is to be performed. The process consists of six phases as follows:

- Project Initiation
- Requests for Qualifications (RFQ)
- Final Selection
- Contract Negotiations
- Contract Award
- Contract Administration (monitoring)

"Two Step" Method

The "Two Step" selection process is appropriate for projects that could be approached in more than one way. On such a project, it is necessary that the approach to the project be carefully considered and that the consultants are invited to describe their proposed project methodologies. This is a rarely used process; when used the process consists of seven phases as follows:

- Project Initiation
- Request for Qualifications
- Request for Proposal (RFP)
- Final Selection
- Contract Negotiations
- Contract Award
- Contract Administration (monitoring)

Guidelines and Procedures

Information regarding contracting for professional services is located on the Headquarters Division of Procurement and Contracts website at: http://dpac.onramp.dot.ca.gov/

Consultant Oversight

The products delivered by consultants must follow the same procedures and conform to all of the standards that Caltrans adheres to.

SECTION 9 Signatures on Technical Reports

California Business and Professions Code

Although this section deals specifically with civil engineering requirements, reports prepared by other professionals should comply with any similar requirements specified by that profession.

California Business and Professions Code, Section 6735 requires that all civil engineering reports be prepared by either a registered civil engineer (RCE) or a subordinate under the direction of the registered civil engineer, and that all reports be signed by the registered civil engineer as an indication of responsibility for the reports. Civil engineering reports should also bear the registered civil engineer's seal or stamp—with registration number and expiration date of the registrant's certificate.

Consultants and Local Entities

The procedures that follow also apply to final engineering reports developed by consultants and local entities. A Caltrans registered civil engineer would not normally sign and seal a report prepared by others. The local agency engineer or consultant in "responsible charge" would normally sign and seal the report.

Responsible Charge

As used in the Professional Engineers Act, the term "responsible charge" refers to both the span or degree of control a registered civil engineer is required to maintain when exercising independent control and direction of civil engineering work, as well as to the specific technical engineering decisions that may only be made by a registered civil engineer.

Span of Control

The span of control necessary to be in "responsible charge" requires that the registered civil engineer:

- Personally makes all engineering decisions or at least reviews and approves proposed decisions prior to their implementation, whenever engineering decisions are made that could affect life, health, property, or public welfare. In making engineering decisions, the registered civil engineer must be physically present or, through the use of communication devices, be available in a reasonable period of time.
- Judges the qualifications of technical specialists and the validity and applicability of their recommendations before such recommendations are incorporated into technical engineering reports.

Engineering Decisions

The term "responsible charge" relates to engineering decisions within the purview of the Professional Engineers Act and does not refer to management control in a hierarchy of registered civil engineers, except where an individual in the hierarchy exercises independent engineering judgment—which would consequently constitute the exercise of "responsible charge." Engineering decisions which must be made by (and are the responsibility of) the engineer in "responsible charge," include permanent or temporary work that would create a hazard to life, health, property, or public welfare. Such decisions may include, but are not limited to, the following:

- The selection of engineering alternatives to be investigated, as well as the comparison of alternatives for engineering works.
- The selection or development of design standards or methods, and materials.
- The selection or development of techniques or methods of testing to be used in evaluating materials or completed works, either new or existing.
- The review and evaluation of manufacturing, fabrication, or construction methods or controls to be used, including the evaluation of test results, materials, and workmanship insofar as they affect the character and integrity of the completed work.
- The development and control of operating and maintenance procedures.

Evaluating "Responsible Charge"

As a test to evaluate whether a registered civil engineer is in "responsible charge," the following must be considered:

- The registered civil engineer who signs technical engineering reports must be capable of answering questions asked by equally qualified engineers. These questions would be relevant to the engineering decisions made during the individual's participation in the project and in sufficient detail to leave little question as to the registered civil engineer's technical knowledge of the work performed. Appropriate questions could address the criteria for design, methods of analysis, methods of construction, the basis for selection of materials, economics of alternative solutions and environmental considerations.
- The registered civil engineer in "responsible charge" should be able to clearly define the span of control and how it is exercised within the organization to demonstrate that he or she is accountable within the controls stated previously.

Reports that Require Professional Engineering Conformance

The following final technical reports must bear the signature, stamp or seal, registration number, and registration certificate expiration date of the registered civil engineer most directly in "responsible charge," or where applicable, bear similar data required of other registered or certified professional working on the report.

- Project study report
- Facility project study report
- Project scope summary report (PSSR)
- Draft project report
- Project report
- Project report (safety roadside rest area)
- Project study report-project report
- Permit engineering evaluation report
- Drainage report
- Materials report
- Structural section recommendation report
- Fact sheet - district prepares request for exceptions from mandatory and advisory design standards (signature and stamp or seal applies to the engineer in "responsible charge")
- Preliminary report (prepared by Headquarters Division of Engineering Services-Structure Design)

- Structures site data submittal (bridge, retaining walls, noise barriers)
- Bridge inspection report (prepared by Headquarters Division of Maintenance-Structure Maintenance and Investigations)
- Hydraulic report (prepared by Headquarters Division of Engineering Services-Structure Design)
- Geotechnical report (can include pre-remedial report concerning hazardous and toxic materials sites)
- Reports issued by the Headquarters Division of Engineering Services-Materials Engineering and Testing Services (METS) (applies to reports that go beyond the tabulation of test data: such as reports making recommendations and conclusions)

Application Procedures

Only one registrant's stamp or seal, and number with signature, are normally necessary on the final civil engineering reports listed previously. That stamp or seal and number with signature should be of the appropriate lowest classification of registered civil engineer in "responsible charge" for developing the final engineering report. This registrant's stamp or seal and number with signature need only appear on the original title sheet of most reports; however, for project initiation and project approval documents, the registrant's stamp or seal and number with signature can be placed on a separate sheet that must be a part of the report. This separate sheet must state that the registered civil engineer is attesting to the technical information contained therein and the engineering data upon which recommendations, conclusions, and decisions were based.

Coordination with Environmental Documents

Environmental documents serve as public disclosure documents, explaining the effects of a proposed project on the environment; they do not require the seal or signature of a registered civil engineer. However, technical civil engineering reports that will be used in, or which will control the detailed design and construction of, a proposed project must be signed by a registered civil engineer.

CHAPTER 3 – Involvement of Caltrans Functional Units

Table of Contents

CHAPTER 3 – Involvement of Caltrans Functional Units 3-5
SECTION 1 Transportation Planning 3-5
Reference Information 3-5
General 3-5
Reference 3-5
System Planning Products 3-6
Regional Planning Coordination 3-6
Transportation Studies Services 3-7
SECTION 2 Environmental 3-8
General 3-8
Reference 3-8
Project Development Team Member 3-8
Preliminary Environmental Analysis Report 3-9
Environmental Studies, Reports, and Documents 3-9
Public Participation 3-10
Permits 3-10
Environmental Reevaluation 3-10
Continuous Involvement 3-10
SECTION 3 Surveys 3-11
General 3-11
Reference 3-11
Project Development Team Member 3-11
Photogrammetry and Mapping 3-12
Survey Requests 3-13
Survey File 3-13
SECTION 4 Right-of-Way 3-14
General 3-14
Reference 3-14
Project Development Team Member 3-15
Project Planning 3-15
Design 3-15
Acquiring the Needed Property 3-16
Other Right-of-Way Involvement 3-17
Right-of-Way Certification 3-17

SECTION 5 Real Property Asset Management 3-18
General 3-18
Input During Planning and Design 3-18
SECTION 6 Materials 3-19
General 3-19
Reference 3-19
Project Planning 3-19
Design 3-20
Surface Mining and Reclamation Act 3-20
SECTION 7 Traffic 3-21
General 3-21
Reference 3-21
Project Development Team Member 3-21
Project Planning 3-21
Design 3-22
Input During Construction 3-22
SECTION 8 Structure Design 3-23
General 3-23
Reference 3-24
Representative on Project Development Team 3-24
Project Planning 3-24
Design 3-25
Other Services 3-26
SECTION 9 Hydraulics 3-27
General 3-27
Reference 3-27
Project Planning 3-27
Design 3-28
Structures Hydraulics 3-29
SECTION 10 Construction 3-30
General 3-30
Reference 3-30
Project Development Team Member 3-30
Project Planning 3-30
Design 3-30
Preconstruction Consultation 3-31
Project History File 3-31
SECTION 11 Maintenance 3-32
General 3-32
Reference 3-32
Project Development Team Member 3-32
Project Planning 3-32
Design 3-33
SECTION 12 Landscape Architecture 3-34
General 3-34
Reference 3-34

Project Development Team Member 3-34
Project Planning 3-35
Design 3-36
SECTION 13 Utilities 3-37
General 3-37
Reference 3-37
Project Development Team Member 3-37
Project Planning 3-37
Design 3-37
SECTION 14 District Office Engineer 3-39
General 3-39
References 3-39
Project Planning 3-39
Design 3-39
Preparing Contract Documents 3-40
Preparing to Advertise 3-40
Addenda 3-41

CHAPTER 3 – Involvement of Caltrans Functional Units

SECTION 1 Transportation Planning

Reference Information

Some of the references found in this chapter have hyperlinks that connect to Caltrans intranet pages which are not displayable to the general public. Until such time that the specific reference becomes available on the internet, the user will have to contact their district liaison, Caltrans project manager, or the appropriate Headquarters division to inquire about the availability of the reference.

General

The districts' transportation planning unit is responsible for the implementation of Caltrans policies, programs, and procedures for regional and systems planning, and for travel forecasting and analysis. Transportation planning is known by various names in different districts, including, but not limited to, transportation planning, regional planning, systems planning, transportation studies and transportation analysis.

The transportation planning unit is the liaison to Headquarters Division of Transportation Planning for regional and system planning issues, as well as matters pertaining to travel forecasting and analysis.

Reference

Refer to the Headquarters Division of Transportation Planning website for current information and services.

System Planning Products

System planning is Caltrans long-range planning process that identifies deficiencies on the state highway system, prioritizes improvements for programming funds for implementation, and manages each district's overall state highway network. Each stage of the process corresponds to a system planning document. The deficiency and improvement identification stage is through the route concept report (RCR); prioritization of funding (20 years) and implementation strategies occur through the Transportation System Development Program; communication of Caltrans priorities and strategies for route and system development to local agencies, and within Caltrans occur through the district system management plan.

The purpose-and-need for a project will often result from the system planning process. The design unit or advance planning unit uses information contained in system planning products as a starting point in initiating the project development process.

Regional Planning Coordination

Coordination with the regional transportation planning agencies (RTPAs) and the metropolitan planning organizations (MPOs) is done by the transportation planning unit. This includes monitoring their compliance with federal and State legal requirements and input into their planning and programming process with system planning data. This unit should provide project development with all necessary data concerning the regional transportation plans (RTPs), Regional Transportation Improvement Program (RTIP), air quality conformity, major investment studies, and other regional planning information.

Transportation Studies Services

Traffic forecasting is usually performed in the districts by the transportation studies unit. The forecasts are essential for all project studies that propose to increase the capacity or improve the operations of a facility to carry traffic. The following information is included in traffic forecasting:

Traffic Volumes

- Current Traffic
  - average annual daily traffic
  - peak hour and directional split for each alternative
  - level of service for existing conditions

Traffic Forecasts

- Forecasted Traffic (20 years beyond last stage of construction)
  - average annual daily traffic for each alternative
  - peak hour and directional split for each alternative
  - turning movements at proposed interchanges or intersections
  - level of service for each alternative

SECTION 2 Environmental

General

Since all transportation projects in California must comply with the *California Environment Quality Act of 1970* (CEQA), *National Environmental Policy Act of 1969* (NEPA), and other environmental laws, regulations, and executive orders, the project development process requires close coordination between the project engineer (PE), the project manager (PM), and the environmental unit representative to determine project schedules and to identify project issues, criteria, constraints, and impact mitigation.

The district's environmental unit is responsible for the implementation of Caltrans policies, programs and procedures concerning environmental considerations, analysis and compliance with environmental laws and regulations. This function is known by various names in different districts, including, but not limited to, environmental, environmental planning, environmental analysis, environmental testing, environmental technical studies, environmental engineering, environmental oversight, and environmental reports.

The Headquarters Division of Environmental Analysis develops environmental policy and procedure, recommends training to implement an enhanced environmental awareness in all employees, and provides direct project assistance in the areas of biology and cultural studies.

Reference

Refer to Chapter 2 – Roles and Responsibilities and Chapter 10 – Formal Project Studies for more information.

Refer to the *Standard Environmental Reference*, for a full description of environmental involvement in the project development process.

Project Development Team Member

A representative of the environmental unit is a required member of the project development team (PDT).

Preliminary Environmental Analysis Report

The preliminary environmental analysis report (PEAR) prepared by the environmental unit when requested by the design unit as input to a project initiation document. It identifies environmental issues that could impact the project cost and schedule.

Environmental Studies, Reports, and Documents

The environmental unit is very deeply involved during the project planning phase of project development in those projects that require an environmental document, and is involved to some degree on projects that are categorically exempt under CEQA or categorically excluded under NEPA. Upon request of the design unit, the environmental unit publishes notices, conducts a number of environmental studies, and prepares reports on them, prepares a draft environmental document, and following public input prepares the final environmental document.

For those projects not categorically exempt under CEQA or categorically excluded under NEPA (where applicable) an initial level of environmental study was completed at the Project Initiation Document (PID) Phase which resulted in the preparation of a preliminary environmental analysis report. The results of this evaluation dictate the next level of documentation necessary. Under CEQA, for those projects with no potential for significant impact, or which exhibit potential for modification such that the project as proposed will reduce any potential significant impacts to a level of insignificance, an initial study (IS) is prepared. The results of this effort provide the administrative record to substantiate issuance of a negative declaration (ND). Projects which clearly exhibit potential for residual or un-mitigable significant impacts will require an environmental impact report (EIR). Under NEPA, projects with significant impacts, as concluded under the concept of context and intensity (see the *Standard Environmental Reference*), require the preparation of an environmental impact statement (EIS). All other projects can be determined to be categorically excluded. Depending upon the nature and degree of a project's potential impacts, a finding of no significant impact (FONSI) may be prepared (the CEQA negative declaration equivalent).

If a project is determined to be categorically exempt under CEQA, it will usually be categorically excluded under NEPA. However, these projects may still be subject to other State and federal environmental laws, and may still require permits from regulatory agencies.

Note that the definition of "emergency" has a specific meaning in regard to environmental compliance (see the *Standard Environmental Reference*).

Public Participation

The environmental unit participates in most public participation activities conducted during the project planning phase of project development, including any public hearing that is held. The environmental review processes are an outgrowth of the demand that environmental concerns be fully considered in project decisions and that the public have an opportunity to be involved.

Permits

The environmental unit may obtain permits, licenses, agreements, certifications (PLAC), and approvals that are required by environment laws, regulations, and executive orders. See Chapter 13 – Project Related Permits, Licenses, Agreements, Certifications, and Approvals for a listing.

Environmental Reevaluation

The environmental unit conducts an environmental reevaluation when needed prior to advertising for construction.

Continuous Involvement

The environmental unit is involved throughout the project development process, even through construction, and beyond during maintenance and operation, whenever environmental issues arise. They must review any changes that might affect the environment and they must ensure that all environmental commitments are met.

SECTION 3 Surveys

General

The project planning and the design phases of project development both require appropriate mapping and field surveys. These services provide for all project land controls and base maps for development of contract plans and the acquisition of right-of-way.

The district's surveys unit is responsible for the implementation of Caltrans policies, and procedures concerning surveys and for conducting the surveys. This function is known by various names in different districts, including, but not limited to, surveys, right-of-way engineering and surveys, and engineering services.

The surveys unit is a liaison between the Headquarters Division of Right of Way and Land Surveys-Office of Land Surveys (which is the Headquarters functional unit with responsibility for the development of Caltrans policies, programs, and procedures in this areas), and the design unit.

Reference

Refer to Appendix L – Preparation Guidelines for Project Study Report for a discussion of mapping requirements for project initiation; to Chapter 10 – Formal Project Studies, Section 2, for a discussion of mapping during formal engineering studies during project planning; and to Chapter 14 – Preparation of Project Plans, Section 2, for a discussion of the development of geometric base maps during the design phase. Refer to the *Surveys Manual* for more detailed information on the surveys function.

Project Development Team Member

A representative of the surveys unit serves on the project development team to provide input on mapping and surveying issues.

Photogrammetry and Mapping

Caltrans photogrammetry includes the Headquarters Division of Engineering Services-Structure Design Office of Photogrammetry and Preliminary Investigations and the district photogrammetry coordinator, with assistance from private photogrammetry contractors. Caltrans photogrammetry provides a wide range of photogrammetric services to units within Caltrans. The primary focus of Caltrans photogrammetry is to provide engineers with mapping services for project development, but they also provide reproduction products and services using Caltrans' extensive film library. The responsibilities of these units are as follows:

District Surveys Unit

- Field control surveys
- Field digital terrain model surveys

District Photogrammetry Coordinator

- Liaison with project engineers
- Photogrammetric project planning (with assistance from the Office of Photogrammetry and Preliminary Investigations)
- Orders and checks photography
- Assists the Office of Photogrammetry and Preliminary Investigations in map checking (visual)
- Performs map digitizing checking (visual, computer-aided design and drafting)
- Assists the Office of Photogrammetry and Preliminary Investigations in contract administration of photogrammetry contracts

Headquarters Photogrammetry Section

- Photogrammetry expertise and assistance
- Project management
- Photogrammetry contract execution and administration
- Densifies control through aerotriangulation
- Performs map checking (accuracy and visual at district request)
- Performs all photogrammetric cross-sectioning
- Performs all photogrammetric digital terrain model data capture
- Compiles in-house mapping when required for complex, difficult to contract projects
- Computer-aided design and drafting digitizing on a limited basis

- Computer-aided design and drafting digital terrain model preparation on a limited basis

Private Photogrammetry Contractors

- Perform all aerial photography
- Perform most laboratory and reproduction work
- Performs most of the map compilation
- Performs computer-aided design and drafting digitizing

Refer to the *User's Guide to Photogrammetric Products and Services* for further information.

Survey Requests

Survey needs should be evaluated and identified early in the project initiation phase and throughout the entire project development process when needed. After the first evaluation of survey needs, the project engineer should submit the initial survey request accompanied by a strip map. The extent of the survey will depend on the type of project, existing information available, sensitivity of the area of potential effect, and the number of viable project alternatives.

The right-of-way unit and the environmental unit require accurate mapping in order to properly carry out their functions, so their needs need to be carefully considered when evaluating survey needs.

Survey File

During the design phase the project engineer should assemble the survey data and compile a survey file and transmit it to the surveys unit for use in construction surveys. The project engineer should contact the construction and surveys units and discuss what information should be included. See the survey file checklist in Appendix QQ – Preparation Guidelines for Survey File.

SECTION 4 Right-of-Way

General

Since most transportation projects in California require right-of-way, utility easements, rights of entry, or some other right-of-way activity, the project development process requires close coordination between the project engineer, the project manager, and representatives of the right-of-way engineering unit and the right-of-way unit to determine project schedules and cost estimates, and to assure the acquisition of all necessary property rights.

The district's right-of-way unit is responsible for the implementation of Caltrans policies, programs and procedures concerning right-of-way and utility considerations and compliance with State and federal laws and regulations. This function consists of various units in the districts under a district division chief for right-of-way, except for the right-of-way engineering unit which is generally located under another Deputy District Director. (Refer to Section 13 "Utilities", and Section 5 "Real Property Asset Management".)

The right-of-way unit is a liaison between the Headquarters Division Right of Way, (which is the Headquarters functional unit with responsibility for the development of Caltrans policies, programs and procedures in this area), and the design unit.

Right-of-way lead times frequently control the project design schedule. Generally, the preparation of project plans, calculation of quantities, and development of the plans, specifications, and estimate (PS&E) require less time than obtaining the right-of-way certification.

Reference

Refer to the *Right of Way Manual* for a full description of right-of-way involvement in the project development process. Also refer to Chapter 13 – Project Related Permits, Licenses, Agreements, Certifications, and Approvals; Chapter 25 – Relinquishments; Chapter 26 – Disposal of Rights-of-Way for Public or Private Road Connections; and Chapter 28 – Resolutions of Necessity for more information.

Project Development Team Member

A representative of the right-of-way unit is a required member of the project development team.

Project Planning

The right-of-way unit provides valuable information at the initiation of studies. Once the project limits have been tentatively determined, property ownership maps can be developed by the right-of-way engineering unit. Preliminary right-of-way estimates are required to properly develop and analyze project alternatives. Adequate mapping is required, as well as a realistic project scope.

The right-of-way data sheet should be requested as soon possible after project alternatives have been developed. The right-of-way data sheet is prepared during the project initiation phase and also during the formal project studies phase, and is a required attachment to the project study report (PSR), the project report (PR), and most other project initiation and project approval documents. The information in the right-of-way data sheet is vital to the process since it details all types of parcel information and the right-of-way estimate.

The right-of-way unit participates in most public participation activities conducted during the project planning phase of project development if right-of-way acquisition is involved.

Design

The project engineer and the right-of-way engineering unit work closely together in establishing the right-of-way lines. Once the geometric base maps are completed, the project engineer sets the lines (including permanent and temporary easements) and delineates access lines if appropriate. The completed right-of-way appraisal maps are sent to the PE for review to verify that the designated right-of-way lines are required to construct the project. A Certificate of Sufficiency (*Right of Way Manual* Exhibit 6-EX-9) with a Hazardous Materials Disclosure Document – Acquisition form (ENV-0001-A) for the parcels contained in the appraisal report is signed by the project engineer and design senior. See Chapter 18 – Environmental Contamination for further discussion of the Hazardous Materials Disclosure Document – Acquisition form.

Acquiring the Needed Property

Identifying the right-of-way needs and completion of the right-of-way parcel map allows the right-of-way unit to appraise the property, negotiate with the property owner for acquisition, conclude the acquisition by purchase or by starting the condemnation process, and to provide for relocation assistance for the occupants and clearance of the property for construction. During this process there should be active coordination between the project engineer and the right-of-way agent for each parcel required for the project. The acquisition agent will need to explain the project to the property owner and the need for that particular parcel. If the parcel is a partial acquisition of the property or an easement over the property, the right-of-way agent will need to explain how the property owner's remaining property will be affected by the project. The right-of-way agent may call upon the project engineer to join in meeting with the property owner to assist in explaining the project.

If the acquisition is not successfully accomplished by purchase, a resolution of necessity will have to be submitted to the California Transportation Commission (CTC) requesting authority to initiate condemnation action in court. If the property owner chooses to challenge the resolution of necessity by appearing before the CTC to protest the need for the project or the parcel, then both the project engineer and the right-of-way agent will be involved in providing information for the appearance information sheet and participating in the review procedures required by Caltrans policy (see Chapter 28 – Resolutions of Necessity and Appendix JJ – Resolutions of Necessity).

The acquisition may also require work to be accomplished to make adjustments to the property. These obligations should be placed in the right-of-way contract by the right-of-way agent and a method of accomplishing them must be agreed upon between the right-of-way agent and the project engineer. If they are to be included in the construction contract, the project engineer must assure that the work is included in the contract and documented in the resident engineer file. If they are to be done by service contract, the project engineer will need to assure that they are accomplished in a timely manner and will not interfere with the construction contract. If they are included by payment to the property owner, then this must also be documented in the resident engineer file.

Other Right-of-Way Involvement

The project engineer and the right-of-way unit work closely together in many other project development tasks. In addition to the project development team, there is team participation for hazardous waste cleanup, value analysis studies and asset management. Materials agreements involve the right-of-way unit. Fence review, excess land review, identifying water wells to be abandoned, disposal of operating right-of-way, and use of airspace are other areas of involvement.

Right-of-Way Certification

Right-of-way acquisition and the relocation of displaced people lead to a right-of-way certification, which must be provided by right-of-way before a project can be advertised. These activities involve legally mandated lead times. Changes in right-of-way requirements for a project can delay the date by which a certification can be provided if they occur late in the project development process.

SECTION 5 Real Property Asset Management

General

The Headquarters Division of Right of Way and Land Surveys-Real Property Services- Asset Management is responsible for ensuring optimum use of current real property assets and for obtaining informed investment decisions for transportation support facilities. The goal is to improve support operations and generate revenue from joint development, shared facilities, exchanges, privatization, or other innovative approaches utilizing Caltrans' real property assets. Right-of-way is also the liaison with other State agencies in coordinating joint asset management activity to meet legal requirements and to comply with the Governor's Executive Order to improve the State's management of its real estate portfolio.

Input During Planning and Design

During the planning and design stages it is important that the project engineer contact the district asset manager for input on support facility needs such as park-and-ride lots, traffic operations centers, offices, maintenance stations, etc.

The district asset manager would normally not be a member of the project development team, but should be invited to team meetings to assess potential real estate uses and address any facility needs based on master plans.

SECTION 6 Materials

General

Materials and geotechnical information is needed for every project. The project engineer uses this data to develop and analyze alternatives and estimate costs for use in project initiation and approval documents, and to prepare detail design and specifications for both new construction and rehabilitation projects. The district materials unit is involved throughout the project development process.

Reference

Refer to the Headquarters Division of Engineering Services-Materials Engineering and Testing Services (METS) website for current information and services.

Project Planning

During the Project Initiation Document (PID) phase, materials and geotechnical information is needed to adequately develop and assess project alternatives. This early information can usually be acquired from reports or data prepared for previous similar projects at the same location or for nearby projects currently under study. If there are critical unanswered concerns such as stability of slopes, foundation problems, seismic, percolation, availability of materials, etc., preliminary studies should be performed by the district materials unit. Deflection tests are required for all flexible pavement rehabilitation work.

After the project has been initiated, requests are made of the district materials unit to update materials information and provide other useful information, such as side slope recommendations, wetland locations, slide locations, etc. Some services from the Headquarters Division of Engineering Services-Materials Engineering and Testing Services (METS) may also be needed. Refer to their website for a listing of services available. As studies progress, additional materials investigations may be needed to expand previously identified alternatives or to develop new alternatives. It is essential that enough materials information is available so that all viable project alternatives are evaluated equally in draft project reports and project reports.

A final report on materials and geotechnical issues is not required at this stage, but a draft report would be appropriate.

Design

Following selection of the preferred alternative and approval of the project, a geotechnical design or materials report, as appropriate, is requested from the materials unit. It should cover pavement structural section recommendations and all other geotechnical and materials information required to construct the project, such as: geology, soils, seismic, slope stability, foundation, percolation, drains, type and availability of materials, solid waste disposal, borrow sites, disposal sites, etc. (For more information, see *Highway Design Manual* Topic 111 – Material Sites and Disposal Sites, Topic 113 – Geotechnical Design Report, Topic 114 – Materials Report, and Chapters 600 – 670 – Pavement Engineering.

Surface Mining and Reclamation Act

Design of a cost-effective project usually requires balanced earthwork quantities. In some cases commercial material must be used or an offsite borrow source acquired for imported borrow. Materials for the structural section must also be investigated to determine source locations and availability. Coordination with the environmental unit and the Surface Mining and Reclamation Act (SMARA) coordinator is needed to ensure that sites are environmentally approved and that the Surface Mining and Reclamation Act requirements are met. The California Department of Conservation maintains a list of the Surface Mining and Reclamation Act compliant operations known as the *AB 3098 List*, which is updated and published quarterly. In many areas, only commercial material or contractor-cleared materials sites are available.

SECTION 7 Traffic

General

The traffic unit's major role in the project development process is providing expertise and guidance to ensure that a project will adequately move traffic safely and efficiently, both during and after construction. This is primarily accomplished by incorporating safety features and upgrades, developing traffic handling plans delineating signing, striping and other traffic control measures and developing a transportation management plan (TMP). The traffic unit's input should begin at the conceptual phase of the project to determine what their role will be.

The traffic units are known by various names in different districts including, but not limited to traffic, traffic safety, traffic operations, traffic engineering, traffic design, traffic management, electrical design, and freeway operations.

Reference

Refer to the *Traffic Manual*, the *High-Occupancy Vehicle Guidelines*, the *Highway Capacity Manual*, the *Ramp Meter Design Manual*, and the *Transportation Management Plan Guidelines*.

Project Development Team Member

A representative of the traffic unit serves on the project development team to provide input on traffic-related issues.

Project Planning

The traffic unit provides capacity studies and operational analyses and develops safety and delay indices. It is imperative that they determine whether the project alternatives will function adequately if constructed. Questions to be answered by the traffic unit include the following:

- Can the project be signed?
- Is there sufficient room for sign structures, electrical facilities, and other?
- Should traffic signals, storage, and striping be considered?
- Have results of field safety review been incorporated when appropriate?

For projects that propose high-occupancy vehicle (HOV) lanes, *California Streets and Highways Code*, Section 149 and the *California Vehicle Code*, Section 21655.5 requires Caltrans to conduct competent engineering estimates of the effect of high-occupancy vehicle lanes on safety, congestion, and highway capacity, prior to construction. This is reported in the project report. The high-occupancy vehicle information is normally prepared by the traffic unit and is provided for inclusion in the project report. See the *High-Occupancy Vehicle Guidelines*.

Design

The traffic unit is requested to review the geometric layouts to ensure that signing requirements, stage construction, intersection operation, end of freeway plan, temporary connection plans, etc., are adequate for the safety of the motorists and of the construction and maintenance workers.

The traffic unit is provided with skeleton layouts and requested to prepare the traffic-related portions of the PS&E and related project items. This normally consists of the following elements:

- Traffic signing and striping plans
- Lane closures and lane requirement charts
- Traffic electrical plans including stage construction
- Traffic contract items and quantities
- Signing and striping for traffic handling plans
- Transportation management plans
- Special considerations such as railroad signing

Input During Construction

The traffic unit's involvement in project development does not end with the award of a construction project. At various times throughout the construction project, the unit is expected to review closure schedule change requests, proposed traffic control measures and signing and safety elements to ensure that public safety and convenience are considered. Stage construction, detours, and temporary connections may require modification to the transportation management plan in cooperation with the district transportation management plan coordinator. Traffic should be consulted prior to making changes to the transportation management plan.

SECTION 8 Structure Design

General

The Headquarters Division of Engineering Services-Structure Design is a partner in the project development process. Their responsibilities include the following:

Bridges:

- New overcrossing, undercrossing, separation and connector structures
- Bridges over waterways
- Railroad underpasses and overheads and mass transportation structures
- Pedestrian and bikeway bridges
- Widening or lengthening of existing structures
- Seismic retrofitting of existing structures

Special Structural Design:

- Retaining walls exceeding standard heights
- Noise barriers exceeding standard heights
- Box culverts and other underground structures not covered by the *Standard Plans*
- Pumping plants
- Earth retaining structures
- Signs and overhead structures
- Maintenance stations and equipment shops
- Structures at roadside rest areas, transit stations and truck inspection and weigh stations
- Other highway and transit related structures

Special Functions:

- Special studies, such as calculating capacity of major waterways
- Railroad approvals
- California Public Utilities Commission approvals
- Structure Replacement And Improvement Needs (STRAIN) Report

The Headquarters Division of Engineering Services-Structure Design has assigned a project functional manager to each district who should be contacted prior to any direct dealings with Structure Design.

Reference

Refer to the Headquarters Division of Engineering Services- Structure Design website for current information and services.

Representative on Project Development Team

A representative from the Headquarters Division of Engineering Services-Structure Design should be on the project development team for projects with extensive structure involvement. In this capacity, the representative will assist in the development and analysis of project alternatives. This includes developing architectural treatments and providing cost estimates for each viable alternative.

Project Planning

The Headquarters Division of Engineering Services-Structure Design is responsible for preparing advanced planning studies as part of the PID phase. These studies should encompass all aspects of structure work, such as new structures, widening or lengthening of existing structures, raising existing structures, rehabilitating and/or retrofitting existing structures, removing existing structures, etc. These studies can be extensive, as they have to be performed for all viable project alternatives. Efforts should be made to submit accurate data as much as possible to help achieve a reasonable assessment of cost and constructability.

The district submits profiles, typical cross sections, and span and clearance controls for all project alternatives. The Headquarters Division of Engineering Services-Structure Design responds with alternative structural solutions and cost estimates.

The Headquarters Division of Engineering Services-Structure Design continues to be involved during the remaining phases of obtaining project approval. This involvement consists of continuing membership in the project development team, the preparation of advanced studies to address additional project alternatives developed during the environmental studies stage, and the updating of structures data for the preferred alternative during the project approval process.

Design

The design process for structures involves continuous communication between the districts and the Headquarters Division of Engineering Services-Structure Design. The district starts the process by submitting a bridge site data submittal. This submittal occurs after geometrics are finalized. Other site submittals may also be required for retaining walls and noise barriers. Instructions for completing the bridge site data submittal is located at: http://www.dot.ca.gov/hq/esc/pi/

The Headquarters Division of Engineering Services-Structure Design will develop a bridge preliminary report when bridge work is required. This report translates the bridge site data submittal into a technical report that is used by the structure design engineer, and into a map showing the proposed site, contours, and structure control data. The project engineer should review this report very carefully to ensure that it accurately depicts project requirements.

After the Headquarters Division of Engineering Services-Structure Design finalizes the bridge preliminary report, the bridge general plan is prepared for the proposed structure. The general plan should be reviewed by the project engineer, including for traffic, right-of-way, and utility requirements. The district right-of-way unit should be contacted, as appropriate. Foundation studies and a foundation report are also a part of the process at this time. After district concurrence with the bridge general plan, Structure Design may proceed with the detail design.

During PS&E development, the Headquarters Division of Engineering Services-Structure Design will submit bridge unchecked details to the district. These have been prepared by one structures designer but have not been checked by a second designer; this gives the district a chance to review, check, or revise the details.

Just prior to completion of structure PS&E, the Headquarters Division of Engineering Services-Structure Design will submit bridge checked details to the district. This is the final chance to review and revise the details.

The last step in the process is for the Headquarters Division of Engineering Services-Structure Design to transmit their PS&E package to the district. The district combines the structure PS&E with the district PS&E, which is then submitted to the Headquarters Division of Engineering Services-Office Engineer to develop into a bid package.

Other Services

The Headquarters Division of Engineering Services-Structure Design performs many additional services, including the following:

Liaison with Railroad Companies

The Headquarters Division of Engineering Services-Structure Design performs the direct liaison work with the various railroad companies. The district railroad liaison helps coordinate this work, but the majority of the work and ultimate approval comes from Structure Design.

Negotiations with railroad companies are usually long and involved. Therefore, it is necessary to determine the extent of involvement as soon as practical. The district railroad liaison normally sends a strip map to the Headquarters Division of Engineering Services-Structure Design for projects in the vicinity of railroads to determine potential involvement. This is then followed by a submittal showing preliminary alignment plans at crossing locations. Structure Design identifies the railroad involvement and obtains verification from the railroad. It is also appropriate to obtain railroad approval of the geometrics at this stage.

California Public Utilities Commission Approvals

The Headquarters Division of Engineering Services-Structure Design serves as a liaison for obtaining approvals from the California Public Utilities Commission. There are usually two types of approvals: (1) changes in at-grade crossings with railroads (district prepares the exhibit maps); and (2) underpasses/overheads (Structure Design prepares the exhibit maps). Structure Design submits the proposals to the California Public Utilities Commission and notifies the district when approvals have been received. After approval, estimates are prepared showing the breakdown in costs between the railroad and the State.

SECTION 9 Hydraulics

General

The responsibility for hydraulic design policies and procedures rests with the Headquarters Division of Design; the unit that performs the project drainage design is responsible for their implementation. District organizations differ, but for the purpose of this manual, it is assumed that the project engineer, under the direction of the project manager, is responsible for assuring that proper project drainage design is performed. This will typically require the active participation in, or the review of, the design by the district hydraulics unit.

Reference

Refer to the *Highway Design Manual* Chapters 800 through 890 for information on highway drainage design. Refer to the *Storm Water Quality Handbooks: Project Planning and Design Guide* for information on incorporating stormwater quality controls into a project.

Project Planning

Detailed drainage design, such as accurate sizing and location of culverts, storm drains and roadway drainage, does not begin until after selection of the preferred alternative and approval of the project. However, the hydraulics unit should be involved during the project planning phase. Their input in the PID phase is invaluable, particularly in recommending facility types and estimating costs of large facilities.

The hydraulics unit also should be involved in the environmental studies. Early coordination between the two functional groups is important. Many projects, by necessity, will include water quality enhancement features or encroach on wetlands, floodplains, etc. When flood plain encroachment is involved the hydraulics unit should be involved in preparing the location hydraulic studies. Historical drainage maps often depict the extent of the encroachment and help determine which project alternatives should be considered. Documentation of these features must be included in the draft project report.

Design

Preparation of the drainage report by the hydraulics unit following project approval usually signifies the start of detailed drainage design. This report covers rainfall, runoff, existing flood records, gauging stations, debris and any other pertinent drainage information. The report is transmitted to the project engineer so that pertinent drainage design can be started. See Chapter 14 – Preparation of Project Plans.

Inclusion of necessary drainage information in the PS&E is the responsibility of the project engineer. To effectively carry out this responsibility, the project engineer should maintain communication with, and involvement by, the hydraulics unit in the various elements of the drainage design. Although it may not be feasible for the hydraulics unit to perform the drainage design, the more complex types of analyses should, at a minimum, be thoroughly reviewed by the hydraulics unit. Some of the items that necessitate hydraulics unit involvement are:

- storm drain design and calculations
- drainage basins exceeding 320 acres
- hydrograph development or routing
- open channel modification or realignment
- retention or detention basins
- backwater analysis
- situations with high potential for flood damage litigation
- scour analysis or sediment transport
- culvert designs greater than 36 inches in diameter
- encroachments onto Federal Emergency Management Agency (FEMA) floodplains
- modifications to inlet or outlet capacities on existing culverts or drainage inlets (e.g., placement of safety end grates, modification of side opening inlets to grated inlets, etc.)
- unique hydraulic design features (e.g., energy dissipater design, pumping stations, siphons, etc.)

Hydraulics unit involvement in the design process will ensure that proper drainage design methodology and material are utilized, that the design conforms to policy, and that other specialty units such as Headquarters Division of Engineering Services-Structure Design-Structure Hydraulics are involved as necessary.

To facilitate this involvement, the hydraulics unit should comment on proposed geometrics, typical sections, contour grading, erosion control, bridge or drainage general plans, etc., as they are developed. The drainage report, when finalized by the hydraulics unit, should be included by the project engineer in the resident engineer file.

Structures Hydraulics

The Headquarters Division of Engineering Services-Structure Design-Structure Hydraulics unit evaluates hydraulic issues (scour potential, waterway adequacy, etc.) as they relate to bridges. They typically should become involved on a project at the time of the advance planning study (APS) for the bridge. Lead time is crucial for completion of their studies. Not every advance planning study requires a complete hydraulic analysis. Contact the Headquarters Division of Engineering Services-Structure Design project functional manager as early as possible for assistance when a hydraulic evaluation is required to determine the scope of the hydraulic evaluation.

SECTION 10 Construction

General

The construction unit is responsible for administering a construction contract for the construction of the project by a contractor to ensure that the final product is in accordance with the plans and specifications, and to deal with any problems that arise in the process.

Reference

Refer to the *Construction Manual* for information on the construction phase.

Project Development Team Member

The construction unit is included as a member of the project development team to ensure that construction issues and safety design are considered from project initiation through project design.

Project Planning

The construction unit should review the alternatives during the project initiation phase to determine if they are buildable.

During environmental and project studies the construction unit should be involved in the determination of measures to reduce or mitigate construction impacts.

Design

During the design stage the construction unit should review the project plans and specifications for such things as construction safety, logical staging, the analysis of the number of working days, and special provision usability. If there is a transportation management plan, the construction unit will be heavily involved in its implementation.

It is prudent to review traffic handling design plans with an experienced resident engineer (RE) for projects in areas subject to extreme weather.

Prior to the start of construction the project engineer finalizes the resident engineer file. See Chapter 15 – Final Project Development Procedures and Appendix GG – Project Data Checklists.

Preconstruction Consultation

Prior to start of construction, the project engineer, along with other involved district units, will go over the project with the resident engineer. The review at this stage will aid in clearing up reasons for design decisions and commitments such as: right-of-way obligations, signing and traffic handling, materials sites, selected material, foundation treatment, potential slides, environmental commitments, drainage, potential maintenance problems, erosion control, public notification, proprietary materials, special considerations in contract provisions, and other appropriate items.

Contract Design Changes

On almost all construction projects, developments in the field will necessitate some design changes. For early resolution of these changes, it is essential that there be timely and effective coordination between the resident engineer, the project manager, the project engineer, and other district units that have a direct interest in the project. It is Caltrans' policy to allow only those changes that are required to complete the work as contemplated at the time the plans and specifications were approved. Proposed exceptions to mandatory and advisory design standards must be approved following the procedures in Chapter 21 – Exceptions to Design Standards.

Project History File

After completion of the construction contract the project manager is responsible for gathering the construction contract records from the resident engineer and the project planning and design data from the project engineer to put in the project history file.

SECTION 11 Maintenance

General

The maintenance unit will be responsible for maintaining the highway facility once the project is complete. It is essential that the maintenance unit be involved in the project development process from conception through construction.

Headquarters Division of Maintenance is the lead program and "first responder" for disaster response and emergency projects. Emergency projects are initiated in maintenance and if restoration design is needed, the projects are transferred to design.

Reference

Refer to the *Maintenance Manual* for details on maintenance of the facility.

Project Development Team Member

A maintenance representative must be assigned to all project development teams to insure that maintenance issues and safety design are considered. Preferably, the representative should be the field person most familiar with the project site.

Project Planning

Typical maintenance involvement would be to comment on features such as the following:

- drainage patterns—particularly known areas of flooding and debris
- stability of slopes and roadbed—can the project be built and maintained economically?
- possible material sites
- concerns of the local residents
- potential erosion problems
- facilities within the right-of-way that would affect alternative designs
- special problems such as deer crossings, endangered species
- traffic operational problems such as unreported accidents
- facility that is safe to maintain

In addition to participation on the project development team, the maintenance unit should review all project initiation and project approval documents before their approval. They should address the previously listed concerns, plus known environmentally sensitive areas.

Maintenance generates the Damage Assessment Form (DAF) for emergency work. See Chapter 9 – Project Initiation for more information.

Design

The maintenance unit should also review the proposed geometric layouts, typical sections, and final plans. Maintenance units may have input on shoulder backing materials, drainage, erosion problems, access to buildings, access for landscape facilities, access to encroachments for utility facilities, access for maintenance of noise barriers, fence and excess land review, etc. Maintenance units should also participate in the preparation of maintenance agreements (setting maintenance control limits).

The maintenance unit field representatives have a unique insight to local problems and maintenance and safety concerns. This insight must be utilized in the project development process. As the last link in the process, give the maintenance unit a chance to minimize future maintenance problems and potential lawsuits.

SECTION 12 Landscape Architecture

General

The district landscape architecture unit is responsible for the implementation of Caltrans' policies, procedures, and programs for highway planting and restoration, safety roadside rest areas, roadside enhancements (e.g., vista points, historical markers), erosion control, revegetation, wetlands/habitat restoration, and may in some cases be responsible for implementing policies, procedures, and programs for environmental enhancement and mitigation, transportation art, scenic highways, and blue star memorial highways.

In addition, the district landscape architecture unit providing functional support to the project development team for a wide variety of projects that include, but are not limited to, highway construction, multi-modal transportation facilities, park-and-ride lots, noise barriers, maintenance stations, toll plazas, and other projects requiring expertise in scenic resource evaluation, visual impact assessment, aesthetics, natural resource protection and mitigation, roadside vegetation management, water conservation, stormwater quality requirements, and community involvement.

Reference

Refer to the Headquarters Division of Design-Landscape Architecture Program website for current information and services.

Project Development Team Member

A representative of the district landscape architecture unit is offered the opportunity to serve as a member of the project development team on all projects and is a required member for planting, roadside rest and noise barrier projects.

Project Planning

Early and continuous involvement by the district landscape architect (LA) is essential for identifying and resolving project issues that can affect project schedules and estimates, construction, and maintenance considerations.

It is essential that the project manager and the project engineer be aware of potential involvement by the district landscape architect on all projects, except for routine maintenance and repair projects. During the project study phase, at a minimum, the district landscape architect is given an opportunity to review the aesthetics of a project design and potential changes to the visual environment. Major involvement includes consideration for new highway planting, replacement planting and irrigation modification, and erosion control required as a result of highway construction, and environmental mitigation involving native planting revegetation and wetlands/habitat restoration.

The district landscape architect should provide consultation on access and safe working conditions for vegetation management, site planning, and pedestrian accommodation. The district landscape architect will be responsible for coordinating initial highway planting and aesthetic reviews, assessing visual impact, and for providing input to the project study process.

The scope of aesthetic reviews and visual impact assessments should include, but is not limited to, consideration of the following:

- preservation of the natural environment
- scenic resource determination
- location, alignment, and profile of the highway or interchange
- structures such as bridges, buildings, and noise barriers
- utility hardware
- contour grading, drainage, slope treatment, and planting

During preparation of environmental documents, the landscape architecture unit participates in the development of environmental mitigation, focusing on suitability, constructability, cost effectiveness, and maintainability. This is particularly important when Caltrans' mitigation proposals have been developed to satisfy permit requirements established by federal, State, or local agencies.

The landscape architecture unit takes part in public participation activities for the purpose of receiving public input and communicating Caltrans' policies regarding programs and issues identified previously under the sub-article "General".

Design

During the design phase of highway projects the landscape architecture unit reviews the proposed geometrics and provides information on prevention of stormwater pollution, replacement planting, irrigation system modifications, and erosion control. The landscape architecture unit also conducts an aesthetics review of the project when requested and a summary of recommendations and actions.

The landscape architecture unit prepares the final plans, specifications, and estimate to be submitted with the engineering package or as a separate project for contract advertisement.

SECTION 13 Utilities

General

Most transportation projects affect existing utilities or are constructed close to them. These utilities must be identified and located, and may need to be relocated prior to construction or protected during construction. The utilities relocation unit in the district right-of-way unit, through the assigned utilities coordinator, is responsible for coordination and negotiation with the utility companies involved to determine the location of facilities and to determine responsibility for relocation costs, to decide who does the relocation, to identify design requirements for any work that must be included in the project's contract plans, and to negotiate utility agreements with the companies.

Reference

Refer to Chapter 17 – Encroachments in Caltrans' Right of Way and Appendix LL – Utilities for the treatment of utilities within the right-of-way. See the *Right of Way Manual* – Chapter 13 "Utility Relocation" for details on utility relocation.

Project Development Team Member

If significant utility investigation and relocation are involved, a representative of the right-of-way utilities unit may be added to the project development team.

Project Planning

The utilities unit provides utilities information and estimates for the right-of-way data sheet. If extensive utility relocation may be required by any of the viable alternatives under consideration, a thorough investigation of the relocation requirements must be done during the project initiation phase to obtain realistic costs and schedules.

Design

The right-of-way utilities unit should assist the project engineer in verifying the location of all existing utilities. Under normal procedures, the project engineer plots all known utilities that can be identified from field inspection, as-built plans, encroachment permits, files, etc. The utility unit then transmits the maps to the various utility companies for checking and for the addition of any facilities not shown on the maps.

The location of all utilities must be shown on the contract plans. If any of the utility facilities are to be relocated after award of the highway contract, both existing and proposed locations must be shown. This is necessary to protect the State in accordance with *California Government Code*, Section 4215.

Any necessary coordination with utilities companies is done through the utilities unit and the utilities coordinator. Each district has appointed utilities coordinators to implement Caltrans policies on the relocation and removal of utility facilities to clear transportation projects.

When utilities are located within the limits of a project, a determination must be made whether relocation is required either outside of the right-of-way or within the right-of-way to avoid conflict with planned construction. Policy concerning utility encroachments within the right-of-way is discussed in Chapter 17 – Encroachments in Caltrans' Right of Way.

Some responsibilities of the project engineer and the utility coordinator during the design phase of a project are discussed in the Appendix LL – Utilities, which is the "Policy on High and Low Risk Underground Facilities Within Highway Rights of Way." The project engineer and utility coordinator must provide for a clear and safe right-of-way through proper placement, protection, relocation, abandonment or removal of underground utility facilities that may pose a safety risk to the highway worker or user.

The project engineer must be sure that copies of utility relocation plans and notices to relocate are included in the resident engineer file. See Chapter 15 – Final Project Development Procedures and Appendix GG – Project Data Checklists.

SECTION 14 District Office Engineer

General

The district office engineer unit is responsible for insuring that the project design is complete, biddable and buildable. The district office engineer unit is expected to ensure the completeness, quality and consistency of all the plans, specifications, and estimate packages submitted to the Headquarters Division of Engineering Services-Office Engineer for processing, regardless of their origin (e.g. district, structure, consultant, or local agency). The district office engineer unit is also responsible for ensuring that PS&E submittals are prepared and processed in conformance with Caltrans policies, procedures and standards and with the *Ready to List and Construction Contract Award Guide (RTL Guide)* issued by Headquarters Division of Engineering Services-Office Engineer.

References

Refer to *Ready to List and Construction Contract Award Guide (RTL Guide)* for further information.

Project Planning

During the project planning phase, the district office engineer unit advises the project engineer and project manager on the buildability and biddability of the various alternatives, and provides unit prices for estimates.

Design

The district office engineer unit advises the project engineer and project manager during the design phase concerning the preparation of the special provisions, identification of contract items, estimating of costs, and the establishment of schedules for completion of PS&E and advertising the project.

PS&E prepared for remediation of hazardous waste in accordance with a remedial action design is processed by the district office engineer unit so that the work can be done in a preliminary contract prior to advertising the prime project.

Preparing Contract Documents

The district office engineer unit is responsible for combining the structure PS&E package with the district PS&E package so as to have one combined PS&E package. The district office engineer unit is responsible for notifying the Headquarters Division of Engineering Services-Structure Design two weeks prior to submitting a combined PS&E to Headquarters Division of Engineering Services-Office Engineer.

The district office engineer unit is responsible for the completeness, quality and consistency of PS&E submittals to Headquarters Division of Engineering Services-Office Engineer and for verifying that the design is complete and the project is biddable, and buildable. Submitting all projects to Headquarters Division of Engineering Services-Office Engineer as "qualified" projects is a goal of Caltrans for each district. "Qualified" projects are projects with PS&E that are sufficiently complete and accurate that they can be used as final contract documents with minimal processing by Headquarters Division of Engineering Services-Office Engineer.

The district office engineer unit is responsible for submitting a current right-of-way certification, justification and approvals for deviations from adopted standards and policies; copies of permits and agreements with other entities, materials information, and other documents affecting the contractor's performance of the contract, all with the PS&E submittal, or at the earliest possible date following the PS&E submittal to Headquarters Division of Engineering Services-Office Engineer.

The Headquarters Division of Engineering Services-Office Engineer draft contract comments, and issues needing resolution, are sent to the district office engineer unit for district review and response.

Preparing to Advertise

For all Caltrans projects except for Minor B projects, Headquarters Division of Engineering Services-Office Engineer there is a Ready to List (RTL) for advertisement date after determination that the contract documents have been prepared complete and accurate as to all engineering requirements (PS&E ready) and legal requirements (constraints cleared). If funding has been obtained, Headquarters Division of Engineering Services-Office Engineer schedules the project advertisement.

After the contract documents are reproduced, Headquarters Division of Engineering Services-Office Engineer returns a set of plans marked in red ("redline" plans) to the district office engineer unit indicating any changes that have been made to the plans.

Addenda

Addenda are used to effect any changes to the contract requirements of advertised projects. They are used and distributed to all concerned parties prior to bid opening and should only correct significant errors, omissions, and conflicts. If the project engineer determines the need for an addendum, a request for approval to issue an addendum is prepared (see the *Ready to List and Construction Contract Award Guide (RTL Guide)*). Concurrence is obtained from the district office engineer unit, the project manager, and if appropriate from the Headquarters Project Delivery Coordinator and the Federal Highway Administration (FHWA), and other appropriate organizations. Approval is by the Deputy District Director for design. Headquarters Division of Engineering Services-Office Engineer issues the addendum after approval. The request for addendum must be received by Headquarters Division of Engineering Services-Office Engineer a minimum of three weeks prior to bid opening, if there are plan sheet changes, and two weeks prior to bid opening for other changes, in order to avoid postponing bid opening and delaying the project.

After bid opening, changes can only be accomplished by readvertising as a new project or by contract change order during construction.

CHAPTER 4 - Programming

Table of Contents

CHAPTER 4 - Programming 4-3
ARTICLE 1 - General 4-3
Definition 4-3
Programming Documents 4-3
Revenues 4-3
Fund Estimate 4-4
ARTICLE 2 – State Legislation and Guidelines 4-4
Transportation Blueprint Legislation 4-4
Criteria for Funds Distribution 4-4
Major vs. Minor Project Programming 4-5
CTC Project Delivery Strategy 4-5
ARTICLE 3 – State, Regional, and Local Programs 4-6
STIP 4-6
TSM Plan 4-8
SHOPP 4-8
Toll Bridge Program 4-8
Other State Funding Programs 4-8
RTIPs 4-9
Congestion Management Program 4-9
ARTICLE 4 – Federal Programs 4-9
ISTEA 4-9
Federal Funding Categories 4-9
Regional Programming of Federal Funds 4-10
Federal Programming Documents 4-10
FIGURE 1 - Congestion Management Agencies (CMA) 4-12
FIGURE 2A - Plan and Program Relationships Under State and Federal Laws 4-13
FIGURE 2B - Plan and Program Relationships Under State and Federal Laws 4-14
ARTICLE 5 – State Budget Program Codes 4-15
Background 4-15
Code Definitions 4-15

CHAPTER 4 - Programming

ARTICLE 1 - General

Definition

Programming is the process by which a public agency or a private company identifies specific funds for a project, based on a projection of revenues expected to be available at a specific time in the future.

Programming Documents

Most State and federal revenues are programmed into the following documents:

- State Transportation Improvement Program (STIP)
- Traffic Systems Management (TSM Plan)
- State Highway Operation and Protection Program (SHOPP)
- Toll Bridge Program

Caltrans, regional and local agencies, and the California Transportation Commission (CTC) all have a role in developing these documents. The Programming Division submits some of these documents to the CTC for approval, some for adoption, submits recommendations to the CTC on others, and provides some documents to the CTC for informational purposes only.

County sales-tax authorities program their projects in Expenditure Plans, Strategic Plans, Plans of Finance, or other documents that are similar to the STIP.

Local agencies program their projects through a variety of documents; however, when their projects involve State highway work, funding is often based on a commitment of funds from developers, or on establishment of an assessment district.

Revenues

Revenues for transportation improvement projects are generated from a variety of sources. The primary traditional sources for Caltrans' projects are State gasoline and diesel fuel taxes, vehicle weight fees, and federal revenues. Additional sources include sales tax measures, local funds other than sales taxes, and private funds.

Fund Estimate

The Fund Estimate's statutory purpose is to project how much funding is reasonably expected to be available for adding projects to the State transportation programming documents. Most of the State and federal funding sources identified in the previous paragraph are used to prepare the Fund Estimate. The Fund Estimate covers all the State's transportation programs and statutory funds: State Highway Account, Passenger Rail and Clean Air Act Bond Fund, Transportation Planning and Development Account, Aeronautics Account, Clean Air and Transportation Improvement Bond Fund (Proposition 116), and the Toll Bridge Accounts.

State and federal resources are projected for each of the seven years covered by the Fund Estimate. A projection of non-capital expenditures and committed capital programming are subtracted from available resources, and the remaining resources in any given year, if greater than zero, are available for new programming.

ARTICLE 2 – State Legislation and Guidelines

Transportation Blueprint Legislation

The California Transportation Blueprint legislation (Chapter 105 and 106, Statutes of 1989) significantly changed the transportation programming process. A 10-year transportation funding plan was established that directed the distribution of new revenues (including proceeds of passenger rail bonds) to the various transportation program elements.

The legislation also changed the State Transportation Improvement Program (STIP) process by requiring adoption of a 7-year biennial program rather than a 5-year annual program.

Criteria for Funds Distribution

Section 188 of the Streets and Highways Code (the north-south split) legislates that 40% of certain defined funds be programmed for the 45 Northern California counties and the remaining 60% be programmed for the 13 southern counties. Section 188.8 of the Streets and Highways Code legislates that 70% of these same funds be distributed among the counties according to a formula based 75% on county population and 25% on State highway miles within the county. As defined in other statutes, these funding requirements apply to some of the transportation programs and fund types, but not to others.

Section 14529.6 of the Government Code prioritizes programming and funding of State highway projects in the following order:

1. Operation, maintenance, and rehabilitation of the State Highway System.

2. Safety improvement without adding new lanes.

3. Flexible congestion relief, traffic system management, interregional roads, and public guideways

4. Environmental enhancement and mitigation

5. Compatibility improvements, including landscaping and noise barriers.

Major vs. Minor Project Programming

The CTC has the authority to define the dollar amount that distinguishes a major project from a minor project. It uses this authority to change that amount as conditions require. Check with the Program Management Unit or the Design Coordinator for the most current limits.

Major State projects compete with each other on a statewide basis for prioritization by various programs and agencies. Priority Rating Sheets must be completed for Caltrans candidate projects. The sheets cover features such as cost, congestion, reduction in accidents, gap closures, public support, etc. Selected projects are ranked on respective program candidate lists. Candidate projects for STIP, Toll Bridge, SHOPP, and TSM Plans are prioritized and then programmed, after consideration has been given to the north-south split, county minimums, and other programming factors.

Minor State projects also compete with each other through priority lists. Each Caltrans district is given allotments each year; District Directors generally are authorized to decide which projects should be developed within these allotments, although some statewide minor programs are for specific purposes. Most Minor projects are classified as "Minor A" projects, and require CTC authorization for funding. Small Minor projects are known as "Minor B". The CTC has authorized Caltrans to match the "Minor B" limit to an amount equal to the lower limit of projects subject to the State Contract Act as set by the Director of the California Department of Finance.

CTC Project Delivery Strategy

By enacting Resolution #G-90-21, the CTC adopted a five-point strategy for project delivery, summarized as follows:

1. Highway projects must have a fully completed Project Report with project approval and a Final environmental document before they are eligible to be scheduled into the first two years of the STIP.

2. Transit projects must have a financial plan with a specific schedule for allocating funds before the project will be allowed to move into the first two years of the STIP.

3. If (a) Caltrans cannot deliver Project Reports within the schedule required for funding the first two years of the STIP or (b) is unable to deliver enough projects to utilize the funding estimated to be available in the first two years of the STIP: then regional and local agencies will be encouraged to submit STIP projects that can qualify as available for funding in the first two years

of the STIP and may be given access to available State project development funds, if appropriate.

4. Projects without a completed Project Report will be scheduled in years 3 through 7 of the STIP, with the understanding that they may be reintroduced into the first two years of the STIP when Criteria 1, 2, and 3 have been met and if the Fund Estimate still shows sufficient funding for allocation to those projects.

5. The commission will review projects in years 3 through 7 of the STIP during each off-year between STIP adoptions. to identify STIP projects that can be moved into the second year of the STIP in line for funding.

ARTICLE 3 – State, Regional, and Local Programs

STIP

The State Transportation Improvement Program (STIP) includes the six funding elements described in the titled paragraphs below. Projects are proposed for STIP programming in the Proposed STIP (PSTIP), in a Regional Transportation Improvement Program (RTIP), or in both types of documents.

The PSTIP is prepared by Caltrans and due by December 1 of odd-numbered years. The RTIPs are prepared by Regional Transportation Planning Agencies (see Figure 1 in Chapter 1) and are due at the same time. The STIP itself is adopted by the CTC by April 1 of even-numbered years.

The STIP does not include State highway projects that are 100% locally funded, nor projects funded through the State-Local Partnership Program described below.

A STIP project may not be carried forward to a succeeding STIP if its escalated cost exceeds 120% of the originally programmed amount — unless the CTC determines "that the project is the most cost effective of all the projects in the county that are not included in the program." Specific Caltrans approvals must be obtained in order to propose change to the cost, schedule, or scope of a project that is programmed. For a full discussion, see Chapter 6 of this manual. Changes to the STIP are approved by the CTC through the amendment process.

The six STIP funding elements are described below:

- Interregional Road System (IRS)

  This includes projects in the IRS plan, which was submitted to the Legislature by Caltrans in 1990. Projects must be on a system of specific routes defined in Sections 164.10 through 164.20 of the Streets and Highway Code and must be outside the boundaries of urbanized areas over 50,000 population or must meet the needs of interregional traffic, excluding needs

generated by local growth. IRS projects are usually proposed in the PSTIP, not in the RTIPs.

- Flexible Congestion Relief (FCR)

  This includes capacity enhancing projects that are not part of the IRRS plan as well as TSM-type projects that are not included in the TSM plan. Projects on local roads and urban and commuter rail corridors, as well as on State highways, may be included. FCR projects on the State Highway System can be proposed in both the PSTIP and RTIP, but projects off the State Highway system are proposed only in the RTIPs.

- Retrofit Soundwalls (SND)

  This includes the retrofit noise barrier projects from a priority list identified by Caltrans in accordance with Section 215.5 and 215.6 of the Streets and Highways Code. Retrofit soundwall projects are proposed in the PSTIP and not in the RTIPs.

- Intercity Rail (IRR)

- Commuter Rail (CRR)

- Urban Rail Transit (URR)

These last three funding elements include rail corridor projects specifically identified in the legislation. Intercity Rail projects are included in the PSTIP, while the Commuter and Urban Rail Transit projects are included in the RTIPs.

The STIP also lists Transit Capital Improvement (TCI) program projects, Proposition 116 projects, and Transportation Enhancement Activities (TEA) projects.

The Federal Intermodal Surface Transportation Efficiency Act of 1991 (ISTEA) established a separate new category of federal funding for transportation enhancement activities. The CTC has adopted guidelines to implement the TEA program in California, establishing a transportation enhancement activities sub-element of the Flexible Congestion Relief element of the STIP. These guidelines call for regional agencies to nominate projects of a regional nature in the RTIPs and for Caltrans to nominate projects of a statewide nature in the PSTIP. In the case of projects directly related to the State Highway System, the CTC may program the non-federal match from the State Highway Account.

TSM Plan

Caltrans prepares and submits the Traffic Systems Management (TSM) Plan to the CTC by December 1 of each year. It includes qualifying traffic systems management projects on State highways and local roads in major urbanized areas (including a consolidated priority list of projects submitted from local congestion management plans). The TSM Plan is not part of the STIP, but the CTC allocates the funds to projects on the TSM Plan priority list. Following passage of ISTEA, projects eligible for Congestion Mitigation & Air Quality Improvement Program (CMAQ) funding were made eligible for matching funds from funds appropriated for TSM purposes (see Article 4 of this chapter). Regional STP-funded TSM-type projects are also eligible for Sate matching funds.

SHOPP

The State Highway Operation and Protection Program (SHOPP) includes Rehabilitation and Safety (RAS) and Other Highway Construction (OHC) projects (non-capacity enhancing projects including TSM-type projects not included in the TSM plan). It also includes fund reservations for minor projects, seismic retrofit projects, and for other specific purposes. These projects are not included in the RTIPs.

The SHOPP is a 4-year biennial document prepared by Caltrans. It is prepared concurrently with the STIP. It is due no later than January 31 of even-numbered years and is approved by the CTC by April 1 of even-numbered years. The CTC only approves the level of funding in the SHOPP, not the individual projects submitted. Amendments to the SHOPP are approved by the Programming Division Chief and submitted to the CTC for information only.

Toll Bridge Program

The Toll Bridge Program is similar to the STIP, but it includes projects funded by toll revenues collected from the four toll bridge groups — North Bay, South Bay, Vincent Thomas, and Coronado. The Toll Bridge Program is submitted to the CTC as a special element of the PSTIP. Changes to the Toll Bridge Program are approved by the CTC through the amendment process.

Other State Funding Programs

State-Local Transportation Partnership Program

The State/Local Transportation Partnership Program (SLTPP) was implemented to encourage local agencies to use their own resources to fund and construct transportation improvements, both on and off the State highway system. Partnership projects are nominated by the local agencies, and all eligible projects are placed on a statewide reimbursement list. Reimbursement is based on when the local agency applies and when they award the construction contract for the project. Projects may not qualify for this program if they receive State funds from any other program.

Environmental Enhancement and Mitigation Demonstration Program

The Environmental Enhancement and Mitigation (EEM) Demonstration Program uses funds allocated by the CTC for projects listed by the State Resources Agency. Projects may be proposed by local, State, and federal agencies, as well as nonprofit entities. Projects may include highway landscaping, acquisition or enhancement of resource lands for mitigation purposes, roadside rests, roadside recreational opportunities, and other projects for mitigating the impacts of transportation facilities.

RTIPs

Regional Transportation Planning Agencies (RTPAs) and/or County Transportation Commissions must prepare and submit Regional Transportation Improvement Program (RTIPs) for regions with urbanized areas. Some urbanized RTPAs coincide with the federal Metropolitan Planning Organizations (MPO). RTIPs are submitted to the CTC by December 1 of odd-numbered years, as input to the STIP process. For maps of MPOs and RTPAs, see Chapter 1, Figures 1 and 2, respectively.

Caltrans must prepare and submit district-based RTIPs as part of the PSTIP for the remaining RTPAs — unless an RTPA notifies Caltrans by July 1 preceding the date due that they intend to prepare their own RTIP.

Congestion Management Program

Every county that includes an urbanized area is required to have a Congestion Management Program (CMP) developed, adopted, and annually updated. The CMP for each county is prepared by an agency designated by the County Board of Supervisors and the City Councils representing a majority of the urbanized-area population. The CMP includes a 7-year capital improvement program and is included in the RTIP. State and local projects must be included in the CMP before they can be entered in the RTIP. See Figure 1 in this chapter for a map of the State's Congestion Management Agencies.

ARTICLE 4 – Federal Programs

ISTEA

The federal Intermodal Surface Transportation Efficiency Act (ISTEA) of 1991 changed federal funding categories, as well as many other aspects of federal involvement with the funding and approval of transportation projects.

Federal Funding Categories

ISTEA now classifies federal funding programs as follows:

- Interstate Completion (IC)
- Interstate Maintenance (IM)

- National Highway System (NH)
- Surface Transportation Program (STP)
- Congestion Mitigation & Air Quality Improvement Program (CMAQ)
- Highway Bridge Replacement and Rehabilitation (BR) or Discretionary BR (DBR)
- Hazard Elimination and Safety (HES)
- Emergency Relief (ER)
- Transportation Enhancement Activities (TEA)
- Other, such as Minimum Allocation, etc.

Old federal funding categories such as Federal Aid Secondary (RS) and Federal Aid Urban (FAU) are no longer used, except to complete projects with committed funding from these programs.

Nearly all federal funding requires State or local matching funds. The federal government limits the total amount of federal funds available to states on an annual basis as a control on federal spending, by specifying the authorized Obligation Authority (OA). Caltrans distributes the Obligation Authority between State and local federal-aid projects as equity and delivery dictate.

Regional Programming of Federal Funds

State and federal laws provide CMAQ and Regional STP federal funds to regional agencies and counties. The annual Caltrans budget provides matching funds for eligible projects. While regional agencies program most of these funds for the local system projects, some State highway projects have also been included in their programs.

These State highway projects are administered the same as any other Caltrans project. However, federal authorization to proceed must be received through the district Local Assistance Office before beginning preliminary engineering, right of way acquisition or advertising for construction.

Federal Programming Documents

Federal law calls for a different set of programming documents than State law. Each of the 15 Metropolitan Planning Organizations (MPOs) in California (see Chapter 1, Figure 1) is required to prepare and adopt a Transportation Improvement Program (TIP, federal TIP or FTIP). This is not to be confused with the RTIP required under State law to nominate projects for the STIP. Caltrans is also required to prepare a Federal State TIP (FSTIP), not to be confused with the STIP adopted by the CTC. The FSTIP incorporates each of the 15 MPO FTIPs and also covers the portions of the State that are not within the area of an MPO. Refer to Figures 2A and 2B.

The FTIPs and FSTIP must incorporate all projects to be funded with federal funds, including transit projects, whether programmed through the State STIP, SHOPP, or TSM Plan, or through the regional STP or CMAQ programming. For CTC-programmed projects, the State programming process defines the decision-making process, while the federal process documents compliance with federal law. Important programming

requirements of federal law are that the federal TIPs must include evidence that they are constrained to the amount of funds reasonably expected to be available on an annual basis for a period of at least three years; they must include project priorities, at least on a fiscal-year basis; and they must be demonstrated to be in conformity with the air quality plan for the area. Due to air quality conformity requirements, locally funded projects are also listed in the federal documents. Federal funds will not be obligated for a project that is not included in a federally approved FTIP and FSTIP.

FIGURE 1 - Congestion Management Agencies (CMA)

FIGURE 2A - Plan and Program Relationships Under State and Federal Laws

PLANS

y

- **Caltrans System Planning Process:** Implemented by Caltrans Districts with input from other local and regional plans. Systems planning documents can become input to regional and subregional plans. They are also affected by changes in local plans and policies. Caltrans System Planning documents can include projects that are later listed in the PSTIP and other State programs.
- **Sub-Regionally Generated Plans**
  - ⇒ **Congestion Management Plans (CMP):** Required by State law and prepared by designated Congestion Management Agencies. CMPs affect and are affected by other local plans and the Regional Transportation Plan (RTP). CMPs must be consistent with RTPs and are a source for all projects listed in the RTIP.
  - ⇒ **General Plans:** Developed by cities and counties. They include a circulation element that incorporates information from CMPs, District Systems Management Plans, and RTPs. General Plans describe proposed land uses, goals, and strategies for quality-of-life issues.
  - ⇒ **Short-Range Transit Plans (SRTP):** Developed by transit agencies. They describe local transit conditions and needs. SRTPs can be input to an RTP. RTP goals and polices shape transit systems.
- **Regional Transportation Plans (RTP):** Developed by Metropolitan Planning Organizations (MPOs) and Regional Transportation Planning Agencies (RTPAs) to provide a comprehensive long-range view of the transportation problems of a region and recommended solutions. RTPs have a 20-year horizon period and are required by State and federal law. For MPO RTPs, all projects in the Federal Transportation Improvement Plan (FTIP) must be described in the RTP. In nonattainment areas, MPO RTPs must conform to a State Implementation Plan.
- **California Transportation Plan (CTP):** Developed by Caltrans for all areas of the State. The CTP is a long-range plan submitted to the Governor.
- **State Implementation Plan (SIP):** Required by the Federal Clean Air Act of 1990 as amended. The SIP is an air quality plan developed by the California Air Resources Board in cooperation with local air districts for attaining federal clean air standards.

PROGRAMS

- **Regional Transportation Improvement Program (RTIP):** A seven-year list of proposed transportation projects submitted to the CTC by the RTPA as a request for State funding through the Flexible Congestion Relief and Urban and Commuter Rail Programs. Some RTIP projects may have federal funding components, in which case they will also appear in the FTIP once they have been selected for the STIP (see below).
- **Proposed State Transportation Improvement Program (PSTIP):** A seven-year program developed by the Caltrans, that includes projects developed through the Interregional Road System Plan, Intercity Rail, Soundwall, Toll Bridge, and Aeronautics programs.
- **State Transportation Improvement Program (STIP):** A seven-year list of transportation projects proposed in RTIPs and PSTIPs which are adopted by the CTC. Those projects that have federal funding components will also appear in the FTIP and FSTIP.
- **Other State Programs:**
  - ⇒ **State Highway Operation and Protection Program:** A program limited to projects related to State highway safety and rehabilitation..
  - ⇒ **Traffic Systems Management Plan:** A program of projects (e.g., restriping, metering, HOV, ridesharing, flexible work schedules, etc.) for better system utilization and operational efficiency.
- **Federal Transportation Improvement Program (FTIP):** A three-year list of all transportation projects proposed for federal funding under ISTEA within the planning area of an MPO. It is developed by an MPO and approved by the Director of Caltrans. In air quality nonattainment areas, the plan must conform to a State Implementation Plan.
- **Federal State Transportation Improvement Program (FSTIP):** A three-year list of transportation projects proposed for funding under ISTEA developed by the State in cooperation with MPOs and in consultation with local non-urbanized governments. The FSTIP includes all FTIP projects as well as other federally funded rural projects

FIGURE 2B - Plan and Program Relationships
Under State and Federal Laws

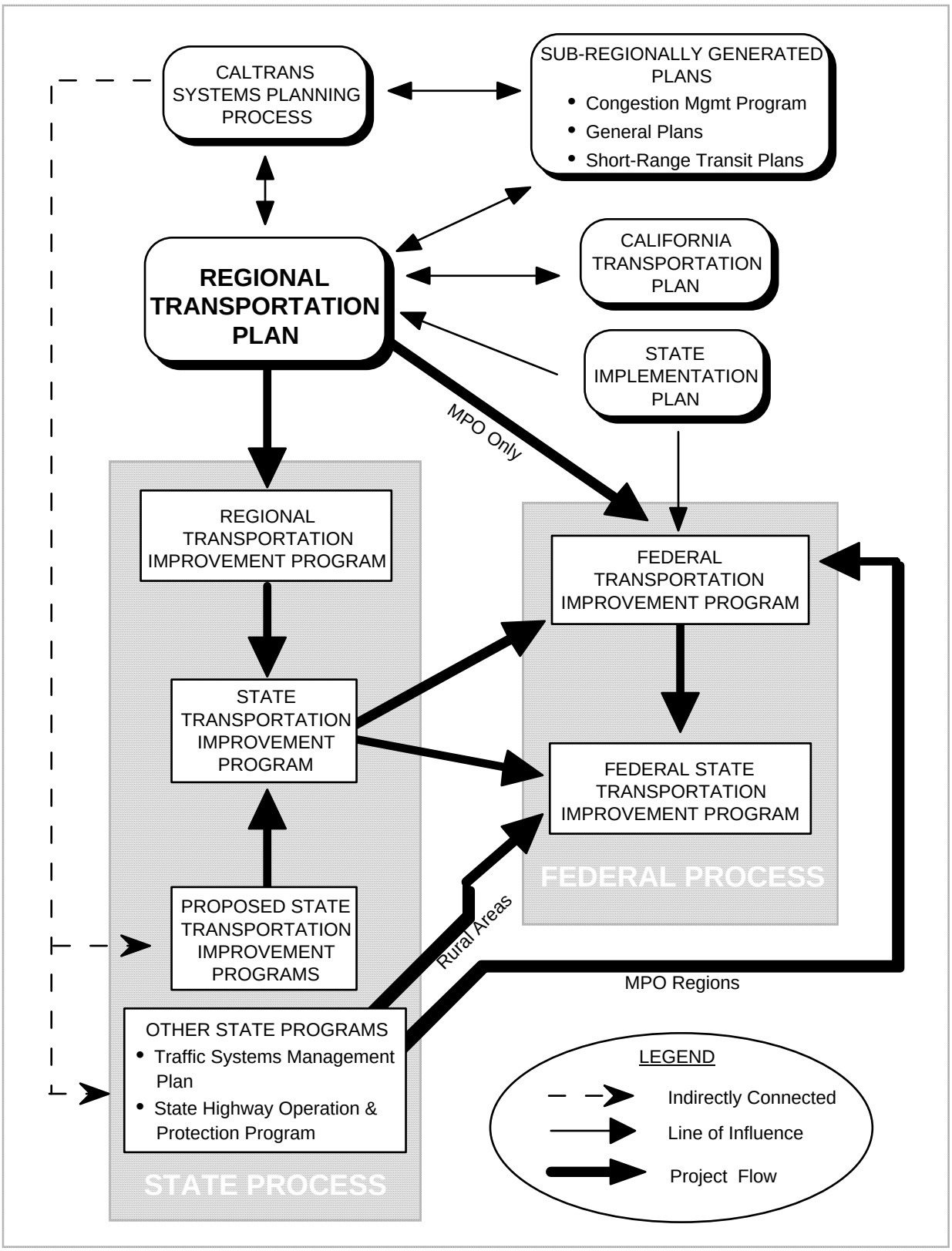

ARTICLE 5 – State Budget Program Codes

Background

Since the 1987-88 fiscal year, the Caltrans annual budget has been controlled by the State legislature. Currently, the Legislature appropriates funds for Caltrans' use via the Budget Act, on a program-by-program basis. Programs are purpose-oriented goals: they are composites of activities that together result in a specific product or achievement for serving the public need. Each transportation project identified in a State programming document is tied to an appropriate program. Programs constitute the basis for Caltrans' annual budget and are major items in the Governor's Budget.

Code Definitions

The program-code structure was originally alpha-numeric; due to its familiarity, such a structure is still being used in many documents, although the State budget has for several years used a numeric coding structure that is maintained and updated annually by the Accounting Service Center. The program codes consist of ten numeric characters, as follows:

Positions 1, 2	Positions 3, 4	Positions 5, 6, 7	Positions 8, 9, 10
"Program"	"Element"	"Component"	"Task"

Positions 1 & 2 represent the Program.

20 = Highways

Positions 3 & 4 represent the Element.

10 = Capital Support
20 = Capital Projects

Positions 5, 6, &7 represent the Component. It reflects the Transportation Blueprint Legislation elements as follows:

101 = Flexible Congestion Relief (FCR)
102 = Interregional Road System (IRS)
103 = Retrofit Soundwalls (SW)
204 = Other Highway Construction (OHC)
205 = Rehabilitation and Safety (RAS)
207 = Environmental Enhancement and Mitigation (EEM)
300 = Traffic Systems Management (TSM)
400 = Locally Funded State Highway Projects (LOC)

Positions 8, 9, & 10 represent the Task. It reflects the old program codes, with some modifications:

Land, Buildings & Facilities Improvements (HA1)

111 = HA11 (Equipment Facilities)
112 = HA12 (Maintenance Facilities)
113 = HA13 (Office Facilities)
114 = HA14 (Toll Bridge Facilities)

Facility Restoration & Replacement (HA2)

221 = HA21 (Bridge Restoration & Replacement)
222 = HA22 (Roadway Rehabilitation & Restoration)
223 = HA23 (Major Damage Restoration and Emergency Opening)
225 = HA25 (Highway Planting Restoration)
226 = HA26 (Safety Roadside Rest Area Restoration)
227 = HA27 (Urban Freeway Median Barrier Retrofit)
228 = HA28 (Urban Freeway Off Pavement Access)

Protective Betterments (HA4)

310 = HA4S1 (Structures Seismic Retrofit - Phase 1)
311 = HA4S2 (Structures Seismic Retrofit - Phase 2)
312 = HA4S3 (Toll Bridge Seismic Retrofit)
320 = HA42 (Roadway Protective Betterments)

Safety Improvements (HB1)

400 = HB1 (Safety Improvements)

Compatibility Improvements (HB3)

511 = HB311 (Community Noise Program)
520 = HB32 (Highway Planting)
530 = HB33 (Safety Roadside Rest Areas)
540 = HB34 (Roadside Enhancements)

Operational Improvements (HB4)

610 = HB4C (Capacity Increasing Operational Improvements)
620 = HB4N (Noncapacity Increasing Operational Improvements)

HOV Facilities (HB5) or ADA (HB7)

700	=	HB5 (HOV Facilities)
711	=	HB711 (New Curb Ramp - ADA)
712	=	HB712 (Park and Ride Lot Modification - ADA)

Transit-Related & Ride Sharing Facilities

800	=	HB06 (Transit-Related & Ride Sharing Facilities)

New Highway Construction (HE1)

911	=	HE11 (New Connections/Cross Traffic Improvements)
912	=	HE12 (Upgraded Facilities)
913	=	HE13 (Lane Additions)
914	=	HE14 (New Highways)
920	=	HE2 (New Toll Bridge Construction)

The above examples are limited. See the *Coding Manual* for further program definitions and additional details.

CHAPTER 6 – Project Cost, Scope, and Schedule Changes

Table of Contents

CHAPTER 6 – Project Cost, Scope, and Schedule Changes 6-3
ARTICLE 1 General 6-3
Caltrans' Goal 6-3
Change Approval Authority 6-3
District Responsible for Project Delivery 6-4
Purpose of Procedures 6-4
Processing Change Requests 6-4
Procedures for Special Funded Projects 6-4
ARTICLE 2 Definition of Terms 6-4
Programming Documents 6-4
Programmed Year 6-5
Programmed Cost 6-5
Current Project Cost 6-5
Requested Project Cost 6-5
Approved Cost 6-6
Ready to List 6-6
Project Advertisement 6-6
ARTICLE 3 Scope Changes 6-6
Scope Approval 6-6
Supplemental Project Development Reports 6-6
ARTICLE 4 Cost Changes 6-7
Source of Funding 6-7
Right-of-Way Involvement 6-7
Determination of Cost Change 6-8
General Rules 6-8
Cost Change Balance Sheet 6-9
ARTICLE 5 Schedule Changes 6-9
Schedule Commitments 6-9
Monthly Report to District Directors 6-10
ARTICLE 6 Database Management 6-10
Timely Changes 6-10

CHAPTER 6 – Project Cost, Scope, and Schedule Changes

ARTICLE 1 General

Caltrans' Goal

Caltrans' project delivery performance is judged on delivery of quality projects, on schedule, and within budget. Caltrans' goal is to excel at meeting these performance objectives, and to do so in a cost-effective manner.

Project managers shall ensure that each project has a documented review and update of the project's scope, cost and schedule, which is not more than one year old, included in the project history file. This documentation must be signed and dated by the project manager. The one-year requirement does not preclude the project manager from formally updating the scope, cost and schedule on a more frequent basis, such as at project milestones or if significant changes occur between milestones.

Also, any project change request (PCR) submitted to the Headquarters Division of Project Management for processing shall have a copy of this current documentation attached to the request.

Change Approval Authority

The Director has delegated departmental responsibility for approving changes in project scope, cost, and schedules to the Deputy Director for Finance. The Deputy Director for Project Delivery provides the necessary engineering evaluations of the district's proposed changes to guide these approvals. Approvals received through this process do not constitute a change in the programming documents. Changes in the programming documents occur either by amendments or through the normal programming process. It should be noted that only the California Transportation Commission (CTC) can change the programmed cost and programmed fiscal year for projects in most programming documents; the Division Chief of the Headquarters Division of Programming approves amendments to the State Highway Operation and Protection Program (SHOPP).

District Responsible for Project Delivery

The Director has also delegated responsibility for project delivery to the District Directors. Caltrans has made a commitment to use a project management system to ensure that the individual projects are delivered on time and within budget.

Purpose of Procedures

The scope, cost and schedule management procedures were developed to reflect Caltrans' commitment to deliver all programmed projects on schedule and within budget. They establish a process that ensures that decisions affecting delivery commitments are well documented and consider all possible alternatives. Value analysis studies are recommended to avoid the need for a cost, scope, or schedule change. The procedures also establish delegation thresholds below which the District Director may approve changes.

Processing Change Requests

The *Caltrans Project Management Handbook* and modifying memoranda provide details and format for requesting changes in project scope, cost, and schedule. Approvals delegated to the districts are also specified.

Procedures for Special Funded Projects

Procedures for management of the cost and schedule of special funded projects, which are not listed in a programming document, are provided for in the cooperative agreement for the project if done by Caltrans as reimbursed work, or otherwise is under the control of the local agency or private entity. Project scope must be in accordance with the project cooperative agreement.

ARTICLE 2 Definition of Terms

Programming Documents

- State Transportation Improvement Program (STIP)
- State Highway Operation and Protection Program (SHOPP)
- Toll Bridge Program

Programmed Year

The State fiscal year in which the project construction dollars are shown in a programming document or a subsequent amendment.

Programmed Cost

The sum of escalated construction and right-of-way costs as shown in a programming document or a subsequent amendment.

Current Project Cost

The most recent right-of-way and construction estimate for the project, as determined by the district. The estimate is un-escalated and is tied to January 1 of the State fiscal year in which the estimate is made.

Requested Project Cost

The current project cost is increased to account for inflation in future years. The Caltrans share of the current cost should be escalated as follows:

Construction Cost

Using escalation rates determined by the district, escalate the current project construction cost to the anticipated bid opening date. (This may be a different State fiscal year than is indicated in the programming document.) The construction cost reflects the estimated cost to award the construction contract.

Right-of-Way Cost

The “Cost RW1-6” screens in the Project Management Control System (PMCS) provides escalated costs in the planned years of expenditure. The escalation rate indicated on the “Cost RW1” screen can be used to adjust costs should it be necessary to advance or delay the planned expenditure. For cost comparison purposes, sum the costs for the years included in the programming document.

Approved Cost

The programmed cost, or the requested project cost approved by the Deputy Director for Finance, or where delegated, by the District Director. This approved cost does not change the programmed cost. The approved cost provides input to the next programming cycle or is a basis for preparing amendments to existing programming documents.

Ready to List

The date on which the plans, specifications, and estimate (PS&E) is complete and all other requirements (such as right-of-way certification, permits, and agreements) have been met. Achievement of the Ready to List (RTL) milestone is not affected by unavailability of funds or delayed advertisement for construction season windows.

Project Advertisement

The date on which the project is advertised for construction bids.

ARTICLE 3 Scope Changes

Scope Approval

The District Director approves the project scope, as defined in the project initiation document (see Chapter 9 – Project Initiation for types of project initiation documents). Once a project is programmed, any changes to the scope may require an amendment of the programming document.

Supplemental Project Development Reports

Any changes in scope should be discussed with the Headquarters Project Delivery Coordinator and appropriate Headquarters program advisor prior to requesting approval. A determination should be made regarding the need for a supplemental project development report. Examples of minor and major scope changes follow:

Minor Scope Changes

Minor scope changes usually do not require amendments to the programming document.

- Small changes to project limits
- Eliminating work that is not required to solve the transportation problem
- Providing required shoulders or safety features
- A change in the engineering solution to the transportation problem. (e.g., for a pavement rehabilitation project: changing from crack, seat, and overlay—to overlay)

Major Scope Changes

Major scope changes may require amendments to the programming document.

- Large changes to project limits
- Adding work that is not required to solve the transportation problem
- Adding lanes
- Not providing project features as defined in the programming document
- Eliminating work that will need to be reprogrammed in the next programming document cycle

ARTICLE 4 Cost Changes

Source of Funding

All cost increases greater than $300,000 must include a plan outlining how the required funds will be obtained. It should be noted that trade-offs can only be used between projects listed in the same programming document; in some cases the projects must be in the same county.

Right-of-Way Involvement

To ensure that current right-of-way costs are included in total project cost calculations, right-of-way staff should be contacted on all projects being reviewed for cost changes or where right-of-way requirements have changed.

Determination of Cost Change

A cost change approval is required if the requested project cost (the sum of the escalated construction and right-of-way cost) exceeds the sum of the programmed cost for construction and right-of-way as indicated in the latest adopted programming document or approved amendment. Approval should also be requested for project deletions and significant cost reductions.

General Rules

Cost management for the following programs is handled on a statewide basis by the Headquarters Division of Transportation Programming:

- Lands and Buildings Program
- Retrofit Soundwalls Program (District 7 authorized to manage their own)
- Toll Bridge Funded Program

The regional transportation planning agency position is needed when considering cost increases on STIP projects.

Due to county minimum requirements, it is best to exercise cost management within individual counties; however, it is recognized that this is not always possible. This should not be a problem for the large counties, but could be relevant in counties with small programs.

The following factors should be considered when applying savings from one project to cover increases on another:

- A transfer of savings should remain within the same programming document.
- Eligible savings are limited to the difference between programmed amount and request for funds (proposed vote by CTC). In cases where the source project is not ready for funding, the savings is the difference between the programmed amount and the requested project cost (the current project cost escalated to fiscal year of advertising). Both construction and right-of-way costs need to be evaluated to determine savings and a project change request must be processed.
- Savings between voted amount and contract award are not eligible for use in these cost management procedures. These savings are used to manage the cost increases after initial vote by the CTC. Districts have not been asked to identify funding sources related to bids being higher than the initial vote, or for changes that occur during the construction contract.

- Adoption of new programming documents establishes a new base and period for the transfer of savings. Savings on projects voted prior to the adoption of new programming documents are no longer eligible for application to other projects.
- Savings on an individual project of $300,000 or less are not eligible for applying to another project. This is because districts are not required to identify funding sources for cumulative cost increases below $300,000.
- Savings due to project deletions are available as funding sources. A project deletion request must be transmitted to the Headquarters Division of Transportation Programming for processing and approval purposes. See Chapter 9 – Project Initiation.

Cost Change Balance Sheet

District program management or project management are responsible for maintaining a separate balance sheet for the SHOPP and STIP programming documents. Individual projects are listed with their cost change indicated.

The balance sheet provides a continuous record of changes from the latest programming documents. A copy of the balance sheet should be submitted with each cost increase request.

ARTICLE 5 Schedule Changes

Schedule Commitments

Caltrans' programming documents establish a fiscal year commitment for construction funding of individual projects. The CTC staff and others evaluate our ability to meet our construction commitment.

Another delivery commitment is the Annual Project Delivery Schedules Report (Operational Plan) which establishes dates for the RTL milestone and advertising milestone. Programming documents and the Annual Project Delivery Schedules Report are used as a base for schedule control purposes.

The Annual Project Delivery Schedules Report was established to assist in managing individual project schedules. For a few projects, the report's schedules may be earlier or later than the programmed year. In these instances, the commitment to the programming document takes precedence and Caltrans must fully justify late delivery of applicable projects. The report represents departmentally approved schedules and is the base from which changes are to be requested.

If the current schedule for the RTL milestone dates is later than the delivery schedule dates, a schedule change must be approved by the district or Headquarters.

Monthly Report to District Directors

In order to track delivery accomplishments, a monthly report is distributed at the monthly District Director's management meeting. The report compares the target in the Annual Project Delivery Schedules Report against actual accomplishments for the RTL milestone.

ARTICLE 6 Database Management

Timely Changes

It is important for the districts to keep the Project Management Control System database current. Headquarters staff must be informed of district changes, including scope, cost, schedule, splits and combines, so that the appropriate files and documents can be updated.

CHAPTER 7 – Uniform File System

Table of Contents

CHAPTER 7 – Uniform File System 7-3
SECTION 1 General Guidelines 7-3
Overview 7-3
Responsibility for Managing the File System 7-3
Filing Strategies 7-3
Project History File 7-4
As-Built Plans 7-4
SECTION 2 Directory and Instructions 7-5
Overview 7-5
“Category” Heading 7-5
“Record Type” Heading 7-5
“PHF” Heading 7-5
Explanation of Categories 7-6
Oversized Materials 7-6
File Folders, Index Tabs, Filing Strategy 7-6

CHAPTER 7 – Uniform File System

SECTION 1 General Guidelines

Overview

This section provides an overview and rationale for the project development Uniform File System. Section 2, provides a directory and instructions for the project development records that are filed in the Uniform File System.

Responsibility for Managing the File System

The Uniform File System is to be used for all Caltrans projects—regardless of the size or type of project. The originating unit should start the file system as soon as preliminary studies can identify the project. The originating unit may retain copies of material needed for backup on their own studies, but the basic categorized file should be transferred to the project engineer (PE) at the appropriate time.

For projects that are transferred between districts or the Office of Central Design, the source district and the consulting unit should determine, at the time of transfer, how their respective units will maintain the project's file system. Local agencies and private consultants shall use the Uniform File System classification scheme for any records exchanged with Caltrans.

Filing Strategies

Many letters and reports cover more than one project issue. Consequently, items will be classified and filed according to the source that generated them, rather than by subject. (Filing by subject area would result in extensive duplication of materials because correspondence and reports would have to be updated for all relevant subject areas.)

The PE should use personal discretion when creating sub-categories for filing purposes. Large projects generate enough correspondence in some categories to require creation of subcategories. No master index will be required, as the categories in the Uniform File System provide adequate identification for timely retrieval.

Projects that are staged into separate contracts for construction (e.g., for grading, paving, or structures) should share the same project file. Material should be duplicated for the respective resident engineer file, but the project history file (PHF) should not be assembled until after completion of all stages.

Projects considered to be initial development for an ultimate future project (e.g., initial two-lane expressway to be expanded to full freeway) should have their own, completed project history files. The files should include sufficient data to allow for the future project development, even if the work is not yet programmed.

Projects that are split from larger projects into more manageable segments, should stand on their own; a resident engineer file and a permanent project history file should be assembled for each segment. It is prudent to break out or duplicate material at an early date, for use as a working file for the PE, and as a source for subsequent files.

Project History File

A project history file (the permanent project file) should be compiled for all completed projects. The file consists of selected project development records and final project construction records. These are to include all letters, memos, reports, etc. that document project decisions, or that would be useful (or required) to develop a subsequent project.

The Uniform File System directory indicates which project development records should be included in the project history file. The Division of Legal has approved these designated items, and the file should not be cluttered with routine records not officially designated for inclusion.

When the construction project is completed, the PE should initiate assembly of the project history file by transmitting designated records to the construction unit. The construction unit should either compile the project history file or transmit the data to the assigned district unit for compilation. The completed project history file should be permanently filed in a convenient, central file location within the district.

As-Built Plans

Caltrans maintains as-built plans to assist in the development of future projects, and to minimize possible litigation involving construction claims and exposure to tort litigation. Electronic as-built plans will be archived in the Document Retrieval System (DRS).

SECTION 2 Directory and Instructions

Overview

These instructions pertain to the directory for the project development records that should be filed in the Uniform File System. The directory follows these instructions.

"Category" Heading

The first heading in the directory is "CATEGORY." The project development Uniform File System has six major categories, as follows:

100 Project Control

200 Project Approval Process

300 External Project Design Correspondence

400 Intra-District Project Design Correspondence

500 Contract Preparation

600 Project Miscellaneous

These categories shall be used for all projects, regardless of size. Major projects shall use the complete system as shown. Smaller projects, with limited amounts of correspondence, may not require the total breakdown.

"Record Type" Heading

The second heading in the directory is "RECORD TYPE." This column describes the material to be included in each category.

"PHF" Heading

The third heading "PHF" stands for "PROJECT HISTORY FILE." This column indicates if the record should be filed in the project history file.

Explanation of Categories

Category 100 covers project control.

Category 200 is a resource file covering the project approval process. The file should contain only the specified documents and should not be cluttered with routine correspondence. All routine correspondence leading to the various project approval documents should be filed in Categories 300 and 400, as applicable.

Category 300 should contain correspondence between all district sources and external sources, except as noted above. Copies of project correspondence between Headquarters units should be filed under Category 310.

Category 400 is a source file to contain correspondence between district units.

Category 500 should contain all plans and calculations for design. Preliminary studies and plans should be filed in Category 200. All other plans, whether flat filed in drawers or rolled and placed in bins, are labeled with the appropriate Category 500 breakdown. Likewise, calculation sheets, whether in binders or file cabinet folders, should be labeled accordingly.

Category 600 covers miscellaneous items and is self-explanatory.

Oversized Materials

Attachments to letters that are too bulky for filing in regular files are referenced to the letter by date and category breakdown and then filed in separate envelopes or bins with the appropriate index label.

File Folders, Index Tabs, Filing Strategy

Index folders or index tabs are not furnished by Headquarters. The following file system directory pages may be reproduced and filed in the project history file. Index tabs can be used to identify the six major Uniform File System categories. Copies of the file system directory can be used as dividers, providing a handy reference for correct filing and compilation of the project history file.

PROJECT DEVELOPMENT UNIFORM FILE SYSTEM (100 - 143)		
CATEGORY	RECORD TYPE	PHF
100 PROJECT CONTROL		
110 EXPENDITURES		
111 Expenditure Authorizations	111.01 Planning phase (0)	X
	111.02 Design phase (1)	X
	111.03 Construction phase (3)	X
	111.04 Other phases as needed	X
	111.08 FNM-76 requests	X
112 Personnel Costs	112.01 Project design costs	X
	112.02 Final project design costs	X
	112.02 Other department costs, final project costs	X
120 DESCRIPTION		
121 Project Description	121.01 Project description and how determined	
122 Post Mile Determination	122.01 Calculations and backup data	
130 PROGRAMMING AND PROGRESS		
131 Programming Data	131.01 RTIP, PSTIP, STIP, SHOPP, etc. for project	
132 PYPSCAN	132.01 PYPSCAN milestone dates	
	132.02 Schedule calculations	
	132.03 Schedule change approvals	X
133 Progress Reports	133.01 Monthly project progress charts	
140 PROJECT COST ESTIMATES		
141 Project Cost Estimates	141.01 Log of project cost estimates	
	141.02 Cost estimate backup data	
142 Project Cost Increase	142.01 Cost change approvals	X
143 Miscellaneous Project Estimates	143.01 Study estimates for project alternatives, etc.	

PHF = Project History File

PROJECT DEVELOPMENT UNIFORM FILE SYSTEM (200 - 223)		
CATEGORY	RECORD TYPE	PHF
200 PROJECT APPROVAL PROCESS		
210 PRELIMINARY STUDIES		
211 Project Initiation	211.01 Documents that identify the problem	X
	211.02 Feasibility, justification or concept report	X
	211.09 Approvals to proceed	X
212 Project Authorization	212.01 PSR, PSSR, PSR-PR, etc.	X
	212.09 Concept approval	X
	212.10 Scope change approval	X
	212.19 CTC long lead time concurrence	X
	212.29 Approval to cease work	X
213 Planning Studies	213.01 Written notice of initiation of studies	X
	213.02 Corridor or route location studies	X
214 Alternatives	214.01 Preliminary plan and profile studies of alternatives	
	214.02 Impacts of alternatives	
	214.09 Approval of alternatives	
220 PROJECT DEVELOPMENT TEAM		
221 PDT Assignments	221.01 Authorizing assignment letter	
222 Project Category Assignment	222.01 Determination of project category, major/categorical exclusion, significant/non-significant	X
223 PDT Meeting Memos	223.01 Minutes or memos	
	223.09 Project approval memos by PDT	X

PROJECT DEVELOPMENT UNIFORM FILE SYSTEM (230 - 244)		
CATEGORY	RECORD TYPE	PHF
230 ENVIRONMENTAL		
231 Draft Environmental Document	231.01 Environmental assessment	X
	231.02 Circulated draft and cover letter	X
	231.03 Written notice of EIS preparation	X
	231.04 Published technical reports	X
	231.05 Floodplain evaluations	X
	231.06 Draft 4(f) document	X
	231.09 Approval to circulate	X
	231.10 Mailing list	X
232 Final Environmental Document	232.01 Distributed final and cover letter	X
	232.09 Approval to distribute	X
	232.19 Findings and notice of determination	X
	232.29 Record of decision or FONSI	X
	232.30 Mailing list	X
233 Public Notices of Availability	233.01 Public notices from newspapers	X
	233.02 Copy of Federal Register entry	X
234 Scenic Highway	234.01 Scenic highway study	X
	234.09 Approvals	X
240 PROJECT APPROVAL		
241 Project Work Plans	241.01 Copies of project work plans	
242 Draft Project Report	242.01 Drafts with intradistrict comments	
	242.02 Draft project report	X
243 Preferred Alternative	243.01 Preferred alternative selection	X
244 Project Report	244.01 Project report	X

PROJECT DEVELOPMENT UNIFORM FILE SYSTEM (245 - 262)		
CATEGORY	RECORD TYPE	PHF
245 Design Standard Exceptions	245.09 Documentation of exceptions from mandatory design standards	X
	245.10 Documentation of exceptions from advisory design standards	X
246 Route Adoption	246.09 CTC report, resolution, map	X
247 New Connections	247.09 CTC report and resolution	X
	247.10 FHWA approval	X
250 PUBLIC HEARING PROCESS		
251 Pre-Hearing Meetings	251.01 Initial meeting documentation	X
	251.02 Scoping meeting documentation	X
	251.03 Map showings, informational meetings, other pre-hearing documentation	X
252 Hearing Arrangements	252.01 Notices of hearing to Headquarters	
	252.02 Arrangements for hearing officer	
253 Public Hearing Notices	253.01 Public notices from newspapers	X
254 Record of Hearing	254.01 Transcript, comments, etc.	X
	254.02 Record of hearing	X
260 PROJECT AGREEMENTS		
261 Cooperative Agreements and Reports	261.01 Cooperative agreement report	X
	261.09 Draft agreements(s) and submittals to Headquarters	
	261.10 Approvals from Headquarters	X
	261.11 Executed agreements	X
262 Freeway Agreements	262.01 Draft and submittals to Headquarters	
	262.09 Approvals from Headquarters	X
	262.10 Executed agreements with map	X

PROJECT DEVELOPMENT UNIFORM FILE SYSTEM (263 - 274)		
CATEGORY	RECORD TYPE	PHF
263 Interagency Agreements	263.01 Drafts and submittals to Headquarters	
	263.09 Approvals from Headquarters	X
	263.10 Executed agreements	X
264 Highway Improvement Agreements	264.01 Drafts and submittals to Headquarters	
	264.09 Approvals from Headquarters	X
	264.10 Executed agreements	X
265 Maintenance Agreements	265.01 Drafts and submittals to Headquarters	
	265.09 Approvals from Headquarters	X
	265.10 Executed agreements	X
270 PERMITS		
271 State Agency Permits	271.01 Drafts	
	271.09 Approvals	X
	271.10 Executed permits	X
272 Federal Permits	272.01 Drafts	
	272.09 Approvals	X
	272.10 Executed permits	X
273 Local Agency Permits	273.01 Drafts	
	273.09 Approvals	X
	273.10 Executed permits	X
274 Encroachment Permits	274.01 Drafts and submittals to Headquarters	
	274.09 Approvals by Headquarters and FHWA	X
	274.10 Executed permits	X

PROJECT DEVELOPMENT UNIFORM FILE SYSTEM (300 - 341)		
CATEGORY	RECORD TYPE	PHF
300 EXTERNAL PROJECT DESIGN CORRESPONDENCE		
310 HEADQUARTERS AND DISTRICT CORRESPONDENCE		
311 Headquarters (except Division of Structures)	311.01 Memos between the district and various Headquarters units	
312 Districts	312.01 Memos between districts	
320 DIVISION OF STRUCTURES CORRESPONDENCE		
321 Structures	321.01 Memos to and from Structure Design	
	321.09 Approval memos from Headquarters	X
322 Structure Studies and Reports	322.01 Advanced planning studies	
	322.02 Bridge site submittal	
	322.03 Preliminary and foundation reports	X
	322.04 General plans	
	322.05 General details	
	322.06 Retaining wall site submittal and plans	
	322.07 Noise barrier site submittal and plans	
	322.08 Structural adequacy studies	X
	322.09 Special studies	
330 FEDERAL AGENCY CORRESPONDENCE		
331 Federal Agencies	331.01 Letters to and from various federal agencies	
	331.09 Letters affecting project decisions	X
340 STATE AGENCY CORRESPONDENCE		
341 State Agencies	341.01 Letters to and from various State agencies	
	341.09 Letters affecting project decisions	X

PROJECT DEVELOPMENT UNIFORM FILE SYSTEM (350 - 382)		
CATEGORY	RECORD TYPE	PHF
350 LOCAL AGENCY CORRESPONDENCE		
351 Cities	351.01 Letters to and from various cities	
	351.09 Letters affecting project decisions	X
352 Counties	352.01 Letters to and from various counties	
	352.09 Letters affecting project decisions	X
353 Area-Wide Agencies	353.01 Letters to and from various area-wide agencies (COG, etc.)	
	353.09 Letters affecting project decisions	X
354 Other Agencies or Special Districts	354.01 Letters to and from various agencies or districts (school districts, assessment districts, etc.)	
	354.09 Letters affecting project decisions	X
360 ELECTED-OFFICIAL CORRESPONDENCE		
361 Elected Officials	361.01 Letters to and from elected officials	
	361.09 Letters affecting project decisions	X
370 PUBLIC CORRESPONDENCE		
371 Individuals	371.01 Letters to and from individuals	
	371.09 Letters affecting project decisions	X
372 Private Groups	372.01 Letters to and from private groups	
	372.09 Letters affecting project decisions	X
380 MEMOS TO FILE (EXTERNAL)		
381 Phone Call Documentation	381.01 Phone call documentation	
	381.09 Phone call documentation affecting project decisions	X
382 Informal Meetings/Discussions	382.01 Notes of informal meetings	
	382.09 Notes affecting project decisions	X

PROJECT DEVELOPMENT UNIFORM FILE SYSTEM (383 - 386)		
CATEGORY	RECORD TYPE	PHF
383 Headquarters Reviews	383.01 Notes of reviews	
	383.09 Notes affecting project decisions	X
384 FHWA Reviews	384.01 Notes of reviews	
	384.09 Notes affecting project decisions	X
385 CHP Reviews	385.01 Notes of reviews	
	385.09 Notes affecting project decisions	X
386 Other Agency Reviews	386.01 Notes of reviews	
	386.09 Notes affecting project decisions	X

PROJECT DEVELOPMENT UNIFORM FILE SYSTEM (400 - 453)		
CATEGORY	RECORD TYPE	PHF
400 INTRADISTRICT PROJECT DESIGN CORRESPONDENCE		
410 DRAINAGE		
411 Drainage Correspondence	411.01 Memos to and from hydraulics unit	
	411.02 Preliminary drainage report	X
	411.03 Justification of alternatives	
	411.04 Final drainage review	
412 Drainage Studies	412.01 Design discharge calculations	X
	412.02 Floodplain encroachment	X
	412.03 Rock slope protection sizing	X
	412.04 Special Studies	X
420 ENVIRONMENTAL		
421 Environmental Correspondence	421.01 Memos to and from environmental unit	
430 LANDSCAPING		
431 Landscaping Correspondence	431.01 Memos to and from landscaping unit	
440 MATERIALS		
441 Materials Correspondence	441.01 Memos to and from materials unit	
	441.02 Materials reports	X
	441.03 Pavement deflection studies	X
	441.04 Special materials studies	X
450 OPERATIONAL		
451 Maintenance Correspondence	451.01 Memos to and from the maintenance unit	
452 Construction Correspondence	452.01 Memos to and from the construction unit	
453 Traffic Operations Correspondence	453.01 Memos to and from traffic operations unit	
	453.02 Final operational report	X

PROJECT DEVELOPMENT UNIFORM FILE SYSTEM (460 - 492)				
CATEGORY		RECORD TYPE		PHF
460	RIGHT-OF-WAY			
461	Right-of-Way Correspondence	461.01	Memos to and from right-of-way unit	
462	Utilities Correspondence	462.01	Memos to and from utilities unit (including letters to utility companies)	
463	Railroad/Utility Agreements	463.01	Agreements with utility companies, railroads, etc.	
464	Utility Relocation Plans	464.01	Relocation plans for gas, power, etc.	
465	Determination of Liability	465.01	Studies for utility/non-utility prior rights	X
466	Right-of-Way Contracts	466.01	Contracts, obligations, etc.	
467	Right-of-Way Maps	467.01	Parcel, ownership, excess land, etc.	
468	Cost Estimates	468.01	Fences, driveways, etc.	
469	Resolution of Necessity	469.01	Resolution of necessity data	X
470	SURVEYS			
471	Surveys Correspondence	471.01	Memos to and from surveys unit	
472	Survey Data	472.01	Aerial monuments, bench marks, etc.	
480	TRAFFIC			
481	Traffic Correspondence	481.01	Memos to and from traffic unit	
482	Traffic Forecasts	482.01	Present/design year ADT, peak hour, etc.	X
483	Warrants	483.01	Signal warrants, median barrier warrants, lighting warrants, etc.	X
490	MEMOS TO FILE (INTRA-DISTRICT)			
491	Phone Call Documentation	491.01	Phone call documentation	
		491.09	Phone call documentation affecting project decisions	X
492	Informal Meetings/Discussions	492.01	Notes of informal meetings	
		492.09	Notes affecting project decisions	X

PROJECT DEVELOPMENT UNIFORM FILE SYSTEM (500 - 524)		
CATEGORY	RECORD TYPE	PHF
500 CONTRACT PREPARATION		
510 PLANS		
511 Basic Plans	511.01 Contour mapping, skeletons, contour grading, interchanges, intersections, profiles, superelevations, etc.	
512 Drainage	512.01 Drainage plans, profiles, structure list, etc.	
513 Traffic	513.01 Signing, pavement delineation plan, electrical plans	
	513.09 Approval of pavement delineation plan	X
514 Traffic Handling	514.01 Staging and detour plans, traffic control, etc.	
515 Fencing	515.01 Types and locations, gates, etc.	
516 Erosion Control	516.01 Plans with erosion control details and locations	
517 Structures Plans	517.01 Final structure plans	
518 Landscape Plans	518.01 Landscape plans	
519 Special Details	519.01 Construction notes, pavement markers, survey monuments, etc.	
520 CALCULATIONS		
521 Quantities	521.01 Checked contract items calculations	
522 Earthwork Computations	522.01 EDP printouts or quantity sheets	
	522.02 Terrain lists	
	522.03 Template notes	
	522.04 Staking notes, superelevations, etc.	
523 Traverses	523.01 Computer printouts	
524 Profiles	524.01 EDP printouts or grade sheet	

PROJECT DEVELOPMENT UNIFORM FILE SYSTEM (530 - 538)		
CATEGORY	RECORD TYPE	PHF
530 PS&E PROCESSING		
531 PS&E Report	531.01 Report or transmittal to office engineer for district or Headquarters	X
	531.02 Liquidated damage calculations	
532 Preliminary Estimate of Cost	532.01 BEES printout, bid price justification, segregations, etc.	
	532.02 Final engineer's cost estimate	X
533 Special Provisions	533.01 Specifications	
534 Dummy	534.01 Proof special provisions, transmittal letters, etc.	
	534.02 Addenda	
535 Request for Funds	535.01 Request and justification	X
	535.02 FNM-76 approval	X
536 CTC Vote of Funds	536.01 Fund authorization by CTC	X
537 Resident Engineer Information	537.01 Copies of working data for resident engineer	

PROJECT DEVELOPMENT UNIFORM FILE SYSTEM (600 - 622)		
CATEGORY	RECORD TYPE	PHF
600 PROJECT MISCELLANEOUS		
610 SPECIAL STUDIES		
611 Bicycle	611.01 Completed studies and/or reports	X
612 Park and Ride	612.01 Completed studies and/or reports	X
613 Bus Loading Facilities	613.01 Completed studies and/or reports	X
614 Resource Conservation	614.01 Completed studies and/or reports	X
615 Value Analysis	615.01 Completed studies and/or reports	X
616 Hazardous Waste	616.01 Completed studies and/or reports	X
617 HOV Report	617.01 Completed studies and/or reports	X
620 PROJECT SAFETY		
621 Safety Analysis	621.01 Completed studies and/or reports	X
622 Design for Safety Recommendations	622.01 Recommendations, memos, etc.	X
	622.02 Decision documents, memos	X
623 Safety Reviews	623.01 Safety reviews and/or reports	X
630 PHOTOGRAPHS		
631 Project Photos	631.01 Preconstruction photos	X
632 Special Photos	632.01 Accidents, storm damage, etc.	X

Part 2

The Project Development Process

CHAPTER 8 – Overview of Project Development

Table of Contents

CHAPTER 8 – Overview of Project Development 8-5
SECTION 1 General 8-5
Reference Information 8-5
Project Development Process 8-5
Planning 8-5
Purpose and Need 8-6
Decision to Prepare Project Initiation Document 8-6
Project Initiation 8-7
Special Considerations 8-7
Programming Precedes Formal Project Studies 8-7
Project Delivery Scope, Cost, and Schedule 8-8
SECTION 2 Project Development Overview Using Project Milestones 8-9
Prior to Milestone 000 8-10
Milestone 000 to Milestone 020 8-11
Milestone 020 to Milestone 140 8-12
Milestone 140 to Milestone 160 8-13
Milestone 160 to Milestone 200 8-13
Milestone 200 to Milestone 260 8-14
Milestone 260 to Milestone 300 8-14
Milestone 300 to Milestone 380 8-15
Milestone 380 to Milestone 500 8-15
Milestone 500 to Milestone 700 8-16
SECTION 3 Charging Practices 8-17
General 8-17
Work Breakdown Structure 8-17
Other Accounting Codes 8-18
SECTION 4 Project Development Team 8-19
General 8-19
Interdisciplinary Approach 8-19
Project Development Team Functions 8-19
Project Development Team - Team Leader Selection 8-20
Project Development Team Meetings 8-21
Meeting Minutes 8-21
Project Development Team Formation 8-21

Full or Part-Time 8-22
Additional Project Development Team Members 8-22
Caltrans Advisory Committees 8-24
SECTION 5 Project Development Categories 8-27
General 8-27
Similar Projects Equal Similar Process 8-27
Category Descriptions 8-27
Category Assignments 8-30
Matrix to Project Planning Steps 8-31
SECTION 6 Project Alternatives 8-37
Need for Alternatives 8-37
Least Environmental Damage 8-37
Most Projects Have no Significant Impacts 8-37
Thorough Study of Alternatives 8-38
Environmental Review Requirements 8-38
Full Range of Alternatives 8-38
Constructability Reviews 8-38
Life-Cycle Cost Analysis 8-43
Formal Consideration of Alternatives 8-44
Defensible Alternative Selection Process 8-45
SECTION 7 Policies and Procedures that Span the Project Development Process 8-46
ARTICLE 1 Introduction 8-46
ARTICLE 2 Right-of-Way Considerations 8-46
Relocation Impact Studies 8-46
Airspace Lease Areas 8-47
Right-of-Way Cost Data 8-47
Railroad Involvement 8-47
Utility Involvement 8-48
ARTICLE 3 Disposal, Staging, and Borrow 8-48
ARTICLE 4 Responsibilities of Utility Companies and Other Owners 8-48
ARTICLE 5 Mobility Considerations 8-50
Complete Streets 8-50
High-Occupancy Vehicle (Bus and Carpool) Lanes 8-51
Park-and-Ride Facilities 8-52
Pedestrian Accessibility 8-53
Transit Related Facilities 8-54
Transportation Management Plans 8-54
Prolonged Ramp Closures 8-54
Accommodation of Oversize Loads 8-54
ARTICLE 6 Environmental Considerations 8-55
Public Access to Waterways 8-55
Floodplains 8-56
National Pollutant Discharge Elimination System 8-56
Use of Asphalt Concrete Grindings, Chunks, and Pieces 8-57
Consideration of Visual Impacts and Protection of Visual Quality 8-60

ARTICLE 7 Owner-Operator Considerations 8-62
Interim Projects 8-62
Widening Adjacent to Existing Facilities 8-64
Converting Shoulders to Traffic Lanes 8-65
Safety 8-66
Suicide Barrier 8-66
Project Size (Dollar Value) 8-67
Risk Management 8-68
Electronic File Sharing 8-68
ARTICLE 8 Federal Highway Administration Coordination 8-68
Stewardship and Delegation of
Federal Highway Administration Authority 8-68
Federal Highway Administration Oversight 8-68
Noteworthy Topics 8-70

Table of Figures

Figure 8-1 Project Development Categories Matrixed to
Key Project Planning Steps 8-32
Figure 8-2 Project Initiation and Approval Documents – According to Program[10] 8-34
Figure 8-3 Milestones Requiring a Constructability Review 8-40
Figure 8-4 Key Roles and Responsibilities for
Constructability Review Activities 8-43

CHAPTER 8 – Overview of Project Development

SECTION 1 General

Reference Information

Some of the references found in this chapter have hyperlinks that connect to Caltrans intranet pages which are not displayable to the general public. Until such time that the specific reference becomes available on the internet, the user will have to contact their district liaison, Caltrans project manager, or the appropriate Headquarters division to inquire about the availability of the reference.

Project Development Process

The project development process spans that period of time that begins with feasibility studies and ends with the completion of construction. The development process is tied to the legal requirements of environmental laws and regulations; it melds engineering requirements and Caltrans' management approval steps with the environmental process.

Planning

Considerable planning is completed prior to project development. This results in the development of a planning concept and scope identifying the type or mode of the facility as well as other features relating to the location and length of the project, including the number of lanes and general interchange and intersection spacing. See Chapter 1 – Introduction, for definitions of "planning concept" and "planning scope." This planning work focuses on identifying and clarifying the specific transportation system problem, and then looking for practical solutions. Project goals, objectives, and preliminary scoping are established so that preliminary feasibility studies can begin. A feasibility planning estimate may be prepared to validate the proposed project's objectives. For more information, see Chapter 20 – Project Development Cost Estimates, Section 2.

The determination of the appropriate transportation mode or modes should occur as part of the planning process for major urban improvements. This results from a corridor study and a major investment study (MIS).

Project development follows system and regional planning or follows the various management systems and master plans that identify the need for a particular project. The planning concept and scope are reviewed, and updated if appropriate, to define the design concept and scope, including basic design features. For definitions of "design concept" and "design scope," as well as "basic design features," see Chapter 9 – Project Initiation, Article 2.

Purpose and Need

A good statement of the proposed project's purpose-and-need should flow out of system planning. For more information on the system planning process, see Chapter 1 – Introduction, Section 4.

A project must satisfy a clearly defined purpose-and-need. It must meet State, regional, and local goals and objectives. For capacity-increasing projects, this includes air quality goals.

Alternative solutions are evaluated that avoid or reduce significant adverse environmental impacts. The alternative selected is the one that causes the least environmental damage while still serving the essential transportation need.

Decision to Prepare Project Initiation Document

Prior to committing district resources for the preparation of a project initiation document (PID), a district may prepare a one or two-page decision document discussing the feasibility of initiating a project. This decision document may be called a "project proposal report," a "project initiation proposal," etcetera.

The decision document usually includes a strip map and a feasibility planning estimate. It is an internal district document; each district determines its own requirements for initiating projects, subject to various required considerations including the regional agency's project study report (PSR) priority listing.

Project Initiation

The project development process is initiated by the designation of a project manager (PM). The project manager secures an expenditure authorization (EA) (see Section 3) and then begins preparing a project work plan (see the *Capital Project Workplan Handbook*). The initial project work plan will usually cover only the project initiation process in any detail; following approval of the PID, further development of the work plan will take place.

The project manager determines the composition of the project development team (PDT) by determining which internal functional disciplines and external representatives are required to plan and carry out the development of the project (see Section 4). At its first meeting, the PDT determines the tentative Project Development Category (see Section 5). The project manager uses the Project Development Category to prepare the project work plan.

Special Considerations

The following types of projects need concept studies and review prior to inclusion in the project delivery schedule or the programming document:

- State highway projects-funded-by-others, including locally funded, sales tax funded, or privately funded projects affecting State highways. For more information, see Chapter 2 – Roles and Responsibilities.
- Projects for new public road connections to freeways or expressways, requested by local agencies. See Chapter 27 – New Public Road Connections.

The various project initiation processes and documents are described in Chapter 9 – Project Initiation.

Programming Precedes Formal Project Studies

Before formal project studies can commence for State funded projects, the PID must be approved and the project must be programmed in a State programming document (see Chapter 4 – Programming) for projects-funded-by-others, an executed cooperative agreement or highway improvement agreement must exist (see Chapter 2 – Roles and Responsibilities, Section 5).

Exceptions

Formal project studies may begin earlier when an approved PID contains specific language granting exception to the normal procedures.

In addition, long-lead-time projects may commence prior to programming if they meet all seven steps outlined next. The California Transportation Commission (CTC) and Caltrans limit the number of such projects to an absolute minimum, consistent with availability of funds and project development staff available to Caltrans. CTC verifies that all of the following conditions are met.

1. Due to project complexity, estimated project development time exceeds seven years.
2. There are demonstrable practical reasons why certain phases of the project development work should be completed early.
3. Substantial cost savings will be realized as a result of early start on the project development work.
4. Work is limited to what is necessary to make the project eligible for inclusion in a subsequent programming document.
5. The work does not interfere with or delay work on projects included in an adopted programming document.
6. Funding for the work is provided in the budget.
7. A request to perform the project development work is submitted to the CTC, along with supporting documents.

Project Delivery Scope, Cost, and Schedule

Schedules for all major projects are listed in the Statewide Delivery Plan developed by the Headquarters Division of Project Management.

Project managers shall ensure that each project has a documented review and update of the project's scope, cost, and schedule, which is not more than one year old, included in the project's permanent project history file (PHF).

SECTION 2 Project Development Overview Using Project Milestones

This section provides an overview of the project development process with respect to the major project milestones illustrated in the following flowchart.

Each of the following chapters in Part 2 describes major events or phases in the project development process and is introduced by a brief explanation and flowchart illustrating where it fits in the sequence of project milestones.

The individual tasks required to complete a project as it proceeds through the project development process are described in the *Project Development Workflow Tasks Manual*. The *Project Development Workflow Tasks Manual* tasks are based on these same project milestones.

In addition to the *Project Development Procedures Manual (PDPM)* and *Project Development Workflow Tasks Manual*, other manuals are needed for reference throughout the project development process and are listed as a general reference.

The discussion in this section is a general guide through the project development process. This guide, for a specific project, needs to be modified depending on the specific circumstances of the project. To determine the details for completing a specific project, consult other chapters in this manual, the *Project Development Workflow Tasks Manual*, the other manuals referenced in Chapter 1 – Introduction, Section 2, and applicable district procedures.

Prior to Milestone 000

System and Regional Transportation Planning

The planning concept and scope for major transportation improvements are developed during the system planning process. The regional transportation plan (RTP) presents the proposed improvements for the region after completing required major investment studies, air quality conformity analysis, and a preliminary environmental evaluation. This is the first phase for screening project alternatives and it is documented in the California Environmental Quality Act (CEQA) environmental document (ED) that the regional transportation planning agency (RTPA) prepares for the regional transportation plan. Management systems, master plans, and prioritizing processes identify other project needs.

Chapter 1 – Introduction and Chapter 3 – Involvement of Caltrans Functional Units, describe system and regional transportation planning in further detail. In addition, the following Caltrans manuals and guidance should be referred to: *2010 California Regional Transportation Plan Guidelines*; and *Highway Capacity Manual*.

Milestone 000 to Milestone 020

Determine Project Alternatives and Approve Project Study Report

The project manager begins the project development process by preparing a project work plan for the proposed project and by coordinating the designation of a PDT. The project engineer (PE) obtains preliminary data for the project engineering work. Projects with potential for significant environmental impacts requiring formal consideration of alternatives usually are initiated by documentation in a PSR. However, other project initiation processes are available, depending upon the project type and specifics. Many of these optional processes provide project approval at this point—which allows the project to bypass subsequent milestones and proceed directly to Milestone 200 and the initiation of project design.

Prior to PSR approval (Milestone 010), sufficient information is needed to determine if project alternatives should be formally considered when the environmental document is prepared. If formal consideration is required, additional studies will be necessary to fully document the purpose-and-need and to identify the design concept and scope of the full range of possible project alternatives. A deliberate evaluation of the full range of project alternatives is required, to assure that alternate and multimode options are considered, that feasible avoidance alternatives are identified (if required), and that the costs of alternatives are evaluated. From these alternatives, the viable alternatives are studied in detail and are identified and documented in the PSR. One of the viable project alternatives is selected for programming the project's cost, design concept and scope, and schedule.

Following PSR approval and programming, and prior to initiating the environmental studies (Milestone 020), geometric plans, and right-of-way maps should be prepared in greater detail to identify the areas of potential effects.

Chapter 9 – Project Initiation, provides details on the project development policies and procedures relating to project alternatives, PSRs, and other PIDs. Other information on project development tasks required between Milestones 000 to 020 are located in the *Project Development Workflow Tasks Manual*. The following Caltrans documents should be referred to: *Standard Environmental Reference*; *Cooperative Agreement Manual*; *Encroachment Permits Manual*; *Caltrans Project Management Handbook*; *Highway Design Manual* (HDM); *Transportation Management Plan Guidelines*; and *User's Guide to Photogrammetric Products and Services*.

Milestone 020 to Milestone 140

Complete Detailed Environmental & Engineering Studies for Project Alternatives (as needed)

After reviewing the project alternatives, and prior to Milestone 040 (initiation of draft project report [DPR] and draft environmental document [DED]), impact mitigation measures are identified. Upon completion of the appropriate environmental studies and identification of potential significant adverse impacts, the need for additional alternatives should be determined.

When the environmental studies for the viable alternatives are complete, the DPR is finalized, approved (Milestone 100), and the draft environmental document is circulated to the public (Milestone 120). A preferred alternative is not recommended at the draft environmental document stage. However, if presented, the discussion of the preferred alternative should document factors considered in its selection.

The least environmentally damaging, practicable alternative (LEDPA) must be identified when a draft environmental impact report (DEIR) is prepared. If the No Build Alternative is identified as the least environmentally damaging, practicable alternative, the draft environmental impact report must identify a least environmentally damaging, practicable alternative from among the build alternatives.

Chapter 10 – Formal Project Studies, describes the project development policies and procedures relating to the completion of environmental and engineering studies for project alternatives. For the project development tasks required between Milestones 020 to 140, see the *Project Development Workflow Tasks Manual*. In addition, the following Caltrans manuals and guidance should be referred to: *Standard Environmental Reference*; *Caltrans Project Management Handbook*; *HDM*; and *Surveys Manual*.

Milestone 140 to Milestone 160

Conduct Public Hearing (as needed)

Following circulation of the draft environmental document (the public review period), a public hearing is held (Milestone 140). After analyzing the public hearing comments, a preferred alternative is normally selected, which allows the preparation and approval of the final environmental document (FED) (Milestone 160) which is attached to the project report (PR).

Chapter 11 – Public Hearing, describes the project development policies and procedures relating to a public hearing. For the project development tasks required between Milestones 140 to 160, see the *Project Development Workflow Tasks Manual*. In addition, the following Caltrans manuals and guidance should be referred to: *Standard Environmental Reference*; and *Caltrans Project Management Handbook*.

Milestone 160 to Milestone 200

Approve the Preferred Project Alternative

Selection of the preferred alternative authorizes the completion of the PR for project approval. When an environmental impact statement (EIS) has been prepared, an environmentally preferred alternative is identified in the record of decision (ROD) that is published in the Federal Register.

Chapter 12 – Project Approvals and Changes to Approved Projects, describes the project development policies and procedures for selecting and approving the preferred alternative and for project approvals. For the project development tasks required between Milestones 160 to 200, see the *Project Development Workflow Tasks Manual*. In addition, the following Caltrans manuals and guidance should be referred to: *Standard Environmental Reference* and *Caltrans Project Management Handbook*.

Milestone 200 to Milestone 260

Initiate Project Design

Once the preferred alternative has been chosen and the project has been approved, project design (preparation of plans, specifications, and estimate [PS&E]) can be initiated. Data from the materials report, survey information, preliminary drainage report, geometric base maps, and other sources are used by the project engineer for project design. Skeleton layouts and typical cross sections are developed (Milestone 260). Quantity calculations are started for contract items. Structure site submittals, utility plans for the utility companies, and right-of-way maps are sent to the appropriate individuals for use in preparing their design contributions to the project.

Chapter 14 – Preparation of Project Plans, describes the project development policies and procedures for initiating the design of a project. For the project development tasks required between Milestones 200 to 260, see the *Project Development Workflow Tasks Manual*. In addition, the following Caltrans manuals and guidance should be referred to: *HDM*; *CADD Users Manual*; *Plans Preparation Manual*; *Standard Plans*; *Standard Specifications*; *Ready to List and Construction Contract Award Guide (RTL Guide)*; *Caltrans Project Management Handbook*; and *Right of Way Manual*.

Milestone 260 to Milestone 300

Conduct Detailed Project Design

During this time frame, design details, plans, quantity calculations, and contract specifications for the project are developed by the involved functional units. The project engineer consolidates the work of functional units into a draft set of plans and specifications. Once all of the project data are consolidated, the project plans are circulated for review and comment in the district (Milestone 300).

Chapter 14 – Preparation of Project Plans, describes the project development policies and procedures relating to project design. For the project development tasks required between Milestones 260 to 300, see the *Project Development Workflow Tasks Manual*.

In addition, the following Caltrans manuals and guidance should be referred to: *HDM*; *CADD Users Manual*; *Plans Preparation Manual*; *California Manual on Uniform Traffic Control Devices* *(California MUTCD)*; *High-Occupancy Vehicle Guidelines*; *Ramp Meter Design Manual*; *Standard Plans*; *Standard Specifications*; *Ready to List and Construction Contract Award Guide (RTL Guide)*; and *Caltrans Project Management Handbook*.

Milestone 300 to Milestone 380

Complete Project Design

When all of the district comments are returned to the project engineer, the final design phase for the project begins. These comments are considered, a safety review is conducted, and the project PS&E are finalized. An environmental reevaluation should be conducted to confirm that the project design is within the framework of the project approval document, which includes the environmental document for the project. The project PS&E is then submitted to the district office engineer unit. After combining with the structure PS&E, it is sent to the Headquarters Division of Engineering Services-Office Engineer (Milestone 380).

Chapter 14 – Preparation of Project Plans, describes the project development policies and procedures for the completion of project design. For the project development tasks required between Milestones 300 to 380, see the *Project Development Workflow Tasks Manual*. In addition, the following Caltrans manuals and guidance should be referred to: *HDM*; *Standard Environmental Reference*; *CADD Users Manual*; *Plans Preparation Manual*; *Standard Plans*; *Standard Specifications*; *Ready to List and Construction Contract Award Guide (RTL Guide)*; and *Caltrans Project Management Handbook*.

Milestone 380 to Milestone 500

Prepare and Advertise Project Contract

Once the project reaches this stage, the design work should be complete. However, some additional details need to be completed prior to advertising the contract. Right-of-way certification and a CTC funds request approval must be obtained. The final project documents and bid package are then assembled to prepare the project for advertising. After the project has been advertised and the bids have been opened, the project engineer reviews the bidding process and recommends that the contract be approved (Milestone 500) and awarded, if appropriate.

Chapter 14 – Preparation of Project Plans and Chapter 15 – Final Project Development Procedures, describe the project development policies and procedures concerning the preparation, advertisement, and award of the project contract. For the project development tasks required between Milestones 380 to 500, see the *Project Development Workflow Tasks Manual*. In addition, the following Caltrans manuals and guidance should be referred to: *Ready to List and Construction Contract Award Guide (RTL Guide)*; *Construction Manual*; and *Caltrans Project Management Handbook*.

Milestone 500 to Milestone 700

Conduct and Complete Construction Project

Contract approval authorizes construction of the project. The project is constructed and the contract is administered according to the PS&E that was developed by the project engineer. However, if any design changes are required during the construction of the project, the project engineer will be consulted and usually requested to prepare the engineering details and calculations required to adequately construct the project changes. The resident engineer for the project prepares the final construction project records when the project is complete (Milestone 600). The final contract estimate, project history file, and the as-built plans for the project are completed before the project is complete (Milestone 700).

Chapter 15 – Final Project Development Procedures describes the project development policies and procedures for project construction. For the project development tasks required between Milestones 500 to 700, see the *Project Development Workflow Tasks Manual*. In addition, the following Caltrans manuals and guidance should be referred to: *Construction Manual* and *Caltrans Project Management Handbook*.

SECTION 3 Charging Practices

General

Successful project management requires effective and precise exchange of information between all the personnel involved throughout all phases of a project. It is essential that individuals performing project work all charge their time in a consistent manner. This consistency is aided by the use of standards which provide a precisely defined structure used by all involved personnel to plan the project, exchange information, and organize reporting. Caltrans has developed project management standards in the form of a structure that breaks down the capital outlay support process by deliverables and tasks needed to complete them.

The data generated by the use of these standards provides information that is consistent statewide and is needed to:

- Improve charging practices.
- Develop project work plans.
- Accurately report and forecast results.
- Develop standardized reports providing meaningful comparisons.
- Monitor performance in meeting commitments.
- Provide the basis for continuous improvement.

Detailed information on charging practices are located in the *Capital Outlay Support (COS) Charging Practice Guidelines*.

Work Breakdown Structure

Personnel support charges made to projects are to include all project-oriented activities from initiation of studies through close out of the construction project. These activities are known collectively as the work breakdown structure (WBS). The work breakdown structure is simply a formal and systematic way of defining and identifying the component parts of a project and the work needed to complete them. It is a product-oriented structure that organizes and defines the total Caltrans capital outlay project work. See the *Workplan Standards Guide, Release 11.1* for a detailed description of the work breakdown structure and its use. A detailed listing of the activities is also included in the *Coding Manual*, Chapter 6. Many of the work breakdown structure activities used in project development work also correspond to the individual tasks described in the *Project Development Workflow Tasks Manual*.

Other Accounting Codes

Other accounting codes used for project development activities, include sub-job number, special designation, management system activity code, and object code. For further information, refer to the *Coding Manual*.

SECTION 4 Project Development Team

General

The project development team (PDT) is directly involved with the implementation of a transportation project. The original PDT concept was developed in response to the *National Environmental Policy Act of 1969* (NEPA) which requires public agencies to "utilize a systematic, interdisciplinary approach which will ensure the integrated use of the natural and social sciences and the environmental design arts in planning and in decision making which may have an impact on man's environment."

Interdisciplinary Approach

The interdisciplinary approach uses interaction of different disciplines in the planning, developing, and evaluating alternatives. Caltrans uses a formal PDT meeting approach for projects in Project Development Categories 1, 2A, 3 and 4A. An informal approach without requiring attendance at meetings is usually used for Categories 2B, 4B and 5. See Section 5 for the definitions of Project Development Categories.

The PDT advises and assists the project manager in directing the course of studies, makes recommendations to the project manager and district management, and works to carry out the project work plan. Members of the PDT participate in major meetings, public hearings, and community involvement. The PDT also serves as the nucleus for a value analysis team (see Chapter 19 – Value Analysis). The PDT is responsible for the conduct of studies and the accumulation of data throughout project development.

Project Development Team Functions

The primary functions of the PDT are listed as follows:

- To assess, at the outset, available preliminary engineering data to confirm that the study should continue. The project manager requests the transportation planning unit to validate previous systems planning recommendations for transportation improvements. The PDT participates in this reevaluation.
- To determine logical project limits.
- To determine the need for local, regional, State, or federal agency members on the PDT, or the need for citizen advisory committees.

- To initiate environmental and material investigations for projects that require significant disposal, staging or borrow.
- To recommend studies, timetables, alternatives, type of environmental documentation, and the feasibility of project impact mitigation measures.
- To ensure thorough analysis of the social, economic, environmental (including visual and aesthetic) and engineering aspects of the project. The PDT calls upon representatives of various disciplines as needed.
- To initiate a program of community involvement to encourage citizen and local agency participation throughout the study, including public meetings and the public hearing. See Chapter 22 – Community Involvement.
- To ensure that State and federal requirements for project development studies have been met.
- To use information in reports (PSR, DPR, draft environmental document, etcetera) together with input from the public hearing when recommending a preferred alternative to district management for project approval.
- To ensure design of a quality project that can be safely and efficiently constructed and maintained within scope and budget and on schedule.
- To ensure that right-of-way is acquired and cleared on schedule.
- To provide advice during project construction on construction activities, contract changes and mitigation and right-of-way commitments.
- To ensure that project history is preserved by documenting project decisions and utilizing the uniform file system. See Chapter 7 – Uniform File System.

Project Development Team - Team Leader Selection

The PDT team leader is typically designated by the Deputy District Director for program/project management. If the team leader is to be from another functional unit, the appropriate functional Deputy District Director will designate the team leader. The person selected to be the team leader will also be the project manager. Project assignments are based on project complexity and the ability, skill level, background, experience, past performance and existing workload of the project manager.

The person selected to be the team leader (the project manager) can be from any of the functional areas. Selection is based on the professional skills required to perform the planning and alternatives analysis that is specific to the assignments for that PDT. The team leader should have an overall understanding of the project development process, be able to manage a team, and be able to work effectively with communities, groups, and the staff of local agencies.

Formation of the PDT, selection of the team leader (the project manager), and all subsequent modifications to the team must be documented in the project file. See Chapter 7 – Uniform File System.

Project Development Team Meetings

PDT meetings should be held as necessary. Regularly scheduled meetings assist in maintaining group dynamics and communication. More meetings are probably necessary during initial studies, with need decreasing during the technical studies, and increasing again during completion and analysis of results prior to making specific recommendations for the draft environmental document. PDT members should attend meetings when their involvement is necessary.

Meeting Minutes

Minutes of team meetings are prepared and placed in the project file to document decisions. The detail of minutes varies according to the purpose of the meeting.

Project Development Team Formation

Before starting project studies, the core of the PDT is formed for all projects, regardless of size or type of funding. The core PDT guides preliminary studies until the project is defined, which then determines the Project Development Category and the project development process requirements. At a minimum, a PDT is composed of the project manager, a representative of the regional transportation planning agency (if involved), and representatives from district design, environmental, traffic, safety, surveys, construction, and maintenance units, and the right-of-way unit. The program manager and/or program advisor should also be considered.

Note: This manual uses the term “design unit” to refer to the district functional unit primarily responsible for the development of engineering design features of the project. This includes those units responsible for monitoring or reviewing State highway project engineering design features that are developed by outside entities or that are directly contracted out.

The PDT should make the most efficient use of member’s time. For instance, a PDT may be formed to handle all safety and operational improvement projects. This PDT should be able to act through individual review of reports, by team leader (project manager) telephone contact, or by having one meeting to cover several projects at one time.

Representatives from safety, construction, surveys, traffic, and maintenance are included for all projects to ensure that appropriate consideration is given to design features that limit exposure of employees, contractor personnel, and the traveling public to traffic during construction, maintenance, and all other normal operations.

Full or Part-Time

Team members may be full-time or part-time, depending on the magnitude of the impacts or the fields in which they specialize.

Additional Project Development Team Members

The selection of additional team members depends on the scope and complexity of the proposed project. The interdisciplinary skills of the district, Headquarters, the Federal Highway Administration (FHWA), and local and regional agencies are requested as needed to ensure that engineering, social, economic, and environmental aspects are adequately assessed, and reasonable evaluations and decisions are made.

On locally funded projects, representatives from the project sponsor should be included on the PDT, as appropriate. The Caltrans project manager should be provided a list of names from the project sponsor indicating the external participants they would like as PDT members (typically their project manager and functional specialists or consultants). The Caltrans project manager will then determine the appropriate composition of internal functional disciplines to complete the PDT.

The California Highway Patrol (CHP) division commander should be requested to assign a representative whenever the project could have an impact on CHP enforcement of public safety. Example projects include: striping right or left shoulders as auxiliary lanes, narrowing shoulders, or lanes, striping any section of freeway or expressway for high-occupancy vehicle (HOV) operation, noise barriers adjacent to shoulders, ramp meters, weigh stations, or paving a truck brake check area at the summit of a grade.

If significant utility investigation and relocation are involved, a representative of the right-of-way utilities unit may be used on the PDT.

For a project with extensive structure involvement, a representative of the Headquarters Office of Structure Design should be on the PDT to assist in development and analysis of alternatives.

To ensure that aesthetics, visual impacts, conservation and management of roadside vegetation, and site planning are appropriately addressed, the district landscape architect (LA) or project landscape architect should be a member of the PDT for all projects which involve or affect planting, access and safe working conditions for vegetation management, roadside rest areas, noise barriers, and scenic highways; also the opportunity to participate on all other types of projects should be offered.

For projects with noise barriers or unique structures, a bridge architect should be considered for membership on the PDT to assist in development of architectural treatments. Assistance in the selection should be requested from the Headquarters Office of Structure Design.

Include the district bicycle, pedestrian and transit coordinators on the PDT whenever users of these modes of transportation are present or if there are multimodal needs to address.

In addition, existing advisory groups established by local agencies should be consulted to ensure due consideration of aesthetic issues. Examples of such groups include: architectural review boards, design review committees, community advisory boards, and etcetera. Where such groups do not exist, consult the local agency as to the appropriate method for obtaining citizen participation on aesthetic issues.

The district community involvement coordinator or public information officer should be invited to participate on the PDT, as appropriate, to assist in developing an appropriate public participation and citizen involvement program. See Chapter 22 – Community Involvement.

Additional members may be selected from, but are not limited to, the following:

- Public members: may represent a particular expertise, geographic area, or affected group, etcetera.
- Local and Regional Agencies: When a proposed Caltrans project affects local and regional agencies, members of their staff should be included on the PDT.
- FHWA: The FHWA should be considered for team membership on non-exempt major Federal-aid projects or projects that need coordination between federal agencies.
- Legal: Any legal problem, existing or anticipated, requires a representative from the Headquarters Legal Division. Requests should be directed to the appropriate legal office.

- Ride Sharing: For major projects, the PDT consults with the district ride sharing coordinator and may include the coordinator on the team.
- Consultants: When consultants have been retained by Caltrans to provide specialized technical skills unavailable within Caltrans, they should participate on the PDT as necessary.

Representatives from district real property asset management are normally not members of the PDT, but should be invited to the PDT meetings. The district asset manager will attend team meetings on those projects with potential for multiple use or special uses of right-of-way.

The Headquarters Project Delivery Coordinator and the environmental coordinator (from the Headquarters Division of Environmental Analysis), while usually not official members of the PDT, should be called upon as needed to provide liaison between the district and Caltrans' Headquarters units and FHWA.

Caltrans Advisory Committees

On projects that may potentially have environmental impacts, advisory committees may be used to obtain semi-formal, specialized community interaction. They serve as adjunct committees to the PDT. Committee types and typical roles are described as follows:

- A committee of elected or appointed officials provides overall policy guidance and direction.
- A committee of professional staff members of State, regional, or local agencies provide advice on technical aspects of studies being proposed or conducted.
- A committee of citizens provides representative views of special interests or community concerns.

Example of a Caltrans Advisory Committee

An example of an advisory committee might be an aesthetic advisory committee composed of representatives from the local community's architectural review board, design review committee, other interested advisory boards, etcetera and individual citizens.

Appointment of Caltrans Advisory Committee Members

When a timely study is needed, and when project funding appears to be available, advisory committees may be appointed by the local government. Such a committee is responsible to the appointing local government. The local government should be encouraged to appoint members that represent a broad spectrum of community interest, including those of the physically challenged and minorities. The local government should also devote adequate staff time to the committee. A subcommittee can be appointed for specific phases, such as traffic studies, analysis of project alternatives, etcetera.

Functions of a Caltrans Advisory Committee

Advisory committees, if used properly, can help to identify problems and clarify key issues. They are not and should not be considered decision-making bodies. They can be used to:

- Test public acceptance of the project
- Check the appropriateness of problem solutions
- Build a constituency for the project
- Reduce conflict between opposing interests

Any PDT contemplating use of an advisory committee should develop a written charter for the committee. The charter should indicate that the advisory committee's role is to provide advice to the PDT. The PDT should always consider this advice. Ignoring the advice risks creating a hostile relationship between the PDT and the advisory committee.

Advisory committees may attempt to assume a role beyond their role described in the charter. If this happens, it may be necessary to have the committee review its charter and refocus on its role and purpose. See Chapter 22 – Community Involvement for more information on Caltrans' citizen advisory committees.

Need to Develop Working Relationship

When using an advisory committee, a close working relationship should be developed with the chair and members individually. Controversies and differences should be informally resolved (one-on-one) so that the advisory committee operates as smoothly as possible. An action contrary to the advice given by the committee may reflect badly on the project or compromise Caltrans' future relationship with the whole community.

Proper Use of Caltrans Advisory Committees

Advisory committees should be used properly. For instance, an advisory committee should not be used to inform the public of project activities and plans. A more practical method to inform the public of project activities, plans, and schedules is to use a project newsletter or a strong media program. See Chapter 22 – Community Involvement for more details on providing the public project information.

SECTION 5 Project Development Categories

General

It is recognized that all projects are not of the same magnitude, nor will they have similar effects due to differing geographic location, population densities, and other unique characteristics. The project development process must provide a methodology to address these economic, social, environmental, and transportation differences. It must also address applicable federal and State legal requirements.

Similar Projects Equal Similar Process

Project Development Categories have been established to assure that project-related differences and State and federal requirements are addressed in the project development process. Each category consists of groups of projects having similar characteristics and therefore similar development procedures. The following characteristics were selected for categorizing highway projects:

1. Whether or not there is access control
2. Whether or not the project is on new alignment
3. Whether or not substantial new right-of-way is required
4. Whether or not there is substantial increase in traffic capacity
5. Whether or not the project is initiated by, and is under the jurisdiction of, a local agency

Category Descriptions

By definition, Categories 1 through 4 apply only to State highways; Categories 5 and 6 apply to either State or local highways; Category 7 is limited to local highways.

Category 1 Projects

Projects requiring access control, new right-of-way, adoption of a route location by the CTC, and freeway agreements.

Examples: New freeways, expressways, and controlled access highways on new alignment—conversion of conventional highways (with no access control) to freeways—expressways or controlled access highways.

Category 2 Projects

Projects that require a route location adoption by the CTC, and new right-of-way, but do not require access control or freeway agreements.

Examples: New conventional highways or realignments of conventional highways.

For purposes of determining whether or not an initial PDT meeting will be scheduled, Category 2 projects will be informally classified as "2A" or "2B." The proper classification will be determined by the PDT. Guidelines for these classifications are not specific, but would generally be described as follows:

2A Projects:

A major project which would normally be one of substantial realignment or providing a substantial increase in traffic capacity. Also, the project would be one of particular significance physically or environmentally, or may be located in an area of critical concern.

2B Projects:

A minor project which would not meet any of the requirements for a major project. Examples include minor safety curve corrections, temporary connections, and other small realignments requiring a route adoption.

Category 3 Projects

Projects on previously constructed access controlled routes requiring a new or revised freeway agreement, but not a route adoption. New right-of-way may or may not be required. This category does not apply to the subsequent stages of multistage projects. A Category 3 project may be categorically exempt.

Examples: New or modified interchanges—new connections—conversion of expressway to freeway—widening an existing expressway, freeway, or controlled access highway, if they involve changes to local roads.

Category 4 Projects

Projects that do not require a location adoption or a freeway agreement and do not meet the criteria of Categories 5 or 6.

Because a wide variety of projects will be classified as Category 4, a further classification is made into 4A projects and 4B projects. The purpose of this distinction is to make an early tentative identification of projects whose potential impacts are most likely to be of interest or concern to regional and local jurisdictions.

4A Projects:

Projects requiring substantial new right-of-way or substantially increasing traffic capacity.

Examples: Widening conventional highway—addition of freeway lanes—interchange reconstruction not requiring a revised freeway agreement—separate safety roadside rest areas

4B Projects:

Projects that do not require substantial new right-of-way and do not substantially increase traffic capacity.

Examples: Projects that could probably be Category 5 projects except for the fact that they require a negative declaration rather than being categorically exempt under CEQA.

Category 5 Projects

Projects of minimal economic, social, or environmental significance. These projects would include those categorically exempt under CEQA. The *Standard Environmental Reference* contains a complete listing of categorical exemptions, along with guidelines for their applicability to a project.

Category 6 Projects

Projects urgently needed because of a national emergency, natural disaster, catastrophic failure, or immediate threat to life or property. Caution should be exercised for projects lasting over 30 days that have potential Section 106 (National Historic Preservation Act) involvement.

Even though there are no specified procedures for State administered emergency restorative work, projects should involve interested local agencies when practicable. For major permanent replacement work involving studies of alternative locations, development of plans, right-of-way acquisition, betterments, etcetera, the procedures of the appropriate Project Development Category will apply, unless otherwise approved by the FHWA.

For additional guidance on environmental approval for emergency projects see the Division of Environmental Analysis *Emergency Projects Environmental Process and Requirements* guidance.

Category 7 Projects

Federal-aid projects initiated by local agencies on highways under their jurisdiction, not classified as Category 5 or 6.

Category Assignments

The assignment of a particular Project Development Category is usually a PDT function, but the responsibility rests with the District Director, or in the case of locally initiated projects, with the local agency.

As further data is gathered, the category assignment is subject to change. Input into the determination will be provided by both the design and environmental units.

As soon as the category assignment is made, a comment should be entered in the next status of projects in the “remarks” column.

It is possible that different project alternatives will call for different categories; for example, a new alignment alternative would be Category 1 or 2, whereas a “fix-the existing” alternative for the same study might be Category 4A or 4B. In these cases, the highest-order category will be selected to assure that recycling of the process will not be required later should the higher-order project be selected. The category assignment is always subject to change as project alternatives are added or dropped. However, dropping down in order should only be done after very careful consideration.

Matrix to Project Planning Steps

The relationship between the Project Development Category and the key steps in the project planning portion of the project development process are shown on Figure 8-1. This Figure summarizes the requirements for each Caltrans Project Development Category as stated in other chapters, and relates them to the various program types. In addition, Figure 8-2 relates the various program codes to the different types of project initiation and project approval documents.

ATTENTION! The information presented in the following figures for program components and program codes is not current. For current information, please see the detailed listing of program codes in the *Coding Manual*.

Figure 8-1 Project Development Categories Matrixed to Key Project Planning Steps

KEY PROJECT PLANNING STEPS	PROJECT DEVELOPMENT CATEGORY[7]							
	1	2		3	4		5	6
		A	B		A	B		
Designate project manager (Chapter 8 Section 1)	Yes	Yes	Yes	Yes	Yes	Yes	Yes	Yes
Develop project work plan (Chapter 8 Section 1)	Yes	Yes	Yes	Yes	Yes	Yes	Yes	Yes
Project development team (Chapter 8 Section 1)	Formal	Formal	Formal	Formal	Formal	Informal[1]	Informal[1]	No
Preliminary environmental evaluation (Chapter 10 Section 2)	Yes	Yes	Yes	Yes	Yes	Yes	Yes	Yes
Project initiation document (Chapter 9)	PSR	PSR	PSR	PSR	PSR	PSR	PSR[5]	PSR[5]
Initial public meeting (Chapter 10 Section 3 and Chapter 22 Article 5)	Yes	Yes	Optional	Optional	Optional	Only if requested	No	No
Written notice of studies (Chapter 10 Section 3 and Chapter 22 Section 10)	Yes	Yes	Yes	Yes	Yes	Rarely[3]	No	No
Initiate formal environmental studies (Chapter 10 Section 3)	Yes	Yes	Normally[2]	Normally[2]	Yes	Yes	No	No
Draft project report (Chapter 10 Section 5)	Yes	Yes	Normally[2]	Normally[2]	Yes	Yes	No	No
Environmental document	Yes	Yes	Normally[2]	Normally[2]	Yes	Yes	No	No
Public hearing (Chapter 11)	Yes or opportunity	Yes or opportunity	Yes[2] or opportunity	Normally[2,4]	Yes or opportunity	Rarely[4]	No	No
Preferred alternative selection (Chapter 12 Section 2)	Yes	Yes	Normally[3]	Normally[3]	Normally[3]	Normally[3]	No	No
Project approval document (Chapter 12)	PR	PR	PR	PR	PR	PR	PR[6]	PR[6]
CTC route adoption (Chapters 13 and 23)	Yes	Yes	Yes	No	No	No	No	No
Freeway agreement (Chapters 13 and 24)	Yes	No	No	Yes	No	No	No	No

(Chapter Section) = *Project Development Procedures Manual*

See footnotes on next page.

Footnotes:

1 Formal PDT not required. The determination of significance of environmental impacts and of the Project Development Category will be jointly made by district project management, design, and environmental units.
2 Not applicable if categorically or statutorily exempt, and/or categorically excluded.
3 Required for projects that present alternatives in an environmental document (environmental impact report/environmental impact statement or initial study/environmental assessment).
4 If no federal environmental document is involved, the PDT evaluates and determines the need for a public hearing.
5 The following project initiation documents are applicable, depending on project type or program:

Program	Type of Project	Document
various	Project-funded-by-others, non-complex, > $1M	PSR-PR, PEER
HA1	Lands, buildings, & facilities improvement	Facility PSR
HA4S	Seismic retrofit	PSSR-Seismic
HA21 / HA22	Bridge/roadway R&R	PSSR
HA23	Major damage restoration	DAF
HA25 / HB32	Highway planting or restoration	PSR Data Sheet
HA28	Urban freeway off-pavement access	PSSR-UFOPA
HB4N	Operational improvements (TSM projects)	PIR
HB5	HOV operational improvements (TSM projects)	PIR
HB6	Rideshare facilities (TSM projects)	PIR
HB311	Community noise abatement	NBSSR

Note: Minor A, Minor B, Capital Preventive Maintenance, and other maintenance projects do not require a project initiation document; therefore, a PR initiates a Minor A, a CAPM-PR initiates Capital Preventive Maintenance projects, and an EA-PR initiates the Minor B and other non-CAPM maintenance projects.

6 The following project approval documents are applicable, depending on project type or program:

Program	Type of Project	Document
– – – – – – –	Encroachment permit < $1M	PEER
various	Projects-funded-by-others, non-complex, < $3 M	PEER
various	Minor B or maintenance projects	EA-PR
HA22	Capital preventive maintenance projects	CAPM-PR
HA25 / HB32	Highway planting or restoration	PR-HP&R
HA26 / HB33	Safety roadside rest or restoration	PR-SRR

These project initiation documents are equivalent to a PR if they have the following approved attachments:

Document	Attachments
NBSSR	CE (or ND if necessary) and noise study
PSR-PR	Approved ED
PSSR	CE (or ND if necessary)
PSSR-Seismic	CE
PSSR-UFOPA	CE
DAF	CE

7 Category 7 relates to local projects on local facilities only. See the *Local Assistance Procedures Manual*.

Figure 8-2 Project Initiation and Approval Documents – According to Program[10]

CMP = State budget program component

PRG = State budget program task (old program)

Report Types

CAPM-PR	Capital preventive maintenance - project report
PSR-PR	Project study report - project report
DAF	Damage assessment form
DO	Director's order
DPR	Draft project report
EA-PR	Expenditure authorization - project report
Facility PSR	Facility project study report
NBSSR	Noise barrier scope summary report
PEER	Permit engineering evaluation report
PIR	Project information report
PR	Project report
PR-HP&R	Project report - highway planting restoration
PR-SRRA	Project report - safety roadside rest area
PSR	Project study report
PSRDS-HP	Project study report data sheet - highway planting
PSRDS-HPR	Project study report data sheet - highway planting restoration
PSSR-BR	Project scope summary report - structure rehabilitation
PSSR-PR	Project scope summary report - pavement rehabilitation
PSSR-SR	Project scope summary report - seismic retrofit
PSSR-UFOPA	Project scope summary report - urban freeway off-pavement access

Key Project Planning Steps	PROJECT DEVELOPMENT CATEGORY								
	1	2		3	4		5	6	7
		A	B		A	B			
Access control freeway agreement	YES	NO	NO	YES	NO	NO	NO		
On new alignment route adoption	YES	YES	YES	NO	NO	NO	NO		
Substantial new	YES	YES	NO	M	YES	NO	NO		
Right-of-way needed		YES	NO	YES	YES	NO	NO		
Substantial increase in traffic capacity									YES
Initiated by or under local jurisdiction		YES	NO		M	YES	NO		
Environmental significance								YES	
Emergency									

M = maybe (yes or no)

Projects Authorized in State Programming Documents

State Highway Operation and Protection Program (SHOPP)				
CMP	**PRG**	**DESCRIPTION**	**INITIATION**	**APPROVAL**
RAS	HA11	Equipment facilities	Facility PSR	PR[4]
	HA12	Maintenance facilities	Facility PSR	PR[4]
	HA13	Buildings and operation centers	Facility PSR	PR[4]
	HA21	Bridge restoration and replacement	PSSR-BR	PSSR-BR[1]
	HA22	Roadway reconstruction and restoration	PSSR-PR	PSSR-BR[1]
	HA22	Capital preventive maintenance projects	CAPM-PR	CAPM-PR
	HA23	Major damage restoration	DAF	DAF[1]
	HA25	Highway planting restoration	PSRDS-HPR	PR-HP&R
	HA26	Safety roadside rest area restoration	PSR	PR-SRRA
	HA27	Urban freeway median barrier retrofit	PSR	PR
	HA28	Urban freeway off pavement access	PSSR-UFOPA	PSSR-UFOPA
	HB42	Protective betterments	PSR[3]	PR[3,4]
	HA4S1	Phase 1 structures seismic retrofit	PSSR-SR	PSSR-SR
	HA4S2	Phase 2 structures seismic retrofit	PSSR-SR	PSSR-SR
	HB1	Safety improvements	PSR[3]	PR[3,4]
OHC	HB32	Highway planting	PSRDS-HP	PR-HP&R
	HB33	Safety roadside rest areas	PSR	PR-SRRA
	HB34	Roadside enhancement (vista points)	PSR[3]	PR[3,4]
	HB4N	Operational improvements (non-capacity increasing)	PSR[3]	PR[3,4]
	HB711	New curb ramp (ADA)	PSR	PR
	HB712	Park-and-ride lot (ADA) modifications	PSR	PR

State Transportation Improvement Program (STIP)				
CMP	**PRG**	**DESCRIPTION**	**INITIATION**	**APPROVAL**
FCR	HB4N	Operational improvements (non-capacity increasing)	PSR[3]	PR[3]
	HB4C	Operational improvements (capacity increasing)	PSR[3]	PR[3,4]
	HB5	HOV facilities	PSR[3]	PR[3]
	HB6	Transit-related and ridesharing facilities	PSR[3]	PR[3]
IRS	HB4N	Operational improvements (non-capacity increasing)	PSR[3]	PR[3]
	HB4C	Operational improvements (capacity increasing)	PSR	PR[4]
	HE11	New facilities - new connections and cross-traffic improvements	PSR[3]	PR[3,4]
	HE12	New Facilities - upgraded facilities	PSR[3]	PR[3,4]
	HE13	New Facilities - lane additions	PSR	PR[4]
	HE14	New Facilities - new highways	PSR	PR[4]
SW	HB311	Community noise attenuation	NBSSR	NBSSR[1,2]

Traffic Systems Management Plan (TSM Plan)				
CMP	**PRG**	**DESCRIPTION**	**INITIATION**	**APPROVAL**
TSM	HB4N	Operational improvements (non-capacity increasing)	PIR	PR
	HB5	HOV facilities	PIR	PR
	HB6	Transit-related and ridesharing facilities	PIR	PR

Toll Bridge Program				
CMP	**PRG**	**DESCRIPTION**	**INITIATION**	**APPROVAL**
TBF	HA14	Toll facilities	Facility PSR	PR[4]
	HA21	Bridge restoration and replacement	PSSR-BR	PSSR-BR
	HA4S3	Toll bridge seismic retrofit	PSSR-SR	PSSR-SR
	HB4N	Operational improvements (non-capacity increasing)	PSR[3]	PR[3]
	HE11	New Facilities - new connections and cross-traffic improvements	PSR[3]	PR[3,4]
	HE14	New Facilities - new highways	PSR	PR[4]
	HE201 to HE209	New toll bridge facilities	PSR	PR[4]

Projects Not Authorized in State Programming Documents

Other Caltrans-Funded Projects			
PROGRAM	**DESCRIPTION**	**INITIATION**	**APPROVAL**
HM1 to HM5	Maintenance	EA-PR	EA-PR
All programs	Minor B	EA-PR	EA-PR[11]
All programs	Minor A	PR	PR
All programs	Emergency or urgent	DO/DAF[12]	DO/DAF[1]

100% Locally Funded Projects[8]		
DESCRIPTION	**INITIATION**	**APPROVAL**
Projects-funded-by-others[6] that do not meet criteria	PSR[3,9]	PR[3,4]
Projects-funded-by-others[6] that meet criteria	PSR-PR	PSR-PR
Projects-funded-by-others[6] that meet PEER criteria	PEER[5,9]	PEER[5]
Encroachment permit projects[7] ($300K or less)	PEER[9]	PEER
Encroachment permit projects[7] ($300K to $1M)	PEER[5,9]	PEER[5]

Footnotes:

1 Must have categorical exemption or final environmental document attached.
2 Noise study must be completed and approved.
3 Combined PSR-PR could be used if criteria are met.
4 DPR needed if draft environmental document is prepared by Caltrans.
5 PEER can be used unless district decides PEER provides inadequate justification and documentation and that a PR is needed. The PSR-PR format may be used for PR if criteria are met.
6 100 % locally funded projects costing over $1 million within State right-of-way.
7 100 % locally funded projects costing $1 million or less within State right-of-way.
8 Jointly funded projects are projects authorized in State programming documents and are processed in the same manner.
9 New public road connections: Use the PSR for both expressways and freeways.
10 PSR is standard project initiation document. PR is standard project approval document. If the specialized document does not provide adequate coverage, use the standard document.
11 Traffic-signal projects require cover letter with technical justification, attachments, RE stamp.
12 Emergency projects outside of HA23 program which will receive a director's order may follow the HA23 procedure.

SECTION 6 Project Alternatives

Need for Alternatives

During the development of all projects, alternatives are considered to the extent necessary to (1) minimize costs and adverse environmental impacts, and to (2) maximize public benefits. In addition, a minimum fundable alternative and stageable alternatives need to be identified (see Chapter 7 – Uniform File System).

Generally, the concept and scope of project alternatives can include location, geometric features, mode, or mix of modes. However, mode or mix of modes should have been determined at an earlier stage, during the system planning process, and only review and documentation of that determination is needed during formal project studies. In addition, some location and geometric variations are not alternatives; instead, they are design variations.

Discussing project alternatives with community groups is an effective way to gain an improved understanding of the goals and objectives of various community interests. It can assist in determining which alternatives have the greatest potential for successful implementation.

Value analysis is the preferred method of developing alternatives, using a systematic application of analytical techniques to identify a project's function, identify alternatives, and analyze alternatives to identify the one that fully meets the project's function at the lowest overall cost.

Least Environmental Damage

It is Caltrans' policy to evaluate alternative solutions that reduce or avoid adverse environmental impacts, and to select the alternative that causes the least environmental damage while still accomplishing the transportation need.

Most Projects Have no Significant Impacts

Most projects do not have potential significant environmental impacts, thus no formal consideration of alternatives is needed. This would generally include traffic system management and rehabilitation projects, and other projects with minor impacts and little controversy. For these cases, project alternatives are considered on an informal basis; and are not required to be addressed in the project's environmental

documentation. Viable alternatives would however, be discussed in the PR and the reason given for selecting the preferred alternative.

Thorough Study of Alternatives

Alternatives that are studied in detail (either formally or informally) must comply with legal and administrative requirements and must be technically and economically feasible. The depth of studies should be consistent with the scale of the proposed project and the significance of the project impacts. Additionally, the studies should reflect the need for permits and formal consultations with other agencies. They should also reflect the degree of community involvement.

Environmental Review Requirements

The consideration of alternatives must be consistent with the environmental review requirements. Project delivery frequently depends on the skill with which compliance with these laws is obtained. Therefore, it is important for the PDT and the project manager to have a general knowledge of applicable environmental laws.

Permit compliance for the development of required disposal, staging or borrow sites may require comprehensive environmental studies and reclamation planning.

Full Range of Alternatives

When environmental laws require the formal consideration of alternatives within the environmental document, the full range of options are to be addressed. The document must list specific objectives outlining the project's purpose-and-need and the reasons why certain alternatives did not meet these objectives and were consequently set aside. All significant adverse effects of each reasonable alternative must be identified. For each such effect, all reasonable mitigation measures must also be identified. The environmental document provides a record of the decision-making process.

Constructability Reviews

Constructability reviews (CRs) improve project quality and overall constructability in an effort to reduce contract change orders and delay claims. These reviews also improve the communication between construction and other project team members, assure that field reviews occur, and minimize plan changes at the final design stages.

In addition, constructability reviews conducted at project closeout are extremely valuable in assisting the project team in improving future projects.

Definitions

Constructability review – a validation process that assures the plans, specifications, and estimate effectively define the project so that it can be built by a competent contractor. The constructability review process is an iterative, multidisciplinary review of project quality.

Work plan – a resourced project schedule. The work plan identifies Caltrans' project-specific work breakdown structure elements and defines the cost, timeline, Caltrans resources, deliverables, and requirements of each. For the Caltrans work breakdown structure elements used in work plans, see the *Workplan Standards Guide, Release 11.1*.

Law

Per *California Public Contract Code* Section 10120, "Before entering into any contract for a project, the department shall prepare full, complete, and accurate plans and specifications and estimates of cost, giving such directions as will enable any competent mechanic or other builder to carry them out." The constructability review procedure assures this code requirement is met.

Essential Procedures

Constructability reviews will be performed on all projects that exceed the Minor A dollar limit as defined by the CTC, including projects sponsored by others. The number of constructability reviews is based on the project's complexity. Figure 8-3 shows the number of constructability reviews required based on the complexity of the project. Caltrans reports constructability review performance measures to the FHWA per the Stewardship Agreement.

For this discussion of constructability reviews, the terms project manager, design task manager, project engineer, and other functional unit staff refer to the implementing agency's team members. Roles and responsibilities that are specific to Caltrans will be specified as such.

Exceptions to not performing a constructability review or modifying the number of required constructability review reviews must be documented and approved by the

District or Region Director. This exception authority may be delegated to the Deputy District Director or Region Division Chief for design and construction jointly. The request justifying the policy exception must be generated by the project engineer and submitted by the project manager. The request must contain a risk management plan, as discussed in the *Project Risk Management Handbook: A Scalable Approach*, to satisfy the intent of this policy.

The Deputy District Director or Region Division Chief of Construction is required to indicate concurrence that the response to comments generated by the constructability review is adequate. The constructability review will not be considered complete without this concurrence from construction. The Deputy District Director or Region Division Chief of Construction may delegate this authority to the district or region district construction manager or senior.

The project manager, along with the PDT, is responsible for selecting the appropriate constructability review level, assuring that sufficient time and resources are allocated for the constructability review in the project work plan, and ensuring that the constructability reviews take place at the established times. Project Development Categories discussed in Section 5 are used to determine a project's complexity.

Figure 8-3 Milestones Requiring a Constructability Review

Project Development Category	CR Level	PID	PA&ED	60% PS&E	95% PS&E	Construction Closeout
1, 2, 3	1	X	X	X	X	X
4	2	X	X		X	X
5	3	X			X	X

Project Initiation Document Constructability Review

The PID constructability review is a "fatal flaw" type review to assure that all alternatives are constructible based on the available level of detail. The PID constructability review must occur once the alternatives have been adequately scoped and prior to approval of the PID. The constructability review also includes a review of the proposed project work plan and schedule.

Project Approval and Environmental Document Constructability Review

The PA&ED constructability review assures that all of the alternatives and the proposed preferred alternative are constructible on the available level of detail. This review is particularly important during consultation with environmental permitting agencies that may establish construction windows or place specific mitigation

requirements on the project. The constructability review includes the review of the proposed work plan, schedule, environmental requirements, and construction impacts.

60% Plans, Specifications, and Estimate Constructability Review
The 60% PS&E constructability review is a detailed review of:

- Final project geometrics,
- Completed earthwork/grading plans,
- Drainage layout,
- Preliminary quantity calculations,
- Final right-of-way requirements,
- Traffic control,
- Construction staging,
- Permits, licenses, agreements, certifications (PLAC), and approvals,
- Material disposal, staging, and borrow sites, and
- Any design modifications or schedule or resource changes since the previous review.

95% Plans, Specifications, and Estimate Constructability Review
The 95% PS&E constructability review incorporates the project safety reviews and builds upon prior reviews.

This constructability review includes a check of:

- Final quantities,
- Special provisions (including number of contract working days), and
- Project cost estimate.

Construction Closeout
The construction closeout incorporates discussion regarding future improvements for the PDT. It may include a survey of the construction contractor, contract change orders, delay claims, and other staging or construction issues for the project closeout report.

In the construction closeout meeting, the PDT meets with the construction team (including resident engineer and area senior) in assessing the overall quality of the design product. This meeting should take place prior to construction closeout. The format of the meeting should focus on positive aspects of the project as well as topics to improve on. The resident engineer will schedule the construction closeout

meeting, finalize the report as part of the project closeout activities, and distribute to the PDT members.

Constructability Review Meeting

The districts/regions have the flexibility to conduct the constructability review meetings in a way that best fits with their current practices and organization. The constructability review team members should be multidisciplinary and may include PDT members or other subject matter experts. For example, constructability review team members may include representatives from design, construction, environmental, maintenance, traffic, right-of-way, and structures. At the early constructability review levels, it may be appropriate to include regulatory (permitting) agencies or local agency staff. Later constructability review levels may include representatives from material/geotechnical, hydraulics, utilities, and local agencies or permit agencies. Headquarters representation should include the Project Delivery Coordinator and construction reviewer for larger, more complex projects.

Comments from the constructability review team members are discussed at the constructability review meeting and should focus on constructability issues. The goal is to resolve all comments during the meeting. The design task manager and the project manager have the overall responsibility to assure that all comments are adequately addressed. The response to comments are documented and then sent to district construction for concurrence. The constructability review is not considered complete until the Deputy District Director or Region Division Chief of Construction, or delegate, has concurred with the response to comments.

Implementation Responsibilities

Figure 8-4 outlines the responsibilities for constructability review activities as they pertain to a Caltrans administered project and a locally administered project.

Figure 8-4 Key Roles and Responsibilities for Constructability Review Activities

Required Activity	Responsibilities for Projects Implemented by Caltrans	Responsibilities for Projects Implemented by Others (not Caltrans)
Include constructability review meetings in project work plan	Caltrans project manager	Project manager
Assign experienced personnel to participate in the constructability review process and provide thorough and timely comments	Caltrans functional managers	Project manager
Record compliance of the constructability review policy with schedule	Caltrans project manager	Caltrans oversight engineer
Distribute project information to appropriate units prior to constructability review (all phases except Construction Closeout)	Caltrans design task manager	Project manager
Schedule and coordinate constructability review meetings	Caltrans design task manager in conjunction with project management	Project manager
Assure that all constructability review comments are either adequately addressed or documented and explained in the project risk management plan	Caltrans project manager, Caltrans design task manager, and Caltrans functional unit technical expert	Project manager
Send final response to comments to the Deputy District Director Region Division Chief of Construction (or delegate)	Caltrans project manager	Project manager
Obtain concurrence to the responses to comment.	Caltrans project manager	Project manager
Schedule construction closeout meeting, distribute information, address comments, and document meeting	Caltrans resident engineer	Construction engineer
Include in the project history file the number of constructability reviews required by policy and the number of constructability reviews conducted	Caltrans project manager	Project manager
Assure compliance to constructability review policy	Project engineer prior to Ready to List certification	Caltrans oversight engineer prior to requesting issuance of the encroachment permit

Life-Cycle Cost Analysis

Life-cycle cost analysis is an effective and useful tool used nationwide to determine the best value for spending limited resources. A life-cycle cost analysis takes into account various current and future financial obligations and impacts of a particular design, including initial costs, future maintenance costs, future rehabilitation costs, and costs of the user (motorists and the movement of goods). The alternative with the

lowest life-cycle cost is viewed as having the lowest impact to the State even if it has higher initial costs.

To ensure that the costs over the life of a project on the State Highway System are considered when making project decisions, life-cycle cost analyses are used regardless of funding sources.

Life-cycle cost for all alternatives investigated shall be documented in project initiation documents and project approval documents. For projects involving work on the State Highway System, a life-cycle cost analysis shall be performed prior to programming construction capital.

Life-cycle cost analyses information and procedures for pavement are located in the *HDM*, Topic 619 – Life-Cycle Cost Analysis and the *Life-Cycle Cost Analysis Procedures Manual*.

Formal Consideration of Alternatives

Alternatives must be formally considered within the environmental review process under any of the following circumstances:

- When an environmental impact report (EIR) or environmental impact statement is prepared
- When an adverse impact is expected on any of the following protected resources:
  - Endangered species
  - Public parks, recreation areas, or wildlife and waterfowl refuges
  - Historic sites
  - Aquatic ecosystems, including wetlands
  - Farmlands or agricultural preserves
  - Floodplains
- When a hazardous waste site is expected to be impacted

The PDT may find it most expedient to propose a project alternative that would avoid these circumstances. Conversely, there are situations where due to the public controversy surrounding a project, or due to a project's high public profile, the PDT may appropriately elect to address project alternatives in a formal manner—even though not required.

Defensible Alternative Selection Process

If project alternatives are formally considered, it is extremely important to embark upon a systematic and defensible alternative-selection process. It has been shown time and again that a quality process from the outset, carefully targeted to the community, will save delivery time and money and result in a better end-product.

Consider the following key points during this process:

- Early identification of impacts—the need for early identification of significant environmental impacts, uses of protected resources, and impacts on hazardous wastes.
- Project purpose-and-need—the need to develop a thorough and accurate description of the project's purpose-and-need.
- Funding—Alternatives must take into account the flexible funding that is available for congestion relief projects.
- Close cooperation—the project's engineering, environmental, and transportation planning staffs must work together as a team. This is best accomplished with frequent, informal interaction.
- Decision maker—the preparer of the environmental document does not determine if the project is to proceed; that is the jurisdiction of the District Director. The environmental document identifies the project's "pluses and minuses." As such, it can be used by the District Director as an informational tool that will help in making an informed project decision.

SECTION 7 Policies and Procedures that Span the Project Development Process

ARTICLE 1 Introduction

During the project development process there are many issues to consider. The following Chapters in Part 2 (7 through 15) give a chronological description of most items that may need consideration. Other topics that relate to the entire project development process, but are difficult to describe chronologically, are covered in this section and in Part 3. Part 3 topics describe policies that are specialized topics or reach beyond the considerations of a single project, such as topics of general application by project development personnel even if a project is not involved, or topics that apply to locations or limits that are not the same as those of a particular project.

This section provides information on topics that may affect specific projects throughout the project development process, and if overlooked may cause significant fiscal and scheduling problems. These topics need to be identified at the project initiation stage and incorporated into the proposed project as appropriate, with documentation as needed in the project initiation and approval documents.

ARTICLE 2 Right-of-Way Considerations

Right-of-way issues can significantly affect the development, scope, and cost of a project. If overlooked, right-of-way issues can delay or seriously impact the project schedule.

Relocation Impact Studies

Relocation impact documents are prepared in accordance with the procedures outlined in Section 10.05 of the *Right of Way Manual*. These studies are required on all projects that displace any person or business. A final relocation impact study will be completed for the preferred alternative so that necessary revisions may be included in the final environmental document.

Relocation impact studies are often complex and time-consuming; therefore, requests for the studies should be submitted to the district right-of-way unit as early in the project development process as possible. This is particularly important if “last resort

housing" or "replacement of affordable housing" is involved. The importance of submitting good mapping and other base data to the district right-of-way cannot be overemphasized. The quality of the information submitted directly relates to the validity of right-of-way impact studies.

Airspace Lease Areas

The *California Streets and Highways Code* Section 104.12(c) requires Caltrans to consider future lease potential of areas above or below State highway projects when planning new State highway projects. The PDT should determine whether the proposed project is in an area of high land values having potential for future airspace leases. If so, and if the geometric plan can accommodate or can be modified to accommodate airspace leases, the district airspace committee is requested to review the appropriateness of incorporating such provisions into the project.

Where the district airspace committee has determined that provision for future airspace leases is appropriate, the involved local agency is contacted to ascertain compatibility with local land-use plans and the agency's willingness to make a financial commitment for any added costs. Unless airspace lease provisions are required to mitigate project impacts, any added costs must be borne by others (either public or private sources).

Right-of-Way Cost Data

Right-of-way cost estimates and parcel data are prepared in accordance with the *Right of Way Manual*. The right-of-way data sheet is used by the district right-of-way unit to provide this information when requested.

Development of right-of-way cost estimates are often complex and time consuming, so requests for such should be submitted to the district right-of-way unit as early in the project development process as possible. Good mapping and other base data provided by the design unit are important as their quality directly impacts the validity of the right-of-way cost estimates which are a component of the project cost estimate.

Railroad Involvement

It is the design unit's responsibility to provide the district right-of-way unit with approximate geometric maps, profiles, and cross sections for the purpose of determining railroad involvement and for use in subsequent negotiations, as

necessary. Refer to Chapter 3 – Involvement of Caltrans Functional Units, Sections 3 and 8.

Utility Involvement

It is the design unit's responsibility to provide the district right-of-way unit with approximate geometric maps, profiles, and cross sections for the purpose of determining utility involvement and use in subsequent negotiations, as necessary. Refer to Chapter 3 – Involvement of Caltrans Functional Units, Section 13.

Any exceptions to Caltrans' policy on encroachments must be submitted to the Headquarters Division of Design (DOD) Division Chief, Attention: Encroachment exceptions for approval. For more information, see Chapter 17 – Encroachments in Caltrans' Right of Way.

ARTICLE 3 Disposal, Staging, and Borrow

Measures must be taken to ensure the availability of disposal, staging or borrow sites from or for transportation projects. Disposal, staging, and borrow may or may not be contiguous with the project limits. Easements or acquisitions may be required to harvest, process or haul materials. See *HDM*, Topic 111 – Material Sites and Disposal Sites, and *Design Information Bulletin 85* – Guidance for the Consideration of Material Disposal, Staging and Borrow Sites, for further guidance.

ARTICLE 4 Responsibilities of Utility Companies and Other Owners

A preliminary determination of the financial responsibilities of utility companies and other owners is needed to prepare a good estimate of State costs. Owners of non-Caltrans facilities located within the highway right-of-way may be required to participate in any relocation, reconstruction, or improvements required by proposed highway improvements.

At a very early stage in the project studies, a thorough investigation is made of all affected facilities to determine ownership. Particular attention should be paid to water carrying facilities, as they may appear to be highway related facilities, but may actually belong to an irrigation or reclamation district or may be part of a State water project. These facilities may have been installed under permit, which requires owner participation in subsequent modifications. The previous investigations should reveal ownership, prior rights, permit obligations, etcetera.

State funds are not used to pay for obligations that have been incurred by others as a condition for placement of their facilities within Caltrans right-of-way.

- Public Utility Owned Facilities

  Public utility facilities, both publicly and privately owned, that are to be constructed as a part of a transportation project, require a determination of liability. The determination is prepared by the district right-of-way unit and approved by the Headquarters Division of Right of Way, prior to submittal of the PS&E package to the Headquarters Division of Engineering Services-Office Engineer. The public utility company is notified to relocate their facilities by the district after this approval is given. Refer to Chapter 13 of the *Right of Way Manual* for details.

- Non-Utility Facilities
  - Non-Common Carrier Facilities

    Non-utility facilities (such as non-common carrier oil company pipelines) also require a determination of liability as described previously.

  - Sidewalks

    Financial responsibility for construction of sidewalks is established in accordance with *HDM* Topic 105 – Pedestrian Facilities.

  - Private Access Openings

    Revisions to private access openings (such as driveways and road approaches) are covered in Chapter 26 – Disposal of Rights-of-Way for Public or Private Road Connections and *HDM* Index 205.5 – Financial Responsibility.

  - Mailboxes

    Movement of mailboxes is discussed in the *Construction Manual*, Section 4-15 – Existing Facilities.

ARTICLE 5 Mobility Considerations

Complete Streets

Definitions

Complete-streets – a transportation facility that is planned, designed, operated, and maintained to provide safe mobility for all users, including bicyclists, pedestrians, transit riders, and motorists, that is appropriate to the function and context of the facility.

Law

Various State laws promote and facilitate the integration of multimodal travel for people of all ages and abilities.

Section 65302 of the *California Government Code* requires that the circulation element of a local government's general plan establish a plan for a balanced, multimodal transportation network. This network must meet the needs of all users of streets, roads, and highways for safe and convenient travel in a manner that fits the rural, suburban, or urban context of the general plan. The Statute states that users of streets, roads, and highways include bicyclists, children, persons with disabilities, motorists, movers of commercial goods, pedestrians, transit riders, and seniors. The Statute focuses on the local agency's responsibility to modify the general plan circulation element by January 1, 2011, if the circulation element has any substantial changes. Caltrans recognizes that the State Highway System should be a coordinated component of the street and highway networks established by Caltrans' local government partners. Caltrans must partner with these local agencies during the development of guidelines and circulation elements.

Section 890 through Section 894.2 of the *California Streets and Highway Code* provide that the legislature's intent is to establish a bicycle transportation system to achieve the commuting needs of all travelers with the foremost consideration given to employees, students, business persons, and shoppers.

State law has codified the use of bicycles as a mode of transportation that uses the streets and highways of the State. Section 21200 through Section 21212 of the *California Vehicle Code* provide that persons riding bicycles have the same rights and must follow the same laws as motor vehicle drivers unless the local jurisdiction prohibits bicycle operation. Section 21960 of the *California Vehicle Code* provides

that freeways and expressways are open to bicyclists and pedestrians unless Caltrans makes a decision to restrict the use of them to these users. If the use of these facilities is restricted, these facilities must be properly signed to show this restriction.

Policy

Caltrans' intent is to ensure that travelers of all ages and abilities can move safely and efficiently along and across a network of complete-streets.

All transportation improvements are opportunities to fulfill the objectives of short-range and long-range transportation plans. They can improve safety, access, and mobility for all travelers in California. Caltrans recognizes that vehicular, bicycle, pedestrian, and transit modes are all integral elements of the transportation system. Bicycle, pedestrian, and transit travel is facilitated by envisioning complete-streets early in system planning. Developing a network of complete-streets requires collaboration and partnership among all Caltrans functional units and stakeholders. Development of complete-streets on the State Highway System is applicable to all facility types including freeways, expressways, and conventional facilities where users of different modes of transportation are legal roadway users and have needs identified in transportation planning documents. To ensure that the needs of complete-streets are addressed, implementation of the plan continues through project scoping, project delivery, maintenance, and operations. Addressing the safety and mobility needs of all users (motorists, bicyclists, pedestrians, and transit users), regardless of funding, is the intent of this policy.

High-Occupancy Vehicle (Bus and Carpool) Lanes

Caltrans policy (refer to the *High-Occupancy Vehicle Guidelines* for more information) requires consideration of a high-occupancy vehicle lane alternative for all capacity additions to metropolitan freeways or new metropolitan freeways, and to recommend high-occupancy vehicle preferential lanes at ramp meters where appropriate. Districts with major metropolitan areas work with the regional transportation planning agencies to develop a region wide high-occupancy vehicle lane system, and these systems are included in the regional transportation plans by the regional agencies, providing the basis for programming high-occupancy vehicle lane projects.

Depending on such factors as transportation demand, travel time, cost, safety considerations, maintenance considerations, enforcement requirements, funding

availability, environmental considerations, and community support, the specific high-occupancy vehicle design and operational features considered in project planning will vary. Since the goal is to optimize the people-carrying capability of the high-occupancy vehicle lanes, transit should be given preference, with vanpooling following and then carpooling. Proposals for lane additions and new facilities should be analyzed for mixed-flow and high-occupancy vehicle operation to identify the alternative that will ultimately result in less overall person delay or the most increase in person carrying capacity. Separate roadways for high-occupancy vehicles should be considered when travel demand, cost-effectiveness and operational needs justify those facilities. Convertibility to rail is required under certain conditions when a new alignment or new structures are proposed.

Section 21655.6 of the *California Vehicle Code* indicates that approval by the affected transportation planning agency or county transportation commission must be obtained before Caltrans may implement exclusive or preferential use of highway lanes for high-occupancy vehicles. Section 21655.5 of the *California Vehicle Code* and Section 149 of the *California Streets and Highways Code* indicate that Caltrans, prior to constructing or establishing bus and carpool lanes, shall conduct competent engineering estimates of the effect of such lanes on safety, congestion, and highway capacity.

When considering high-occupancy vehicle lanes it is important for the project manager or the project engineer to consider the need to seek support from local legislators, the public and local governments, and for coordination with the CHP concerning operation and enforcement.

The *High-Occupancy Vehicle Guidelines* should be consulted for more detailed information on policy and on planning, operations, geometric design, ingress and egress, signing and delineation, and enforcement. Appendix B of the *High-Occupancy Vehicle Guidelines* contains a sample table which should be used to summarize the analysis of the congestion, capacity, and safety ramifications of the alternatives for inclusion in the DPR and PR.

Park-and-Ride Facilities

Park-and-ride facilities must be considered for inclusion on all major transportation construction projects that include, but are not limited to, new freeways, interchange modifications, lane additions, transit facilities, and high-occupancy vehicle lanes. Section 146.5 of the *California Streets and Highways Code* contains specific legal

requirements regarding the selection and funding of these facilities. It is important to consider park-and-ride facilities before setting right-of-way lines. The district park-and-ride coordinator must be consulted as to the appropriateness of including park-and-ride facilities and for assistance in documenting compliance with the legal requirements in the project initiation and project approval documents. Full justification is required for proposals that are contrary to the park-and-ride coordinator's recommendations.

Park-and-ride facilities are not permitted within interchange areas except with the review and approval from the Headquarters Project Delivery Coordinator and the Headquarters Traffic Engineering Liaison. Generally, these locations will be approved only if no other area is acceptable or economically justifiable.

Additional information on park-and-ride facilities can be obtained from the Headquarters park-and-ride coordinator through the Headquarters Traffic Engineering Liaison. For the design of complex park-and-ride facilities and specific planting or erosion control requirements, consult with the district landscape architect.

Pedestrian Accessibility

Buildings and transportation facilities on all projects must be accessible within the State highway rights-of-way in accordance to federal and State law. The *Americans with Disabilities Act of 1990*, along with its implementing regulations, and the *California Government Code*, Section 4450 et seq., prescribe that buildings and facilities shall be made accessible to persons with disabilities. Accessibility design standards for the State of California are prescribed in *Title 24 California Code of Regulations;* in Part 2, the *California Building Code*. The Department of General Services, Division of the State Architect (DSA), oversees *California Building Code* compliance.

Except for rail and transit stations, within the State highway rights-of-way, Caltrans (in addition to Division of the State Architect) is authorized by State law to certify, on a project-by-project basis, that a project complies with State pedestrian accessibility design standards for transportation facilities. *Design Information Bulletin 82* – Pedestrian Accessibility Guidelines for Highway Projects, provides design guidance on pedestrian accessibility for highway projects and how to comply with the various federal laws and State codes.

Division of the State Architect reviews and provides the required approval that a rail or transit station project complies with the State pedestrian accessibility code.

For additional discussion on pedestrian facilities, see the Chapter 31 – Nonmotorized Transportation Facilities.

Transit Related Facilities

Transit related highway facilities, including bus turn-outs, passenger loading areas, passenger benches and shelters, and special traffic control devices, should be considered where appropriate. Section 148 of the *California Streets and Highways Code* contains specific requirements concerning these facilities.

Transportation Management Plans

Deputy Directive DD-60-R2 – Transportation Management Plans, requires a transportation management plan (TMP) for all projects on the State Highway System to minimize disruption to the traveling public. Transportation management plan measures must be considered during project initiation and included for project approval to ensure they are incorporated into construction contracts.

A transportation management plan is an approach for alleviating or minimizing work-related traffic delays by the effective application of traditional traffic handling practices and an innovative combination of various strategies. These strategies include public awareness campaigns, motorist information, incident management, construction methods, demand management, and alternate route planning. Specific guidance for application of the various strategies is contained in the *Transportation Management Plan Guidelines*.

Prolonged Ramp Closures

Temporary ramp closures of more than 10 consecutive days require preparation of an economic impact study by the environmental unit. Closures of less than 10 days may require a study, depending upon circumstance. Refer to Volume 4 of the *Standard Environmental Reference* for further information.

Accommodation of Oversize Loads

In accordance with policy, State freeways must be designed to provide passage for vehicles of unrestricted height while moving in and out of the area; to or from airports, harbors, and testing sites; and to or from ultimate destination for use or

assembly. Exceptions to this policy should only be considered when an existing city or county facility allows for bypass of a State facility that has restrictions preventing passage of overheight vehicles.

In those instances where it is impractical to follow this policy due to engineering controls, excessive costs, or community values considerations, the impacted industries should be contacted and a mutually satisfactory solution sought. Impacted industries are those presently engaged in manufacturing of extralegal-dimensioned articles or those industries who have notified Caltrans of their potential for such activity. (Aerospace represents a significant portion of the impacted industries.)

Refer to Chapter 21 – Exception to Design Standards, for a discussion of the Department of Defense Rural and Single Interstate Route System for which a minimum vertical clearance is required.

ARTICLE 6 Environmental Considerations

Public Access to Waterways

- **Navigable Rivers:** Section 84.5 of the *California Streets and Highways Code* requires full consideration of, and a report on the feasibility of providing a means of public access for recreational purposes to any navigable river over which a new bridge is being constructed. The Office of the Attorney General finds that a "navigable river" as defined under California common law, is any watercourse "capable of being navigated by oar or motor propelled small craft" (*People ex rel. Baker v. Mack* (1971) 19 Cal.App.3d 1040, 1050).

  It is necessary to discuss this subject at any public hearing and to justify and document the position taken on public access to waterways in the project approval document thus satisfying State code. All environmental and engineering aspects must be considered as well as the intent of the Legislature to maximize such public access by requiring its consideration during the planning of such projects. As such, the potential for this item should be fully considered and addressed in the PID and PR as appropriate. See Appendix K – Preparation Guidelines for Project Report, Article 2, Section 7 "Report on Feasibility of Providing Access to Navigable Rivers."

- **Public Boat Ramps:** Section 147 of the *Federal-Aid Highway Act of 1976* provides that certain federal funds (see Chapter 4 – Programming, Article 4) may be used to construct access ramps to public boat launching areas in conjunction with bridge projects on these systems. In addition, it is not the intention of Section 147 to provide an extended roadway system within publicly owned recreation areas, but rather to provide direct access from the highway right-of-way to the water traversed by such highway.

Floodplains

Identify and discuss any impacts on or encroachment on base (100-year) floodplains. The project engineer is responsible for initiating the floodplain evaluation process. For further guidelines, consult the *Standard Environmental Reference* and the *HDM*, Topic 804 – Floodplain Encroachments.

National Pollutant Discharge Elimination System

A copy of the National Pollutant Discharge Elimination System (NPDES) stormwater permit and notice of intent (NOI), if required, must be included in the PS&E package submitted to the Headquarters Division of Engineering Services-Office Engineer before the project can be advertised.

The National Pollutant Discharge Elimination System was established by Congress as part of the original Federal *Clean Water Act of 1972*. Article 402 of the Act established a system of permits for discharge of wastes to surface waters of the United States. Prior to 1990, these permits focused mainly on municipal and industrial discharges. After 1990, these permits also included provisions related to nonpoint sources—namely stormwater.

Until recently, Caltrans had both kinds of permits: those related to discharges of waste to surface waters of the United States, and those related to stormwater discharges. The former most often involved discharges of wastewater from maintenance stations and safety roadside rest areas. Since the advent of washrack conversions at maintenance stations, Caltrans has transitioned out of non-stormwater discharges to surface waters of the United States. The later type of National Pollutant Discharge Elimination System permit—those associated with stormwater discharges—is currently the only type of National Pollutant Discharge Elimination System permit within Caltrans, and because they are so recent, and their requirements are so specific, they are often problematic.

A general construction stormwater permit has been promulgated by the State Water Resources Control Board for all areas of the State not covered by regional water quality control board stormwater permits, and applies to all construction project proponents involving more than 1 acre of disturbed earth. For any project that requires a general permit, a notice of intent must be filed with the State Water Resources Control Board along with the appropriate filing fee. The general permit requires that a storm water pollution prevention plan (SWPPP) be developed and

implemented for each construction site. A storm water pollution prevention plan identifies pollutant sources and best management practices (BMPs) to control those pollutants.

The general construction stormwater permit is superseded in areas where an individual stormwater permit has been issued to Caltrans by a regional water quality control board. Projects located in areas covered by these individual permits must follow procedures specified in the individual permit, and the district has the responsibility of coordinating with the regional board.

An approved storm water data report (SWDR) as described in *Storm Water Quality Handbooks: Project Planning and Design Guide* shall be completed during the project initiation, project approval, and PS&E phases. All storm water data reports submitted for approval shall use the storm water data report format.

Efforts continue to try and bring all Caltrans facilities under one permit which all regional water quality control boards, the State Water Resources Control Board, and the Federal Environmental Protection Agency (EPA) will accept. For the most current information, contact the district stormwater coordinator.

Use of Asphalt Concrete Grindings, Chunks, and Pieces

Section 5650 of the *California Fish and Game Code* indicates that it is unlawful to deposit asphalt, other petroleum products, or any material deleterious to fish, plant life, mammals, or bird life where they can pass into the waters of the State. In addition, Section 1602 of the *California Fish and Game Code* requires notification to the California Department of Fish and Wildlife prior to construction of a project that will result in the disposal or deposition of debris, waste or other material containing crumbled, flaked, or ground pavement where it can pass into any river, stream, or lake. When constructing transportation facilities, Caltrans frequently uses asphalt in mixed or combined materials such as asphalt concrete (AC) pavement. Caltrans also uses recycled AC grindings and chunks. There is a potential for these materials to reach the waters of the State through erosion or inappropriate placement during construction.

The first step is to determine whether there are waters of the State in proximity to the project that could be affected by the reuse of AC. Waters of the State include: (1) perennial rivers, streams or lakes that flow or contain water continuously for all or most of the year; or (2) intermittent lakes that contain water from time to time or

intermittent rivers or streams that flow from time to time, stopping and starting at intervals, and may disappear and reappear. Ephemeral streams, which are generally exempt under provisions developed by Caltrans and the California Department of Fish and Wildlife, are those that flow only in direct response to rainfall.

The reuse of AC pavement grindings will normally be consistent with the *California Fish and Game Code* and not require a 1602 Agreement when these materials are placed where they cannot enter the waters of the State. However, there are no set rules as to distances and circumstances applicable to the placement of asphaltic materials. Placement decisions must be made on case-by-case basis, so that such materials will be placed far enough away from the waters of the State to prevent weather (erosion) or maintenance operations from dislodging the material into State waters. Site-specific factors (such as steep slopes) should be given special care. Generally, when AC pavement grindings are being considered for placement where there is a potential for problems, the district environmental unit should be notified to assist in determining whether a 1602 Agreement is appropriate and what mitigation strategies are available to prevent the materials from entering the waters of the State.

If there is the potential for reused AC materials to reach waters of the State through erosion or other means during construction, such work would normally require a 1602 Agreement. Depending on the circumstances, the following measures should be taken:

- The reuse of AC pavement grindings as fill material and shoulder backing must conform to the Caltrans *Standard Specifications*, applicable manuals of instruction, contract provisions, and the Memorandum of Understanding described in this sub-article.
- AC chunks and pieces in embankments must be placed above the water table and covered by at least one foot of material.

A Memorandum of Understanding dated January 12, 1993, outlines the interim agreement between the California Department of Fish and Game (currently named the California Department of Fish and Wildlife) and Caltrans regarding the use of asphaltic materials. It provides a working agreement to facilitate Caltrans' continued use of asphaltic materials and avoid potential conflicts with the *California Fish and Game Code* by describing conditions where use of asphalt road construction material by Caltrans would not conflict with the *California Fish and Game Code*.

Specific understandings contained in the Memorandum of Understanding are:

- Asphalt Use in Embankments
  Caltrans may use AC chunks and pieces in embankments when these materials are placed where they will not enter the waters of the State.

- Use of AC Pavement Grindings as Shoulder Backing
  Caltrans may use AC pavement grindings as road shoulder backing when these materials are placed where they will not enter the waters of the State.

- Streambed Alteration Agreements
  Caltrans will notify the California Department of Fish and Wildlife pursuant to Section 1602 of the *California Fish and Game Code* when a project involving the use of asphaltic materials or crumbled, flaked, or ground pavement will alter or result in the deposition of pavement material into a river, stream, or lake designated by the California Department of Fish and Wildlife. When the proposed activity incorporates the agreements reached under Section 1602 of the *California Fish and Game Code*, and is consistent with Section 5650 of the *California Fish and Game Code* and this Memorandum of Understanding, the California Department of Fish and Wildlife will agree to the use of these materials.

There may be circumstances where agreement between the California Department of Fish and Wildlife and Caltrans cannot be reached. Should the two agencies reach an impasse, the agencies enter into a binding arbitration process outlined in Section 1603 of the *California Fish and Game Code*. However, keep in mind that this arbitration process does not exempt Caltrans from complying with the provisions of the *California Fish and Game Code*. Also it should be noted that this process is time consuming, requiring as much as 72 days or more to complete. Negotiations over the placement of AC grindings, chunks, and pieces are to take place at the district level as part of the 1602 Agreement process.

Consideration of Visual Impacts and Protection of Visual Quality

State highway improvements address transportation needs while recognizing community values and minimizing impacts to the environment. Caltrans supports and encourages the preservation and enhancement of visual quality in planning and designing transportation facilities.

Definitions

Designated scenic highway – a State or county highway (total or portions) recognized for its scenic value. Other Caltrans guidance may refer to "scenic highway," "official scenic highway," "State scenic highway," or "county scenic highway." The list of designated scenic highways is available at: *http://www.dot.ca.gov/hq/LandArch/16_livability/scenic_highways/scenic_hwy.htm*

Scenic corridor – land visible from the highway right-of-way that is comprised primarily of scenic and natural features. Topography, vegetation, viewing distance, and jurisdictional lines determine corridor boundaries.

Scenic resource – visually unique, natural, cultural, or historic features, such as large trees, rock outcroppings, scenic vistas, or significant structures as determined by a scenic resource evaluation.

Scenic resource evaluation – the identification and description of scenic resources and potential project impacts to these resources that is used to make the environmental determination.

State Scenic Highway system – California's designated scenic highways and highways eligible for designation as listed in the *California Streets and Highway Code* Sections 263.1 through 263.8.

Visual Impact Assessment (VIA) – the identification and description of visual quality, potential project impacts to this visual quality, and the relative significance of the impacts. The visual impact assessment also recommends appropriate strategies for impact avoidance or mitigation.

Conduct Scenic Resource Evaluation and Visual Impact Assessment

The environmental review process requires the project sponsor's licensed landscape architect to analyze potential impacts to the visual environment for all projects. This

analysis involves conducting a preliminary assessment and, if required, a scenic resource evaluation and visual impact assessment. For a Caltrans' sponsored project, the district landscape architect is required to conduct these studies.

A preliminary assessment during the PID-phase identifies scenic resources, scenic corridors, and designated and eligible scenic highways. The assessment establishes the need and level of study for the visual impact assessment based on potential physical changes to the environment. Specific information regarding the scenic resource evaluation and visual impact assessment is described in Chapter 27 of the *Standard Environmental Reference*. Additional information on designated scenic highways is provided in this article.

If the preliminary assessment identifies a scenic resource on the project, a scenic resource evaluation is prepared during the Project Approval and Environmental Document (PA&ED) phase of work. If the project results in damage to the scenic resource and it is on a designated scenic highway, the project cannot be classified categorically exempt under CEQA.

A visual impact assessment must be conducted during PA&ED when the preliminary assessment concludes that a proposed project may impact the visual environment. The scenic resource evaluation and the visual impact assessment may be combined into one document.

The project team must consider how the transportation project impacts visual quality. The road and roadside can contribute to the visual quality of the highway and its corridor. The scenic resource evaluation and visual impact assessment help establish a context for the project design. Examples of project features that may contribute to or impact the visual quality of the highway corridor or project area are:

- Road alignment.
- Utilities – the placement of new or relocated utilities to be consistent with *California Public Utilities Code*, Section 320.
- Slopes.
- Vegetation.
- Barriers or rails.
- Historic and cultural features.
- Scenic vistas.
- Structures.
- Lighting.

Impact avoidance is the preferred choice because communities can be highly sensitive to changes in visual quality due to project impacts. When avoidance is not a viable or cost-effective option, every effort should be made to design project features so they are compatible with the character of the highway corridor or project area.

Designated scenic highways have visual qualities that have been documented and are protected by local corridor protection programs. These protection programs reflect community values that should be integrated into the planning and design process.

Additional Information on Scenic Highways

The California legislature created the State Scenic Highway system to establish the State's responsibility for the protection and enhancement of California's natural scenic beauty along State highways. Eligible scenic highways are nominated by local jurisdictions, designated by Caltrans, and protected by corridor protection programs.

Review the *Scenic Highway Guidelines* for information on officially designating or revoking scenic highways.

ARTICLE 7 Owner-Operator Considerations

Interim Projects

Interim projects are subject to the CTC policies. An interim project is any project on or improvement to an existing State highway that is planned to be superseded by construction of a new freeway facility during the period of time between adoption of a freeway alignment and completion of the freeway construction (and subsequent relinquishment of the existing highway).

- CTC Policy:
  The current CTC policy resolution, adopted by the California highway commission on July 30, 1964, sets forth the following responsibilities on interim projects:

  A. Basic Responsibility for all Projects
     1. The correction of drainage conditions that are clearly local problems shall be the responsibility of the local agency.
     2. The financing of all new curbs and gutters, exclusive of those required for channelization, shall be the responsibility of the local agency.
     3. The State shall be responsible for maintaining the structural adequacy of the facility.

B. Interim Projects Estimated to Serve all Traffic for a Minimum Period of Five Years

The State shall be responsible, subject to limitations in item A, for financing the construction of necessary highway widening (including replacement of existing curbs and gutters and the addition of channelization) and for the cost of right-of-way acquisition.

C. Interim Projects Estimated to Serve all Traffic for a Period of Less Than Five Years
   1. For projects that will be under construction prior to budgeting of the freeway project, in addition to item A, the purchase of necessary additional rights of way and construction of new curbs and gutters shall be the responsibility of the local agency. Replacement of existing curbs and gutters will be done by the State.
   2. When the freeway project has been budgeted, the local agencies shall provide 50 percent of all other construction costs for State highway widening in addition to those items previously ascribed to them.
   3. After the freeway is opened for traffic, State responsibility shall be limited to placing the existing highway surface in a state of good repair.

   "... nothing...will preclude financial participation by local agencies in excess of the amounts indicated...the Commission will consider variations from this policy..."

- Implementation
  - Widening Criteria

    Implementation of the interim projects policy should be based on State participation only to the extent of meeting traffic requirements within the interim time period. Extra width of roadbed for medians or for pavement in excess of that needed for such traffic, etcetera, should be financed entirely by the local agency.

    Exceptions to the policy require CTC approval. Justification for extra width at State expense must be contained in the PR. It is expected that the local agency's request for an exception will normally be in the form of a resolution. Headquarters Division of Design will handle the processing to the CTC.

  - Relinquishment

    California Streets and Highways Code, Section 73 governs the relinquishment of the interim facility after the freeway is open to traffic. It requires that highways, as defined in *California Streets and Highways Code*, Section 23, be placed in a state of good repair prior to relinquishment for routes superseded by relocation. Section 73 also

specifies that Caltrans is not obligated for widening, new construction, or major reconstruction, except as the CTC may direct. See Chapter 25 – Relinquishments, for discussion of relinquishment policies and procedures.

- Traffic Signals and Intersection Lighting

  The modification of existing traffic signals, intersection lighting, and channelization required by the freeway will be at State expense.

  Local participation will be sought on the cost of new signals and lighting systems on the existing highway on the basis of the number of legs under each jurisdiction entering the intersection. If a new traffic signal or illumination system, or modification to an existing signal, signal system, or illumination system is urgently needed to improve safety of traffic flow on the State highway, and if local authorities are unable to finance their proper share of the cost, the State may accept a lesser participation (or even no participation) by local authorities. The determination of "urgently needed" will be made by the District Director.

  Construction of traffic signal systems must begin before the freeway is open to traffic. After the freeway is opened, it will be necessary to obtain advance approval from the CTC for a variance from the policy resolution. If signals are to be in operation less than 12 months before the freeway is opened, traffic signal warrants (see the *California Manual on Uniform Traffic Control Devices [California MUTCD)*]) must continue to be met after the freeway has been opened to traffic.

Widening Adjacent to Existing Facilities

On widening projects, such as lane additions, auxiliary lanes, uphill climbing, or passing lanes, etcetera, it is necessary to thoroughly investigate the existing adjacent pavement condition for rehabilitation need. It is not cost-effective or desirable to widen a highway without correcting for bad ride and major structural problems in adjacent pavements if that work is needed. However, certain circumstances may justify deferring the pavement rehabilitation work and programming it as a separate project in the State Highway Operation and Protection Program (SHOPP). If it is believed such circumstances exist, the Headquarters Project Delivery Coordinator should be consulted to discuss deferring the pavement rehabilitation work. Possible options to consider are: widening only—rehabilitation not needed; widening concurrent with pavement rehabilitation; widening with deferred pavement rehabilitation only; and stage construction.

A review of the current pavement management system inventory and report data in conjunction with a field review of the widening project must be made to determine if

pavement rehabilitation is needed in conjunction with the widening. This should be completed during the project initiation phase and then reviewed again during the DPR stage because the pavement condition may have deteriorated during the intervening time.

For AC pavements exhibiting alligator "B" cracking, a deflection study is needed to confirm rehabilitation need and the appropriate pavement rehabilitation strategy. (Refer to Chapter 7, Article 5.) If the deflection study supports rehabilitation, the appropriate strategy and cost of rehabilitation and other project considerations, such as traffic safety needs, must be included in the project and discussed in the project development report (such as: PSR, DPR, PR, etcetera) unless deferred.

When widening contiguous to portland cement concrete (PCC) pavement, if the pavement management system survey data and a field review indicate rehabilitation of the PCC is not an immediate need but will be necessary within 10 years, it should be completed with AC for compatibility with the eventual PCC pavement rehabilitation strategy. If the pavement management system survey data and field review indicate that rehabilitation will not be needed within 10 years, a PCC pavement structural section should be used to widen the existing PCC pavement.

Converting Shoulders to Traffic Lanes

Converting shoulders to a traffic lane (or portion) should only be undertaken when it is the last available means to provide increased capacity and should be done in consultation with the Headquarters Project Delivery Coordinator. The preferred solution is permanent widening in accordance with the design standards in the *HDM*.

Once a decision has been made to convert an existing shoulder (typically AC) to a traffic lane (or portion) a deflection study must be made to determine the structural adequacy of the in-place material. A field review should also be performed to evaluate the condition of the AC for signs that indicate it will provide poor ride quality or require excessive maintenance and rehabilitation in a short period of time (for example: has it become brittle and surface cracked; does it undulate in grade; is it raveling; is it rolled up at the PCC joint, etcetera).

In addition, the need to modify adjacent landscape features should be determined by field review and study of as-built drawings. Consideration should also be given to maintenance of the roadside and how the conversion affects the safety of maintenance personnel.

Safety

- Safety Reviews

  A formal safety review must be initiated on all urban freeway projects and other major projects during the concept and scope development process. The safety review process ensures that design features that limit the exposure of employees and the traveling public to traffic are appropriately considered on all projects. All projects must be reviewed by the district safety review committee prior to the approval of the PSR. Safety concepts identified during the review process that limit the exposure of employees to traffic must be incorporated into the project unless deletion is substantiated, documented, and approved by the District Director. For more information, see *HDM* Index 110.8 – Safety Reviews.

- Field Safety

  Safety is a critical concern for all Caltrans operations. The need for the PDT to conduct field reviews as an ongoing activity has been emphasized. The *Safety Manual*, Chapter 5, "Office and Field Safety," should be consulted for an explanation of safe working procedures for employees who normally work in offices and are unfamiliar with Caltrans field work activities.

  Project planning and design actions also have a significant impact on the safety of required field efforts, such as surveys. Requests for field-determined data should be made after considering the safety aspect and alternate means of obtaining the data. As an example, pavement elevation surveys expose surveyors to traffic and, at times, require lane closures. Although techniques are available to improve the safety of pavement elevation surveys, the best solution is to eliminate, when feasible, the need for field surveys. Improved photogrammetry equipment and techniques provide opportunities to achieve this goal and reduce the demand for field-determined pavement elevation surveys. Not only can the use of photogrammetry eliminate the need for field surveys, it also (a) reduces the survey costs, (b) avoids the creation of traffic congestion resulting from field surveys with required lane closures, and (c) eliminates the need to consider night surveys.

Although photogrammetric elevations may be inadequate for many project planning and design situations, each reduction in the need for field surveys reduces the exposure of surveyors to traffic and improves safety.

Suicide Barrier

Section 14527.1 of the *California Government Code* requires the consideration, during the development of bridge projects, features to deter suicides. All project study reports or other PIDs prepared for projects involving the construction of a new bridge, or replacement of an existing bridge with a history of documented suicides,

shall include a document demonstrating that a suicide barrier was a feature considered for each bridge during the project's planning process. As such, the inclusion of suicide barriers must be fully considered and discussed in the alternatives section of PIDs when applicable.

California Government Code, Section 14527.1

Section 14527.1 states:

> (a) A project study report or project study report equivalent that is prepared for any new project involving the construction of a new bridge, or the replacement of a bridge with a history of documented suicides, which project is included in a regional transportation improvement program, as described in Section 14527, the interregional transportation improvement program, as described in Section 14526, or the state highway operation and protection program, as defined in Section 14526.5, shall include a document demonstrating that a suicide barrier was a feature considered for each bridge during the project's planning process.
>
> (b) "Bridge" means a publicly owned bridge on the national highway system or the federal-aid highway system, or off system, a publicly owned bridge classified as non-federal-aid highway system.
>
> (c) This section does not impose a mandatory duty pursuant to Section 815.6.

Project Size (Dollar Value)

The basic objective in establishing the size (dollar value and project limits) of any project is to obtain the maximum service to public traffic at the earliest feasible date and at a minimum cost. Some reasons for developing large projects include: (1) economic balance of earthwork; (2) provision of a usable segment or segments that can be opened to traffic upon completion; (3) cost effective and safe handling of traffic through or around construction; (4) minimizing the time and costs of project development and construction engineering; (5) keeping the unit cost and overall project cost down; and (6) avoiding conflict between adjacent contractors.

There are, however, offsetting reasons for maintaining a balance of small, medium, and large projects. These include: (1) encouraging competitive bidding by enabling small, medium, and large contractors to compete for projects; (2) providing opportunities for small businesses, including those owned by minorities and women; and (3) maintaining a viable highway contracting industry in California.

Another reason for maintaining a balance of project sizes is to take advantage of stage construction. Stage construction can result in earlier completion of a project and, under certain circumstances, more effectively utilize available funding. Examples where stage construction may be appropriate: (1) during embankment settlement periods, (2) for railroad separations, (3) for major stream crossings, and (4) for interchanges in urban areas in advance of major projects to minimize later interference with local and contractor's traffic. Breaking a large project into shorter segments should be considered whenever the earthwork balance can be maintained and where temporary transition problems are minor between s staged segments.

Risk Management

Project Delivery Directive PD-09 – Project Risk Management, requires that risk management be applied to all capital outlay projects and major maintenance projects delivered by Caltrans. Refer to the *Project Risk Management Handbook: A Scalable Approach* for the requirements and procedures.

Electronic File Sharing

Project Delivery Directive PD-06 – Sharing of Electronic Files, requires sharing of electronic files for certain types of design information within Caltrans and with its delivery partners. The details of what type of information, in what file format, and to whom it is shared are detailed within the directive.

ARTICLE 8 Federal Highway Administration Coordination

Stewardship and Delegation of Federal Highway Administration Authority

See the latest *Stewardship and Oversight Agreement on Project Assumption and Program Oversight* between the Federal Highway Administration, California Division and Caltrans for the project actions assumed by Caltrans and the project actions where FHWA has retained their authority as well as the detail associated with the various oversight responsibilities.

Federal Highway Administration Oversight

FHWA involvement, as dictated by the project aspects, must begin as early as possible for all projects on the State Highway System. FHWA should be consulted so

that both parties have a clear understanding of the project aspects that will require coordination and information sharing to facilitate oversight and future approvals.

The FHWA oversight activities and approvals must be documented in the reports prepared for project initiation and project approval.

Determination of Responsibility for Project Actions

The degree of review and oversight by FHWA on a specific project is determined by the route designation, cost, funding source, and type of work. The main factor for determining if the responsibility for project actions is assumed by Caltrans or retained by FHWA is whether or not a project is on the National Highway System. Projects with an elevated delivery risk may be defined as "Projects of Division Interest" or "Projects of Corporate Interest" and will have specific requirements based on the project aspects. Additionally, FHWA retains their responsibility for project actions for projects on the Interstate System that have been determined to be in a high risk category.

National Highway System Route Designation

The National Highway System includes the Interstate Highway System as well as other roads important to the nation's economy, defense, and mobility. National Highway System routes in California may be determined from the information located at: http://www.fhwa.dot.gov/planning/national_highway_system/

"Projects of Division Interest" and "Projects of Corporate Interest"

The "Projects of Division Interest" are those projects that have an elevated risk, contain elements of higher risk, or present an opportunity for FHWA involvement to enhance meeting their program objectives. They have been further categorized by six types (including federal major projects) of project specific "Projects of Division Interest" and two types of programmatic "Projects of Division Interest." These projects use a risk based approach for determining how the individual project actions will be handled and will be identified in accordance with the process outlined in the stewardship agreement and the detailed guidance (that includes descriptions of the types and categorizations) located at:
http://www.fhwa.dot.gov/federalaid/stewardship/150504podi.pdf

"Projects of Corporate Interest" are a subset of the "Projects of Division Interest" and are projects deemed to be so significant that FHWA is willing to commit additional resources beyond those available at the individual Division level to help ensure successful delivery of the project.

Projects in High Risk Categories

Federal law prevents FHWA from delegating responsibilities for projects on the Interstate System that are in high risk categories. See the latest *Stewardship and Oversight Agreement on Project Assumption and Program Oversight*, for the FHWA California Division determination of high risk categories.

Noteworthy Topics

Topics that have unique procedures are:

New or Modified Access on the Interstate System

FHWA has retained their approval authority for access. For more detail regarding new or modified access on the Interstate System, see Chapter 27 – New Public Road Connections.

FHWA Major Projects

Title 23 Code of Federal Regulations, Section 106 specifies Major Projects as those that cost $500 million or greater. These projects have special requirements that include a project management plan and an annual financial plan. Information on the requirements for Major Projects is located at:
http://www.fhwa.dot.gov/ipd/project_delivery/defined/

FHWA Other Projects

Title 23 Code of Federal Regulations, Section 106 specifies Other Projects as those that cost between $100 million and $500 million. While they are not classified as Major Projects, there is a requirement for an annual financial plan that must be made available to FHWA upon request.

CHAPTER 9 – Project Initiation

Table of Contents

CHAPTER 9 – Project Initiation..... 9-5
ARTICLE 1 Introduction and Definitions..... 9-5
Reference Information..... 9-5
General..... 9-5
Definitions..... 9-6
ARTICLE 2 Laws..... 9-9
General..... 9-9
California Statutes..... 9-9
ARTICLE 3 Policies..... 9-11
General..... 9-11
State Transportation Improvement Program..... 9-11
State Highway Operation and Protection Program..... 9-13
Protection of Public Investment..... 9-14
ARTICLE 4 Essential Procedures..... 9-14
General..... 9-14
Project Selection..... 9-14
Candidate Projects for the State Transportation Improvement Program..... 9-15
Candidate Projects for the
State Highway Operation and Protection Program..... 9-18
Project Initiation Document Templates..... 9-20
Purpose and Need - Defining the Transportation Problem..... 9-27
Design Concept and Design Scope..... 9-29
Scoping Tools..... 9-30
Project Initiation Document Alternative Formulation Strategies..... 9-31
Life-Cycle Cost Analysis..... 9-34
Consensus on the Study Area..... 9-35
Identify Anticipated Environmental Determination/Document and
Compliance..... 9-35
Value Analysis..... 9-36
Exceptions to Design Standards..... 9-36
Safety Review..... 9-37
Constructability Review..... 9-37
Assessment of Federal Highway Administration Involvement..... 9-37
Federal Highway Administration Determination of Engineering and
Operational Acceptability for
New or Modified Access on the Interstate System..... 9-38

Federal Aid Reimbursement - Local Agency Implementation 9-39
Work Plan Development 9-39
Cooperative Features for Capital Improvements 9-40
Federal Funding Requirements 9-40
Project Initiation Document Approval 9-41
Starting Next Phase 9-42
ARTICLE 5 Additional State Highway Operation and Protection Program Procedures 9-42
General 9-42
Scoping Team Field Review 9-42
Safety Analysis 9-43
Approval of Project Scope Summary Report 9-45
Approval of Capital Preventive Maintenance Project Report 9-46
Damage Assessment Form 9-46
ARTICLE 6 Director's Order for Urgent Projects 9-47
ARTICLE 7 Expenditure Authorization Project Report for Minor B and Maintenance Projects 9-48
Minor B 9-48
Maintenance Projects 9-48
Traffic Signal Projects 9-48
ARTICLE 8 Project Initiation Process for Projects-funded-by-others 9-49
General 9-49
Types of Project Initiation Documents for Projects-funded-by-others 9-49
Encroachment Permit Process 9-50
Early Confirmation Required 9-51
Permit Engineering Evaluation Report Process for Projects with Construction Costs from $1,000,000 to $3,000,000 9-55
Project Initiation Document Process for Projects-funded-by-others 9-57
ARTICLE 9 Combined Project Study Report-Project Report 9-58
General 9-58
Ineligible for a Combined Project Study Report-Project Report 9-59
Considerations for a Combined Project Study Report-Project Report 9-59
State Highway Operation and Protection Program Programs 9-60
State Highway Operation and Protection Program Safety Improvement Program 9-60
Projects-funded-by-others 9-60
Project Approvals 9-61
ARTICLE 10 Ceasing Work on Programmed Projects 9-61
Request Process 9-61
Approval Process 9-62
Cease Work at Agreed Milestone 9-62

Table of Figures

Figure 9-1 State Transportation Improvement Program Components and Corresponding Project Development Programming Phases 9-12
Figure 9-2 Project Initiation Links Planning to Programming 9-16
Figure 9-3 Project Initiation Document Templates for the State Highway Operation and Protection Program 9-23
Figure 9-4 The Context 9-32

CHAPTER 9 – Project Initiation

ARTICLE 1 Introduction and Definitions

Reference Information

Some of the references found in this chapter have hyperlinks that connect to Caltrans intranet pages which are not displayable to the general public. Until such time that the specific reference becomes available on the internet, the user will have to contact their district liaison, Caltrans project manager, or the appropriate Headquarters division to inquire about the availability of the reference.

General

The project initiation phase is the first formal project phase in developing a solution for a specific transportation problem. The project initiation phase is subsequent to the system and regional planning process. The outcome of the project initiation process is a project initiation document (PID) that establishes a well-defined purpose-and-need statement, proposed project scope tied to a reliable cost estimate and schedule. The use of State funds for capital improvements on the State Highway System (SHS) requires an approved PID. Any major work on the State Highway System regardless of how it is funded requires an approved PID.

The PID records Caltrans':

- Approval of the project (as defined by the scope, cost and schedule) to compete for State Transportation Improvement Program (STIP) or State Highway Operation and Protection Program (SHOPP) funds; or
- Conceptual approval (as defined in this chapter) of projects-funded-by-others.

A project study report-project development support (PSR-PDS) provides scope approval of projects-funded-by-others (as defined in this chapter), since the PSR-PDS does not provide conceptual approval. With direction from the project development team (PDT) and project sponsors, the PDT:

- Defines the purpose-and-need for the project,
- Gets input from stakeholders,
- Systematically collects and analyzes existing information,

- Identifies alternatives,
- Develops a plan of action to deliver the project, and
- Estimates the project cost and schedule.

This chapter discusses the statutes, definitions, policies, and procedures that apply to the project initiation phase. This chapter should be used in conjunction with Appendices A-X. The appendices contain additional guidance on the preparation of PIDs, commonly used PID formats, input forms, and checklists.

Definitions

Conceptual approval – is an assessment that the project alternatives meet all design standards or have approved exceptions and have had a traffic operational analysis. Adequate information must be provided in the PID for Caltrans to make this assessment. Conceptual approval is not final approval of a project alternative.

Implementing agency – is that entity charged with successful completion of each project component as follows:

1. Project initiation document
2. Completion of all permits and environmental studies
3. Preparation of plans, specifications, and estimate
4. Acquisition of rights-of-way, including, but not limited to, support activities
5. Construction, construction management and engineering, including surveys and inspection

There could be a different implementing agency for each component of a project. To ensure clears lines of responsibility, only one agency can be the implementing agency for a single component. Contract advertisement, award and administration shall be completed by the same implementing agency.

Independent quality assurance – activities performed by Caltrans, as the owner-operator of the State Highway System, to ensure that quality management practices are in place, functioning and effective, resulting in projects being developed in accordance with Caltrans standards, policies, and practices.

Owner-operator – is that entity ultimately responsible for the operation, maintenance and tort liability of a facility. Caltrans is the owner-operator of the State Highway System.

Programming – a process that prioritizes projects for State and federal funding. The two major State programming documents are the State Transportation Improvement Program (STIP) and the State Highway Operation and Protection Program (SHOPP). The major federal programming documents are the Federal Statewide Transportation Improvement Program (FSTIP) and Federal Transportation Improvement Program (FTIP).

Project initiation document (PID) – an engineering document or technical report that documents the scope, cost, and schedule of a project. The PID is an outcome of the project scoping effort. The PID is a record of the purpose-and-need for the project, and the approach that will be taken to meet or reduce transportation deficiencies. It is a record of the existing information, initial assumptions, identified risks, and constraints that drove the development of the project work plan. A PID is used to obtain approval for inclusion of a project into a programming document or to get conceptual approval of a project-funded-by-others.

Project initiation document phase work plan – a work plan that identifies tasks, resources, and the schedule required to complete the PID. The project manager is responsible for the development of the PID phase work plan. A high-level PID phase work plan is used to obtain, allocate, and manage resources used by various functional units. Refer to the Headquarters Division of Transportation Planning, Office of Program and Project Planning for more information about work plan development.

Project scope – identifies the significant aspects of a project that are necessary to meet the project purpose-and-need. The scope is tied to realistic cost estimates and schedules. Ultimately the alternative recommended for programming or the proposal from an external entity must have a high probability of obtaining the various approvals required during the project development process. It is essential that all work incidental to the project be identified and included in the cost estimate. Examples of incidental work may be safety elements, upgrades, mitigation, and rehabilitation of existing features.

Project sponsor – secures funding for the project and serves as the project advocate. The project sponsor chooses an implementing agency for each project component and is the customer of the implementing agency. Caltrans is the sponsor for all projects funded solely from the SHOPP and most projects funded from the Interregional Improvement Program.

Purpose-and-need statement – a statement of the transportation problem that will be met by the construction of the project. The statement has two major components:

- Need – States the transportation deficiency.
- Purpose – States the objectives that will be met to address the transportation deficiency.

Project study report (PSR) – a type of PID. The PSR is a format that meets statutory, California Transportation Commission (CTC), and Caltrans requirements for STIP candidate projects. The PSR format is the model for other PIDs.

Projects-funded-by-others – projects that are sponsored by a local agency or private developer, and do not use any funds that are programmed into the STIP or SHOPP.

Scope approval – indicates agreement between the project sponsor and Caltrans, as owner-operator of the State Highway System, of the following:

1. The purpose-and-need statement of the project, and
2. Range of alternatives and their associated risks to be studied during the Project Approval and Environmental document (PA&ED) phase.

With scope approval, the sponsor may proceed with the formal studies. Scope approval is not final approval of a project alternative.

Support – the personnel costs of performing project work.

Transportation planning –

1. A continuing, comprehensive, and collaborative process that helps identify current and future transportation deficiencies, and that provides recommendations to meet mobility goals, or
2. The district unit that performs transportation planning.

ARTICLE 2 Laws

General

By way of legislation, the Legislature provides Caltrans and the CTC with its expectations for managing projects on the State Highway System. This section lists key laws that apply to the project initiation process. Although much of the legislation specifically addresses the requirements for the STIP, Caltrans has incorporated similar procedures for scoping and managing the SHOPP.

California Statutes

California Government Code, Section 65086.5

Section 65086.5 describes Caltrans' role with respect to the preparation, review, and approval of PIDs. The text is as follows:

> (a) To the extent that the work does not jeopardize the delivery of the projects in the adopted state transportation improvement program, the Department of Transportation may prepare a project studies report for capacity-increasing state highway projects that are not included in the state transportation improvement program. Preparation of the project studies report shall be limited by the resources available to the department for that work, supplemented, as appropriate, by regional or local resources. The project studies report shall include the project-related factors of limits, description, scope, costs, and the amount of time needed for initiating construction.
>
> (b) Whenever project studies reports are performed by an entity other than the Department of Transportation, the department shall review and approve the report.
>
> (c) The Department of Transportation may be requested to prepare a project studies report for a capacity-increasing state highway project which is being proposed for inclusion in a future state transportation improvement program. The department shall have 30 days to determine whether it can complete the requested report in a timely fashion. If the department determines that it cannot complete the report in a timely fashion, the requesting entity may prepare the report. Upon submission of a project studies report to the department by the entity, the department shall complete its review and provide its comments to that entity within 60 days from the date of submission. The department shall complete its review and final determination of a report which has been revised to address the department's comments within 30 days following submission of the revised report.

> (d) The Department of Transportation, in consultation with representatives of cities, counties, and regional transportation planning agencies, shall prepare draft guidelines for the preparation of project studies reports by all entities. The guidelines shall address the development of reliable cost estimates. The department shall submit the draft guidelines to the California Transportation Commission not later than July 1, 1991. The commission shall adopt the final guidelines not later than October 1, 1991. Guidelines adopted by the commission shall apply only to project studies reports commenced after October 1, 1991.

California Government Code, Section 14526(c)

Section 14526(c) states:

> (c) Projects may not be included in the draft interregional transportation improvement program without a project study report or major investment study.

California Government Code, Section 14527(g)

Section 14527(g) states:

> (g) Projects may not be included in the regional transportation improvement program without a complete project study report or, for a project that is not on a state highway, a project study report equivalent or major investment study.

California Government Code, Section 14529

Section 14529 establishes the STIP as a resource management document. The statute requires that each project in the STIP identify the allocation or expenditure amount and year for the following four components:

> (1) Completion of all permits and environmental studies.
>
> (2) Preparation of plans, specifications, and estimates.
>
> (3) The acquisition of rights-of-way, including, but not limited to, support activities.
>
> (4) Construction and construction management and engineering, including surveys and inspection.

Additionally, funding for right-of-way acquisition and construction for a project may be included in the program only if the commission makes a finding that the sponsoring agency will complete the environmental process and can proceed with

right-of-way acquisition or construction within the five-year period. No allocation for right-of-way acquisition or construction shall be made until the completion of the environmental studies and the selection of a preferred alternative.

California Government Code, Section 14530.1

Section 14530.1 requires the California Transportation Commission to adopt guidelines for the development of the STIP.

ARTICLE 3 Policies

General

Projects shall be adequately scoped prior to approval for funding. The basis for scope, cost, and schedule shall be documented in a PID for all major projects on the State Highway System. The District Director is not authorized to approve a PID unless all alternatives are considered geometrically feasible for study as described in Chapter 21 – Exceptions to Design Standards. To ensure feasibility, PIDs will have a full explanation and declaration of the risks of the project.

State Transportation Improvement Program

A PSR or PSR-PDS shall be approved by the District Director prior to listing any project in the STIP.

The *CTC STIP Guidelines* state that for each project proposed for programming in the Regional Transportation Improvement Program (RTIP) or the Interregional Transportation Improvement Program (ITIP), the PID shall list costs separately for each of four project components. In addition, right-of-way and construction components on Caltrans projects shall be further broken down into the costs for Caltrans capital outlay support and capital outlay project. Therefore, a total of six project cost components are required in a PID for projects on the State Highway System to be programmed in the Regional Transportation Improvement Program or Interregional Transportation Improvement Program. The STIP components relate to the programming phases as follows in Figure 9-1:

Figure 9-1 State Transportation Improvement Program Components and Corresponding Project Development Programming Phases

California Transportation Commission State Transportation Improvement Program Components	Corresponding Project Development Programming Phases
Support costs for environmental studies and permits	Project Approval and Environmental Document (PA&ED)
Support costs for preparation of plans, specifications, and estimates	Plans, Specifications, and Estimates (PS&E)
Support costs for right-of-way acquisition	Right-of-Way – Support
Capital costs for acquisition of right-of-way	Right-of-Way – Capital
Support costs for construction	Construction Project – Support
Capital costs for construction	Construction Project – Capital

Legislation requires that each STIP component, as identified in Figure 9-1, must be programmed and that the components may be programmed sequentially. To implement the legislation, Caltrans developed the PSR-PDS template to program support costs and capital costs separately. The PSR-PDS allows Caltrans and local agencies to:

1. Program only the support costs if the project life-cycle is longer than the STIP programming period.
2. Maximize the use of finite PID resources by beginning detailed environmental studies and engineering studies without performing preliminary studies.
3. Proceed with engineering and environmental studies and evaluate the merits and feasibility of alternatives before a preferred alternative is selected for programming right-of-way and construction costs.
4. Accurately plan resources needed to complete the environmental document - project approval process.
5. To advance the programming of PA&ED elements of future STIP projects, if there are adequate funds in the State Highway Account.

It is Caltrans policy that a PSR-PDS shall be completed prior to listing any project in the STIP.

This policy was implemented to ensure appropriate use of limited PID resources and that project teams have sufficient information on project alternatives to develop reliable costs and schedules prior to programming funds necessary for construction and the purchase of right-of-way. The information needed to firmly establish permit, right-of-way, and environmental requirements is generally not available until after the detailed studies are completed.

If a STIP project can be accelerated and construction can begin during the proposed STIP programming period, it may be appropriate to use the PSR format and program right-of-way and construction dollars at the end of the PID phase. Only a District Director with a request from a project sponsor can approve the use of the PSR format. Districts should work with their local partners to carefully consider the ability to deliver the project within the STIP programming period. When using the PSR format, districts must submit a "Fact Sheet Exception to the PSR-PDS Requirement" to the Chief of the Headquarters Division of Project Management and Chief of Office of Program and Project Planning within the Headquarters Division of Transportation Planning. A copy of the fact sheet is located at:
http://www.dot.ca.gov/hq/tpp/offices/opsc/psr-pds_guidance.html

When a District Director approves a PID, that action approves the project as a candidate project but does not ensure that the candidate will successfully compete with other projects for programming.

When a PSR-PDS is used to initiate the project, a project report (PR) will be used to program the remaining support, right-of-way, and construction costs. In some rare cases, a supplemental PID following the format of a PSR may be used.

Refer to Appendix L – Preparation Guidelines for Project Study Report and Appendix S – Preparation Guidelines for Project Study Report-Project Development Support Project Initiation Document for more information.

This chapter, Appendix L and Appendix S were developed to be consistent with the *CTC Guidelines for the Preparation of Project Study Reports.*

State Highway Operation and Protection Program

Caltrans requires development of a PID prior to:

1. Inclusion of a project's capital right-of-way and construction costs into the SHOPP, or
2. Approval to commence work on the PA&ED phase when the timetable for the project exceeds the SHOPP programming period. In this case, the PR, not the PID will program the capital right-of-way and construction costs.

The Headquarters SHOPP program managers establish the PID formats used. Refer to Figure 9-3 in Article 4 for a list of the appropriate PID format for each program in the SHOPP.

All SHOPP projects must include a list of project outputs in the PID. Contact the individual Headquarters SHOPP program manager for the most current SHOPP project output format. The Headquarters SHOPP program manager organizational chart is located at:
http://10.56.3.8/pirs/TenYrShopp/SHOPP_programs_and_managers.pdf

For further discussion of SHOPP PIDs see Article 4 – Essential Procedures and Article 5 – Additional State Highway Operation and Protection Program Procedures.

Protection of Public Investment

It is Caltrans' responsibility to protect the public's investment in the State Highway System; therefore a PID is required for any major project that is on the State Highway System regardless of the funding.

Whether Caltrans or entities other than Caltrans staff prepare the PID, Caltrans policy and procedures must be followed. Caltrans staff shall perform independent quality assurance and shall retain approval authority over those PIDs that are prepared by other entities. Further discussion of projects-funded-by-others can be found in the Article 4 – Essential Procedures and Article 8 – Project Initiation Process for Projects-funded-by-others section of this chapter.

ARTICLE 4 Essential Procedures

General

This article is a discussion of the essential procedures to complete a PID. They follow the order for common problem solving steps, project selection, project personnel, project statement, alternative development, mandatory reviews, estimating resource needs, securing funds, and starting capital work.

Project Selection

District Directors have discretion in prioritizing district projects for PID development. They also have the responsibility to ensure that the projects are consistent with planning procedures and programming criteria. District Directors have authority to approve PIDs.

Annually, the districts identify projects that will require resources to develop PIDs. A list of proposed projects is submitted to the Headquarters Division of Transportation

Planning, Office of Program and Project Planning, in the form of a proposed work program. Constrained by the budgeted PID support allocation, an annual PID work program includes a list of those PIDs that will be developed by district/region staff and a list of projects requiring independent quality assurance. Work can commence on a PID when a K-phase expenditure authorization (EA) has been issued. The PID work program is managed by the Office of Program and Project Planning. Refer to the Office of Program and Project Planning for information about work program development and K-phase authorizations.

Except for district Minor projects, the costs of the PID preparation should be charged to K-phase EA. The K-phase is used until the project is programmed, or for a project-funded-by-others when the Caltrans project manager requests the capital EA.

Candidate Projects for the State Transportation Improvement Program

The CTC and Caltrans are required to program, budget, and expend the funds in the State Highway Account in accordance with long-range transportation planning. Figure 9-2 provides an overview of the transition from long-range transportation planning to a project's initiation and ending with the programming of funds for a project. This chapter does not contain a discussion of all of the long-range planning elements shown in the Figure 9-2, however the graphic establishes the relationship between district system planning (in brown oval) and regional transportation planning (in green oval) and how long-range planning processes influence the selection of projects for funding. The following paragraphs provide brief descriptions of district system planning and regional transportation planning. A brief description of the STIP and the federal programming process follows the discussion of transportation planning processes. The PID is the key point of linkage between planning and programming.

Figure 9-2 Project Initiation Links Planning to Programming

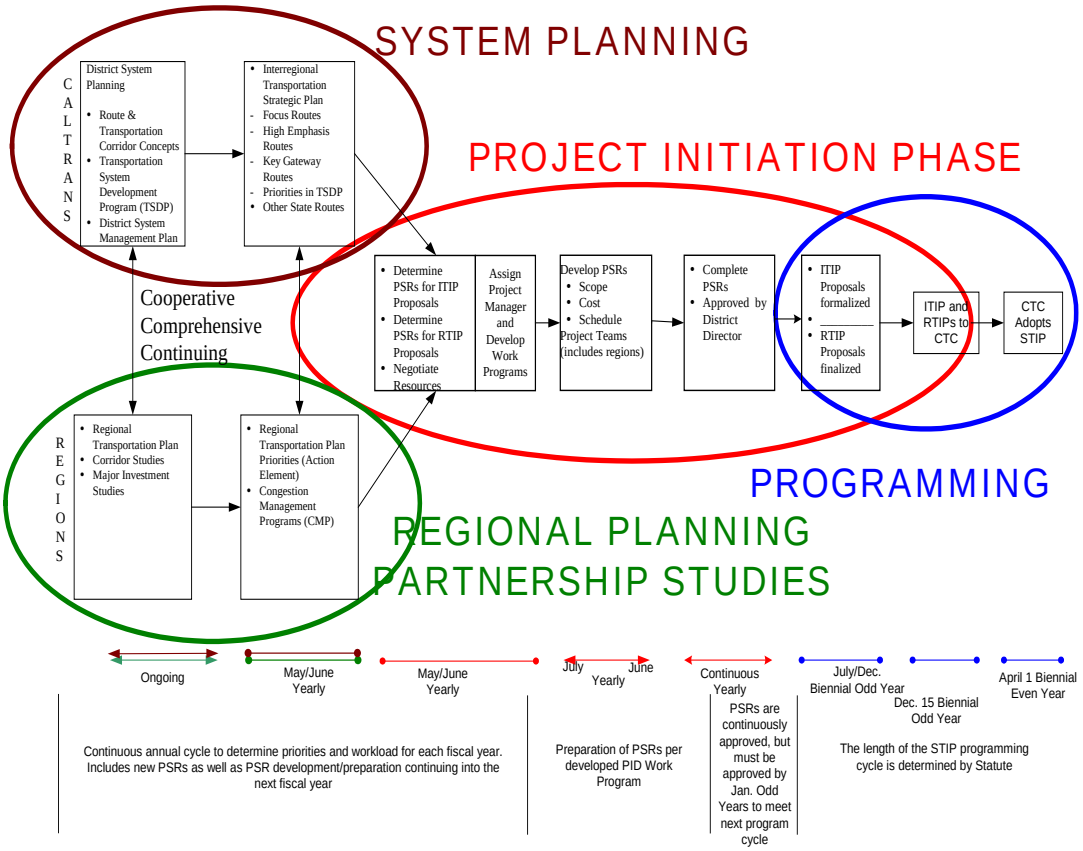

District System Planning

California Government Code, Section 65086 specifies that Caltrans shall carry out long-term State Highway System planning to identify future highway improvements in consultation with transportation planning agencies, county transportation commissions, and counties and cities. Caltrans district planning units work with local and regional agencies to identify long-range system and corridor needs. The system needs are determined by evaluating:

- Existing transportation facilities, including multi-modal transit, pedestrian and bicycle facilities.
- Existing and future deficiencies based on transportation system performance measures.

- Present operating conditions, such as the annual average daily traffic (AADT), peak hour volume, and level of service (LOS).
- Pedestrian needs at controlled and uncontrolled crosswalks.
- Current land use.
- 20-year concept for land use, operational trends, and modal trends.

Information is compiled into a transportation concept report (TCR) or a route concept report (RCR). Project selection is based on the system plans and broader statewide planning efforts such as the Interregional Transportation Strategic Plan (ITSP) and the overall policy framework established by the California Transportation Plan.

For a more in-depth discussion of this topic see Chapter 1 – Introduction, Section 4 – Transportation Planning Leads to Project Development.

Regional Transportation Plans

Like system planning within Caltrans, the Metropolitan Planning Organizations (MPOs) and Regional Transportation Planning Agencies (RTPAs) perform analyses on multi-modal segments, corridors, and the system to identify projects for long-range transportation plans. The long-range plans that are prepared and cyclically updated by Metropolitan Planning Organizations and Regional Transportation Planning Agencies are known as regional transportation plans (RTPs). Regional transportation plans consist of policy, action, and financial elements, all leading to identification of projects. Regional transportation plans are federally mandated plans. Any project that receives federal funding must be in a long-range plan that is fiscally constrained and is consistent with the goals and guidelines of a regional air quality plan.

For a more in-depth discussion of this topic see Chapter 1 – Introduction, Section 4 – Transportation Planning Leads to Project Development.

State Transportation Improvement Program

Transportation programming is the public decision-making process that sets priorities, balances system performance outcomes, and funds projects envisioned in the long-range transportation plans. The STIP consists of two broad programs: (1) the Interregional Transportation Improvement Program that is funded from 25 percent of the new funds in the STIP and (2) the Regional Transportation Improvement Program that is funded from 75 percent of the new funds in the STIP. Caltrans submits the Interregional Transportation Improvement Program and Regional Transportation

Planning Agencies submit the Regional Transportation Improvement Program to the CTC biennially. The CTC is responsible for adoption of the STIP.

The PID provides the required information that transforms transportation planning activities to project specific details for programming decisions. The district transportation planning unit has a key role in ensuring that the community needs and long-term transportation objectives are incorporated into the PIDs.

An approved PSR-PDS will be used to program only the "environmental document and permit" component for any STIP project. An approved PR will be used to program STIP support and capital components for right-of-way and construction. With the approval of the Headquarters Division of Transportation Programming, and if there is sufficient detail to firmly establish permit requirements, right-of-way requirements, and environmental impacts, a PSR may be used to program the right-of-way and construction components prior to approval of the PR.

For additional information on the requirements of the STIP, see: http://www.dot.ca.gov/hq/transprog/ocip.htm.

Federal Program

Projects receiving federal transportation funds or are of regional significance must be programmed in the appropriate federal programming document. Metropolitan Planning Organizations are responsible for developing and adopting the Federal Transportation Improvement Program's. Caltrans is responsible for preparing the Federal Statewide Transportation Improvement Program.

Refer to Chapter 4 – Programming, for additional information on federal programs.

Candidate Projects for the State Highway Operation and Protection Program

The CTC and Caltrans program, budget, and expend the funds in the State Highway Account in accordance with the *2015 Ten-Year State Highway Operation and Protection Program Plan (SHOPP Plan)*.

Ten-Year State Highway Operation and Protection Program Plan

California Streets and Highways Code, Section 164.6 requires that Caltrans prepare a 10-year rehabilitation plan for the rehabilitation and reconstruction, or the combination thereof, of all State highways and bridges owned by the State. The plan

shall include specific milestones and quantifiable accomplishments, such as miles of highways to be repaved and number of bridges to be retrofitted. The plan is updated every two years and is submitted to the CTC for review and comment prior to submittal to the Governor and Legislature.

The plan, known as the *2015 Ten-Year State Highway Operation and Protection Program Plan (SHOPP Plan)*, contains a compilation of statewide needs, performance goals, and a long-term schedule for meeting the goals. The plan is a tool to identify funding needs and prioritize projects within funding constraints.

The *2015 Ten-Year State Highway Operation and Protection Program Plan (SHOPP Plan)* has the following major categories:

- Major Damage Restoration
- Collision Reduction
- Bridge Preservation
- Roadway Preservation
- Roadside Preservation
- Mandates
- Mobility Improvement
- Facility Improvement

The Headquarters SHOPP program managers work with the districts to develop the *2015 Ten-Year State Highway Operation and Protection Program Plan (SHOPP Plan)*. Biennially, each district is assigned district program target goals for the statewide *2015 Ten-Year State Highway Operation and Protection Program Plan (SHOPP Plan)*. The district uses this information to identify specific projects that contribute to meeting the district's target goals. If a district has identified program needs that are not within the prescribed goals, that district may provide justification for including the project as part of the district's submittal. The district's list is submitted to the Headquarters SHOPP program managers. Once approved by the Headquarters SHOPP program managers, the district's projects are added to the statewide *2015 Ten-Year State Highway Operation and Protection Program Plan (SHOPP Plan)*.

State Highway Operation and Protection Program

Biennially, Caltrans submits a list of projects to the CTC that meets the goals of the SHOPP. The SHOPP is a list of projects that has been approved for delivery by the

CTC for the four-year SHOPP timeframe. The Caltrans delivery commitment is defined by the scope, cost, and schedule presented by the PID. The program categories in the SHOPP are an extension of the program categories in the *2015 Ten-Year State Highway Operation and Protection Program Plan (SHOPP Plan)*. A description of the program qualifications for each category is located at: http://onramp.dot.ca.gov/hq/maint/SHOPP/SHOPP_Decision.shtml

Projects are selected from the *2015 Ten-Year State Highway Operation and Protection Program Plan (SHOPP Plan)* and the districts/regions are resourced for PID development through the PID work program. The PID defines the project scope, cost, and schedule. The project competes with other SHOPP needs for inclusion in the SHOPP. The PID provides the decision-making link between the *2015 Ten-Year State Highway Operation and Protection Program Plan (SHOPP Plan)* and commitment for the delivery of capital improvement through the SHOPP.

Federal Program

SHOPP projects that either receive federal funds or are regionally significant must be programmed into the Federal Transportation Improvement Program. Projects that need to be in the region's air quality conformity model must be programmed in the Federal Transportation Improvement Program. Refer to Chapter 4 – Programming, for additional information on federal programs.

Project Initiation Document Templates

The funding source, the complexity, the issues, and the type of work will determine what type of information must be included in the PID.

The appendices provide guidance and templates for various PIDs.

Appendix L – Preparation Guidelines for Project Study Report, provides basic information applicable to all PIDs and should be read in conjunction with any of the program-specific appendices. Appendix L includes the following information:

- Preparation guidelines.
- Description of information that should be included in a PSR.
- Scoping tools.
- Standard templates.

Appendix S – Preparation Guidelines for Project Study Report-Project Development Support Project Initiation Document provides information applicable to a PSR-PDS, including the template and should be read in conjunction with Appendix L. Appendix S includes the following information:

- Preparation guidelines.
- Description of information that should be included in a PSR-PDS.
- Scoping tools.
- Standard templates.

The PSR and PSR-PDS are the most common documents to initiate a project. A standard outline has been developed for these documents. Templates using these standard outlines and some fill-in-the-blank tables have been developed for the PSR and PSR-PDS.

In addition to the PSR, there are modified templates that have been tailored to meet the information needs of specific State programs or funding sponsors. Tables from any of specialty PIDs may be used to improve the presentation of project information.

State Transportation Improvement Program Projects

There are two major PID types that are used to program projects into the STIP.

- The PSR-PDS is used only to program the support costs needed to achieve project approval.

- The PSR is used to program all support, right-of-way acquisition, and construction costs.

Both the PSR and PSR-PDS use a similar outline, however, the PSR-PDS does not require the same level of engineering detail as a PSR. The level of engineering detail and effort for developing a PSR-PDS shall be limited to that effort needed to develop the work plan for the PA&ED phase, and to develop a “ballpark” estimate of the construction cost. When using a PSR-PDS, careful consideration of resources needed to complete the PA&ED phase is warranted since the level of information in the PSR-PDS is substantially less than the level of information required in a PSR. In addition, certain project approvals may need to be obtained during the PA&ED phase that would normally be done during the project initiation phase, such as any needed Federal Highway Administration (FHWA) approvals. The construction estimate in a

PSR-PDS is not a programming commitment; rather it is used to forecast long-range funding needs.

A project programming request (PPR) as described in the STIP Guidelines shall be included as an attachment. The template for this request is located on the Headquarters Division of Transportation Programming website at: http://www.dot.ca.gov/hq/transprog/ocip.htm

State Highway Operation and Protection Program Projects

Caltrans has developed fill-in-the-blank type PID templates for specific programs in the SHOPP to fulfill either urgency needs, such as emergency projects, or for programs that have well defined purpose-and-need and project scope. In the cases where solutions are not complex, activities during the project initiation phase are often sufficient to meet both the requirements for a PID and a PR. In addition, there may be programs that have specific PID requirements that must be incorporated into the document. Each specialty template contains a modified cost estimate table tailored for the specific program. Figure 9-3 identifies the appropriate template for each program in the SHOPP. In addition, Article 5 – Additional State Highway Operation and Protection Program Procedures, discusses specific requirements for SHOPP projects.

As discussed in “Project Selection” of this article, projects for the SHOPP are planned and selected based on meeting program specific qualifications. A description of the program qualifications can be obtained from the Headquarters SHOPP program manager.

Figure 9-3 Project Initiation Document Templates for the State Highway Operation and Protection Program

PROGRAM[1]	ACCOUNTING CODE[1]	TYPE OF PROJECT INITIATION DOCUMENT[2]	REFERENCES TO OTHER CHAPTERS AND APPENDICES
Major Damage Restoration			
Major Damage (Emergency Opening)	20.XX.201.130	DO/DAF[3]	
Major Damage (Permanent Restoration)	20.XX.201.131	DAF[4], SCVP, PSR-PR or PSR	Appendices R, A & L
Roadway Protective Betterments	20.XX.201.150	PSR	Appendix L
Collision Reduction			
Safety Improvements	20.XX.201.010	PSR-PR[5], PSR, or SCVP	Appendices A, L & R
Collision Severity Reduction	20.XX.201.015	PSR or SCVP	Appendices L & R
Bridge Preservation			
Bridge Rehabilitation	20.XX.201.110	PSSR or PSR	Appendices P & L
Bridge Scour Mitigation	20.XX.201.111	PSSR or PSR	Appendices P & L
Bridge Rail Replacement and Upgrade	20.XX.201.112	PSSR, SCVP or PSR	Appendices P, R & L
Bridge Seismic Restoration	20.XX.201.113	PSSR or PSR	Appendices P & L
Capital Bridge Preventative Maintenance Program	20.XX.201.119	PSSR	Appendices T & L
Transportation Permit Requirements for Bridges	20.XX.201.322	PSSR or PSR	Appendices P & L
Roadway Preservation			
Roadway Rehabilitation 3R – DIB 79	20.XX.201.120	PSSR or PSR	Appendix G & L
Pavement Rehabilitation – DIB 81	20.XX.201.121	CAPM-PR	Appendix H
Pavement Preservation 2R – DIB 79-03	20.XX.201.122	PSSR or PSR	Appendix G & L
Long-Life Pavement Rehabilitation	20.XX.201.125	PSR	Appendix L
Drainage System Restoration	20.XX.201.151	PSR	Appendix L
Signs and Lighting Rehabilitation	20.XX.201.170	PSR or SCVP	Appendices L & R
Roadside Preservation			
Roadside Rehabilitation	20.XX.201.210	PSR Data Sheet HPR	Chapter 29, Appendix E
New Highway Planting	20.XX.201.220	Contact SHOPP Program Manager	Chapter 29, Appendix E
Roadside Safety Improvements	20.XX.201.235	PSSR or SCVP	Appendix Q & R
Roadside Protection and Restoration	20.XX.201.240	PSR	Chapter 29, Appendix L
Safety Roadside Rest Area Rehabilitation	20.XX.201.250	PSR	Chapter 29, Appendix X
New Safety Roadside Rest Areas	20.XX.201.260	PSR	Chapter 29, Appendix X
Mandates			
Relinquishments	20.XX.201.160	PSSR	Appendix G
Railroad/Highway At-Grade Crossing	20.XX.201.325	PSR or SCVP	Appendix L & R
Hazardous Waste Mitigation	20.XX.201.330	PSR	Appendix L
Storm Water Mitigation	20.XX.201.335	PSR	Appendix L

PROGRAM[1]	ACCOUNTING CODE[1]	TYPE OF PROJECT INITIATION DOCUMENT[2]	REFERENCES TO OTHER CHAPTERS AND APPENDICES
ADA Curb Ramps	20.XX.201.361	PSR or SCVP	Appendices L & R
ADA Pedestrian Infrastructure	20.XX.201.378	PSR or SCVP	Appendices L & R
Mobility			
Operational Improvements	20.XX.201.310	PSR	Appendix L
Transportation Management Systems	20.XX.201.315	PSR	Appendix L
Weigh Stations & Weigh-In-Motion Facilities	20.XX.201.321	PSR	Appendix L
Facilities			
Equipment Facilities	20.XX.201.351	Facility PSR	Chapter 32, Appendices C & L
Maintenance Facilities	20.XX.201.352	Facility PSR	Chapter 32, Appendices C & L, *Maintenance Station Design Manual*
Office Buildings	20.XX.201.353	Facility PSR	Chapter 32, Appendices C & L
Materials Labs	20.XX.201.354	Facility PSR	Chapter 32, Appendices C & L

DAF	Damage Assessment Form
DO	Director's Order
PSR	Project Study Report
PSR-PR	Project Study Report-Project Report
SCVP	Small Capital Value Projects
PSSR	Project Scope Summary Report
CAPM-PR	Capital Preventive Maintenance Project Report
PSR Data Sheet HPR	Project Study Report Data Sheet Highway Planting Restoration

Footnotes:

1. The program names and accounting codes are from the *Coding Manual*. See the Headquarters Division of Maintenance-SHOPP website for a description of each SHOPP program.
2. The project initiation document for the Minor B program is an EA-PR and the project initiation document for the Minor A program is a PR.
3. The Director's Order with a DAF is used for initiation, programming and approval of projects in the Major Damage (Emergency Opening) Program as discussed in Article 5, Sub-article "Damage Assessment Form." Contact the Major Damage Restoration Program Manager in the Headquarters Division of Maintenance for instructions.
4. The DAF is used for initiation, programming and approval of projects in the Major Damage (Permanent Restoration) Program subject to the conditions enumerated in Article 5, Sub-article "Damage Assessment Form." When the complexity of the project exceeds the conditions for using the DAF, the SCVP format, PSR-PR, or PSR will be used for project initiation with the DAF as an attachment, followed by a PR for project approval as needed.
5. If a Safety Improvement project exceeds the $3,000,000 combined capital and support cost threshold or is not eligible to use the SCVP format as determined by the Safety Improvements Program Manager, use the PSR-PR format. If the complexity of the project exceeds the conditions for using the PSR-PR format, the district safety coordinator can grant an exception to use the PSR format.

Small Capital Value State Highway Operation and Protection Program Projects

The small capital value projects (SCVP) PID was developed to minimize the effort needed to program projects, equivalent to Minor A projects, using SHOPP Reservation funds. The Headquarters SHOPP program managers have expanded the use of the SCVP PID; it is now the standard PID for SHOPP projects with a total combined capital and support cost of $3,000,000 or less, but more than the Minor B contract limit.

Use of the SCVP PID template should be based on project specific risks, constraints, and complexities when planning, scoping, and programming SCVP. The SCVP PID must provide Headquarters SHOPP program managers with sufficient information about the project's purpose-and-need, scope, cost, and schedule to make sound a programming commitment. Note that the SCVP PID does not provide conceptual approval of the project because of the simplicity of the report format. The project engineer should discuss any issues with the appropriate Headquarters SHOPP program manager.

While SCVP are typically low risk and single alternative projects, the district has discretion to choose another type of PID to scope a project for programming commitments when a small capital value project is too complex and presents funding or scheduling risks. The determination to use a different type of PID does not require approval from the Headquarters SHOPP program managers or Office of Program and Project Planning, but discussion with the Headquarters SHOPP program managers is recommended.

Upon completion and approval of the SCVP PID, projects will be amended into the SHOPP and receive a planning program number (PPNO).

See Appendix R – Small Capital Value Projects Project Initiation Document for an outline for SCVP PIDs.

State Highway Operation and Protection Program Minor A Projects

The Minor A project construction cost limit is defined by the CTC in terms of State (including federal) funds used.

The Minor Program allows districts to be responsive to low cost transportation needs, and therefore, Minor Program projects are not individually programmed.

Projects originally conceived as minor projects that have increased in cost to exceed the limit for Minor A projects must be reviewed by the Headquarters SHOPP program manager and compete with other candidates for SHOPP funds.

Under special circumstances, local funds may be combined with SHOPP funds (for example: a local project and a SHOPP project are combined for either construction efficiencies or coordination). In this case the local funds are not included in the calculation to determine if the construction cost exceeds the minor limit.

The PR functions as the initiation document and the project approval for projects that meet the Minor A limit. Refer to Appendix K – Preparation Guidelines for Project Report for an outline and preparation guidelines for project reports.

Contact the Headquarters SHOPP Minor Program program manager for the most current Minor A limit.

State Highway Operation and Protection Program Minor B Projects

The Minor B level is established to be consistent with the lower limit of the State Contract Act which is reviewed each even numbered year by the Department of Finance.

Contact the Headquarters SHOPP Minor Program program manager for the most current Minor B limit.

An expenditure authorization-project report (EA-PR) facilitates opening an EA and serves as the PR for a Minor B project. Refer to Article 7 of this chapter and Appendix B – Preparation Guidelines for Expenditure Authorization Project Report for additional information.

Projects-funded-by-others

Projects-funded-by-others will require an encroachment permit and either a permit engineering evaluation report (PEER) or a PID using the PSR-PDS template. Projects that have State Highway Account funds, as well as funds from other sponsors, will follow the Project Development Procedures Manual (PDPM) procedures and meet the expectations of the program manager. See Article 8 – Project Initiation Process for Projects-funded-by-others of this chapter for further information.

Purpose and Need - Defining the Transportation Problem

All PIDs shall contain a statement of purpose-and-need for the transportation improvement. This statement of purpose-and-need must be based on needs and objectives identified in the planning process. The statement should be developed by and have the consensus of the project sponsor and members of the PDT. The PID must present information in an organized manner to support the purpose-and-need statement. Supporting information to the purpose-and-need statement includes the background of the transportation problem, system and corridor planning, and data on transportation deficiencies that validate the need for the project.

A clear, well-justified purpose-and-need statement explains to the public and decision makers that the expenditure of funds is necessary and worthwhile, and that the priority of the project, relative to other transportation needs, is warranted. The purpose-and-need statement is the foundation of any project regardless of the funding source. The purpose-and-need drives the process for consideration of the range of alternatives to be studied, the analysis, and ultimate selection. The statement should be written so that the consequences of the No Build Alternative are self-evident.

A project "need" is an identified transportation deficiency. Typical transportation deficiencies are related to safety, congestion relief, connectivity of the highway system, multi-modal connectivity, access, operation, facility preservation, and legal mandates. A need must be supported by evidence that a problem exists.

A project's "purpose" is the objectives that will be met to address the transportation deficiency. Objectives should be quantified during the project initiation phase and measures should be used to develop, evaluate, and compare reasonable solutions.

The project's purpose-and-need statement must be as comprehensive and as specific as possible. Establishment of the appropriate breadth for the purpose-and-need promotes a suitable range of alternatives. If a statement is too vague, such as "provide a connection between city A and city B," then the range of alternatives could be very broad. The previous statement could imply that alternatives for air transportation be considered when that alternative may be outside of the funding criteria. On the other hand, the purpose-and-need statements must not be so narrow that it precludes studying reasonable alternatives that meet the underlying need.

The purpose statement should clearly describe both planned expectations for the State's transportation system and sponsor's goals. An example of providing

specificity is to include a statement that identifies the purpose as "completion of the California Freeway and Expressway portion of a route for interregional truck traffic with a connection to the existing rail system and to improve the level of service." This is a positive statement (compared to "provide a connection between cities A & B") that addresses a specific need for truck traffic capacity, the continuity with the freight system and an unacceptable level of service.

The purpose-and-need statement may need to be refined, as appropriate, until approval of the project. A key factor in the refinement of a purpose-and-need statement is the participation of a broad range of Caltrans functional units, community representatives, and public stakeholders. As information is gathered about the project and corridor, one may find more information about the underlying cause of a problem. For example, it may be assumed that the cause of congestion is the commuter traffic to and from the downtown area; however, follow-up studies indicate that additional housing also generates numerous trips to and from the university within a specific segment of the commuter corridor. New information may lead to a refinement of the purpose-and-need statement so that it can include the improved connectivity to transit, pedestrians, and bicycles in the corridor.

The final design reflected in the construction documents and any modification to the design during construction must be consistent with the approved purpose-and-need of the project.

Additional information and resources on purpose-and-need statement development is located at: http://www.dot.ca.gov/hq/env/emo/purpose_need.htm.

The project scope may be refined as the project progresses through to project approval. The project scope shall remain consistent with the purpose-and-need of the project. Any changes to the programmed project scope will require a project change request (PCR) and supporting engineering documentation. A program change request alone is not sufficient to adequately document the engineering decision to change the scope of a project and provide for design immunity protection in tort liability. Additional information on scope changes can be found in Chapter 6 – Project Cost, Scope, and Schedule Changes.

Design Concept and Design Scope

The PDT must establish consensus on the design concept and the design scope.

Design Concept

The design concept defines the type of highway project; such as, freeway, expressway, conventional highway, major arterial, or mixed highway-rail transit facility. For highway facilities this is refined to freeway, expressway, or conventional highway. The design concept is an updated and more refined version of the planning concept developed during the system and regional planning process.

The establishment of the design concept will include a review of the transportation concept report or a route concept report, existing route adoption documents, and freeway agreements. In addition, an evaluation of general plans, current land uses, and intergovernmental reviews of proposed developments should be performed to determine the appropriate design concept.

The development of the design concept shall reflect the appropriate functional classification of the facility as it relates to the transportation objectives of the corridor. To assess the appropriate functional classification one must consider the following questions:

- Does this facility serve a rural, urban, or urbanizing area?
- Does the facility primarily serve inter-regional, intra-regional, or intra-community travel?
- Does the facility provide system continuity?

Design Scope

The design scope describes aspects of the project that meet the project purpose-and-need. The design scope is an update of the planning scope that is used to assess how the project will impact the regional air quality emissions. Some of the features that relate to the people or vehicle carrying capacity of the facility and therefore may impact air quality include:

- The number of lanes including lanes for high-occupancy vehicle, pockets, and through lanes.
- The location and length of the project.
- Design standards.
- Right-of-way requirements.

- Interchange locations.

Examples of where the design scope may be considered neutral with respect to impact on air quality include:

- Pavement rehabilitation.
- Highway planting requirements.
- Roadside management features.
- Stormwater management requirements.
- Seismic retrofit.

If applicable, the design scope of at least one viable alternative in the PID must match the regional transportation plan and the Federal Transportation Improvement Program project listing.

Refer to the Caltrans *Standard Environmental Reference* *(SER)* for additional guidance on project compliance with federal regulations on air quality conformity.

Scoping Tools

There are several scoping tools used by various functional areas to aid the project team in scoping the project.

Upon receiving a request for project information, each functional unit completes the appropriate scoping tool and transmits the information to the unit responsible for developing the PID.

Most scoping tools that apply to all PIDs are located in Appendix L. Scoping tools specific to the PSR-PDS are located in Appendix S. The following is a list of the scoping tools and their locations:

- Design Scoping Index (All PIDs - Appendix L).
- Stormwater Documentation (PSR-PDS only - Appendix S).
- Transportation Planning Scoping Information Sheet (All PIDs - Appendix L).
- Preliminary Traffic Engineering Assessment (PSR-PDS only - Appendix S).
- Traffic Forecasting, Analysis and Operations (PSR only - Appendix L).
- Preliminary Environmental Analysis Report (All PIDs - http://www.dot.ca.gov/ser/pear.htm).
- Right-of-Way Component for PSR-PDS (PSR-PDS only - Appendix S).
  - Conceptual Cost Estimate Request.

  - Conceptual Cost Estimate.
- PSR-PDS Survey Mapping Needs for PSR-PDS Questionnaire (PSR-PDS only - Appendix S).
- Project Quality Control Plan (PSR-PDS only - Appendix S).
- Risk Register (PSR-PDS only - Appendix S).
- Division of Engineering Services Scoping Index (PSR-PDS only - Appendix S).

The tools not contained in the previous list can be obtained from the appropriate functional unit.

Project Initiation Document Alternative Formulation Strategies

The PDT shall develop viable alternative solutions that meet the project purpose-and-need. Alternatives need to be context sensitive and address other constraints such as funding. It is Caltrans' policy to evaluate alternatives that avoid, minimize, or mitigate adverse environmental impacts. In the development of alternatives, the team should consider the following:

Context Sensitive Solutions

Caltrans shall use context-sensitive-solutions (CSS) as an approach to plan, design, construct, maintain, and operate its transportation system. Steps shall be taken to ensure early recognition of the context of the facility by the PDT. Such steps promote the use of innovative and inclusive approaches to integrate and balance community aesthetic, historic, cultural, social, and other environmental values with transportation safety, maintenance, and performance goals. Context-sensitive-solutions is a collaborative, interdisciplinary approach involving all stakeholders.

The context of all projects and activities to obtain public input are key factors in reaching project decisions. Context is considered for all State transportation and support facilities when defining, developing, and evaluating options. When considering the context, address issues including funding and maintenance feasibility, traffic demand, impact on alternate routes and safety, and relevant laws, rules, and regulations.

Figure 9-4 emphasizes that State highways are located within communities and provides some examples of the features and resources that a community may value. Each community will have its own characteristic features and values attached to those

features. The PDT should work with the stakeholders to ensure these characteristics are considered when developing project alternatives.

Figure 9-4 The Context

Based on graphic created by SRF Consulting Group Inc.
University of Minnesota Center for Transportation Studies

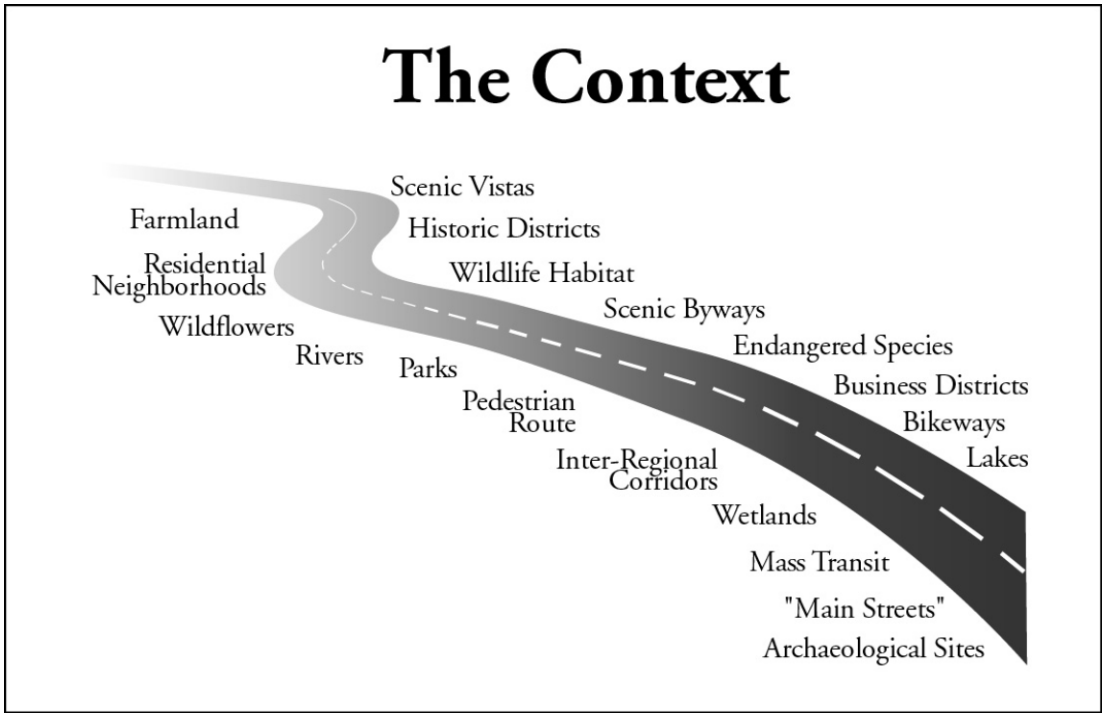

Following are a few examples of questions that help the team establish the context of the project:

- Are all stakeholders identified?
- How does the transportation system “fit” into its physical and cultural context?
- Is the highway appropriately classified?
- What are the economic values and concerns of the community?
- What are the physical characteristics of the corridor? Is it in an urban, urbanizing, or rural setting?
- Are there important view-sheds from the road?
- What type of vegetation exists along the corridor?
- Are there historic resources, animal habitats, or other environmentally sensitive features?

- Are there particular features or characteristics of the area that the community wants to change or preserve?
- How do the current traffic demands impact various users of the transportation system?
- Are pedestrian and bicycle users safely, efficiently, and comfortably accommodated? What are their needs?
- What are the transit demands?
- What are the vehicular and goods movement demands?

See Chapter 1 – Introduction, Section 5 for more information on the project development philosophy. See Chapter 22 – Community Involvement, for issues related to partnering with communities to get their input on projects as an integral part of the project development process.

See the *Highway Design Manual* *(HDM)* and *Main Street, California* for additional information on context-sensitive-solutions.

For information about developing an effective public participation plan to gain public support on a project to meet the context-sensitive-solutions goals of partnering, see Caltrans' Office of Sustainable Community Planning website at: http://www.dot.ca.gov/hq/tpp/offices/ocp/

See the *Project Communication Handbook* for information regarding assisting the project team in identifying internal and external stakeholders, and enhancing communication among all parties involved on a project.

Minimum Project Alternative

All PIDs that will compete for SHOPP or STIP funds linked to California Environmental Quality Act (CEQA) or National Environmental Policy Act (NEPA) documents need to include a minimum project alternative. This alternative must meet the project purpose-and-need. District program management unit should work with the project manager to establish a realistic funding expectation. The project manager should ensure that an alternative that fits funding constraints and addresses the most severe transportation problems outlined in the project purpose-and-need is developed.

The minimum project alternative must stand alone and must not depend on successive projects. The minimum project alternative need not contribute to the ultimate project and must not constitute a commitment to the ultimate project. A good illustration would be a corridor with an expressway as the ultimate project where significant

interim relief could be achieved with strategically located passing lanes on a conventional highway. Another example would be a desired interchange on an expressway where interim improvement could be achieved by intersection signalization.

Stageable Alternatives

Special emphasis should be placed on development of alternatives with staging characteristics. By developing alternatives with components of varying priorities, it is possible to stage the ultimate project or scale it back. The flexibility to quickly and logically adjust the scope of projects is most important at initial programming, but is necessary throughout the project development process.

Districts have a higher probability of getting a project programmed and of meeting at least some of the project needs if the PID includes stageable alternatives. Projects that may be rejected on an "all or nothing" basis are more likely to be completed over a period of years if packaged in more reasonably sized increments. A good project for such an approach would be a rehabilitation project proposed for a long corridor. To be competitive, large projects should be packaged into a series of reasonably sized projects with independent utility.

No Build Alternative

The No Build Alternative must explain the need for the project. The No Build Alternative shall always be included in the PID.

Alternative Identified to Program Project Cost

If there is more than one Build Alternative, the PDT shall identify one viable project alternative to be used to estimate and program the project cost. The project schedule should be based on the timeline needed to study all viable project alternatives. The identification of the programmable project alternative does not predetermine the identification of a preferred alternative during the environmental process.

Life-Cycle Cost Analysis

Life-cycle cost analysis shall be completed as discussed in Chapter 8 – Overview of Project Development.

Consensus on the Study Area

The study area defines the boundary for any formal study of the project alternatives. Defining the study area boundary is key to forming a systematic approach for developing and evaluating alternatives, and can prevent unexpected project rework. The boundary of the study area is derived from the purpose-and-need of the project, alternatives, and logical termini. Constraints identified in previous technical studies, legal requirements, design standards, community input, funding limitations, and natural or man-made elements assist in the delineation of the study area. Consensus on the definition of the boundary of the study areas is the responsibility of the PDT.

The boundary of the study area shall be broad enough to ensure that all the viable alternatives can be evaluated. The boundary of the study area may delineate individual alternatives or delineate one area for the development of multiple alternatives. The study area should include anticipated route detours, material haul roads, and other areas that are indirectly impacted as a result of the project. Risk management activities can be incorporated into the development of the boundary of the study area and used to effectively sequence activities. For example, if there are alternatives that have a high potential for design issues, the boundary of the study area map should identify locations that have the high risk features and flag those areas to be studied first. Early verification of high-risk elements may eliminate the need to extensively study alternatives that are ultimately not viable. Early verification of high-risk elements also ensures that adequate resources are obtained and accurate schedules are established. The boundary of the study area may be refined as information is gathered.

Identify Anticipated Environmental Determination/Document and Compliance

The preliminary environmental analysis report (PEAR) identifies the anticipated environmental determination/document, the need for preliminary environmental studies, and identification of known environmental constraints. The preliminary environmental analysis report also includes estimates of the schedule and costs associated with completing environmental compliance. The information contained in the preliminary environmental analysis report serves as the foundation for the environmental team to begin studies in the PA&ED phase, facilitating early consultation with federal and State resource agencies. For additional information regarding the preliminary environmental analysis report, see http://www.dot.ca.gov/ser/pear.htm.

Value Analysis

Currently, *Title 23 United States Code*, Section 106 requires a value engineering analysis on all federally funded National Highway System projects with a total project cost (right-of-way, construction, and support) of $50 million or more, regardless of whether Caltrans employees, local agencies, consultants, or others are accomplishing the work. In addition, a value engineering analysis is mandated on all federally funded National Highway System bridge projects with a total project cost of $40 million or more. The requirements for performing a value engineering analysis or value analysis (VA) study can be found in Chapter 19 – Value Analysis.

The PDT should establish the timing of the analysis once it has been determined that a value analysis study is appropriate and/or required. The PDT should focus on the work plan, identify the information critical for effective analysis, set a study schedule, and allocate sufficient resources for staff participation during the value analysis study.

The formal value analysis should be completed as early in the process as possible, but only after adequate information has been generated to complete a high level evaluation of various alternatives.

Ideally, value analysis is performed to analyze proposed corridor improvements prior to narrowing the suite of alternatives (or phasing of project improvements) for further development. The intent of the federal legislation is to use value analysis to identify the solution with the best value for the majority of the project stakeholders. The value analysis study provides a quantitative and qualitative assessment to compare the performance attributes and costs of competing alternatives.

Exceptions to Design Standards

During development of projects, various constraints often require deviation from design standards. Identify and document known exceptions to mandatory and advisory design standards as discussed in Chapter 21 – Exceptions to Design Standards.

Resurfacing, Restoration and Rehabilitation Projects

SHOPP projects that address resurfacing, restoration, and rehabilitation (RRR), and certain safety, storm damage, protective betterment, and operational improvement shall be consistent with the design criteria described in *Design Information Bulletin 79* – Design Guidance and Standards for Roadway Rehabilitation Projects.

Capital Preventive Maintenance Projects

Capital preventive maintenance (CAPM) projects that are consistent with the scope and intent of the capital preventive maintenance program rarely require a Fact Sheet for Exceptions to Mandatory Design Standards. All newly constructed project features are to be in conformance with current design and safety standards, policies, and practices.

For further policy and procedures on design exceptions, see Chapter 21 – Exceptions to Design Standards and Appendix BB – Fact sheets for Exceptions to Mandatory Design Standards.

Safety Review

All projects must be reviewed by the District Safety Review Committee prior to the approval of the PSR. The PID must incorporate the safety concepts that were identified during the safety review process unless deletion is substantiated, documented, and approved by the District Director. See Chapter 8 – Overview of Project Development, Section 7 and *Highway Design Manual* Index 110.8 – Safety Reviews, for more detailed information on Safety Reviews.

Constructability Review

Perform constructability reviews on all projects that exceed the Minor A project limit as defined by the CTC. The PID will summarize the results of the constructability review. See Chapter 8 – Overview of Project Development, for information on meeting constructability review requirements.

Assessment of Federal Highway Administration Involvement

Documenting Federal Involvement

All PIDs, including PSR-PDS' must be assessed to determine the level of federal involvement needed to approve the design and construction products. See the latest *Stewardship and Oversight Agreement on Project Assumption and Program Oversight* between the Federal Highway Administration, California Division and Caltrans for the project actions assumed by Caltrans and the project actions where FHWA has retained their authority as well as the detail associated with the various oversight responsibilities.

Other Types of Federal Involvement

In addition to assessing the FHWA's involvement in approval of the plans, specifications, and estimate, other project features may require the FHWA involvement or the involvement of other federal agencies. Examples of other federal agencies are: U.S. Army Corps of Engineers, U.S. Department of the Interior Bureau of Land Management, U.S. Department of the Interior Bureau of Indian Affairs and/or tribal governments, or U.S. Department of Agriculture Forest Service. Each functional unit must be involved in assessing the amount of federal involvement for their delivery product.

The PID should identify all federal required involvement.

Chapter 2 – Roles and Responsibilities, Section 7 provides the policies and guidance regarding FHWA involvement.

Federal Highway Administration Determination of Engineering and Operational Acceptability for New or Modified Access on the Interstate System

New or modified Interstate access requires approval by both Caltrans and FHWA. Obtaining FHWA approval is a two-step process. The first step in this process is obtaining FHWA Determination of Engineering and Operational Acceptability. For most projects, FHWA Determination of Engineering and Operational Acceptability is obtained during the PID phase. The second step occurs once the NEPA process is completed. FHWA will concurrently provide approval of the environmental document and Final Approval for the new or modified Interstate access.

Caltrans evaluates the project proposal for impacts on the level of service of the Interstate in terms of safety and mobility.

As discussed in Chapter 2 – Roles and Responsibilities, Caltrans shall keep the FHWA liaison engineer informed of all proposed new or modified access on the Interstate System as they are being developed.

Caltrans shall submit a formal request for a FHWA Determination of Engineering and Operational Acceptability. If the FHWA Determination of Engineering and Operational Acceptability is submitted at the PID phase, an unsigned draft PID and supporting documentation must be attached to the request. The evaluation, FHWA

Determination of Engineering and Operational Acceptability and Caltrans' conceptual approval is documented in the approved PID.

For a project that is initiated with a PID that does not provide conceptual approval, FHWA Determination of Engineering and Operational Acceptability occurs during the PA&ED phase because the level of project detail in the PID is not sufficient for FHWA to make this determination. The PID shall identify the target schedule for the FHWA Determination of Engineering and Operational Acceptability and the schedule shall be discussed with and agreed to by the FHWA liaison engineer prior to determining the target schedule. An unsigned supplemental PID or an unsigned draft project report (DPR) and supporting documentation must be attached to the request. FHWA Determination of Engineering and Operational Acceptability must be obtained prior to circulation of the draft environmental document. The evaluation, FHWA Determination of Engineering and Operational Acceptability and Caltrans' conceptual approval is documented in the approved DPR.

An unsigned PID (or other report as described previously) and the supporting documents for projects that propose new or modified interchanges shall contain sufficient information to allow FHWA to independently evaluate the request and ensure that all pertinent factors have been appropriately considered and must meet the requirements identified in Chapter 27 – New Public Road Connections.

Federal Aid Reimbursement - Local Agency Implementation

If federal dollars are used on any portion of the project and local agency support costs are considered a soft match for federal reimbursement, then the PID or PR must identify and discuss the local agency support cost.

Work Plan Development

All projects shall have work plans that describe the amount of and the schedule for Caltrans resource needs following project initiation. Work plans shall be developed with input from all appropriate functional units. The PID contains a summary of the information needed to explain the work plan (such as: assumptions, critical path activities, summary of the risk management plan). A copy of the work plan is submitted to Headquarters Division of Project Management.

For further information about the development of work plans, refer to the Headquarters Division of Project Management, Office of Project Management Application Systems.

Cooperative Features for Capital Improvements

A cooperative agreement shall be required if the PA&ED phase, or another future phase will involve the exchange of funds, effort, or materials between Caltrans and another public entity. The PID will be the authorizing document for the execution of a cooperative agreement and therefore must address:

- Why the agreement is in the best interest of the State.
- If the cooperative features are within Caltrans policy/procedure. If not, obtain and attach an exception to that policy from the appropriate policyholder.
- The work plan for the cooperative features:
  - Roles, responsibilities and funding commitments.
- Functional unit review and concurrence.
- Who is the CEQA lead agency? The decision must conform to Caltrans policy "*Department as CEQA Lead Agency for Projects on the State Highway System*" dated June 24, 2004.
- Funding limitations, if any.
- Assumptions and high-risk elements.

See Chapter 16 – Cooperative Agreements, and the *Cooperative Agreement Manual* for additional information on cooperative agreements, cooperative agreement reports, and the cooperative features that are to be included in a PID and the cooperative agreement.

Additional information on roles and responsibilities can be found in Chapter 2 – Roles and Responsibilities.

Federal Funding Requirements

To qualify for federal funding, projects must meet FHWA and Federal Transit Administration requirements with respect to planning and programming. Projects must be:

- Included in a fiscally constrained plan that meets air quality conformity such as the regional transportation plan.
- Programmed into a fiscally constrained Federal Statewide Transportation Improvement Program/Federal Transportation Improvement Program.

Fiscal constraint is a demonstration that there will be sufficient funds to implement proposed improvements, and to operate and maintain the entire system, by comparing costs with available financial resources.

If the scope of the project is not consistent with the air quality analysis completed for the regional transportation plan, the air quality analysis must be revised before the project can be programmed.

All projects funded with federal funds must be incorporated into the Federal Transportation Improvement Program and Federal Statewide Transportation Improvement Program, as appropriate, whether programmed through the a State programming document such as the STIP or SHOPP or through the regional Surface Transportation Program or the Congestion Mitigation and Air Quality Program.

The PID shall include a discussion on the long-range planning document, reasonable and reliable funding sources, and if appropriate, the actions necessary to include the project in the Federal Statewide Transportation Improvement Program and Federal Transportation Improvement Program. FHWA provides additional guidance on expectations regarding fiscal constraints and identifying "reasonably available" future funds at: http://www.fhwa.dot.gov/planning/guidfinconstr_qa.cfm

Throughout the project development process, there must be consistency between the federally required planning and programming documents.

For additional information on federal programming, see Chapter 4 – Programming and http://www.dot.ca.gov/hq/transprog/oftmp.htm.

Project Initiation Document Approval

When a PSR is completed and approved by the District Director, the project initiation phase is complete and the project is eligible to compete for funds from the appropriate State and federal funding program.

When a PSR-PDS is completed and approved by the District Director, the project initiation phase is complete and the project is eligible to compete for the support costs of performing the PA&ED phase from the appropriate State and federal funding program. Once adequate information is available to reasonably estimate the construction and right-of-way cost and project schedule, a PR will be used to program the remaining phases of the project. In some rare cases, a supplemental PID following the format of a PSR may be used. A DPR must be completed to authorize

circulation of the draft environmental document. For further guidance on the DPR, see Chapter 10 – Formal Project Studies. A PR is required to document Caltrans' final approval of the project. For further guidance on the PR, see Chapter 12 – Project Approvals and Changes to Approved Projects.

The approval process for other types of PIDs is discussed in subsequent articles.

Starting Next Phase

Major Projects Start

Authorization to begin working on the PA&ED phase of a major project is its inclusion in the appropriate State and federal programming document or approval of a PID that specifically authorizes commencing to the next phase.

Minor Projects Start

Authority to proceed with the project development process of minor projects rests with the District Director. Each district is responsible for developing a process for identifying the needs of the district Minor Program and ensuring that those needs are aligned with the goals of the *2015 Ten-Year State Highway Operation and Protection Program Plan (SHOPP Plan)* that is administered by various Headquarters program advisors.

ARTICLE 5 Additional State Highway Operation and Protection Program Procedures

General

This section describes additional procedures that are specific to projects that are funded from the SHOPP. The SHOPP is a structured process that is focused on identification of facility needs with respect to the performance measures for operation and preservation of the existing facility.

Scoping Team Field Review

All candidate resurfacing, restoration, and rehabilitation projects and capital preventive maintenance projects as described in *Design Information Bulletin 79* – Design Guidance and Standards for Roadway Rehabilitation Projects and *Design Information Bulletin 81* – Capital Preventive Maintenance Guidelines, shall have a "scoping team field review" after initial development of an unsigned PID. The

composition of the team will vary in accordance with the complexity of the project. Attendance on the reviews is mandatory for the Headquarters program advisors and the district program advisor.

Safety Analysis

All rehabilitation projects must include a safety analysis. The analysis should be performed early in the project development process to identify safety problems that should be considered in development of the rehabilitation project. The analysis must include both an accident record review and a safety field review. The analysis is to be documented in a separate report.

The date of the safety field review should be noted in the PID. The safety field review should be a joint effort between the district's design unit and traffic unit. The district maintenance, construction, survey, and safety units must also provide safety reviews for the project, as specified in Chapter 8 – Overview of Project Development, Section 4.

The safety analyses should be scheduled for traffic staff efficiency and consistent with the scope of the project and general condition of the existing facility.

Content of the Safety Analysis

The Safety Analysis should address such items as:

- Pavement condition.
- Existing geometrics.
- Traffic volumes.
- Accident data (typically the most recent 3-year accident history by type). Include an analysis of the causes of accidents.
- Traffic Safety devises and hardware.
- Roadside obstructions.
- Drainage features.
- Structurally deficient or functionally obsolete bridges.
- Other pertinent factors.

Alternative Safety Solutions

Where accident rates are high or there are concentrations, a determination should be made as to alternative improvements that can be accomplished within the parameters of a resurfacing, restoration, and rehabilitation project.

The safety field review report is not to be attached to the PID. The report should be briefly summarized under "Traffic Data" and should include proposals for safety enhancement. Safety enhancements not included in the project should be noted, with an explanation for their exclusion. The safety field review report may make suggestions, but the decision to include them in the project will be the responsibility of the project engineer.

While the analysis may discuss a range of possible solutions to demonstrated problems, there should be no specific project recommendations made in the analysis. Project recommendations or proposals will be decided by the scoping team after considering whether the recommendation or proposal is consistent with the degree of the safety problem, is reasonable from a cost effectiveness standpoint, and is of the type that can be accomplished within the parameters of a resurfacing, restoration, and rehabilitation project.

Safety Upgrading

Special emphasis should be placed on implementing cost-effective solutions recognizing, however, that certain upgrading for safety and operational purposes are desirable and others are necessary. Recommendations and decisions on safety improvements should be consistent with the degree of the safety problem and the reasonableness from a cost standpoint.

Maintenance Considerations

Cost-effective maintenance improvements should be considered, as appropriate, particularly if they improve safety for maintenance operations. There may be low cost improvements that will provide significant safety benefits to maintenance personnel.

Documentation

The safety analysis must be documented in writing and should be retained in the project file.

Approval of Project Scope Summary Report

Each program in the SHOPP has a specific objective and the majority of projects have adequate information at the PID phase to approve an alternative. These two factors resulted in the development of project scope summary report (PSSR) templates that combine the project initiation and project approval documentation requirements into one report. The PDT shall determine if the phases can be combined. Each template has an estimate that has been customized to meet the specific program need. Figure 9-3 in Article 4 of this chapter identifies the type of PID for each program.

The PSSR format was developed to combine the project initiation and project approval phases and satisfies the requirements for both the PID and the PR depending on the environmental approval criteria as follows:

- The PSSR serves as a PID when a preliminary environmental analysis report is attached and subsequently:
  - A supplemental PSSR serves as a PR for project approval when an approved Categorical Exemption/Categorical Exclusion Determination Form is attached.
  - A supplemental PSSR serves as a DPR to approve circulation of a draft environmental document. Project approval is documented in a second supplemental PSSR.
- The PSSR serves as a PID and a PR when an approved Categorical Exemption/Categorical Exclusion Determination Form is attached.
- The PSSR serves as a PID and the approving document for circulation of the draft environmental document when a draft environmental document is attached. Project approval is documented in a supplemental PSSR.

Appendix L – Preparation Guidelines for Project Study Report provides guidance that is applicable to all PIDs. See Appendix K – Preparation Guidelines for Project Report, for discussion of the DPR requirements. Other appendices cover guidance for PSSR templates used for the various programs in the SHOPP. If the project scope corrects deficiencies not included in the template, refer to Appendix L to ensure that information in the report is complete and modify the PSSR template appropriately. Supplemental PSSRs shall follow the same requirements described in "Content of Supplemental PR," in Chapter 12 – Project Approvals and Changes to Approved Projects, Section 6.

Approval of Capital Preventive Maintenance Project Report

The capital preventive maintenance project report (CAPM-PR), when completed and approved by the District Director and the Categorical Exemption/Categorical Exclusion Determination Form is attached, will serve as the PID and also as the project approval document.

Damage Assessment Form

General

The Damage Assessment Form (DAF) is a federal form used for the FHWA Emergency Relief (ER) Program. Caltrans uses the DAF to collect information that helps define the scope of projects for both the Major Damage (Emergency Opening) Program and the Major Damage (Permanent Restoration) Program.

Damage to highway facilities that are neither Federal-aid highways nor roads on federal lands may be eligible for other federal funds authorized by the Stafford Act, administered by the Federal Emergency Management Agency (FEMA). Contact the Major Damage Restoration Program Manager in the Headquarters Division of Maintenance for instructions.

The DAF is used for project initiation and project approval for Major Damage (Permanent Restoration) Program projects when the proposed project meets all of the following conditions or at the discretion of the Headquarters SHOPP Major Damage Restoration Program Manager:

- Construction cost estimate is less than $1,000,000
- Structure (bridge, retaining walls, etcetera) accounts for less than one-third of the construction cost estimate
- Scope of work does not trigger requirement for roadway rehabilitation project standards as discussed in *Design Information Bulletin 79* – Design Guidance and Standards for Roadway Rehabilitation Projects
- Environmental clearance is a categorical exemption (CE) under CEQA and a categorical exclusion (CE) under NEPA
- Minimal regulatory permit requirements (see Chapter 13 – Project Related Permits, Licenses, Agreements, Certifications, and Approvals for types of regulatory involvement)
- Minimal right-of-way requirements (no property acquisition)
- No utility relocation by encroachment permit

- SHOPP amendment request must be submitted within 3 months of incident date
- Ready to List milestone must be within 18 months of incident date

When the complexity of the project exceeds the conditions for using the DAF, the SCVP format, PSR-PR, or PSR will be used for project initiation with the DAF as an attachment, followed by a PR for project approval as needed.

The Damage Assessment Form (DAF), form (DLA-0001), is located at: http://onramp.dot.ca.gov/hq/maint/orway/ha23/index.htm

Time Limits

FHWA Emergency Relief (ER) Program project development work must be completed by the end of the second full federal fiscal year after the declared disaster. For those projects eligible for the Federal Emergency Management Agency (FEMA) Stafford Act funding, construction must be completed within four years of the date of disaster declaration.

Major Damage Restoration Program projects, regardless of funding source, are considered to be emergency-related high priority work. Project development for these projects should be completed in a timely manner to prevent the loss of federal funds due to exceeding the required time limits.

Federal Highway Administration Review

Federal participation for the Major Damage Restoration Program requires that the FHWA liaison engineer review the major damage site as soon as possible after occurrence, in order to determine eligibility for FHWA Emergency Relief (ER) Program participation. In the event of a finding of eligibility for the FHWA Emergency Relief (ER) Program, the FHWA will approve a DAF for eligible work. Contact the Major Damage Restoration Program Manager in the Headquarters Division of Maintenance for assistance with questions.

ARTICLE 6 Director's Order for Urgent Projects

The Director's Order is a formal document approving the use of special authority granted to the Director by State law to set aside normal procedures for the advertising, bidding and award of certain types of contracts when there is an

emergency or other urgent need to protect the health and safety of the traveling public. Examples would be repairing a bridge or roadway failure or making repairs to prevent a failure.

The Director's Order with a DAF is used for initiation, programming, and approval of projects in the Major Damage (Emergency Opening) Program.

A Director's Order is administered by using the Director's Order Request - Funds Request form (MTC-0130). For additional information about Director's Orders, including the Director's Order Guidelines, see:
http://onramp.dot.ca.gov/hq/maint/orway/ha23/index.htm

ARTICLE 7 Expenditure Authorization Project Report for Minor B and Maintenance Projects

Minor B

For very simple projects that fall under the dollar limit for Minor B projects, the completed (EA-PR) serves as the PID and the PR. See Appendix B – Preparation Guidelines for Expenditure Authorization Project Report for the EA-PR.

Maintenance Projects

For maintenance projects, the completed EA-PR serves as the PID and the PR.

Traffic Signal Projects

Although Minor B projects normally are not required to have a formal PR, the *California Manual on Uniform Traffic Control Devices (California MUTCD)*, specifically requires a PR to investigate the conditions at locations where a new traffic signal is to be installed, an existing traffic signal is to be modified, or an existing traffic signal is to be removed.

A written summary of the investigation and justification for the installation, modification, or removal of a traffic signal is required when any portion of the intersection is within the State Highway System. The PR shall include the information outlined in the *California MUTCD, Part 4, Section 4B.102(CA)*. The purpose of this written report is to provide the technical justification for the traffic signal work and may be an abbreviated report in a cover letter format instead of a formal PR.

The district may establish its own level of approval authority while also indicating the professional engineer in responsible charge of the work.

Traffic signal projects that include restriping or other geometric changes that introduce or perpetuate nonstandard conditions for lane widths, shoulder widths, disabled access, etcetera, will require approval of a Fact Sheet for Exceptions to Mandatory Design Standards even though the PR is reduced to this cover letter format. See Chapter 21 – Exceptions to Design Standards and Appendix BB – Fact Sheets for Exceptions to Mandatory Design Standards for more information.

This cover letter and attachments must be maintained on file as a part of the historical background of that portion of the State Highway System within the district's jurisdiction.

ARTICLE 8 Project Initiation Process for Projects-funded-by-others

General

A project-funded-by-others is a highway improvement project that is sponsored by a local agency or private developer and does not use any funds that are programmed into the STIP or SHOPP. Because Caltrans is responsible for protecting the public's investment in the State Highway System, Caltrans must review all proposed highway improvements that are funded by others. When a local agency or a developer funds a project, it is imperative for the sponsor to have early and continual discussions with Caltrans to establish the viability of the proposal, procedural requirements, and the schedule for various project deliverables. This article discusses the processes that apply to projects-funded-by-others.

Types of Project Initiation Documents for Projects-funded-by-others

Based on the complexity of the project, the impacts, and the cost of the project on the State Highway System, a project will require a permit application review, the development of a PEER or a PSR-PDS.

If a project-funded-by-others can be accelerated and construction can begin during the proposed programming period, it may be appropriate to use the PSR format and program right-of-way and construction dollars at the end of the PID phase. Only a district director with a request from a project sponsor can approve the use of the PSR

format. Districts should work with their local partners to carefully consider the ability to deliver the project within the STIP programming period.

Encroachment Permit Process

District Permit Engineer Initiates Procedure

Upon receiving the permit application, the district permit engineer will determine the appropriate level of documentation. In addition to the permit application information, the permit engineer may require either a PEER or a PSR-PDS to obtain permit approval. If a PEER is determined to be the appropriate level of documentation, the district permit engineer will use the Encroachment Permit Application Review form (TR-0110) to designate a responsible unit (design, traffic operations, etcetera) for possible PEER preparation. If a PSR-PDS is determined to be the appropriate document for scope approval, then see PID process for projects-funded-by others in Article 8 of this chapter.

Permit Application Review

Project sponsors or their representative shall sign and submit an encroachment request to enter the right-of-way and build the improvements approved by Caltrans. For further information on an encroachment permit application see: http://www.dot.ca.gov/hq/traffops/developserv/permits/applications/index.html.

The permit engineer, in consultation with other functional units, decides whether or not the project should be considered an encroachment permit project if the project meets the complex project definition as defined by the encroachment permit policy in the *Manual for Encroachment Permits on California Highways* or if the construction cost is greater than $1,000,000.

Permit Engineering Evaluation Report

If a project is considered to be a non-complex project and the construction cost for the project is less than $1,000,000, then the review and approval of the project is completed under the encroachment permit process. Caltrans determines the complexity of the project through the permit application review. The dollar limit represents the estimated value of permit work improvements within the existing State highway right-of-way. The dollar limit does not include the value of routine drainage or utility work or the value of dedicated right-of-way. For additional information about this process see Appendix I – Preparation Guidelines for Permit Engineering

Evaluation Report and the *Manual for Encroachment Permits on California Highways*.

If the project is considered to be a non-complex project and the construction cost of the project is less than $3,000,000, then review and approval of the project can be completed through the PEER process. Caltrans determines the complexity of the project during a processing assessment as discussed in Chapter 2 – Roles and Responsibilities, Section 5.

Project Study Report-Project Development Support

If the project meets the complex project definition as defined by the encroachment permit policy in the *Manual for Encroachment Permits on California Highways* or if the construction cost is greater than $3,000,000, the project proponent shall submit a PSR-PDS as described in Appendix S – Preparation Guidelines for Project Study Report-Project Development Support Project Initiation Document. Caltrans staff will provide independent quality assurance for the PSR-PDS and will work with the sponsor to execute a cooperative agreement (CA) or highway improvement agreement (HIA) for cooperative elements identified in the approved PSR-PDS. Chapter 2 – Roles and Responsibilities discusses the roles and responsibilities of both Caltrans staff and other sponsors of projects on the State Highway System. Information on cooperative agreements can be found in Chapter 16 – Cooperative Agreements.

Approval of a New Public Road Connection Requires a Project Initiation Document

The PEER process cannot be used for a project that requires a new public road connection to a freeway or expressway. The new public road connection process is complex in that it requires Caltrans to make an assessment that the operations of the facilities has been protected and that the connection is in the best interest of the State. This recommendation must be formally submitted to the CTC, and if applicable, to FHWA for approval.

Early Confirmation Required

Prior to making commitments to the requesting party, early written confirmation of the concept from the District Director is required for a proposed new connection to an expressway (controlled access highway). Early written confirmation is given only after consideration of access control policy and engineering aspects such as

connection spacing, fit with local general plans, and the feasibility of potential ultimate conversion of the State highway into a full freeway. A request for a proposed new public road connection to an expressway (controlled access highway) is made by submitting to the District Director an unsigned PID that contains, at a minimum, the information required in Chapter 27 – New Public Road Connections.

Determining if a Permit Engineering Evaluation Report is Required for Projects Under $1,000,000

The responsible district unit will review and determine whether or not a PEER is required. If the unit determines that there will be no adverse impact on highway operations, maintenance, and tort liability, it must indicate so in the appropriate box shown on the Encroachment Permit Application Review form (TR-0110) with the signature by at least a senior level person. The unit then does their usual permit review, fills out the rest of the form, and returns it to the district permit engineer. If the responsible district unit determines that there will be impacts, a PEER is required and the unit will be responsible for the preparation, review, and approval of the PEER. See Appendix I for more information.

A PEER is not required for projects that involve only routine utility and drainage encroachment work within the right-of-way. The normal encroachment permit process handles this work.

The PEER melds engineering review of permit proposals into the normal encroachment permit application review to eliminate any separate processing of a PID. The responsible unit for PEER preparation will usually be design or traffic operations, depending upon type of work. Other district units involved, such as environmental, right-of-way, utilities, maintenance, etcetera, will review the permit application as appropriate. Other district units will not be involved in the PEER unless requested by the responsible unit.

A Permit Engineering Evaluation Report Evaluates Impacts on State Highway for Projects Under $1,000,000

The responsible unit will evaluate the impacts of the permit proposal upon the State highway, determine its geometric and functional adequacy, and summarize the findings in a PEER, which should contain the information needed to justify (or reject) the proposed work.

As a general rule, a PEER should be prepared when the traffic or other actions generated by the permittee adversely affect operation and/or maintenance of the highway or there is potential to expose Caltrans to tort liability suits. The primary purpose of the PEER is to document the engineering rationale for Caltrans' decision in a permit action.

A PEER should always be prepared when new operating improvements are constructed by the permittee that become part of the State highway. These include signalization, channelization, left-turn pockets, widening, realignment, public road connections, and bike paths and lanes. Commercial road approaches would not usually require a PEER when grades are flat and there are no sight distance restrictions; otherwise a PEER should be prepared. Any widening by adding lanes should require a PEER, unless it is part of a precise plan for the highway adopted by the local agency and has been previously concurred by Caltrans.

Preparation Timing

The time needed to prepare, evaluate, and finalize a PEER will depend upon the scope and complexity of the work. When the preparation, evaluation, and finalization of a PEER can be completed within the review deadline, the PEER should be attached to the Encroachment Permit Application Review form (TR-0110) and returned to the district permit engineer. When additional time is required, the responsible unit should return the Encroachment Permit Application Review form (TR-0110) immediately to the district permit engineer, with notification of the estimated date that the PEER will be completed and whether or not additional information is needed.

Nonstandard Feature Approval

When nonstandard design features are proposed by an encroachment permit applicant, fact sheets are prepared by the applicant's registered civil engineer. The Caltrans functional unit responsible for preparation of the PEER will facilitate the coordination with the Headquarters Project Delivery Coordinator for draft fact sheet review. If a PEER is not required, the fact sheet processing will be facilitated by the functional unit assisting the district permit engineer. See Chapter 21 – Exceptions to Design Standards and Appendix BB – Fact Sheets for Exceptions to Mandatory Design Standards for more information.

Access Control Change Procedures

If the permit proposal involves a reduction in or crossing of access control or the transfer of Caltrans right-of-way to the applicant see Chapters 17, 26 and 27 for processing instructions. This work is normally done during preliminary negotiations with the permit applicant before the applicant formally submits the permit to Caltrans. FHWA approval is required for proposals on the Interstate System and may be required for non-Interstate System projects. After approval is received, the right-of-way transaction is executed and the encroachment permit is processed. A PEER would cover the permit work where applicable.

Right-of-Way Dedication Procedures

If the permit work involves dedication of additional rights of way along the access control line without any reduction in access restrictions, separate District Director concurrence is not needed. The involvement of the Headquarters Project Delivery Coordinators should be sought when substantial modifications to access control position are proposed. In all cases, it is important that the dedication specifically provides for access control and that right-of-way record maps be updated. A map or paper shifting of the access control line is not legally binding—the restriction must be contained in a deed or quit claim.

California Environmental Quality Act /Traffic Mitigation

On more complex permit proposals involving CEQA and traffic mitigation approvals by a local agency, it is expected that the responsible unit would have been involved in preliminary negotiations prior to final PEER preparation. If this has not been done, the permittee should be called for an immediate meeting to resolve these issues.

All Permit Proposals Need Evaluation

The fact that a PEER is not prepared does not in any way diminish the need for the responsible unit to thoroughly evaluate the permit proposal and summarize conclusions in the “Remarks” area of the Encroachment Permit Application Review form (TR-0110).

Approval

The District Director is responsible for approval of the PEER. One copy of the approved PEER is to be sent to Office of Project Development Procedures.

Permit Review Charges

PEER preparation is considered part of the permit review process, with costs to be charged to the EA assigned by the district permit engineer. Charges should be reasonable. Excessive hours should be charged to the unit's overhead EA. Prior staff work not directly associated with actual permit processing or PEER preparation, even though later constructed by permit, should be charged to the unit's overhead EA, and not to the permit review EA.

Permit Engineering Evaluation Report Process for Projects with Construction Costs from $1,000,000 to $3,000,000

Caltrans Point of Contact Initiates Procedure

Upon receiving contact by a local entity or developer, the Caltrans point of contact will set up an initial meeting to make a determination on which process the project will undergo. If the project is non-complex and construction cost of the project is less than $3,000,000 then the project is eligible to follow the PEER process. If the project does not meet the eligibility requirements for processing as a combined project study report-project report (PSR-PR), it is not eligible for processing as a PEER.

The PEER process is intended to streamline the processing of projects-funded-by-others by reducing the steps in the project development process. This is not intended to relieve the project sponsor from meeting all other Caltrans policies, standards, and practices. Caltrans may increase the level of documentation and processing for those projects that are deemed complex.

The PEER will document both concept approval and project approval eliminating the need for separate processing of a PID. The project sponsor is responsible for preparation of the PEER and providing all supporting documentation. The Caltrans point of contact will ensure that the appropriate district units, such as design, environmental, right-of-way, utilities, maintenance, etcetera, review the project as needed. Other district units will not be involved in the PEER unless requested by the Caltrans point of contact.

A Permit Engineering Evaluation Report Evaluates Impacts on State Highway

The project sponsor will evaluate the impacts of the project upon the State highway, determine its geometric and functional adequacy, and summarize the findings in a

PEER, which should contain the information needed to justify (or reject) the proposed work.

As a general rule, a PEER should evaluate and document the impacts of the project on the operations and/or maintenance of the highway. The primary purpose of the PEER is to document the engineering rationale for Caltrans' decision in a permit action.

Preparation Timing

The time needed to prepare, evaluate, and finalize a PEER will depend upon the scope and complexity of the work. Once the PEER is complete and the oversight engineer has approved the final plans and specifications, the project is then submitted to the permit engineer for processing by submittal of an encroachment permit application by the project sponsor. When the district permits office receives the completed encroachment permit application, the statutory 60-day review limit begins.

Nonstandard Feature Approval

When nonstandard design features are proposed by a project sponsor, fact sheets are prepared by the sponsor's registered civil engineer. The Caltrans functional unit responsible for oversight of the PEER will facilitate the coordination with the Headquarters Project Delivery Coordinator for draft fact sheet review. See Chapter 21 – Exceptions to Design Standards and Appendix BB – Fact Sheets for Exceptions to Mandatory Design Standards for more information.

Cooperative Agreements

A cooperative agreement will normally not be required for projects processed via the PEER process. However, a cooperative agreement will be required if there is an exchange of effort, funding, or materials between Caltrans and a local agency regardless of the capital outlay project cost. Projects sponsored by private entities will require a highway improvement agreement.

All projects-funded-by-others, not just those that are called "encroachment permit projects," require an encroachment permit whenever the project sponsor, its consultants, or its contractors work within the existing State highway right-of-way.

Approval

The District Director is responsible for approval of the PEER. One copy of the approved PEER is to be sent to the Office Project Development Procedures.

Project Initiation Document Process for Projects-funded-by-others

The project development procedures for projects-funded-by-others are generally the same as those procedures for projects that are funded through a State-programming document. Additional procedures however, are necessary to approve cooperative elements through a cooperative agreement or highway improvement agreement. Caltrans retains stewardship responsibility for FHWA requirements and as such makes the arrangements for project development documents to be reviewed by FHWA. Caltrans performs independent quality assurance on projects-funded-by-others to ensure that the completed project conforms to established standards and policies.

The district responsible unit assigned by the district permit engineer will be notified so that a project manager will be assigned to coordinate the project approval. Communication between the project manager, the district permit engineer, the applicant, applicable FHWA units, and appropriate district functional units, such as the environmental, structures, and traffic units, is essential to expedite this process.

A meeting of the applicant and all involved units shall be held to determine the type of PID, the appropriate approval process, and environmental documentation needed to complete the project. The project manager will provide a copy of the PID outline, the PR outline, and any appropriate draft language for inclusion in the cooperative agreement or highway improvement agreement. The project manager shall document this meeting with a letter to the applicant.

Once the applicant completes and submits the PID and draft cooperative agreement or highway improvement agreement, the project manager should distribute the document for review by all involved Caltrans and FHWA units. The time needed to review and approve engineering documents will depend on the completeness, scope, and complexity of the work. The project manager will notify the applicant of the expected completion date for the review and whether additional information is needed.

Once the PID is found to be satisfactory, the project manager recommends the PID for approval by the District Director.

The District Director's signature signifies approval of the project concept and that reasonable estimates and time frames are reflected in the report. The District Director shall not approve a PSR unless there is an executable cooperative agreement or highway improvement agreement attached.

The individual in responsible charge, a registered engineer if it is an engineering report, or the appropriate licensed professional in the State of California signs the report. The appropriate stamp or seal shall be applied to the report.

After approval, a copy of the final document and all associated scoping documents shall be kept in the project history files.

The approved PID is the authorization to enter into a cooperative agreement or highway improvement agreement for the study, design, and construction of the State highway. For information on combining the project initiation phase and the project approval phase see following article.

ARTICLE 9 Combined Project Study Report-Project Report

General

Proposals that have the consensus of key stakeholders and a clear understanding of the requirements to complete the project can be scoped early in the project development process. As such, the PDT may recommend consolidation of the PID and PR into a combined PSR-PR if a project has a well-defined purpose-and-need and a well-defined project scope. The District Director retains the authority to use a combined PSR-PR.

The combined PSR-PR is an engineering document and must meet the requirements for both a PID and a PR. See Appendix K – Preparation Guidelines for Project Report and Appendix L – Preparation Guidelines for Project Study Report, for further guidance on developing PIDs and PRs. See Appendix A – Preparation Guidelines for Combined Project Study Report-Project Report for a template of the combined PSR-PR.

Ineligible for a Combined Project Study Report-Project Report

If a project has any of the following features, the project cannot use the combined PSR-PR process:

- New or modified Interstate access, as FHWA approval is a two-step process.
- Approval of a route adoption by the CTC.
- An environmental impact report to comply with CEQA and/or requiring an environmental impact statement to comply with NEPA.
- A Clean Water Act, Section 404 Individual Permit.
- A Coastal Development Permit.
- A San Francisco Bay Conservation and Development Commission Permit.
- A Tahoe Regional Planning Agency Permit.
- Formal consultation under the Federal Endangered Species Act.

Considerations for a Combined Project Study Report-Project Report

Once it is determined that the project is not specifically ineligible from using a combined PSR-PR, the PDT shall perform a focused risk assessment to identify factors that can affect project scope and estimate the degree of uncertainty that these factors pose. At a minimum the PDT shall consider:

- Consensus of key stakeholders on the project purpose-and-need.
- Consensus of key stakeholders on the project scope. Stakeholders may include, but not be limited to, the project sponsor, Caltrans as the owner-operator of the State Highway System, CTC, federal agencies that have approval authority, railroad entities, and other regulatory agencies.
- Impacts to the State Highway System as identified by traffic studies.
- Impacts to the environment and community. The district environmental generalist shall provide factors to make this evaluation.
- Availability of Caltrans project initiation and capital support resources to provide delivery products and/or independent quality assurance.
- Geometric feasibility of the proposed alternatives (see Exceptions to Design Standards, Article 4 of this chapter).
- A reasonable funding source.

State Highway Operation and Protection Program Programs

The PDT may recommend using the combined PSR-PR process and template for a SHOPP project after performing a focused risk assessment on factors that affect the project purpose-and-need, and project scope.

State Highway Operation and Protection Program Safety Improvement Program

Because of the high priority and importance of an expedited delivery of safety improvements, a combined PSR-PR is the preferred document for the SHOPP Safety Improvement Program.

However, if high risk factors are identified in the focused risk assessment safety improvement project, a PSR may be the appropriate document to ensure that there are adequate resources to identify and resolve issues for project approval. The PDT focused risk assessment shall be documented. The district safety coordinator has the authority to grant an exception to the combined PSR-PR requirement for safety improvement projects.

Projects-funded-by-others

The PDT may recommend the use of the combined PSR-PR process and template for projects-funded-by-others after performing a focused risk assessment on factors that affect the project purpose-and-need, and the project scope. The District Director retains the authority to approve the use of the combined PSR-PR.

The combined PSR-PR eliminates the separate processing of a PID and a PR. Although one report is prepared, it is expected that the PSR-PR will address issues affecting operations, maintenance, and any potential tort liability on the State highway, and that the proposed work will conform to current Caltrans policies, practices, and standards. All technical information required for normal PID processing must be identified and included in the PSR-PR. Projects must follow the process identified in Article 8, Project Initiation Process for Projects-funded-by-others.

For projects-funded-by-others a combined PSR-PR documents agreement on:

- The purpose-and-need,
- Project-scope,
- Estimated cost,
- Conceptual approval, and
- Cooperative elements.

The approved PSR-PR with an approved environmental document is the authorization to enter into a cooperative agreement or highway improvement agreement for the design and construction of the State highway project. A cooperative agreement, ready to sign, must be attached to the combined PSR-PR.

If the project is sponsored by a local entity, the local entity must understand that there is a risk involved by preparing a combined PSR-PR. The focused risk assessment ensures that all parties be aware of risks. Early and continual consultation with Caltrans can reduce the need for additional project work and project delays.

Project Approvals

The combined PSR-PR, when completed and approved by the District Director, will serve as an approved PR when the environmental determination/documentation is attached. Without these items, it functions as a document to approve circulation of the environmental document. A supplemental PSR-PR will need to be completed once the environmental document is finalized to approve the project for design. The supplemental PSR-PR shall follow the same requirements as described in "Content of the Supplemental PR," Section 6, Chapter 12 – Project Approvals and Changes to Approved Projects.

ARTICLE 10 Ceasing Work on Programmed Projects

Request Process

District requests for approval to cease work on programmed projects should be submitted via a memorandum to the Headquarters Division of Transportation Programming. The memorandum should explain the factors warranting deletion of the project and should specify the resources in personnel years (PYs) and dollars that will be made available by deletion of the project. Where applicable, the

memorandum should indicate if the deletion has the concurrence of local and regional agencies.

Note: This process was commonly known as the UNPAR process, derived from the Project Authorization Request (PAR), which is a report format that has been discontinued.

Approval Process

Before the request can be approved, the Headquarters program advisors for the appropriate programs must review and approve the district's memorandum.

The Headquarters program advisors, in cooperation with the Headquarters Division of Transportation Programming, may also initiate deletion of programmed projects because of a change in program priority.

Cease Work at Agreed Milestone

The Division of Transportation Programming will notify the Division of Design Division Chief, Division of Budgets, Division of Administration, and the district of the action taken. Project activities will cease at an agreed upon milestone.

CHAPTER 10 – Formal Project Studies

Table of Contents

CHAPTER 10 – Formal Project Studies 10-3
SECTION 1 General 10-3
Reference Information 10-3
Applicability 10-3
Initiating Formal Studies 10-3
Project Development Category 10-4
Engineering Studies and Preliminary Design 10-4
Environmental Studies 10-4
Community Involvement 10-5
Studies Determination 10-5
SECTION 2 Engineering Studies 10-6
General 10-6
Effect of Physical Features 10-6
Scoping Project Features 10-6
Importance of Accurate Mapping 10-6
Phases of Engineering Studies 10-7
Engineering Standards 10-8
Geometric Drawings 10-8
Scope of Engineering Studies and Preliminary Design 10-8
Life-Cycle Cost Analysis 10-10
Headquarters Project Delivery Coordinator Review 10-10
SECTION 3 Environmental Studies 10-11
Engineering/Environmental Comparison 10-11
Environmental Effects Need Specific Studies 10-11
Lead Agency 10-11
Begin Environmental Studies 10-11
Types of Studies 10-12
Federal Concerns 10-12
Alternative Studies 10-13
Responsibility of Project Development Team 10-13
Notice of Preparation / Intent 10-13
Continuous Environmental Involvement 10-14
SECTION 4 Identifying Project Alternatives and Mitigations for Impacts .. 10-15
General 10-15
Stating the Purpose-and-need 10-15
Identifying Possible Alternatives 10-18

Eliminating Unreasonable Alternatives 10-19
Identifying Specific Effects of Each Alternative 10-20
Determine if Additional Alternatives Need to be Developed 10-20
Identifying Reasonable Mitigation Measures 10-20
Perform Constructability Reviews 10-21
SECTION 5 Draft Project Report 10-22
ARTICLE 1 General 10-22
Purpose of Draft Project Report 10-22
Authorization for Public Hearing 10-22
Authorization to Circulate Draft Environmental Document 10-22
Project Approval 10-22
Coordination with Project Study Report 10-23
Coordination with Project Study Report-Project Development Support .. 10-23
Mapping and Costs 10-23
Notify Local Agencies of Right-of-Way Needs 10-23
Approval by District Director 10-24
Submittal to Headquarters Division of Design 10-24
Approval of Changes 10-24
ARTICLE 2 Format and Content 10-24
General 10-24
Engineering and Environmental Data 10-25
Project Report Outline 10-25

CHAPTER 10 – Formal Project Studies

SECTION 1 General

Reference Information

Some of the references found in this chapter have hyperlinks that connect to Caltrans intranet pages which are not displayable to the general public. Until such time that the specific reference becomes available on the internet, the user will have to contact their district liaison, Caltrans project manager, or the appropriate Headquarters division to inquire about the availability of the reference.

Applicability

This chapter covers those projects that had a project study report (PSR) or a project study report – project development support (PSR-PDS) as the project initiation document. It also applies to those projects having a specialized project initiation document that requires further project studies prior to project approval.

For many projects that use a specialized project initiation document (other than the PSR), project studies are complete and project approval is granted when the project initiation document is approved. Chapter 12 – Project Approvals and Changes to Approved Projects, Section 4, identifies those project initiation documents that function as project approval documents and also specifies what conditions need to be met for this to apply. These specialized projects can begin the final design process once they are approved and the project has been programmed.

Initiating Formal Studies

The project initiation process produced a PSR or other project initiation document that may include project alternatives. With the exception of the PSR-PDS, the preliminary scope of each alternative is determined, reliable estimates are prepared, and a feasible schedule is established. When the most likely alternative (or minimum alternative or a stage of the project) is included in an appropriate programming document, formal project studies can begin. Formal project studies should focus on the programmed project unless the programmed project is a stage—in which case the total project would probably be studied.

A PSR-PDS is used to gain approval for the project studies to move into the Project Approval and Environmental Document (PA&ED) phase. The PSR-PDS is used to estimate and program the capital outlay support cost necessary to complete the studies and work needed during PA&ED only. Only existing information is used and preliminary studies are not prepared for a PSR-PDS. Therefore, formal studies for projects initiated with a PSR-PDS will take more time to prepare and require more resources to complete than a project initiated with another type of project initiation document (PID).

Project Development Category

The project development process places projects into Project Development Categories, which are defined by various project-processing requirements. The project development team (PDT) determines the Project Development Category for a project, as well as the type of required environmental studies.

The PDT also addresses other questions:

- Is the project categorically exempt under the California Environmental Quality Act (CEQA)?
- Are the project effects environmentally significant?
- Is a negative declaration or environmental impact report (EIR) required?

If an EIR is contemplated, the PDT will undertake formal scoping to determine the extent of required environmental studies.

Engineering Studies and Preliminary Design

For all projects, except for those initiated with a PSR-PDS, preliminary engineering studies are updated and preliminary design commences for viable project alternatives before environmental studies begin. For projects initiated with a PSR-PDS, the preliminary engineering studies are performed in conjunction with formal studies. The preliminary design is used to develop base maps for the required environmental studies.

Environmental Studies

Environmental studies include air, noise, water, wetlands, historical & cultural, parklands, historic & recreation areas, coastal zone, wildlife & plants, and visual

aspects. Social, economic, and land-use issues are also addressed, along with specific concerns such as potential hazardous waste sites and right-of-way impacts.

Community Involvement

A community involvement plan is mandatory and is developed with active participation from local representatives. See Chapter 22 – Community Involvement, Article 4. It is designed to obtain answers to questions such as:

- Does the project have community support?
- Is the project "right" for the community?
- How can project impacts be minimized and transportation services be maximized?

Studies Determination

The PDT is responsible for directing and evaluating the studies. An initial public information meeting is held to measure the public support for the project. Additional informational meetings may be required to obtain sufficient support to proceed. Once support is obtained, the PDT proceeds with the studies. Completion of studies leads to preparation of a draft project report and a draft environmental document or, for a project that is categorically exempt/excluded, directly to the preparation of a project report.

SECTION 2 Engineering Studies

General

Although engineering studies are performed during all phases of project development (including construction), the engineering studies and preliminary design performed following the project initiation phase will support environmental evaluation and project approval. The project engineer uses imagination, ingenuity, and technical skill to develop or refine transportation project alternatives to solve a transportation problem.

Effect of Physical Features

Engineering studies begin with the identification of physical features, to establish physical controls and constraints. Physical features include terrain (flat, hilly, mountainous), material (dirt, sand, rock), improvements (buildings, drainage structures, utilities), environmental concerns (flora, fauna, wetlands), etc.

Scoping Project Features

Once physical controls are defined, project features are scoped. The following questions are posed:

- What level of service (LOS) is obtainable?
- What design speed is most suitable for the LOS and physical features?
- What typical section is needed to accommodate traffic?
- Is the proposed project cost effective?

Importance of Accurate Mapping

Adequate mapping is necessary as a basis for accurate engineering studies. The Right-of-way division needs accurate maps to make estimates. Environmental studies require good mapping, particularly for cultural and biological studies. Windshield surveys may help produce estimates, but good project scope and good estimates need good maps.

Accurate maps are not always available early, so available mosaics or strip maps should be systematically checked in the field to ensure reasonableness. The mapping prepared in the project initiation phase should be checked, updated, and expanded as required (as-built plans, mosaics, strip maps, aerial contour maps).

It is essential that appropriately accurate mapping and photography be obtained on each route study or major improvement project. In rural areas, foothills, or mountainous terrain, mapping on a scale of 1" = 200' with 10-ft contours is considered appropriate; in some cases, mapping at a smaller scale may be appropriate in particularly rugged terrain. In urban areas, larger scale maps with closer contour intervals usually will be desirable; a scale of 1" = 50' or 1" = 100' is preferable.

Under special circumstances where the combination of terrain and development is especially critical, the use of photo-contour maps should be considered. In relatively flat areas, mosaics supplemented by elevation data or correlation with United States Geological Survey (USGS) maps may be satisfactory.

For further information on mapping, see the *Plans Preparation Manual*.

Phases of Engineering Studies

Early engineering studies began with the identification of the transportation problems and the identification of reasonable alternative solutions. The early feasibility studies used sources such as the transportation concept report, district system management plan, regional transportation plan, congestion management program, and initial engineering studies, which served as the basis for the project initiation document. They addressed such questions as:

- What is the problem?
- What are the possible solutions?
- Can significant environmental impacts be avoided?
- What is the cost?

Since formal environmental studies are not undertaken during the project initiation phase, there was no public input beyond that provided by local agencies, regional agencies, or resource and regulatory agencies.

At the “formal project studies” stage, formal engineering studies expand the project initiation studies, as necessary. Formal studies for projects initiated with a PSR-PDS may take more time to prepare and require more resources to complete than projects initiated with another type of project initiation document since initial studies are not prepared when developing a PSR-PDS. These and subsequent engineering studies reflect public input and the need for environmental evaluation and project approval.

Engineering Standards

By adherence to the engineering standards in the *Highway Design Manual*, engineering studies should lead to a serviceable, high quality product. These standards must be met unless an exception to advisory design standards or mandatory design standards is processed and approved.

Geometric Drawings

On location studies, separations and interchanges for each alternative studied are shown on draft project report (DPR) and environmental exhibit maps, either by schematics or by delineating the geometric pattern of these facilities. Because interchange arrangements could have a deciding effect upon the relative traffic service provided by the different studied locations, consideration must be given to the type and location of interchanges.

Where special problems are involved, such as provision for local service ramps in the proximity of freeway-to-freeway interchanges, the working drawing delineating the geometric pattern of these facilities that are used as the basis of estimates must be cleared with the Headquarters Project Delivery Coordinator for feasibility prior to submittal of a DPR for approval.

Scope of Engineering Studies and Preliminary Design

Engineering studies go hand-in-hand with environmental studies. The scope of the studies should be sufficient to complete the environmental evaluation of the project and to reach a decision on project approval. Consistent with Federal Highway Administration (FHWA) policy and federal regulations, as a project's lead agency for National Environmental Policy Act (NEPA), Caltrans will perform only the work necessary to complete NEPA decision documents and comply with other related environmental laws and regulations to the maximum extent possible during the NEPA process. This work includes environmental studies, related engineering studies, agency coordination, and public involvement.

> Preliminary design: Activities required defining the general project location and design concepts. It includes, but is not limited to, preliminary engineering and other activities and analyses, such as environmental assessments, topographic surveys, metes and bounds surveys, geotechnical investigations, hydrologic analysis, hydraulic analysis, utility engineering, traffic studies, financial plans, revenue estimates, hazardous materials assessments, general estimates of the types and quantities of materials, and other work needed to

establish parameters for the final design. Prior to completion of the NEPA review process, any such preliminary engineering and other activities and analyses must not materially affect the objective consideration of alternatives in the NEPA review process.

Other activities that are considered preliminary design include: design and engineering activities to be undertaken for the purposes of defining project alternatives; completing the NEPA alternatives analysis and review process; complying with other related environmental laws and regulations; environmental-justice analyses; supporting agency coordination, public involvement and permit applications; development of environmental mitigation plans; development of typical sections, grading plans, geometric alignment, noise wall justifications, bridge type/size/locations studies, temporary structure requirements, staged bridge construction requirements, structural design (substructure and superstructure), retaining wall design, noise wall design, design exceptions, guardrail length/layout, existing property lines, title and deed research, soil borings, cross sections with flow line elevations, ditch designs, intersection design/configuration, interchange design/configuration, pavement design, storm/sanitary sewer design (plan/profile), culvert design, identification of removal items, quantity estimates, pavement details/elevation tables, and preliminary traffic control plans.

The list of activities above is not exclusive. Other activities necessary to the NEPA decision and that establish the parameters for final design may proceed as preliminary design so long as those activities do not materially affect the objective consideration of alternatives in the NEPA process or have an adverse environmental impact.

FHWA encourages flexibility within existing regulation in advancing project-specific design activities that streamlines project delivery by reducing overall project delivery time frames and reducing costs in developing and delivering projects. Where feasible, it is advantageous to move forward on design work that is defined as preliminary design, as long as no commitments are made to any alternative being considered in the NEPA process, and the design work does not prejudice the objective comparison of all alternatives under consideration.

Engineering studies produce a line (location), grade (elevation), typical section (width), and cost for each alternative under consideration. Engineering studies include: geological, advance structures, drainage, noise abatement elements, capacity, and traffic management. Value analysis studies are also conducted to ensure that concepts are economically feasible. The information discussed in the project study report should be reviewed and the data expanded and updated as necessary.

Life-Cycle Cost Analysis

Life-cycle cost analysis shall be completed as discussed in Chapter 8 – Overview of Project Development.

Headquarters Project Delivery Coordinator Review

In all cases, geometric and grade line alternatives should be reviewed by the Headquarters Project Delivery Coordinator prior to preparation of the DPR.

SECTION 3 Environmental Studies

Engineering/Environmental Comparison

While the engineering studies described in this chapter, do consider environmental impacts, they concentrate primarily on design standards, operating characteristics, and cost. Environmental studies focus on the environmental impacts of the project alternatives, giving further consideration to how environmental, social, and economic impacts can be avoided or significantly reduced.

Environmental Effects Need Specific Studies

A project's direct effect on environmental resources (wetlands, historic buildings, etc.) and its potential effects on less obvious resources (air quality, noise, water, etc.) require study before project decisions can be made.

Preliminary environmental evaluations were performed in both the system planning and the project initiation stages. These basic studies identified environmental issues and anticipated adverse effects. Avoidance alternatives, if required, should also have been considered at that time. If an avoidance alternative was required, and a reasonable avoidance alternative existed, further consideration of non-avoidance alternatives should have ceased.

Lead Agency

For projects that are not entirely Caltrans projects, the assignment of the CEQA lead agency is specified in a cooperative agreement or in a memorandum of understanding. Chapter 2 – Roles and Responsibilities discusses the determination of the lead agency.

Begin Environmental Studies

Formal environmental studies for project development begin after programming, after updating the studies used to develop the project study report (traffic forecasts, etc.), and after adequate mapping has been prepared showing the area of potential impact. For certain Project Development Categories (see Chapter 8 – Overview of Project Development, Section 5, Figure 8-1, and Chapter 22 – Community Involvement, Article 5), initial public meetings are held to assist the project development team (PDT) in reaching agreement on the project study process. Then, for various Project

Development Categories (see Chapter 8 – Overview of Project Development, Section 5, and Chapter 22 – Community Involvement, Article 10), a written notice of studies is issued to provide public notification of the process that will be followed.

At the same time, the project manager sends a memo requesting the environmental unit to begin environmental studies. The memo must provide specific project information and must specifically request a response from the environmental unit, since it establishes an important milestone date (Milestone 020: Begin Environmental Studies).

Types of Studies

The type and extent of environmental studies vary with the location and complexity of the project. Typically, the studies need to address air quality, noise impacts, water quality, wetlands, coastal zone infringement, floodplains, wildlife and plants, historic and cultural resources, social and economic changes, park lands and recreational areas, hazardous waste, energy, and visual effects.

Federal Concerns

The federal government's involvement in the project development process is described in Chapter 2 – Roles and Responsibilities. Particular attention, however, must be given to Federal Highway Administration (FHWA) involvement with the following federal executive orders, environmental laws and their implementing regulations, and agreements:

- 42 USC 303 — popularly known as Section 4(f), prohibits use of publicly owned parkland, recreation area, wildlife or waterfowl refuge or significant historic site if there is a prudent or feasible alternative.
- National Historic Preservation Act — requires that cultural resources including archaeological sites, historic architectural and other historic resources be identified. If identified areas are affected, a Historic Property Survey Report (HPSR) must be prepared to meet the requirements of Section 106 clearance by the FHWA.
- Endangered Species Act — requires a determination as to whether any federally listed species may be affected. This includes both a "direct taking" and a loss of critical habitat. Formal consultation with the U.S. Fish and Wildlife Service may be required, and informal consultation may be undertaken for a candidate species that may become listed during the life of the project.
- NEPA/404 Memorandum of Understanding (MOU) — early identification of potential impacts to protected resources and the documentation of all steps

taken to reach agreement with resource and regulatory agencies is discussed in the NEPA/404 MOU.

- Clean Water Act — requires a U.S. Army Corps of Engineers 404 Permit for any action that will result in dredging or filling of waters of the United States. This act requires demonstrating that there is no avoidance alternative.
- Executive Order 11990 (wetlands) — requires early public involvement and a very deliberate review process for wetlands. A key principle in the process is that 404 Permits are only to be issued for the "least environmentally damaging practical alternative." A project cannot result in any net loss of wetlands area or values.
- Executive Order 11988 (flood hazards) — requires analysis of floodplain encroachments and requires "only practicable alternative" finding to support any project that will result in a significant encroachment or a significant incompatible floodplain development.
- Clean Air Act of 1990 and subsequent amendments — require that a non-exempt project (in a nonattainment area for certain pollutants) must be included in the Regional Transportation Plan which is found to conform to the State Implementation Plan (SIP). The SIP is composed of the EPA-approved Regional Air Quality Attainment Plan.

Alternative Studies

Environmental studies are performed for all viable alternatives (see Chapter 8 – Overview of Project Development, Section 6). The environmental effects and possible required mitigation are quantified to assess the feasibility of each alternative.

Responsibility of Project Development Team

The PDT has the responsibility to direct and evaluate the project studies, to determine if any project rescoping is needed, and to develop new alternatives, if required. When consensus is reached, the PDT determines the appropriate level of environmental evaluation. If an environmental document is required, the PDT directs its preparation.

Notice of Preparation / Intent

If the PDT determines there is the potential for significant environmental effects and that preparation of an EIR/EIS is required, the District Environmental Unit prepares and distributes a notice of preparation as required by the California Environmental Quality Act (CEQA) and requests FHWA to issue a notice of intent as required by the National Environmental Policy Act (NEPA). Refer to the *Standard Environmental Reference* for current instructions.

Continuous Environmental Involvement

Environmental involvement should continue throughout the entire project development process. During the design phase, in construction, and during maintenance activities, decisions must consider environmental concerns.

The above discussion highlights important environmental requirements. For additional information, please refer to the *Standard Environmental Reference*.

SECTION 4 Identifying Project Alternatives and Mitigations for Impacts

General

Caltrans subscribes to what can be called a "plan-to-ground" philosophy in its approach to environmental analysis and project development. This plan-to-ground philosophy calls for the separate and independent evaluation and discussion of each viable project alternative, covering only its own specific impacts upon its surrounding environment. This philosophy is intended to develop a draft environmental document (DED) that avoids comparisons between alternatives.

The comparison between alternatives ("plan-to-plan" philosophy) is reserved for the later evaluation process where a preferred alternative may be offered, and where the comparisons may be used as an evaluation tool by the ultimate decision-maker.

The objective at this stage of alternatives analysis is to enter the public review process with a bias-free presentation, such that the results of the public review process, after evaluation, will dictate the selection of the preferred alternative.

The following seven headings chart the formal project studies process to develop viable alternatives for the public hearing stage.

Stating the Purpose-and-need

The purpose-and-need section of an environmental document is the key to developing a document that is defensible in court. This section provides the foundation for identifying the full range of possible alternatives, and determining which of these alternatives are reasonable.

When preparing this section, it's important to have early identification of the potential environmental issues and a general knowledge of the associated regulatory requirements. This is beneficial because the purpose-and-need section must not only substantiate the project as a whole; it must also justify each of the resulting significant environmental impacts, uses of protected resources, and impacts on hazardous wastes.

It is important to present this section in terms readily understood by the public. Written text can be enhanced by high-quality graphics and non-technical explanations.

It is prudent to often re-examine the project's purpose-and-need statement to reflect community input, funding constraints, and the discovery of additional impacts.

The following paragraphs discuss items to be considered when developing the purpose-and-need section. The items discussed are not all inclusive. It is important that the specific objectives provide a comprehensive point of reference with which to compare possible alternatives.

Clear Project / Neutral Statement

A clear and defensible purpose-and-need is a requisite of quality project planning and development. It is the basis for making decisions. The purpose-and-need section of the environmental document must clearly demonstrate the purpose-and-need for the transportation improvement. The discussion should be presented in a project-neutral fashion against which the various alternatives can be compared. This definition of purpose-and-need will be weighed by the public and the decision-makers against the documented impacts of the project; as such, it deserves thorough analysis and discussion. The following paragraphs provide discussion on a variety of purpose-and-need approaches.

- Supporting Legislation or Commitments

  Is there a federal, State, or local government mandate for the project? —Are the local, regional, and State land-use and transportation plans based on the assumption that the project will be implemented? —Is there a history of commitment toward ultimate implementation? —Have there been elections, special legislation, or other decisions or commitments mandating consideration of the project?

- Safety

  Is the project necessary to correct an existing or potential safety hazard? —Is the existing accident rate high? —Why? —How will the project improve it? For ease of public understanding, the objective should relate to how many fewer accidents, injuries, and fatalities could be expected to occur within the project area through the design year.

- System Linkage

  Will the project provide a connecting link in the regional or area-wide system of transportation modes that would enhance utility and/or efficiency? As an example, will the project eliminate a gap between two improved portions of the system and thereby contribute to more consistent user expectations? If so, what will be the benefits to the user?

- Maintenance and Operational Deficiencies

  Are there inappropriately high maintenance costs that can be substantially lowered by the project? If so, outline the data. —Are there inappropriate user weight or size restrictions that would be eliminated? If so, what will be the benefit of removing these restrictions? —Is the existing facility in danger of partial or complete loss of service unless the project is completed? If so, what is the anticipated time frame for such loss of service?

- Demand Exceeding Capacity

  Is the capacity of the present facility adequate for the present and projected demand? For the ease of public understanding, it is necessary to explain the terms "capacity" and "levels of service." The existing and expected levels of service are to be outlined, and then compared to the minimum standards. A concept more easily understood, is "total or cumulative time delays." Accordingly, it is also appropriate to document the existing delays, how they compare to unconstrained flows, and what they are expected to be with and without the project.

  With flexible funding, demand needs to be evaluated comprehensively. For example, even if there is congestion on the State highway, it may not necessarily be State highway traffic; it could be local traffic that could be encouraged to remain on local facilities. Under these conditions, problems and solutions need to be looked at more creatively.

- Growth and Cumulative Impacts

  When discussing future demands, it is very important to be consistent with the environmental document's strategy for addressing growth and cumulative impacts. The traditional approach is to use transportation projections from, or consistent with, those of the local or regional transportation planning agency. These projections are based on the best available local and regional land-use plans. This facilitates the position that land-use development and transportation facilities are planned together. With this, the question of growth and cumulative impacts can most often be addressed in a relatively conclusive manner.

- Economic Development

  An exception to this traditional approach is where there are specific economic developments (e.g., convention centers, sports complexes, etc.) or other land use changes that are directly tied to the implementation of the proposed project. In such cases, the transportation projections and cumulative impacts should address these secondary changes.

- Eliminate Unacceptable Impacts

  Is the existing facility resulting in unacceptable social, economic, or environmental impacts that are able to be eliminated with the project?

- Financial Resources

  Are there limits to the amount of financial resources available to address the identified problems? If so, what are these limits? —Is it possible to increase these resources? If not, why not? —Can part of the purpose-and-need be addressed in a cost-effective manner within these limits?

Identifying Possible Alternatives

The following range of options is required to be addressed when project alternatives must be formally considered. See Chapter 8 – Overview of Project Development, Section 6, for more details.

Formal Alternatives

- "No Action" alternative, also known as "No Build"
- Transportation System Management (TSM) alternative, including high-occupancy vehicle (HOV) lanes in urbanized areas
- Mass transit in larger urbanized areas
- Improvement of the existing system, which may include both State and local facilities
- The full range of potentially reasonable, "build" alternatives

Limit Number of Reasonable Alternatives

When there are a large number of potentially reasonable "build" alternatives, it is only necessary to present a representative number of the most reasonable examples, covering the full range of options. Often, several alternatives are actually variations of a single alternative and would be more appropriately treated as design variations.

Impacts of Alternatives

Again, as with the development of the purpose-and-need statement, it is important to keep in mind the significant environmental impacts, uses of protected resources, and impacts on hazardous wastes that are likely as a result of the proposed alternative. This basic information will assist in identifying quality alternatives, and will improve the ability to defend the final selection process.

Eliminating Unreasonable Alternatives

Consider Only Reasonable Alternatives

When the formal consideration of alternatives is required, all reasonable alternatives should be evaluated in a comparable level of detail. The Council of Environmental Quality's "Questions and Answers about NEPA" states that:

Reasonable alternatives include those that are practical or feasible from the technical and economic standpoint and using common sense, rather than simply desirable from the standpoint of [FHWA/Caltrans].

Criteria for Rejecting Alternatives

A project alternative may be rejected as unreasonable for any of the following reasons:

- Not meeting the project's purpose-and-need
- Excessive construction cost
- Severe operational or safety problems
- Unacceptable adverse social, economic, or environmental impacts
- A combination of reasons listed above, that taken individually might not be significant—but would be significant if taken cumulatively
- Previously rejected in an earlier stage (e.g., in a regional planning process, that was documented in an environmental document)

Test for Reasonableness

The most direct test of reasonableness is: "Does the alternative meet the project's purpose-and-need?" This is one of the key reasons why the project's purpose-and-need statement is so important. Each alternative is compared to each specific objective in the purpose-and-need statement. Only those alternatives that fulfill the major objectives will be determined to have passed this test of reasonableness. However—required avoidance alternatives may still need to be carried forward if they were not eliminated in an acceptable manner in a previous environmental process.

It is important to review the reasonable "build" alternatives to insure that they are consistent with the planning or design concept and scope, or if not, to consider revising the planning or programming documents. (Refer to Chapter 8 – Overview of Project Development, Section 1.)

"First Cut" of Alternatives

It is important to recognize that this is only the "first cut" of the alternatives. At this point, adverse impacts are to be evaluated only in general terms; harm to specific protected resources should not be considered. The difficult task of weighing the relative value of, and assessing the relative harm to, the affected protected resources is simplified by delaying the process until the nonviable alternatives have been rejected: the appropriate time for such a task is during the selection process for determining the preferred alternative (see Chapter 12 – Project Approvals and Changes to Approved Projects, Section 2). For certain protected resources, if "avoidance" alternatives are available, no impacting alternatives may be allowed for consideration.

Document the Elimination of Specific Alternatives

The environmental document must briefly explain why eliminated alternatives were found to be unreasonable. Once documented, no additional consideration of such alternatives is required.

Identifying Specific Effects of Each Alternative

Each alternative under consideration is examined for its full range of environmental impacts. Special studies are undertaken that focus on the potentially significant effects. Each alternative's significant adverse effects on the environment are clearly identified and described in the environmental document.

Determine if Additional Alternatives Need to be Developed

Following completion of detailed environmental studies, a review is conducted of the project alternatives under consideration. This review is performed to re-evaluate the purpose-and-need statement, and the range and reasonableness of the alternatives.

Identifying Reasonable Mitigation Measures

All reasonable mitigation measures are identified for each adverse environmental effect expected as a result of each alternative considered. Unavoidable significant effects, if any, are documented for each alternative. Using this information, a final review is conducted to determine the type of environmental document needed. Normally this determination would be to proceed with the draft environmental impact

report/environmental impact statement (EIR/EIS). However, it could be to complete the initial studies/environmental assessment and prepare a negative declaration.

Perform Constructability Reviews

See Chapter 8 – Overview of Project Development for information on meeting constructability requirements. Summarize the results of the constructability review in the draft project report and project report.

SECTION 5 Draft Project Report

ARTICLE 1 General

Purpose of Draft Project Report

The draft project report (DPR) is a decision document. It is only used when there is a draft environmental document (DED). The purpose of the DPR is to document the need for a transportation project, to summarize key points from the DED, and to summarize the studies of the scope, cost, and overall impact of alternatives so that the decision maker can make an informed decision on whether or not to proceed to the public hearing phase of project development.

DPRs are used for Project Development Categories 1, 2, 3, and 4; they must include a DED prepared in accordance with the *Standard Environmental Reference*. DPRs are not applicable to Category 2B or 3 projects that are determined to be categorically exempt.

Authorization for Public Hearing

When a DED is required, approval of the DPR grants approval to release the DED to the public. In accordance with the project development team (PDT) recommendation in the DPR, the public may be (1) invited to a public hearing, (2) given an opportunity for a public hearing, or rarely, (3) the public hearing process may be waived altogether (but only if determined unnecessary on a Category 3 or 4 project that has no federal involvement or it is a federal categorical exclusion under the National Environmental Policy Act [NEPA]).

Authorization to Circulate Draft Environmental Document

If there is any federal involvement in a transportation project, a separate approval must be obtained to circulate the DED (see *Standard Environmental Reference*). For projects without federal involvement, approval of the DPR grants authorization to circulate the DED.

Project Approval

Project approval for Category 1 through Category 4 projects is made after: (1) evaluation of the responses to the DED, (2) completion of the public hearing process,

(3) selection of a Preferred Alternative, and (4) completion of the final environmental document (FED).

Caltrans' project approval action is recommended in the final version of the Project Report (PR) and is authorized by approval of the PR. See Chapter 12 – Project Approvals and Changes to Approved Projects, for details.

Coordination with Project Study Report

DPRs and PSRs require similar information, acquired at different points in time. The PSR is preliminary in nature and does not benefit from knowledge acquired from detailed environmental studies. When preparing the DPR, appropriate PSR data should be updated prior to its insertion into the DPR; appropriate summary data from the environmental studies should also be included.

Coordination with Project Study Report-Project Development Support

A DPR requires more information than a PSR-PDS. Since initial studies are not developed during the preparation of a PSR-PDS, formal studies may take more time to prepare and require more resources to complete as compared to a project initiated with another type of PID. When preparing the DPR, appropriate PSR-PDS data should be updated prior to its insertion into the DPR. A summary of appropriate data from the environmental studies should also be included.

Mapping and Costs

Since the DPR is used to document engineering decisions and to determine the proposals and alternatives presented to the public, it is essential that accurate mapping be used. Project costs (roadwork, structures, and right-of-way) for all project alternatives are calculated to enable a realistic comparison of alternatives.

Notify Local Agencies of Right-of-Way Needs

If the DPR is a first determination that specific right-of-way parcels may be required, the appropriate city or county planning department should be notified, in compliance with the *California Streets and Highways Code*, Section 103.65.

Approval by District Director

DPRs are approved by the District Director or a Deputy District Director who has been delegated that authority.

Submittal to Headquarters Division of Design

After approval, one copy of the final document should be forwarded to Office of Project Development Procedures.

Approval of Changes

Once a project is programmed in a programming document, the project description (type of work, limits, and cost) defines the overall project scope. District Directors are responsible for project delivery (including approval of changes up to certain thresholds). When any threshold is exceeded, Headquarters' approval of the change is required before a new cost, scope, or schedule will be proposed to be included in the programming document (see Chapter 6 – Project Cost, Scope, and Schedule Changes).

See Chapter 12 – Project Approvals and Changes to Approved Projects, Section 6, for a discussion on revisions to approved PRs.

ARTICLE 2 Format and Content

General

A DPR contains the documentation and data necessary to support a public hearing discussion of the proposed alternatives. Most of the people who read the DPR will not be familiar with the proposal; therefore, the information in the DPR should be of sufficient depth and scope to provide evidence to the reader that there is a need for a project.

All DPRs should answer these three basic questions:

- Why do it at all? (need for project)
- Why do it now? (cost effectiveness)
- Which ways are practical? (alternatives)

Engineering and Environmental Data

The DPR is an engineering report. The DED, on the other hand, is not an engineering document. It is a full disclosure document, and must be attached to the DPR to provide details of the environmental studies. The DPR contains introductory and engineering material and other information that would not be appropriate in the DED, and briefly summarizes pertinent data from the attached DED. Do not unnecessarily repeat what already exists in the DED. The ultimate objective is to produce a document that secures necessary project approvals.

Project Report Outline

The PR preparation guidelines and outline are located in Appendix K – Preparation Guidelines for Project Report. They cover both the DPR and the project report, which is discussed in Chapter 12 – Project Approvals and Changes to Approved Projects, Section 3.

CHAPTER 11 – Public Hearing

Table of Contents

CHAPTER 11 – Public Hearing 11-5
ARTICLE 1 The Hearing Process 11-5
Purpose 11-5
Hearings Conducted by Other Agencies 11-5
Community Involvement 11-5
PDT Determines Strategy 11-6
Applicability 11-6
Title VI Compliance Documentation 11-7
Community Involvement Documentation 11-7
Authorization to Hold Public Hearing 11-8
Open Forum or Formal Hearing 11-8
Coordination with DED Availability 11-8
Notify Division of Design (DOD) and FHWA 11-10
Noncontroversial Projects May Use Notice of Opportunity 11-10
Withdrawal of Hearing Request 11-10
Requirements for New Hearings 11-10
ARTICLE 2 Public Notices and Publicity 11-11
Purpose 11-11
Non-English Provisions 11-11
Newspaper Requirements 11-11
Publishing Two Hearing Notices 11-11
Consult Public Affairs Office 11-11
Scope of Publicity 11-12
Methods for Publicizing Hearings 11-12
Public Notices Format 11-12
Three Standard Columns Wide 11-12
Public Notices Content 11-13
Available Material for Inspection 11-13
Notice of Joint Hearing with Other Federal Agencies 11-14
Procedures for Requesting a Hearing 11-14
Mailing the Notification 11-14
Maintain Notification List 11-14
Clippings to DOD and FHWA 11-15
ARTICLE 3 Map Showings 11-15
Timing 11-15
Public Notification Methods 11-15

Administrative Guidelines 11-15
ARTICLE 4 Briefings and Rehearsals 11-16
Briefing for District Management 11-16
Rehearsals 11-16
ARTICLE 5 Hearing Room Arrangements 11-17
Location 11-17
Room Size 11-17
Schedule 11-17
Parking 11-17
Public Transportation 11-17
Acoustics 11-18
Entrance 11-18
ARTICLE 6 Presiding Officers 11-18
Selecting a Presiding Officer 11-18
Hearings Conducted by Caltrans 11-19
Hearings for Local Projects 11-19
Letter of Confirmation 11-19
Briefing the Presiding Officer 11-20
Memo from Presiding Officer 11-20
ARTICLE 7 Open Forum Hearings 11-20
Staff Conduct 11-20
Caltrans' Preferred Format 11-20
Definition 11-21
Advance Notice of Hearing Format 11-21
Discussion-Based Room Setup 11-21
Interaction Between Staff and Public 11-21
Staffing 11-22
Facility 11-22
Greetings 11-22
Presentations 11-22
Handouts 11-22
Exhibits 11-22
Public Comments 11-23
Debriefing 11-23
ARTICLE 8 Formal Hearings 11-23
Staff Conduct 11-23
Preliminary Considerations 11-23
Try to Reduce Tensions in Advance 11-24
Room Setup 11-24
Placement of Presiding Officer and Hearing Panel 11-24
Exhibits 11-24
Audio Equipment 11-25
Seating 11-25
Consider Refreshments 11-25
Ushers 11-25
Interpreters 11-26

Recorder 11-26
Agenda 11-26
Conducting the Hearing 11-26
ARTICLE 9 Guidelines for Presentations 11-30
General 11-30
Simple and Understandable 11-30
Accessible Communication 11-30
Presentation Outline 11-31
Live Presentations 11-32
Videotaped Presentations 11-33
ARTICLE 10 Exhibits 11-33
General 11-33
Non-English and Alternative Formats 11-33
Project Need 11-34
Suggested Exhibits 11-34
ARTICLE 11 Handouts 11-34
General 11-34
Quality 11-34
Copies of Hearing Exhibits 11-35
Relocation Assistance Booklet 11-35
ARTICLE 12 Record of Public Hearing 11-35
General 11-35
Factual 11-35
Contents of the Record 11-36
Distribution 11-36

CHAPTER 11 – Public Hearing

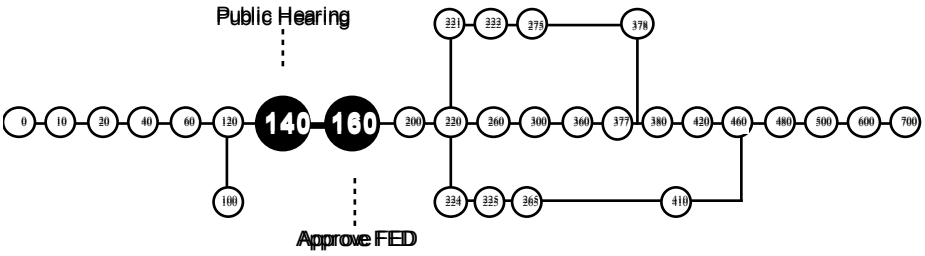

This chapter discusses the project development workflow tasks between Milestones 140 and 160. For details on these tasks, see the *Project Development Workflow Tasks Manual*.

ARTICLE 1 The Hearing Process

Purpose

The purpose of the hearing process is to obtain public comment and to ensure that transportation decisions are consistent with the goals and objectives of federal, State, and local entities. Public hearings are required for most projects with significant impacts. They provide a forum for discussing project need, major issues, alternative locations, and design features, and the potential social, economic, and environmental effects related to each.

Hearings Conducted by Other Agencies

When hearings for State highway projects are conducted by other agencies, Caltrans procedures must be followed. However, when the work on the State highway is incidental to the local improvements, the other agency may follow its own procedures, if there is no federal involvement.

Community Involvement

The public hearing represents the formal stage of community involvement: a process which began during the earliest phases of a transportation project and is intended to identify issues, goals, objectives, values, and concerns related to the project. The most productive interaction with the public and with other agencies takes place in informal meetings, conferences, and direct correspondence, rather than through formal hearings. The overall community involvement process is discussed in Chapter 22.

PDT Determines Strategy

The project development team (PDT) should develop a community involvement plan for informal meetings and contacts with potentially interested parties. For information regarding whom to contact, size of groups, details of presentation, how to make contact, etc., see Chapter 22.

Applicability

A public hearing (or the "opportunity for a public hearing") is required for any projects that:

- Require significant right of way.
- Require substantial changes to the layout, the function of connecting roadways or facility being improved.
- Have a significant adverse impact on abutting real property.
- Have a significant environmental, economic, social, or other effect.
- Federal Highway Administration (FHWA) determines that it would be in the public interest (projects with federal-aid funding or requiring federal permits only).

Public hearing applicability varies according to project category, as defined in Chapter 8, Section 5. The following stipulations apply:

Category 1 and 2 Projects

Compliance with the requirements of the public hearing process is required; it may be achieved with either a scheduled hearing or a "Notice of Opportunity."

Note: A scheduled hearing must be held for Category 1 Route Adoption hearings.

Category 3 and Category 4A Projects

Except for categorically exempt, Category 3 projects, compliance with the public hearing process is usually required. Compliance may be achieved by a scheduled hearing or "Notice of Opportunity." Waiving the public hearing process for projects in Categories 3 and 4A requires written approval from the District Director. The waiver should include the project development team's rationale for foregoing a public hearing or "Notice of Opportunity." A waiver can only be granted if there is no federal involvement or if the project is a Federal Categorical Exclusion under National Environmental Protection Act (NEPA).

Category 4B Projects

Compliance with the public hearing process is not normally required; however, the PDT should weigh the effects of the project very carefully. Even though the reconstruction is taking place within the existing right of way, impacts of sufficient magnitude may make it prudent to provide a public hearing or "Notice of Opportunity." Final determination is made by the District Director. If a federal environmental document is required, the public hearing process is required.

Category 5 Projects

Compliance with the public hearing process is not required.

Category 6 Projects

Compliance with the public hearing process is not required for emergency opening and restoration work. Permanent replacement work must be assigned the proper project category and applicable requirements should be satisfied.

Category 7 Projects

Public hearing process requirements for federal-aid projects on highways under local agency jurisdiction and not classified as Category 5 or 6 comply with the items listed at the beginning of this topic "Applicability" and are discussed more fully in the *Local Assistance Procedures Manual*.

Title VI Compliance Documentation

A Memorandum to File should be written for each formal contact. It should cover such items as where the meeting was held, who initiated it, how attendees were notified, who attended the meeting (by agency, organization, or group), content of presentations, questions and responses, conclusions drawn, etc. The attendance and concerns of minority, disadvantaged, and low mobility groups must be carefully documented to comply with Title VI of the *Civil Rights Act of 1964*.

Community Involvement Documentation

Informal contacts should be documented. This documentation should be used to determine how many hearings to hold; it also provides ongoing input into the project study process.

A brief summary of community involvement activities will need to be discussed at hearings. It should also be included in handout materials and in the Coordination Section of the environmental document.

Authorization to Hold Public Hearing

The authorization for a hearing is normally obtained by the approval of the draft project report, which must contain the recommendation to proceed with a hearing.

Open Forum or Formal Hearing

The District Director decides whether to hold a formal hearing or an open forum hearing. The decision is based on the recommendation of the PDT.

Open forum hearings are preferred to formal hearings, because they result in greater and more balanced input and are less likely to result in confrontational situations.

Formal hearings may be preferred where there is an indication that effective citizen involvement has resolved critical issues, or where there is a strong public expectation of a formal hearing. See Articles 7 and 8 for a description of the two types of public hearings.

Coordination with DED Availability

A hearing, if required, is held before committing to any alternative being considered. Public circulation and notification requirements vary depending on the type(s) of documents (California Environmental Quality Act [CEQA] and NEPA) and level of environmental documentation. The following types of draft environmental documents (DED) have specific requirements that can be found in greater detail in the *Standard Environmental Reference (SER)*.

Draft Initial Study/Negative Declaration (IS/ND) - CEQA

CEQA does not require formal hearings at any stage of the environmental review process for an IS/ND or IS/mitigated negative declaration (MND). However, CEQA does require public notice of the intent to adopt an ND or MND. As a matter of Caltrans policy, the Notice of Intent to Adopt an ND or MND must be published in the local paper. A draft IS/ND or IS/MND must be made available to the public for comment for a minimum of 30 days. For more information, see *Standard Environmental Reference* Volume 1, Chapter 35.

Draft Environmental Assessment (EA) - NEPA

When a public hearing is held as part of the application for federal funds, the draft EA shall be available at the public hearing and for a minimum of 15 days in advance of the public hearing. The notice of the public hearing in local newspapers must announce the availability of the draft EA, where it may be obtained or reviewed, as well as information on how and where to submit comments. Comments must be submitted in writing within 30 days of the availability of the draft EA unless Caltrans determines, for good cause, that a different period is warranted. For further information, see *Standard Environmental Reference* Volume 1, Chapter 31.

Draft Environmental Impact Report (DEIR) - CEQA

A DEIR must be available to the public for comment for a minimum of 45 days. Notice of the public hearing must be published in a prominent location in the newspaper, other than in the legal notices section. In practice, the Notice of Availability of the DEIR and Notice of Public Hearing or Notice of Opportunity for Public Hearing are often combined into one notice. This avoids duplication of effort and expense. See *Standard Environmental Reference* Volume 1, Chapter 36 for details.

Draft Environmental Impact Statement (DEIS) - NEPA

A DEIS must be available for a minimum of 45 days. FHWA regulations require that public hearings be held for all projects that will have a significant environmental, social, or economic effect. However, it is not mandatory that a public hearing be held after the issuance of the DEIS. Where Caltrans determines it is advisable to hold a public hearing to provide information and take comment on the DEIS, the draft document must be made available for a minimum of 15 days prior to the hearing, and the DEIS must be available at the hearing. The hearing must be publicly noticed. If no hearing is held, a notice must be placed in a newspaper advising that the DEIS is available for review and informing the public regarding how copies may be obtained and where comments are to be sent. For further information see *Standard Environmental Reference* Volume 1, Chapter 32.

For information specific to combined NEPA and CEQA DEDs, see *Standard Environmental Reference* Volume 1, Chapter 37.

Notify Division of Design (DOD) and FHWA

As soon as hearing arrangements are finalized, the district should notify the Division of Design, Attention: Public Hearing and FHWA by memo. DOD will, in turn, notify the CTC and various Headquarters offices.

Noncontroversial Projects May Use Notice of Opportunity

A "Notice of Opportunity" for a public hearing may be used to satisfy the requirement for a hearing if the project is noncontroversial and a hearing request is unlikely. This can be determined by analysis of comments received from the public or local agencies or through prior contacts and information meetings. If the project is being processed with an environmental impact statement (EIS), the FHWA liaison engineer should be contacted before proceeding with a "Notice of Opportunity."

The overriding consideration when federal funding or federal permits are involved are the items listed above under Applicability. Even if there is no environmental document, if one of those items is involved, the need for at least a Notice of Opportunity is triggered.

Withdrawal of Hearing Request

When few requests for a hearing are received after publication of a "Notice of Opportunity," district personnel should meet with the parties to explain the project and answer any questions. If the questioning parties are satisfied, they may be asked to withdraw the request for a hearing in writing. The proceedings should be carefully documented and made a part of the project record. If the requesting parties do not withdraw the request, the district must proceed with a public hearing.

Requirements for New Hearings

The PDT must continually assess changes in project location, design features, and affected area. A new hearing or "Notice of Opportunity" is required whenever there has been:

- A substantial change from the proposal discussed in the previous hearing or in the "Notice of Opportunity."
- Substantial, unanticipated changes in the affected area (land use, local plans, goals, objectives, attitudes, etc.).
- An unusually long lapse of time since the last hearing.

- Identification of significant social, economic, or environmental effects not previously considered.

ARTICLE 2 Public Notices and Publicity

Purpose

Public notices and publicity inform the public on transportation project proposals and notify the public of their opportunity to participate in the hearing process.

Non-English Provisions

In all cases where non-English speaking people are affected by a proposal, the project development team (PDT) will determine if the language barrier is sufficient to warrant special publicity in the language of those affected.

Newspaper Requirements

Each public hearing notice must be published in English in a newspaper having a general circulation in the vicinity of the proposed project, as well as in any foreign language and community newspapers with a substantial circulation in the area.

Each notice must be published in a prominent location in the newspaper other than in the legal notices section.

Publishing Two Hearing Notices

A hearing notice or a "Notice of Opportunity" for a draft environmental impact statement (DEIS) must be published at two distinct times. This is also true when one of these notices is combined with a DEIS availability notice. The first notice should be published when the DEIS is circulated. The second notice should be published approximately one week prior to the hearing or the deadline for requesting a hearing. When a DEIS availability notice is published more than 45 days prior to the hearing, publication of two separate hearing notices is required.

Consult Public Affairs Office

Where widespread public involvement is desired and public notices will be supplemented by news releases, the district public affairs office should be requested to provide assistance.

Scope of Publicity

The amount and extent of publicity given to a hearing will depend on the magnitude and complexity of the proposal, as well as on local opinion of the proposal. Special groups, such as minority, disabled, or economically disadvantaged groups, may need special publicity efforts. If a proposal is controversial, and particularly if litigation is expected, it is important to make everyone aware of Caltrans' intentions. In such circumstances, the publicity should be substantial.

Methods for Publicizing Hearings

Some of the ways to publicize an upcoming hearing include:

- Required paid hearing notices.
- Flyers or bulk-rate circulars distributed to residents.
- Notices on bulletin boards in public places (city halls, libraries, supermarkets, etc.).
- Television and radio.
- Distribution of notices through schools and service clubs.
- Indication in the draft environmental document (DED) that a hearing will be held.

Public Notices Format

Notices should be simple, eye-catching, readable, and informative. All explanations and descriptions should be easily understood by the local readers. Use local identifiers for project limits rather than engineer stations or post miles.

The basic format and content for Caltrans' public notices is shown in Appendix HH. The portions of the numbered paragraphs shown in italics are to be modified as appropriate for the particular environmental document type or public hearing process required and then inserted into the basic format shown in the example.

Three Standard Columns Wide

Each notice must be at least three standard newspaper columns wide and of an adequate length to balance the ad properly. The minimum length should be six to seven inches. For lengthy projects, consider running the notice across the page to avoid compressing the map to an unreadable scale.

Public Notices Content

- Date, Time, and Place of Hearing

  Public hearing notices or combined hearing/DED availability notices must specify the hearing date – time – place and the date the comment period ends.

- Discussion Topics
  - Tentative schedules for right of way acquisition.
  - Tentative schedules for construction.
  - Relocation Assistance Programs.

- Procedures for Public Submissions

  The notices must state that written statements and exhibits may be submitted up to 30 days after the hearing (10 days is the minimum; longer periods for controversial proposals) and must describe the procedure for the submissions. The closing date must be definitely stated but in no case will the closing date be earlier than the end of the circulation period for the DED.

- Schematic Map

  Each notice must have a schematic map showing the project limits. Schematic representations of major design features and alternatives should be shown to the extent practicable.

- Identify Project Alternatives with Impacts

  Each notice must identify any alternatives that impact wetlands or historic properties or encroach upon base floodplains.

- Identify Material Available for Inspection

  Each notice must state that maps, drawings, the DED, and other pertinent information will be available for inspection and copying at the nearest district office or some other convenient location in the vicinity of the proposed project.

Available Material for Inspection

Project base maps of all alternatives under consideration showing right of way impacts, drawings, and retouched photographs, the DED, technical engineering and environmental reports, and other pertinent information should be made available for inspection and copying at the nearest district office and at some other convenient location in the vicinity of the proposed project.

Notice of Joint Hearing with Other Federal Agencies

The National Environmental Policy Act (NEPA)/404 Memorandum of Understanding (MOU) concurrent process provides for a joint NEPA/Corps 404 hearing, if appropriate. The DED circulation and public hearing notice must be closely coordinated with the Corps 404 public notice. The potential for joint hearings with other federal agencies that have requirements for a public hearing should also be explored.

Procedures for Requesting a Hearing

Each "Notice of Opportunity" must explain the procedure for requesting a hearing and state the deadline for doing so. The deadline should not be earlier than the end of the circulation period for the DED. The notice may also state that if there are no requests for a hearing Caltrans will proceed with the design as planned.

Mailing the Notification

At or prior to the first general publication of public hearing notices and combined hearing/DED availability notices, certain affected parties should receive a mailed notification of the hearing. As long as it contains a satisfactory map and adequate project data, this notification may take the form of a postcard, a letter, or a copy of the actual public hearing notice. The mailing should include the following agencies or groups:

- Appropriate news media.
- California State Resources Agency.
- Recreation and planning agencies.
- Appropriate representatives of the US Department of the Interior and the Department of Housing and Urban Development.
- Others shown on Caltrans' Public Involvement Notification List (see the *Standard Environmental Reference*, Chapter 4, Exhibit 1).
- Other groups, agencies, or individuals who by nature of their function, interest, or responsibility may be interested in or affected by the proposal.

Maintain Notification List

The districts will establish and maintain a notification list upon which any federal agency, local official, public advisory group or agency, civic association, community group, or individual may enroll to receive notices of proposals in a specified area. Particular effort should be made to seek out and enroll minority leaders and

representatives of economically disadvantaged and low mobility groups as well as other organizations that represent individuals/groups with disabilities.

Clippings to DOD and FHWA

As proof of publication, each notice will be sent to the Division of Design, Attention: Public Hearing, and the Federal Highway Administration (FHWA), as soon as it is published. DED availability notices and final environmental impact statement (EIS) approval notices will be sent to the Division of Environmental Analysis and the FHWA.

Proof of publication should include a clipping or clear copy of the notice published in the major newspaper, along with a list of the other publications used. The list should include each publication's name and the publication date. The listing should identify foreign language and community newspapers.

ARTICLE 3 Map Showings

Timing

If a formal hearing, rather than open forum hearing is being held, it is generally a good idea to have a map showing prior to the hearing (or opportunity). Due to the lengthy nature of project studies, the map showing may be the first time some people become aware of the proposal. The purpose of the map showing is to provide the public with a preview of the proposal: allowing an opportunity to view the maps and data and to participate in questions and answers on an individual and unhurried basis.

Public Notification Methods

Notification of the map showings may be by separate news releases, paid advertisements, or by inclusion in the Notice of Hearing (or opportunity). The notification should clearly state the location and time of the map showing.

Administrative Guidelines

- Schedule more than one day and extend from the day into the evening hours.
- Locate in areas convenient to those affected. This may require more than one showing, held at different locations. In such a case, the use of a mobile van should be considered. —Is the site easily found?—Is adequate parking available nearby?

- Consider facility size and accessibility, particularly for the physically challenged or aged. Temperature control is also important, since it is difficult to maintain interest and composure in an abnormally hot or cold room.
- Staff personnel should be acquainted with the area and the proposal. There is no substitute for the understanding and familiarity of a "native."
- Provide appropriate functional experts: right of way, environmental, engineers, etc. Specific problems may dictate the use of specialists.
- Provide appropriate foreign language speaking personnel and interpreters for the deaf, as necessary.
- Supply a sufficient number of adequate maps and handout materials, such as draft environmental document (DED), Relocation Assistance Program booklets, planning process booklets, etc. Visitors may wish to take the materials home.

ARTICLE 4 Briefings and Rehearsals

Briefing for District Management

Before setting a date for the formal hearing, the project development team (PDT) should bring district management up to date on studies, likely reactions to the draft environmental document (DED), possible litigation or controversies, etc. The briefing is a good time to make a recommendation to the District Director for the presiding officer at the public hearing.

Rehearsals

One or more rehearsals should be conducted two to three weeks prior to a hearing or at the beginning of a series of meetings where controversy is expected. An audience of non-engineering personnel or those who have participated in a recent district hearing should participate in a dry run: asking questions, making statements, and reviewing and commenting on exhibits and handouts. Hearing room and exhibit area conditions should be simulated as closely as possible, including the time of day, in order to verify the visibility of slides and exhibits, seating arrangements, etc., and to eliminate as many problems as possible prior to the actual hearing.

ARTICLE 5 Hearing Room Arrangements

Location

The location selected should be close to the project area and should be easily accessible to those expected to attend.

Room Size

The room should be large enough to accommodate the expected attendance. It is better to have a large room only partially used than to have people unable to get into the meeting room—particularly for controversial proposals. Open forum hearings require less room than formal hearings. Availability of space for those with disabilities should not be overlooked.

Schedule

Hearings should be scheduled at times convenient to those involved. Open forum hearings should start at mid-afternoon and run until 8:00 p.m. Since most people work during the day, the evening is the most convenient time for them to attend a formal hearing. Therefore, formal public hearings should be held after 7:00 p.m., unless there are extenuating circumstances. Written approval for an exception to an evening meeting must be obtained from the District Director.

Parking

Adequate parking is an important element of site selection, since poor parking availability discourages attendance. Staff cars should be parked away from the entrance so the most convenient parking is available for the public. Parking for individuals with disabilities should also be available at the site.

Public Transportation

Try to select a site near public transportation and publicize the public transportation access in the public notices.

Acoustics

While acoustics are usually not a major problem, they may be if a large building, such as a fair building or a gymnasium, is chosen for a formal hearing. If the audience is unable to hear properly, the usefulness of the hearing is greatly diminished.

Entrance

In large complexes, such as local community centers or schools, the hearing room may be difficult to find. Directional signs should be placed that lead from the main points of access to the hearing room. Wherever there is a possibility of going the wrong way, a sign should be placed giving the proper direction.

The entrance should be set up so that all attendees enter through a single area. This makes it easier to assure that everyone receives appropriate information and directions.

The entrance should be attended by district personnel throughout the hearing and handouts should be given to those entering the hearing room.

ARTICLE 6 Presiding Officers

Selecting a Presiding Officer

Presiding officers are responsible for conducting formal hearings and are not used at open forum hearings. The presiding officer may or not be an employee of Caltrans. Caltrans hearing officers are likely to be familiar with the transportation project as well as with the Caltrans hearing process; in addition, no formal arrangements are required for their services.

On the other hand, non-Caltrans hearing officers may appear to be more impartial, since they are not responsible for answering questions about the proposal nor are they expected to take sides. They may more successfully limit testimony of a repetitive or irrelevant nature during long hearings.

Impartiality may be attained by using either a non-Caltrans State employee or a Caltrans employee from a district not directly connected with the proposal or the responsible branch. The presiding officer does not make presentations or answer questions, but refers matters to appropriate staff members.

Hearings Conducted by Caltrans

The District Director selects presiding officers for hearings conducted by Caltrans. As a general policy, outside presiding officers should be considered wherever projects may become controversial, are located in a sensitive area or area of critical concern, or are or may become the subject of litigation.

State Personnel Board procedures require that a State employee be used whenever an appropriate classification exists and personnel are available. Unless an exception is granted (see below), request the assignment of outside hearing officers from:

Calendar Clerk
Department of General Services
Office of Administrative Hearings
501 J Street, Suite 230
Sacramento, CA 95814-2326

Arrangements may be made by phoning the Calendar Clerk at CALNET, 473-0619 or 485-4926. Requests for assignment should be made at least four to six weeks prior to the hearing.

Exception Process—If the hearing could be better handled by a prestigious member of a local community, requests for exception to the above procedure should be made through the district personnel office, early enough to allow assignment of a General Services hearing officer if the exception request is denied by the State Personnel Board. Such requests must clearly state the reasoning for an exception.

Hearings for Local Projects

Where another agency is conducting the hearings on a project affecting State highways, that agency will select the presiding officer and make arrangements regarding compensation, etc. The district should be prepared to make a recommendation to the local agency regarding a presiding officer, especially where the agency has little experience with Caltrans' processes.

Letter of Confirmation

Once the outside presiding officer has accepted, a letter of confirmation should be sent as soon as possible (see Appendix HH). The letter should provide details of hearing arrangements, prehearing meetings, and any other information that may be helpful. Such information may include project handouts, environmental documents,

assessments of the probable attitude of the hearing audience, identification of controversial issues, and any other information that will allow the presiding officer to operate more effectively.

Briefing the Presiding Officer

Prior to the hearing, the presiding officer should be briefed on the meeting room arrangements and organization, suggested order of speakers, time limitations and constraints, suggested opening remarks, identity of staff persons responsible for each particular technical area, suggested closing remarks, etc.

Memo from Presiding Officer

The presiding officer should be asked to send the district an informal memo that describes the officer's reactions to the hearing process. Such a request should clearly state that both the memo and its contents are at the discretion of the presiding officer. Items for comment include: prehearing activities, hearing room organization, presentations, exhibits, answers to questions, suggestions for improvements, general concerns regarding the proposal, etc.

ARTICLE 7 Open Forum Hearings

Staff Conduct

Caltrans staff members should remain cordial and professional, no matter how heated the discussion becomes at the public hearing. Even the slightest display of anger or insult, no matter how well justified, will negatively impact both Caltrans and the project. In preparing for a hearing, staff should be told that there is a rule: "You may not get angry."

Caltrans' Preferred Format

Open forum hearings generally result in better communication with affected interests than do formal hearings. Open forum hearings provide an opportunity to discuss projects and proposals in a less emotional atmosphere. By allowing a less formal interaction between Caltrans staff and the public, it tends to reduce the number of questions that must be answered formally in the hearing record. For these reasons, the open forum is Caltrans' preferred hearing format.

However, a formal hearing may be used if a small attendance is expected and relatively few items of controversy will be discussed.

Definition

Open forum hearings are informal meetings where members of the public may meet individually with Caltrans staff members to discuss proposed projects or proposals. They resemble map showings or open houses, except that formal testimony is taken by a certified court reporter or statements for the record are handwritten/recorded on electronic media. Presentations are shown on open captioned videotape, or material is presented in exhibits and handouts.

Members of the public may drop in at their convenience, generally from mid-afternoon through evening hours, to look at displays, watch presentations, ask questions, discuss proposals, and make formal statements.

Advance Notice of Hearing Format

When the hearing is an open forum, all affected parties must be provided advance notice that such a format will be used.

Discussion-Based Room Setup

Discussion areas should be distributed about the hearing room. The areas may be organized by functional disciplines (e.g., environmental, right of way, and design) or by project alternatives, with several disciplines available to discuss each. Separate stations for special issues may also be used. A station for public comments should be clearly marked.

Interaction Between Staff and Public

Interaction is central to the concept of open forum hearings. Staff members should fully understand the project or proposal, since questions will often be highly detailed. Members of the public are likely to ask the same question of different staff members. Even slightly different answers may result in distrust. Care should be taken not to mislead members of the public into thinking that the most popular alternative will be chosen.

Staffing

Caltrans' district management and staff, including the project manager and project engineer, should attend the hearing. The district should designate and clearly identify the individual in charge of the hearing.

Facility

A facility should be chosen that is adequately sized for the anticipated audience. In general, an open forum hearing will not require as much space as a formal hearing, since people are able to come and go throughout the hearing.

Greetings

Members of the public should be welcomed at the door, asked to sign in, given handouts, and advised of the nature of the open forum hearing. Members of the public should be directed to make formal statements to the certified court reporter, but that questions should be directed to Caltrans staff. This will reduce the number of necessary written responses to questions and shorten the comment process.

Presentations

Open forum presentations should be on open captioned videotape. Live presentations can result in confrontational situations. For more information, refer to Article 9, "Presentations."

Handouts

Handouts should be provided as people enter the hearing room. The handouts should be easily understood and clearly describe the format of the open forum hearing. (See Article 11, "Handouts.") Related documents (draft environmental document [DED], etc.) should be clearly marked and available for inspection in a prominent place. Handouts and related documents should be made available in alternative formats or by using alternative methods, if requested.

Exhibits

Exhibits should be very accessible to the meeting participants and take into account accommodations necessary to make the meeting accessible to individuals with disabilities. They should be set up at least one hour before the hearing. Staff

members should be available to answer questions and give assistance. For more information, refer to Article 10, "Exhibits."

Public Comments

Members of the public should be advised that questions will be answered informally by staff, but that questions entered into the record through the court reporter, or tape recorder, or in writing will be answered in writing and entered into the official hearing record.

Individuals wishing to make public comments may:

- Make oral comments to a certified court reporter or tape recorder.
- Drop written comments into a comment box.
- Write to a designated Caltrans staff member. Districts should provide an addressed, postage-stamped comment card or sheet for this purpose.

Debriefing

Soon after the open forum hearing (preferably the next day), Caltrans staff members that attended the hearing should meet to identify issues or ideas that were discussed at the hearing but may not have ended up in the public record transcript. This is important since most of the hearing is conducted informally by staff members.

ARTICLE 8 Formal Hearings

Staff Conduct

Caltrans staff members should remain cordial and professional, no matter how heated the discussion becomes at the public hearing. Even the slightest display of anger or insult, no matter how well justified, will negatively impact both Caltrans and the project. In preparing for a hearing, staff should follow the rule: "You may not get angry."

Preliminary Considerations

The conduct of formal hearings will vary, depending on who is conducting the hearing (Caltrans, local agency, or joint team) and who is presiding over the hearing (Caltrans staff member or outside officer). This discussion is directed primarily to a formal Caltrans hearing with an outside presiding officer. If a hearing is being conducted by others, project team members should be available for questions. Team

personnel should also assist in presentations and participate in other portions of the hearing, as required.

Try to Reduce Tensions in Advance

Formal hearings tend toward confrontation. Everything possible should be done to reduce tensions in advance of the hearing. If individuals are likely to make emotional presentations, informally speak with them in advance, provide them with information about the hearing, and discuss the issues.

Room Setup

Generally, formal hearings are held in large rooms, with the hearing officer and panel at the front, facing the audience. It is best to place the microphone for public comment on a table and allow those testifying to sit down. As necessary, accommodations should be provided for individuals with disabilities.

Placement of Presiding Officer and Hearing Panel

The presiding officer conducts the hearing and maintains order. The officer must be readily identifiable, and should be seated in a prominent location. It is neither necessary nor desirable for the hearing panel to be within whispering distance. The presiding officer should, therefore, be seated away from the panel and slightly elevated, if possible. The hearing panel should be seated at the same level as the audience and should be visible to all members of the audience.

If the room is darkened for slide presentations, small table lights should be provided for the presiding officer and the panel.

The number of district and local agency personnel seated in front and facing the audience should be carefully controlled. Since most staff members speak infrequently during the hearing, consideration should be given to having only one or two responsible district and local agency staff seated up front. The remaining hearing panel should be seated in the front row of audience seats where they will be easily available for introductions, presentations, and answering of questions.

Exhibits

Exhibits (See Article 10) should be readily accessible to the meeting participants and take into account accommodations necessary to make the meeting accessible to

individuals with disabilities. Consider placing them in a separate lobby where they may be viewed before, during, and after the hearing.

Exhibits should be set up at least one hour before the hearing. Project personnel should be available to answer questions and give assistance. Many questions will be answered this way before the hearing even begins. These answers are often more meaningful to the public. Good exhibits and displays can help individuals answer many of their own questions.

Audio Equipment

Audio equipment should be in place and checked out before beginning the hearing. Equipment malfunctions are disturbing, disruptive, and unnecessary.

The microphone used by the public should be placed at a table such that the speakers can be seated while addressing the panel. As necessary, accommodations should be provided for individuals with disabilities.

Seating

If seating is not fixed, chairs should be arranged so that rows do not contain more than five or six seats. This allows people wishing to speak or leave the room to do so without having to disturb too many others.

Consider Refreshments

If the hearing is expected to be lengthy, it may be appropriate to provide refreshments.

Ushers

Sufficient personnel should be on hand to staff the entrance adequately, assist and answer questions at exhibits, distribute and gather comment cards, etc., and assist the presiding officer and the hearing panel.

Ushers should be selected from project development personnel. In the event of a large hearing, additional assistance may be required from other functional disciplines.

Ushers should be prominently identified with appropriate name badges. They should know their assignments ahead of time. They should be instructed on how to refer

certain questions; how the public may obtain copies of reports, and on other ways to assist the individuals attending the hearing.

Interpreters

Prior to the hearing, the project development team (PDT) will determine if interpreters are needed for non-English speaking individuals or individuals with hearing impairments and provide them if appropriate. When used, interpreters should be available before, during, and after the hearing.

Recorder

Transcript arrangements vary, from use of a certified court reporter, to tape recording the hearing and having district personnel transcribe the tapes. Whichever method of hearing the district selects, arrangements should be made early enough to assure that the transcript will be produced within a reasonable length of time, normally within three weeks of the hearing.

Agenda

The agenda should include the following:

- Staff presentation of project features; relocation; and social, economic, and environmental effects.
- Recess: during which attendance cards may be filled out (name, address, questions, statements, a request to speak).
- Presentations.
- Comment and question period.

Conducting the Hearing

Step-by-step procedures are described below.

Opening Remarks

The presiding officer should open the hearing at the announced time. The officer's opening remarks should generally include the following:

- A "Welcome" and general instructions regarding the use of the meeting room.
- A self-introduction, to include officer's occupation, city or area of residence, etc.

- An announcement that Caltrans is holding the hearing to present its studies on the location and/or design features of the proposal to provide a forum for public discussion of the major features, including social, economic, and environmental effects.
- An announcement that Caltrans is holding the hearing before committing to any project alternative, and that no final decisions will be made until the public record has been analyzed (including information gathered at the public hearing or received in response to the environmental document).
- An announcement that invitations to the hearing have been published in local newspapers and extended in writing to legislators, the Federal Highway Administration (FHWA), the board of supervisors and/or the city council, and other appropriate public and private agencies and individuals.
- An introduction of officials and dignitaries present, such as: congressmen and legislators or their representatives; local agency officials; FHWA representatives, etc.
- An introduction of the hearing panel members and other appropriate staff.
- To enhance visual recognition, people should be asked to stand as they are being introduced.

Describe the Post-Hearing Process

Discuss relevant sequence of events that will occur after the hearing:

- Project decisions will not be finalized until all relevant information from the hearing process has been considered.
- Written statements and exhibits should be submitted in writing to the District Director at the address given in the handout. The final date for submission should be specified (a minimum of 10 days; longer periods for controversial proposals).
- After the hearing, and before approval by Caltrans or the Federal Highway Administration (FHWA), all data gathered at the hearing or submitted for the public record will be made available for inspection by the public. The data may be copied at the district office or another specified location.
- After Caltrans has made its decision on the proposal, approval will be requested from the FHWA, if appropriate.
- For freeways or controlled access highways, agreement with affected local agencies on major design features will be formalized by execution of a Freeway Agreement.

Presentations

The Hearing Officer should now turn the hearing over to staff for presentations. Presentations at formal hearings should be live. They should cover items not found in

the documents distributed to the audience, as well as important items or issues already contained in the handout material.

Presentations should cover necessary points in about 20 minutes. If longer presentations are necessary, they should never exceed 30 minutes. To shorten presentations, present detailed information in handouts and in the draft environmental document (DED), which should be available for inspection or distribution. The availability of the DED should be announced and the document explained. For more information, refer to Article 9 on "Presentations."

Hearing Officer Reassumes Command

After presentations have been completed, the hearing should be turned back over to the Hearing Officer.

Recess

The Hearing Officer should announce a recess, during which time people may look at displays and ask questions of Caltrans staff. The officer should announce the duration of the recess and should repeat instructions to fill out comment cards.

During the recess, Caltrans personnel should be available at exhibits and displays to informally answer questions.

Reconvene and Gather Cards

After the Hearing Officer calls the hearing back to order, the ushers should gather comment cards as quickly as possible.

Establish Time Limits for Testimony and Questions

If there is a large turnout, the Hearing Officer may consider limiting time for each speaker and requesting persons whose point or question has already been made to relinquish their turn or summarize their comments. However, limiting the time for discussion at small hearings serves no purpose and may antagonize attendees. Time limits should be announced by the Hearing Officer along with an explanation that if there is sufficient time later, reconsideration will be made. Once time limits have been announced, they should be impartially applied to all speakers.

Speaking Order

- Federal elected or appointed officials (or their representatives).
- State and local officials (elected or appointed).
- Representatives of groups.
- Individuals.

This order is not mandatory. If, during lengthy or controversial hearings, such an order appears to be offensive, it may be better to take speakers in random order.

Speaker Identification

The Hearing Officer should ask the speakers to identify themselves by name and affiliation. The audience should be directed to not interrupt a speaker, so the court reporter will be able to get a complete record of the hearing.

Answering Questions

If practical, decide in advance which panel members will receive certain questions and comments. As many of the panel members as possible should respond to avoid the appearance that a single individual is dominating the response. It is preferable for the Hearing Officer to directly address individual panelists, rather than to allow the panelist to decide who will answer the question.

Answers to questions should be candid, even when they may be unfavorable to the project or proposal. If an answer isn't known, there should no hesitancy in assuring the speaker that the matter will be researched and a follow-up answer provided by mail or in person.

Wherever possible, answers to individual questions should be given in front of the general audience. The audience does not benefit if matters of general concern are discussed privately after the hearing.

Provide Clarification, Not Debate

Panel members should not debate with speakers; however, misrepresentations or false statements that go uncorrected are likely to be accepted as fact by many in the audience. While there is little purpose in correcting minor points, major issues should be clarified, tactfully, at the earliest opportunity.

One More Opportunity for Testimony and Questions

Before closing the hearing, the Hearing Officer should indicate that anyone still wishing to speak may now do so; that the earlier limitation on speaking time was not intended to stop anyone from speaking, but rather to assure that everyone would have a reasonable opportunity to do so.

Hearing Summary and Recap of Follow-up Activities

After it is clear that no one else wishes to speak, the Hearing Officer should briefly repeat the sequence of events that follow the hearing, reiterate how long the public record will remain open, identify where written testimony may be sent, indicate that staff will be available after the hearing for questions, and thank the host for the use of the meeting room and the people for attending.

ARTICLE 9 Guidelines for Presentations

General

Live or open captioned videotaped presentations, exhibits, and handouts should work together to tell the story of a project or proposal. They should fully describe both positive and negative effects.

Simple and Understandable

Materials should be simple, clear, and understandable. They should be current and accurate. Inadequate maps, misleading or one-sided graphs, poor quality reproduction, or overuse of jargon may create a bad impression or convey erroneous information.

Accessible Communication

The project development team (PDT) will determine if accessible communication needs to be addressed. For example, they will determine if interpreters are needed for non-English speaking individuals or individuals with hearing impairments and provide them if appropriate. When used, interpreters should be available before, during, and after the hearing.

Presentation Outline

All presentations (live or videotaped) should cover the following:

- Problem

  Current and future demand, congestion, safety, structural or other problems in quantitative terms. Use the "no project" alternative to illustrate what the public will get if the proposed project is not constructed.

- Caltrans' Responsibility

  Caltrans' mission and responsibility, and any specific legislation or code section directing Caltrans to deal with the problem.

- Project Development Process

  The Caltrans project development process, using schematic diagrams or simple flowcharts to show the following:

  - Relationship to the local planning process.
  - Other procedural steps required.
  - Assumptions governing studies.
  - Kinds of studies being conducted.
  - Tentative project schedules.
  - How project alternatives were chosen.
  - Project alternatives.

- Major Issues

  Important community issues or significant impacts, including, but not limited to the following:

  - Regional and community growth, land use, economic activity, employment gains and losses, and community or neighborhood cohesion.
  - Consistency with local transportation plans.
  - Consistency with air quality plans, noise standards, and federal or State water standards.
  - Conservation and preservation, general ecology, wildlife and waterfowl areas, wetlands or base floodplains.
  - Disturbance of hazardous materials.
  - Public facilities and services, including park and recreational facilities, natural or man-made historic places, religious, educational facilities, public utilities, fire protection, and other emergency services.
  - Aesthetic and other values, including visual quality such as view of the road and view from the road, natural landmarks, and joint development and multiple use of space.

- Public access to rivers over which a new bridge may be constructed.
- Displacement of people, business and farms, and relocation assistance.
- Right of way requirements, schedule of acquisition, housing availability, and the Relocation Assistance Program.
- Questions on individual parcels should be addressed with the interested party outside of the formal hearing.
- Other issues associated with the proposal. Issues or effects not covered in handouts or displays must be covered in the presentation.

Caution: Do not leave out the negative impacts or controversial issues raised by members of the community.

- Describe the Proposed Project and Alternatives

  The project description may include:

  - Type of facility.
  - Ultimate number of lanes, if a highway.
  - Ultimate median width.
  - Right of way width for main line.
  - Local streets to be separated, connected, or altered.
  - Pedestrian or railroad separations.
  - Location of frontage roads.
  - Noise attenuation.
  - Truck inspection/weigh and agricultural inspection stations.
  - Roadside rest areas.
  - Nonmotorized transit and park-and-ride lots.
  - Costs for right of way and construction.
  - Connections with other modes of transportation.
  - Accommodation of transit facilities, such as median rail lines.

Live Presentations

Presentations at formal public hearings should be live. They should be as brief as possible.

Use an outline rather than a prepared text. Presentations are much more effective if presented in a natural manner rather than being read verbatim from a prepared text.

Presentations may be made with the aid of wall type exhibits at smaller hearings, and slides or direct reference to exhibits in the handouts at larger hearings. Care should be taken not to introduce too much detail into the presentation or the exhibits.

A laser or flashlight with an arrow-shaped aperture is effective in dimly lit rooms, regular pointers in brighter rooms. The room should be checked carefully to assure that the entire audience will be able to view the displays.

Videotaped Presentations

Presentations at open forum hearings should be videotaped and open captioned. They should be repeated continuously. They should cover the necessary points in 10 to 15 minutes.

Elaborate music, expensive camera shots, or celebrity narrators can create the impression that Caltrans is trying to "sell" something. Simple and factual presentations are far more effective. Wherever possible, illustrate points with visuals, just as with a live presentation.

ARTICLE 10 Exhibits

General

Live or open captioned videotaped presentations, exhibits, and handouts should work together to tell the story of a project or proposal. They should fully describe both positive and negative effects.

In general, exhibits should:

- Be appropriately sized. If they are used in presentations, they should be readable from across the room.
- Be easily understood, not requiring explanation.
- Tell the full story, not just one side of the story.

Serious consideration should be given to preparing new and original displays specifically for the public hearing process.

Non-English and Alternative Formats

The project development team (PDT) will determine if the language barrier is sufficient to warrant that exhibits be developed in the language of those affected in addition to English or in alternative formats to aid those individuals with disabilities to fully participate in the meeting.

Project Need

Graphics should show current and future demand, congestion, safety, structural, or other problems in quantitative terms. Use the "no project" alternative to illustrate what the public will get if the proposed project is not constructed.

Suggested Exhibits

Illustrate major features and alternatives for the proposal to be discussed at the public hearing. Suggested exhibits include the following:

- A geometric typical section showing ultimate median width, number of lanes, and right of way width.
- A plan of development showing alternative alignments (horizontal and vertical), if any, and alternative major design features.
- An exhibit map of the general plan of the community, with the proposal superimposed.
- Artists' renderings, models, maps, and photo retouches at critical control areas or points.
- Oblique aerial photos, with overlays to illustrate different conditions.
- Schematic geometric designs of interchanges and other major design features.
- Appropriate environmental and right of way exhibits.
- Schematic diagrams or simple flowcharts showing project costs, schedules, and significant milestones.

ARTICLE 11 Handouts

General

Live or open captioned videotaped presentations, exhibits, and handouts should work together to tell the story of a project or proposal. They should fully describe both positive and negative effects.

Quality

Handouts should be of the same quality as described for exhibits. They should follow the same outline described in detail in Article 9, "Presentations." In brief, the following should be described:

- The need for the project or proposal.
- Caltrans' legal responsibility for meeting the need.

- The process by which Caltrans has addressed the problem.
- Issues of concern to the community.
- A description of the project or proposal.

Copies of Hearing Exhibits

Handouts should include legible copies of exhibits used in the hearing, particularly for formal hearings, so that members of the audience may follow along on handouts rather than straining to see an exhibit located some distance away. Handouts may also be required in alternative formats to aid those individuals with disabilities to fully participate in the meeting.

Relocation Assistance Booklet

The standard booklet on relocation assistance may be distributed at or prior to the hearing. The more complete a handout is and the earlier it is distributed prior to the hearing (by mail or at information centers), the less time will be spent answering routine factual questions, and the more time can be spent addressing issues.

ARTICLE 12 Record of Public Hearing

General

The record of public hearing will generally be in one volume. Where the hearing record is very large, it may be subdivided into more than one part. One thicker volume is preferred to several thinner ones.

The record should be self-sufficient and should be bound with a durable cover. It should be assembled so that the pages lie flat or nearly flat for convenient reading. The record is distributed to outside parties not having ready access to other reports and data; its quality should reflect its preparation by a high-quality professional organization.

Factual

The record is to be factual. It is not to contain conclusions or recommendations; such are to be included with the project report.

Contents of the Record

The record of public hearing should contain a transcript of the hearing, copies of handouts and reproductions of exhibits, copies of documents submitted for the record, responses to questions not answered in the transcript, and copies of notices, invitations and publicity. See Appendix HH for a sample of the title page and a discussion of the contents. Alternative formats should be made available or alternate methods of communication should be used to assist individuals with disabilities, if requested.

Distribution

The record should be distributed within 60 days of the hearing. It should not be held in the district pending completion of other reports.

The district should distribute one copy of the record to each of the following:

- Each affected city and county.
- Federal Highway Administration (FHWA) (if Federal-aid or federal approval involvement).
- Division of Design (DOD), Attention: Public Hearing.
- Environmental.
- Director of Caltrans (only projects involving route adoptions).

An adequate number of additional copies should be stocked to respond to outside requests. With the exception of other public agencies, these additional copies should be distributed on a reimbursement basis. In some instances, the transcript portion alone may be requested.

The actual cost of the copy, or the cost of reproducing a copy, should be charged. In addition, the cost of mailing should be charged for all copies on which mailing is requested.

CHAPTER 12 – Project Approvals and Changes to Approved Projects

Table of Contents

CHAPTER 12 – Project Approvals and Changes to Approved Projects 12-3
SECTION 1 General 12-3
Reference Information 12-3
Various Reports Can Approve a Project 12-3
Project Approval 12-3
Approvals by Other Entities 12-3
Changes to Approved Projects 12-4
Preferred Alternative 12-4
SECTION 2 Selecting a Preferred Alternative 12-5
Selection Timing 12-5
Selection Decision and Approval 12-5
Justified Unavoidable Impacts 12-6
Reasonable Alternatives 12-6
Gain Consensus 12-6
Avoidance Alternative 12-6
Environmentally Preferred Alternative 12-7
Overriding Considerations 12-7
Balancing Resource Impacts 12-7
California Transportation Commission Involvement 12-7
SECTION 3 Project Report Approves Projects 12-8
ARTICLE 1 General 12-8
Purpose of the Project Report 12-8
Draft Project Report 12-8
Environmental Document 12-8
Project Report Content 12-8
Categorically Exempt/Excluded Projects 12-9
Format and Guidelines 12-9
Requests for Headquarters Division of Design Review 12-9
Project Report Approval 12-9
Processing 12-9
ARTICLE 2 Documenting the Preferred Alternative 12-10
Project Report and Final Environmental Document Roles 12-10
Project Report Documentation 12-10
ARTICLE 3 Caltrans' Project Approval Process 12-11

Approvals by Other Entities 12-11
Preliminary Sign-off 12-11
Approval 12-12
SECTION 4 Other Caltrans Reports that Approve Projects 12-13
General 12-13
Project Scope Summary Report for Rehabilitation Projects 12-13
Project Report for Planting and Irrigation Projects 12-13
Project Report for Safety Roadside Rest Area Projects 12-13
Project Study Report-Project Report for
Certain Special Funded Projects 12-14
Permit Engineering Evaluation Report for
Encroachment Permit Projects 12-14
Projects Sponsored by Others 12-15
Project Report for Minor A Projects 12-15
Expenditure Authorization Project Report for Minor B Projects 12-16
Director's Order for Urgent Projects 12-16
Projects Off the State Highway 12-16
Project Report for Capital Preventive Maintenance Projects 12-17
Expenditure Authorization Project Report for Maintenance Projects 12-17
SECTION 5 Federal Highway Administration and
California Transportation Commission Approval of Projects 12-18
Federal Participation 12-18
Federal Highway Administration Approvals 12-18
Federal Highway Administration Location and Design Approval 12-19
California Transportation Commission Approvals 12-20
SECTION 6 Changes to Approved Projects 12-21
Major/Minor Change Determination 12-21
Minor Changes 12-21
Major Changes 12-21

CHAPTER 12 – Project Approvals and Changes to Approved Projects

SECTION 1 General

Reference Information

Some of the references found in this chapter have hyperlinks that connect to Caltrans intranet pages which are not displayable to the general public. Until such time that the specific reference becomes available on the internet, the user will have to contact their district liaison, Caltrans project manager, or the appropriate Headquarters division to inquire about the availability of the reference.

Various Reports Can Approve a Project

The project report (PR) documents Caltrans' approval for most types of State highway projects. This includes new facilities, as well as improvements, modifications, or repairs to existing facilities—whether done by Caltrans or by others under an encroachment permit.

Some transportation projects use other reports for project approval. Some of these reports may serve a dual purpose as a project initiation document and a project approval document. These other project approval documents are described in Section 4.

Project Approval

Project approval means approval by Caltrans, and where required, approval by the Federal Highway Administration (FHWA) and the California Transportation Commission (CTC).

Approvals by Other Entities

Transportation projects often require other types of approvals from outside entities before they may proceed to design and construction. Other project-related approvals, agreements, and permits are discussed in Chapter 13 – Project Related Permits, Licenses, Agreements, Certifications, and Approvals.

Changes to Approved Projects

A separate approval must be obtained when changes in project concept or scope are proposed after project approval. This may include the need to write a supplemental PR. See Section 6 for details.

Preferred Alternative

All projects for which an environmental impact report/environmental impact statement (EIR/EIS) is prepared require the development and evaluation of project alternatives. Most projects for which a negative declaration (ND) is prepared also carry more than one alternative through the public hearing phase. Before such projects can be approved, a preferred alternative must be selected. This selection process is described in Section 2.

SECTION 2 Selecting a Preferred Alternative

Selection Timing

Selection of the preferred alternative occurs only after specific effects and reasonable mitigation measures have been identified for each project alternative. The selection is made after all comments are received from the circulation of the draft environmental document (DED) for public comment and from the public hearing process. These comments and the rationale for selecting the alternative are detailed in the final environmental document (FED) and summarized in the project report (PR).

Selection Decision and Approval

The preferred alternative, with discussion substantiating its selection, is presented in the FED. In cases where more than one alternative is equally suitable, the FED can be structured to present such options. The "plan-to-ground" strategy utilized during the formal study's evaluation of alternatives (see Chapter 10 – Formal Project Studies) permits the decision maker to select the alternative (which may or may not be the preferred alternative) that best meets the specific evaluation criteria associated with any particular project proposal.

Informed Decision

The environmental document (ED) should present sufficient information to enable a reasoned choice among the project alternatives. The issues should be sharply defined and provide a clear basis for selection. The selection must reflect the consideration of all significant, reasonably foreseeable, adverse impacts that remain after incorporation of all reasonable mitigation measures. The selection decision must be structured, analytical, and clearly address the specific evaluation criteria developed for the project. It must ensure that the selected project meets the purpose-and-need for the project.

Approval

The preferred alternative is approved with PR approval by the District Director after selection by the project development team (PDT) and recommendation of the project manager. The preparer of the ED has no authority to make an approval decision.

Justified Unavoidable Impacts

An alternative that results in a significant, adverse environmental impact or the use of protected resources will only be approved when all of the following are demonstrated:

- There are no reasonable alternatives that will avoid such impacts or uses.
- There are no reasonable alternatives or mitigation measures that will substantially lessen such impacts or uses.
- There are specific conditions (economic, social, or other) that make other alternatives or mitigation measures unreasonable.

Reasonable Alternatives

Reasonable alternatives are those that have been found to be reasonable and acceptable to Caltrans and Federal Highway Administration (FHWA) in meeting the project's intended purpose-and-need.

Gain Consensus

The goal in defining reasonable alternatives for the preferred alternative selection is to gain a consensus of the community, the PDT, and the permitting agencies. The agreement of the permitting agencies must be formally documented.

Avoidance Alternative

If there is a reasonable alternative that avoids all significant impacts, uses of protected resources, and impacts on hazardous waste, then efforts should be directed to the selection of this alternative. If there are multiple alternatives that avoid all significant impacts, then efforts should be made to select the avoidance alternative that best fulfills the project's purpose-and-need.

Environmentally Preferred Alternative

If there is no such avoidance alternative, then efforts should be directed to selection of the reasonable alternative that causes the least harm, after mitigation, to protected resources and the environment. This is termed the "environmentally preferred alternative."

Overriding Considerations

When overriding considerations dictate the selection of a preferred alternative that is not an available avoidance alternative or the environmentally preferred alternative—the decision must be substantiated with a statement of overriding considerations. When overriding considerations are involved, the consensus reached with the involved resource and regulatory agencies should reflect any balancing of resource impacts.

Balancing Resource Impacts

At times it may be necessary to suggest the acceptance of impacts on one resource in order to avoid or minimize impacts on another resource. Efforts should be made to gain a consensus of the involved resource and regulatory agencies regarding identification of the environmentally preferred alternative.

California Transportation Commission Involvement

When selection of the preferred alternative is highly controversial or if the proposed preferred alternative is significantly higher in overall cost as compared to other build alternatives, it may be appropriate to involve the California Transportation Commission (CTC) in the preferred alternative selection. In such an instance, a preferred alternative report should be submitted to the CTC as a monthly agenda item, with a request for their concurrence. If this is done, it should be done prior to PR approval. If the CTC becomes involved in selecting the preferred alternative, a CTC public hearing will probably be held before the selection.

SECTION 3 Project Report Approves Projects

ARTICLE 1 General

Purpose of the Project Report

The project report (PR) documents Caltrans' approval for most types of State highway projects. A project receives Caltrans' approval when the PR is approved by the District Director or a division chief who has been delegated that authority. When a project is initiated with a Project Study Report – Project Development Support (PSR-PDS), the PR also approves the programming of capital support and capital project dollars for the remainder of the project.

Draft Project Report

Projects with draft environmental documents (DED) require the preparation of a draft project report (DPR) prior to finalizing the PR. The DPR documents the need for the transportation project and summarizes the studies of the cost, scope, and overall impact of project alternatives, so that an informed decision can be made on whether or not to proceed to the public hearing phase of project development. After a public hearing and the selection of a preferred alternative, the DPR is updated to become the PR. Refer to Chapter 10 – Formal Project Studies, for information on the DPR.

Environmental Document

When there is an environmental document (ED) for a project, it is a key project approval document. The ED is prepared to assure that the project complies with State and federal environmental laws. All project activities, such as the development of project alternatives, public input, and selection of the preferred alternative, are discussed in the final environmental document (FED). Selection of the preferred alternative is discussed in Section 2.

Project Report Content

If an FED or Categorical Exemption/Categorical Exclusion Determination Form is required for the project, it must be attached to the PR; otherwise a statement of compliance with environmental laws and regulations must be included in the body of the PR. Any PR discussion of items covered in the FED should be summary in nature, but should provide enough detail to allow district management to obtain a

concise picture of the project without researching the FED. The attached FED should be referenced for any detailed environmental information.

There may also be certain statutory requirements or report considerations that may not be appropriate for the FED. These items are incorporated into the PR.

Categorically Exempt/Excluded Projects

When a project is statutorily or categorically exempt/excluded, there is no ED, so all information must be provided in the PR. The Categorical Exemption/Categorical Exclusion Determination Form is a required attachment unless the project does not require a Categorical Exemption/Categorical Exclusion Determination Form. See Chapter 2 of the *Standard Environmental Reference*.

Format and Guidelines

An outline and detailed guidelines for PR preparation is provided in Appendix K – Preparation Guidelines for Project Report.

Requests for Headquarters Division of Design Review

To obtain a preliminary review of the PR before it is submitted for approval, forward two copies to Headquarters Division of Design, Attention: Office of Project Development Procedures, with a written request stating what is desired from the review. If a review by other Headquarters units is needed, it should be requested directly from those units.

Project Report Approval

See Article 3 of this section for a detailed description of the PR approval process.

Processing

Following approval, two copies of all PRs covered by these guidelines are sent to Headquarters Division of Design, Attention: Office of Project Development Procedures. An additional five copies are sent to Headquarters Division of Engineering Services-Program/Project Resource Management. Copies are not normally sent to other Headquarters units unless specifically requested. See Section 4 for other types of project approval documents that are sent to other Headquarters units instead of Headquarters Division of Design.

ARTICLE 2 Documenting the Preferred Alternative

Project Report and Final Environmental Document Roles

The selection of the preferred alternative is documented in the PR (and also in the FED, when a FED is involved). The PR documents the detailed engineering reasons for selecting the preferred alternative. The FED documents the environmental reasons for selecting the preferred alternative.

Project Report Documentation

When there is a DPR, it is used as a starting point for creating the PR. The DPR answered these three basic questions:

- Why do it at all? (need for project).
- Why do it now? (cost effectiveness).
- Which ways are practical? (alternatives).

The PR should answer the final question:

- Which way provides the greatest public good with the least private harm? (preferred alternative)

The preferred alternative should be documented in accordance with the PR guidelines and outline provided in Appendix K – Preparation Guidelines for Project Report. The items in the following list should be covered:

- Summarize the FED discussion of the preferred alternative, as well as the rationale for its selection. The rationale is the essence of the preferred alternative section of the FED. It describes engineering, environmental, and system planning rationale and explains why each of the other alternatives were rejected.
- Discuss the current construction and right-of-way costs of the preferred alternative compared to the programming figures in the current State Transportation Improvement Program (STIP). Recommendations for any STIP programming changes are made for cost amounts, fiscal year scheduling, or stage construction.
- Summarize the public hearing process results and evaluation, as appropriate. This includes local agency positions.
- Summarize the FED evaluation of major comments related to project alternatives that were received from circulation of the DED.

ARTICLE 3 Caltrans' Project Approval Process

Approvals by Other Entities

Project approval refers to approval by Caltrans, and where required, approval by the Federal Highway Administration (FHWA) and the California Transportation Commission (CTC). Transportation projects often require approvals from outside entities before they may proceed to design and construction. Other project-related approvals, agreements, and permits are discussed in Chapter 13 – Project Related Permits, Licenses, Agreements, Certifications, and Approvals.

Preliminary Sign-off

- To ensure that all right-of-way information contained in the PR and the right-of-way data sheet attached to it are complete, current, and accurate, the right-of-way division chief signs the PR cover sheet.
- To ensure that all engineering and environmental studies have been included in the PR, the project manager signs the PR cover sheet, recommending approval.
- To ensure that all technical information has been prepared in accordance with State law, the registered civil engineer, usually the project engineer preparing such technical information, signs the appropriate sheet.
- When a final environmental impact report/final environmental impact statement (FEIR/FEIS) is completed, a two-part certification is prepared. To ensure that the California Environmental Quality Act (CEQA) laws have been satisfied, the environmental unit chief signs the first part of the certification sheet, attaching the completed findings and statement of overriding considerations.
- To certify that the information contained in an FEIR/FEIS has been reviewed and considered prior to approving the project, the authorized signer of the project report (District Director) signs the second part of the certification sheet. The certification is attached to the front of the FED and is not included in the body of the PR.
- The District Director approves the project by signing the PR cover sheet. The date of signing becomes the "official" project approval and environmental document date (milestone M200 PA&ED).

Approval

Federal Highway Administration Approval Process

When the FHWA is involved, it takes action to approve project design features before the project is approved by the District Director, except for route adoptions. Federal approval of general location and project design features for projects with a route adoption occurs after Caltrans' approval and CTC route adoption. FHWA approval is discussed in Section 5.

State Approval Process

State project approval is given by the District Director after the FED is approved by Caltrans and, if required, after FED and project design feature approval by the FHWA (except route adoptions). The CEQA environmental process is completed when Caltrans, as lead agency, approves a project and files a Notice of Determination (NOD) with the State Clearinghouse in the Governor's Office of Planning and Research. Refer to the *Standard Environmental* Reference for further information. The process for projects that exclusively follow the State approval process differs from the federal approval process only to the extent that the various processing steps do not receive FHWA review or concurrence.

California Transportation Commission Approval Process

The CTC takes project approval action, if involved, after the project has been approved by the District Director. This is discussed in Section 5.

SECTION 4 Other Caltrans Reports that Approve Projects

General

Refer to Figure 8-2 in Chapter 8 – Overview of Project Development, for a summary of project approval document requirements by program.

Project Scope Summary Report for Rehabilitation Projects

The project scope summary report (PSSR) for a categorically exempt (CE) project serves as the project report (PR) for a roadway rehabilitation project (201.120) or a bridge rehabilitation project (201.110). Occasionally a PSSR can also be processed with a negative declaration (ND). For rehabilitation projects in the Minor A program, the PSSR process is optional, but encouraged; otherwise, the district processes a PR. The PSSR, which is the project initiation document, is also the project approval document once an approved CE or a ND is attached. Following approval, two copies of all PSSRs covered by these guidelines are sent to Headquarters Division of Design, Attention: Office of Project Development Procedures. An additional five copies are sent to Headquarters Division of Engineering Services-Program/Project Resource Management. See Appendices G, P, or Q for guidelines for the appropriate PSSR.

Project Report for Planting and Irrigation Projects

The PR for a new highway planting project or a rehabilitated planting and irrigation project is prepared and processed as outlined in Chapter 29 – Landscape Architecture, Section 2, Highway Planting, using a project report (new highway planting or roadside rehabilitation) for project approval. See Appendix D – Preparation Guidelines for Project Report (New Highway Planting or Roadside Rehabilitation) for the guidelines and outline.

Project Report for Safety Roadside Rest Area Projects

The PR for a new safety roadside rest area project (201.260) or a safety roadside rest area restoration project (201.250) is prepared and processed as outlined in Chapter 29 – Landscape Architecture, Section 3, Safety Roadside Rest Areas, using a project report (safety roadside rest area) for project approval. See Appendix M – Preparation Guidelines for Project Report (Safety Roadside Rest Area), for the guidelines and outline.

Project Study Report-Project Report for Certain Special Funded Projects

Special funded projects are State highway improvements constructed by others under encroachment permit, with an estimated construction cost of more than $1,000,000. Special funded projects are processed as State highway projects and require a PR. If the special funded project is non-complex, non-controversial, and meets the criteria outlined in Chapter 9 – Project Initiation, it may qualify for preparation as a combined project study report-project report (PSR-PR) in accordance with the policies and procedures set forth in that section. The PSR-PR is the project approval document. Once approved, two copies of the PSR-PR are sent to Headquarters Division of Design, Attention: Office of Project Development Procedures. An additional five copies are sent to Headquarters Division of Engineering Services-Program/Project Resource Management. The district may utilize this document for similar State-sponsored projects, if appropriate. See Appendix A – Preparation Guidelines for Project Study Report-Project Report, for guidelines and an outline for the PSR-PR.

Permit Engineering Evaluation Report for Encroachment Permit Projects

Encroachment permit projects are those State highway improvements constructed by others under encroachment permit, with an estimated construction cost of $1,000,000 or less. Encroachment permit projects utilize the permit engineering evaluation report (PEER) process in place of a PR for project approval to authorize issuance of an encroachment permit. Districts may require a combined PSR-PR in some cases, provided the cost is over $300,000. Instructions covering the PEER process are included in Chapter 9 – Project Initiation. See Appendix I – Preparation Guidelines for Permit Engineering Evaluation Report, for guidelines for preparing a PEER. The PEER process cannot be used for a project that requires an approval by the California Transportation Commission (CTC), such as a new public road connection to a freeway or a controlled access highway; a PR would be required for such a situation.

Projects Sponsored by Others

Projects sponsored by other entities, such as rail transit projects, water projects, redevelopment projects, etcetera, often require relocation or modification of existing State highways. These are considered special funded or encroachment permit projects as described previously. All required State highway construction or reconstruction to accommodate a project sponsored by others must be covered by a PR, by a combined PSR-PR, or by a PEER, as appropriate. Coordination, review, and reimbursement provisions follow the general procedures found in the references cited in Chapter 2 – Roles and Responsibilities, for locally funded State highway projects.

It is Caltrans policy that all special funded projects will use the PRS-PDS to initiate projects unless a PSR is requested by the project sponsor and authorized by the District Director. In the preparation of a PSR-PDS, only existing information is used and preliminary studies are not prepared. Therefore, final approval reports for projects initiated with a PSR-PDS may take more time to prepare and may require more resources to complete than a project initiated with another type of project initiation document. See Chapter 9 – Project Initiation for more information on project initiation documents.

Project Report for Minor A Projects

The PR for a Minor A project (see Chapter 4 – Programming for a definition) serves as both the project initiation document and the project approval document. When approving a PR for a Minor A project (except for an occasional Minor A project that gets listed in the State Transportation Improvement Program [STIP]), the district follows program priorities established by the program advisor. The Headquarters program advisor should be consulted in cases where the appropriate program is in question. See Appendix K – Preparation Guidelines for Project Report, for guidelines and an outline for the PR. Refer to the *California Manual on Uniform Traffic Control Devices (California MUTCD)* for additional requirements for traffic signal project reports.

If a logical project exceeds the Minor A dollar limit for construction, a major project should be initiated. Separate Minor A projects for segments of an overall project should not be considered. Minor A funds should not to be used to finance a series of small, related, and contiguous projects when a single contract is more appropriate. In those instances, to authorize the larger project, a project initiation document (PSR or equivalent) is prepared and the project is programmed in the appropriate programming document.

Expenditure Authorization Project Report for Minor B Projects

Development of a Minor B project (see Chapter 4 – Programming for a definition) follows the procedural instructions for preparing contracts for services contained in the *Contract Managers Handbook*. The expenditure authorization project report (EA-PR) or the cover letter format project report described in Chapter 9 – Project Initiation serves as both the project initiation document and the project approval document. An example is provided in Appendix B – Preparation Guidelines for Expenditure Authorization Project Report.

Director's Order for Urgent Projects

A Director's Order authorizes project work for emergencies that exceed established cost limits when done by informal bid procedures, force account procedures, equipment rental, or day labor. For additional information on Director's Order Guidelines, see: http://onramp.dot.ca.gov/hq/maint/orway/ha23/do_guide/dog00.html

Projects Off the State Highway

Caltrans has occasionally been responsible for development of projects of others, such as State Parks roads, federal roads, rail transit, and etcetera. The need, alternative solutions, costs, and reasons for selecting a specific design must be documented and reviewed. A PR is prepared and approved to accomplish this documentation. If State highways are involved, the PR documents decisions impacting the highway facility.

Project Report for Capital Preventive Maintenance Projects

All capital preventive maintenance (CAPM) projects utilize a CAPM-PR to define project scope, cost, and approve work. The completed CAPM-PR serves as the project initiation document and the project approval document. Following approval, two copies of all CAPM-PRs covered by these guidelines are sent to: Headquarters Division of Design, Office of Project Development Procedures, Attention: Design Report Routing, Mail Station #28. An additional five copies are sent to Headquarters Division of Engineering Services-Program/Project Resource Management. See Appendix H – Preparation Guidelines for Capital Preventive Maintenance Project Report for CAPM-PR outline.

Expenditure Authorization Project Report for Maintenance Projects

All maintenance projects (20.80 Program) done by contract utilize an expenditure authorization project report (EA-PR) as both the project initiation document and the project approval document. An example is provided in Appendix B – Preparation Guidelines for Expenditure Authorization Project Report.

SECTION 5 Federal Highway Administration and California Transportation Commission Approval of Projects

Federal Participation

Caltrans' policy requires pre-qualification of most projects for federal funding participation. Minimum dollar amounts for federal participation are established by the Headquarters Division of Budgets for various program items. Current instructions from the Headquarters Division of Budgets should be consulted, as the limits change according to financial conditions. Refer to *Deputy Directive DD-11 – Federal Aid Project Funding*.

When State-only funding is requested for a project, but State-only funding has not been identified in the programming document, specific approvals must be obtained from the Headquarters Division of Transportation Programming. The project report (PR) proposing State-only funding should fully explain the efforts taken to qualify the project for federal participation and explain why federal funding could not be obtained.

If such a determination is made late in the process, approval from the Headquarters Division of Budgets is required. State-only funding requests must be reviewed and approved by the Headquarters Project Delivery Coordinator prior to submittal to the Division Chief of the Headquarters Division of Transportation Programming or the Division Chief of the Headquarters Division of Budgets. A copy of the approved PR should be attached to the request.

The amount of State-only funds may be limited. All approvals are based on availability of funds at the time of advertising.

Federal Highway Administration Approvals

Certain projects require Federal Highway Administration (FHWA) review and/or concurrence, regardless of source of funding. For more information, see Chapter 2 – Roles and Responsibilities and Chapter 8 – Overview of Project Development.

For example, when a project includes a new or modified Interstate access, regardless of the funding, FHWA approval is required. The FHWA approval process for a new or modified interstate access consists of two steps: a Determination of Engineering and Operational Acceptability and a Final Approval. Refer to Chapter 27 – New Public Road Connections for more information.

Any requests for FHWA approval or concurrence are submitted by the district to the FHWA. To insure FHWA approval, it is necessary to involve and inform them of project development from the beginning of studies through preparation of the plans, specifications, and estimate (PS&E). Whenever possible, the FHWA liaison engineer should informally review requests for approvals prior to submittal of the formal request. This facilitates the processing of the formal request.

See the latest *Stewardship and Oversight Agreement on Project Assumption and Program Oversight* between the Federal Highway Administration, California Division and Caltrans for the project actions assumed by Caltrans and the project actions where FHWA has retained their authority as well as the detail associated with the various oversight responsibilities.

Federal Highway Administration Location and Design Approval

For actions covered by an environmental impact statement (EIS) or finding of no significant impact (FONSI), FHWA signing of the final environmental impact statement (FEIS) Cover Sheet or execution of the FONSI constitutes FHWA acceptance of the general location and project design features unless delegated to Caltrans under stewardship. If environmental documents are tiered and separate location and design hearings are held, FHWA makes specific acceptance of the location or the design. FHWA signing of the FONSI or of the record of decision (ROD) for a FEIS, is required for FHWA approval to proceed with design or acquisition of right-of-way.

For other required FHWA approvals, by type of facility, refer to Chapter 2 – Roles and Responsibilities, Section 7. For details on preparation (including level of documentation) and approval of the FONSI and the ROD, refer to the *Standard Environmental Reference*.

California Transportation Commission Approvals

When the California Transportation Commission (CTC) approves a route adoption or a new freeway connection, or when it is a responsible agency under California Environmental Quality Act (CEQA) because it will approve the allocation of funding, CTC approval of the project is needed.

Reports for Route Adoptions

The project report serves as an information source for processing route adoptions through the CTC. When the PR (with the mandatory attachment of the final environmental document [FED]) is transmitted to Headquarters Division of Design, Attention: Office of Project Development Procedures, a reproducible and three prints of the route adoption map are submitted concurrently (not as attachments) to Headquarters Division of Design, Attention: Office of Project Development Procedures. The Headquarters Division of Design prepares the Route Adoption Report for CTC action. See Chapter 24 – Freeway Agreements, for route adoption procedures.

Reports for New Public Road Connections

Reports for CTC approval of new public road connections to freeways and controlled access highways are prepared by the Headquarters Division of Design. See Chapter 13 – Project Related Permits, Licenses, Agreements, Certifications, and Approvals; and Chapter 27 – New Public Road Connections for new connection procedures.

Reports for Consideration of Future Funding

The Headquarters Division of Environmental Analysis prepares reports for approval of a project for future consideration of funding by the CTC. Refer to the *Standard Environmental* Reference for details.

SECTION 6 Changes to Approved Projects

Major/Minor Change Determination

To guard against future litigation, care should be exercised in determining whether a project change is major or minor. A highly detailed, approved plan of development establishes an understanding of what is to take place. Generally speaking, the greater the detail shown on the exhibit maps in the environmental document (ED) or at the public hearing, the smaller the proposed change must be to qualify as a minor change.

Minor Changes

Minor changes are usually defined as small variations of design that do not significantly affect costs, adjacent properties, or environmental impacts. Minor changes to previously approved major design features normally do not require recycling of the environmental and public hearing processes, but do require concurrence from appropriate entities.

Approvals

Approval to proceed with a minor change to an approved project is given by the District Director, and when appropriate, by the Federal Highway Administration (FHWA). The approval request shall include an explanation of what prompted the change as well as a substantive justification for approving the change.

Major Changes

Major project changes include any change in project concept or a substantial change in project scope.

Reevaluate Concept

Because of the long lead time associated with major projects, changing land-use patterns, or loss of funding, there is often a need to reevaluate the concept and scale of previously approved projects. If a previously approved project or its ultimate scope has materially changed in concept, current detailed information should be evaluated before the extent of rescoping is decided. Proposed major deviations from approved concepts should be discussed with the Headquarters Project Delivery Coordinator before undertaking full-scale environmental and design studies.

Required Reports

Any change in concept and substantial changes in scope should be discussed in a supplemental project report (PR). If the project development team determines that a new or supplemental draft environmental document (DED) is required, a supplemental draft project report (DPR) is prepared. In some cases, it may be appropriate to begin again with a new project study report (PSR). After approval, two copies of the final document should be forwarded to the Headquarters Division of Design, Attention: Office of Project Development Procedures, as appropriate.

Rescoping

Supplemental DPRs and supplemental PRs covering rescoping place particular emphasis on the following:

- The degree to which rescoping limits future expansion or flexibility.
- The impacts on adjacent, local street systems and the ability of local agencies to adjust their programs to match.
- Alternatives and their trade-offs in cost, traffic service, and economic, social, and environmental effects.
- Problems and costs resulting from right-of-way acquisition and contractual commitments previously made within these project limits.

If rescoping involves rescission of an adopted alignment and the disposal of acquired right-of-way, then the processes for modifying an adopted route designation and the process for recycling freeway route adoptions are involved. These are outlined in Chapter 23 – Route Adoptions.

Headquarters Division of Project Management-Project Delivery &Workload Development should be advised of cost and schedule changes.

Staged Projects

A supplemental PR is not required if a currently programmed project has been identified as a stage of a previously approved project and it is consistent with the ultimate concept of the original project.

Staging, as appropriate, should be discussed in a DPR and a DED, or in an environmental reevaluation, or in a supplemental DPR and DED, as appropriate. The final PR and final environmental document (FED) must address a fundable project.

Content of the Supplemental Project Report

All supplemental PRs require the same signatures as a PR and require the same statements covering environmental determination. The magnitude of project change determines the format and level of detail for the body of the report. Smaller project changes would require preparation of a memorandum that describes the changes to the original, approved project; changes of greater magnitude would require the preparation of a complete new report, following the PR outline provided in Appendix K – Preparation Guidelines for Project Report.

CHAPTER 13 – Project Related Permits, Licenses, Agreements, Certifications, and Approvals

Table of Contents

CHAPTER 13 – Project Related Permits, Licenses, Agreements, Certifications, and Approvals 13-5
ARTICLE 1 Introduction and Definitions 13-5
Reference Information 13-5
Introduction 13-5
General 13-5
Definitions 13-6
Laws 13-6
Policy 13-7
ARTICLE 2 Securing Governmental Consent to Projects 13-7
Environmental Scoping 13-7
Intergovernmental Reviews 13-7
Coordination with the Federal Highway Administration 13-8
State and Federal Agencies 13-8
Reaching Agreement on Mitigation 13-9
ARTICLE 3 Permits and Approvals 13-10
State and Regulatory Agency Involvement 13-10
Local Agency Involvement 13-13
Conditions of Permits and Approvals 13-15
Federal Involvement 13-16
Categorically Excluded Projects 13-16
Historic Properties and Wetlands 13-17
Bridges Over Navigable Waters 13-17
Floodplains 13-18
ARTICLE 4 Cooperative Agreements and Similar Agreements 13-19
Purpose 13-19
Cooperative Agreements 13-19
Interagency Agreements 13-20
Highway Improvement Agreements 13-20
No Cooperative Work without Cooperative Agreement 13-20
References 13-20
ARTICLE 5 Maintenance Agreements 13-21

General 13-21
Timing 13-21
Cost Sharing 13-21
Approval 13-21
References 13-22
ARTICLE 6 Route Adoptions 13-22
California Transportation Commission Action 13-22
Approval 13-23
References 13-23
ARTICLE 7 Freeway Agreements and Controlled Access Highway Agreements 13-23
Agreement Required to Close Local Roads 13-23
New Connection Requires Revised Agreement 13-24
Local Roads to be Relinquished 13-24
Maintenance Agreements are Separate 13-24
References 13-24
ARTICLE 8 Relinquishments 13-24
California Transportation Commission Resolution 13-24
When Relinquishment is Needed 13-25
Agreement or Resolution 13-25
References 13-25
ARTICLE 9 Disposal of Rights-of-Way 13-25
Request to Decertify Rights-of-Way 13-25
References 13-26
ARTICLE 10 Public Road Connections 13-26
California Transportation Commission Consent 13-26
New or Modified Interchanges 13-26
Requires Revising Agreements 13-26
References 13-27
ARTICLE 11 Resolutions of Necessity for Condemnation 13-27
Property Acquisition 13-27
Condemnation Requires Resolution of Necessity 13-27
California Transportation Commission Appearance by Property Owner. 13-27
Reviews 13-28
References 13-28

Table of Figures

Figure 13-1 State and Regulatory Agency Involvement Based on Project Location 13-11
Figure 13-2 State and Regulatory Agency Involvement Based on Resource Affected by Project 13-11
Figure 13-3 State and Regulatory Agency Involvement Based on Project Activities 13-12
Figure 13-4 Local Agency Involvement Based on Project Activities Outside the State Right-of-Way 13-15

CHAPTER 13 – Project Related Permits, Licenses, Agreements, Certifications, and Approvals

ARTICLE 1 Introduction and Definitions

Reference Information

Some of the references found in this chapter have hyperlinks that connect to Caltrans intranet pages which are not displayable to the general public. Until such time that the specific reference becomes available on the internet, the user will have to contact their district liaison, Caltrans project manager, or the appropriate Headquarters division to inquire about the availability of the reference.

Introduction

This chapter discusses project development workflow tasks with certain additional requirements. Most of these tasks occur between project initiation and the final environmental document approval date; however, some of the tasks may occur late in the project design phase.

General

Entities other than Caltrans have vested interests in transportation projects, which they protect by requiring mitigation of project effects or by requiring various permits, licenses, agreements, certifications (PLAC), and approvals. Negotiations with other agencies to allow a project to proceed to construction take place during many phases of a project's development; during engineering and environmental studies; the project approval process; and project design. Negotiations usually reach closure with an approval, agreement, or permit at the same time as project approval or shortly thereafter.

Definitions

Information handout – is supplemental project information furnished to bidders as a handout.

Local agency – the entity ultimately responsible for operations, maintenance, and tort liability of the public road connection to a freeway or controlled access highway, usually a city or county.

Laws

California Streets and Highways Code Section 83

Section 83 states:

> Any public street or highway or portion thereof which is within the boundaries of a state highway, including a traversable highway adopted or designated as a state highway, shall constitute a part of the right of way of such state highway without compensation being paid therefor, and the department shall have jurisdiction thereover and responsibility for the maintenance thereof.

California Streets and Highways Code Section 93

Section 93 states:

> The department may construct and maintain detours as may be necessary to facilitate movement of traffic where state highways are closed or obstructed by construction or otherwise. The department may direct traffic onto any other public highway which will serve as a detour, in which case the department, upon the completion of such use, and upon the request of the local agency having jurisdiction over the highway, shall restore the same to its former condition; provided, that the local agency shall reimburse the department for the amount of all betterment to such highway caused by the restoration. The department shall also reimburse the local agency for all reasonable additional expenses incurred by that agency in maintaining said highway during the period of detour if such additional expenses were caused by said detour.

Policy

The project development team determines who is responsible for obtaining the required permits unless the district already established responsibilities for this. The following chapters and sections provide additional information:

- Chapter 2 – Roles and Responsibilities
- Chapter 16 – Cooperative Agreements
- Chapter 23 – Route Adoptions
- Chapter 24 – Freeway Agreements
- Chapter 25 – Relinquishments
- Chapter 26 – Disposal of Rights-of-Way for Public or Private Road Connections
- Chapter 27 – Access Control Modification
- Chapter 28 – Resolutions of Necessity

ARTICLE 2 Securing Governmental Consent to Projects

Environmental Scoping

Contacts, consultations, and coordination with other agencies are required for compliance with environmental law. Special attention must be given to the scoping process for preparation of the draft environmental impact statement. The *Standard Environmental Reference (SER)* elaborates on involving appropriate agencies in Volume 1, Chapter 32.

Intergovernmental Reviews

Caltrans is obligated to cooperate with other agencies on proposed development projects and other governmental actions that may impact State highways. The California Environmental Quality Act (CEQA) and the National Environmental Policy Act (NEPA) permit Caltrans to review such projects. Information about the intergovernmental review process is available at: *Local Development-Intergovernmental Review website*.

Coordination with the Federal Highway Administration

Early and continuous coordination with the Federal Highway Administration (FHWA) on proposed State highway projects is crucial, since most projects are federally funded or require NEPA environmental approval. For specific conditions and circumstances of FHWA involvement, see Chapter 2 – Roles and Responsibilities; Chapter 12 – Project Approvals and Changes to Approved Projects; Chapter 21 – Exceptions to Design Standards; and Chapter 27 – Access Control Modification; as well as the *Standard Environmental Reference*.

State and Federal Agencies

In addition to directly affected local and regional agencies, the following State and federal agencies should be involved as soon as jurisdictional responsibility becomes evident on some aspect of the project. (This is not an exhaustive list.)

State Agencies

- California Environmental Protection Agency
  - Air Resources Board
  - Appropriate Regional Water Quality Control Board
- California State Transportation Agency
  - California Highway Patrol
- California Natural Resources Agency
  - California Coastal Commission
  - California Department of Conservation
  - California Department of Fish and Wildlife
  - California Department of Parks and Recreation
  - California Department of Parks and Recreation
    - California Office Historic Preservation
  - California State Lands Commission
  - Central Valley Flood Protection Board

Federal Agencies

- U.S. Department of Defense
  - Department of the Army
  - Department of the Army
    - U.S. Army Corps of Engineers
- U.S. Department of Homeland Security
  - United States Coast Guard
- U.S. Department of Housing and Urban Development
- U.S. Department of the Interior
  - Bureau of Land Management
  - Bureau of Reclamation
  - Indian Affairs
  - National Park Service
  - U.S. Fish and Wildlife Service
  - U.S. Geological Survey
- United States Department of Agriculture
  - U.S. Forest Service
  - Natural Resources Conservation Service
- United States Department of Commerce
  - National Oceanic and Atmospheric Administration
    - National Marine Fisheries Service
- United States Department of Transportation
  - Federal Aviation Administration
  - Federal Highway Administration
- United States Environmental Protection Agency

Refer to the *Standard Environmental Reference* for additional information on involvement of other State and federal agencies.

Reaching Agreement on Mitigation

Caltrans must obtain agreement on project-related features from a number of agencies, such as the California Department of Fish and Wildlife, the U.S. Fish and Wildlife Service, the Environmental Protection Agency, and the U.S. Army Corps of Engineers for biological mitigation. If the proposed mitigation is unusually large, costly, or complex, Caltrans should invite appropriate district staff from the landscape architecture program and construction and maintenance divisions when consulting

with regulatory agencies, in order to achieve an early resolution of design, construction and maintenance concerns.

This cooperative effort occurs from the system planning phase to final acceptance of the mitigation design by regulatory agencies and is described in the *NEPA/404 Memorandum of Understanding*.

After acceptance of the mitigation plan by the regulatory agencies, the project manager must forward a notice of acceptance to the district maintenance division. The notice must include the following:

- Proposed date of construction
- Project location, size of project, location of mitigation site
- Length of monitoring and establishment period
- Anticipated date on which maintenance will begin
- Who will maintain the site
- Special maintenance considerations and directions
- Name of contact person for further information

ARTICLE 3 Permits and Approvals

State and Regulatory Agency Involvement

Transportation projects often need permits and approvals to allow construction and eventual opening to the public. To aid in determining which State and regulatory agency permits and other approvals may be required for a specific project, answer the following questions and refer to Figure 13-1, Figure 13-2, and Figure 13-3. See Figure 13-4 for local agency involvement outside the State right-of-way.

- Where is the project located?
- What resources are affected by the project?
- What specific activities does the project involve?

In addition, the *Standard Environmental Reference* provides project-specific guidance on determining: 1) which federal agencies' involvement may be required; 2) which federal laws and regulations may need to be complied with; and 3) the appropriate type of environmental document and associated processing.

Figure 13-1 State and Regulatory Agency Involvement Based on Project Location

If the project is located within "Geographic Area," then:		
Geographic Area	**Agency Involved**	**Permit**
Can be up to one mile inland, but may vary	Coastal Commission	Coastal development permit
Greater San Francisco Bay, first 100-feet inland, but may vary	San Francisco Bay Conservation and Development Commission (BCDC)	Development permit
Lake Tahoe watershed	Tahoe Regional Planning Agency (TRPA) and Lahontan Regional Water Quality Control Board	Project permit
Central Valley	Central Valley Flood Protection Board and U.S. Army Corps of Engineers	Encroachment permit or U.S. Army Corps of Engineers 208/408
Outside the Central Valley	Local flood control agency and U.S. Army Corps of Engineers	Encroachment permit or U.S. Army Corps of Engineers 208/408

Note: This figure is not intended to be all inclusive.

Figure 13-2 State and Regulatory Agency Involvement Based on Resource Affected by Project

If the project affects "Resource," then:		
Resource	**Agencies Involved**	**Permit/Approval**
Air	Air pollution control/air quality management district	Authority to construct and permit to operate for activities emitting stationary source pollutants to the atmosphere
Fish and wildlife habitat	Department of Fish and Wildlife, National Marine Fisheries Service, and U.S. Fish and Wildlife Service	Lake or streambed alteration agreement for activities in lakes, streams and channels, and crossings
Water	State Lands Commission	Land use lease (for encroachments, crossings on tidelands, submerged lands, etc.)
	State Water Resources Control Board (including Central Valley	National Pollutant Discharge Elimination System permit for storm water discharges to surface water

Water	Flood Protection Board) and regional water quality control board	Waste discharge requirements for non-storm discharges to surface water or groundwater to the waters of the State
	Department of Health Services, Division of Drinking Water and Environmental Management, or local health office	Permit to operate a public water system

Note: This figure is not intended to be all inclusive.

Figure 13-3 State and Regulatory Agency Involvement Based on Project Activities

If the project involves "Activity," then:		
Activity	**Agencies**	**Permit/Approval**
Bridges over navigable waters	U.S. Coast Guard	Bridge permit
Conversion of timberland to non-forest uses through timber operations and immediate timberland protection zone rezoning	California Department of Forestry and Fire Protection	Timberland conversion permit
Power transmission lines, pipelines and railroad crossings	Public Utilities Commission	Review of plans and approval
Solid waste disposal	Department of Resources Recycling and Recovery	Disposal requirements
Waste discharge	State Water Resources Control Board; regional water quality control board	Discharge requirements
Storing, treating, or disposing of hazardous waste	Department of Toxic Substances Control	Hazardous waste facilities permit
	State Water Resources Control Board; regional water quality control board; local agency	Hazardous waste discharge requirements; underground storage of hazardous substances permit
Right-of-way across State park land	Department of Parks and Recreation	Right-of-way permit, license, easement, joint agreement, or lease
Encroachment on 100-year floodplain, intermittent streams, and desert washes	Federal Emergency Management Agency (involvement via local agency), Department of Fish and	Lake or streambed alteration agreement

	Wildlife, and U.S. Army Corps of Engineers	
Encroachment on or across cove, bay, or inlet	Department of Boating and Waterways	Review of plans
All activities involving dams or reservoirs	Department of Water Resources, Division of Safety of Dams	Approval of plans
Dredging	Department of Fish and Wildlife	Standard or special suction dredging permit
	State Lands Commission	Dredging permit
Burning	Air pollution control district; California Department of Forestry and Fire Protection; local fire control agency	Burn permit
Entering private property to gather information for temporary use	Caltrans district right-of-way unit	Property owner right of entry approval, property owner approval for temporary encroachment
Entering surface waters to gather information or construct project	Regional water quality control board	Water quality certification or waiver

Notes:
This figure is not intended to be all inclusive.
If any of the activities are within the Central Valley Flood Protection Board jurisdiction, an encroachment permit is needed.

Local Agency Involvement

Within State Right-of-Way

Caltrans does not need to obtain local agency permits for work done within State right-of-way, even if the work is on a local street or road. In addition, Caltrans does not have to obtain building permits for work done on State-owned or leased facilities. The *California Streets and Highways Code*, Section 83, states that any public street within the boundaries of a State highway "…shall constitute a part of the right of way of such state highway…" Also, in Regents of University of California v. City of Santa Monica, 77 Cal. App. 3d 130, the California Appellate Court added that:

> "In the absence of a specific constitutional or statutory requirement, the construction and maintenance of State highway and highway-related facilities are sovereign activities that are not subject to local regulation or permit procedures."

Outside State Right-of-Way

The local agency permit process is often the vehicle used to review improvements made by Caltrans. Many local agencies do not require Caltrans to obtain a permit. However, in some cases Caltrans is required to obtain permits for work done within local agencies' jurisdictions that are outside Caltrans' right-of-way. Although a local agency is allowed to collect an assessment for inspection and plan checking services, *California Government Code*, Sections 6103.6 and 6103.7, exclude the application of these assessments to a State government. Caltrans does not have to pay fees for permit issuance, inspection services, or plan checking to a local agency for work done in, under, on, or about any local agency roadway.

Detours

Where detours are on local streets but outside of the State's right-of-way, the *California Streets and Highways Code*, Section 93, authorizes Caltrans to operate detours without permits from the local agency.

Easement or Right of Entry

If Caltrans has an easement or right of entry into a local right-of-way, Caltrans may or may not be required to obtain a permit depending on the terms of the easement and/or other conditions. For specific easement information, contact the district right-of-way engineering unit.

Fees

Caltrans pays fees when a statute(s) specifically disallows the State agency exemption from fees imposed by a local agency. See the *Standard Environmental Reference* for additional information. Examples of these types of fees are:

- Certain fees under the *California Water Code*. See *California Government Code*, Section 6103.1.
- Certain fees under the *California Health and Safety Code*. See *California Government Code*, Section 6103.10.
- Certain fees under the Solid Waste Management Program. See *California Government Code*, Section 6103.11.

On the other hand, fees imposed by a local agency must distinguish between "permit and inspection fees" and "service charges." While Caltrans is exempt from paying permit and inspection fees, it may not be exempt from paying service charges

imposed by the local agency. "Service charges" are the charges imposed by a local agency when they are requested to provide either materials or produce a project delivery product needed for work on the State Highway System (SHS). For example, charges for water used for construction on a State highway or the preparation of engineering documents for a Caltrans implemented project are service charges. This is different from inspection or permit fees that are charged by the local agency to ensure the permittee complies with the local agency's standards and requirements.

Figure 13-4 Local Agency Involvement Based on Project Activities Outside the State Right-of-Way

If the project involves "Activity," then:		
Activity	**Agency**	**Permit/Approval**
Surface mining (material borrow sites, etc.)	Local agency	Surface Mining and Reclamation Act (SMARA) requirements
Sewage disposal	County health department	Disposal requirements
Grading	Local agency	Review of grading plans
Encroachment on or across a local street or highway	Local agency	Review of and comment on project plans
Commercial, industrial, and residential development	Local agency	Land use, general plans, specific plan, conditional use, or subdivision
100-year floodplain encroachments	Local agency	National flood insurance program
Contractor's operations and incidentals, i.e., burning, hauling, water hookup for dust control, etc.	Local agency	Contractor to obtain routine permits and licenses

Note: This figure is not intended to be all inclusive.

Conditions of Permits and Approvals

The supplemental project information specification and information handout must provide a list of permits as stipulated in the *Ready to List and Construction Contract Award Guide (RTL Guide)*. Caltrans needs permits and approvals to legally proceed with a project. Include permit conditions in the project plans, specifications, and estimate. Examples of permit conditions are:

- Allowable construction period
- Creek diversion systems
- Environmental concerns
- Floodplain water surface elevation before, during, and after construction
- Levee re-construction or any encroachment on or near a levee
- Methods and materials allowed on construction ramps on river banks
- Methods of paint residue recovery during paint removal operations
- Navigational lighting
- Regrading of river beds
- Signs for environmentally sensitive areas
- Silt fencing
- Sound attenuation systems to protect endangered fish during pile driving operations
- Temporary fencing around environmentally sensitive areas
- Temporary fencing for wildlife
- Other physical works that affect the contractor's performance of the contract

Federal Involvement

In addition to the permits and approvals required by State and local agencies and others, various federal agencies may also require permits and approvals. Federal agencies have approval or permit authority over activities on federal lands and certain resources (i.e., air and water quality, wildlife, navigable waters, etc.) when federal actions are undertaken. Federal laws, regulations, and executive orders may have a bearing on a specific transportation project and require approvals, permits, or communication with federal agencies other than FHWA. See Chapter 2 – Roles and Responsibilities, to determine which federal agencies—due to location, resources affected, or activities—require involvement on a project.

Categorically Excluded Projects

The environmental requirements of the various federal laws, regulations, and executive orders apply to categorically excluded (CE) projects as well as to projects requiring an environmental document. These requirements are fulfilled as part of the environmental document preparation. When a categorically exclusion is prepared, these requirements must not be overlooked. Federal environmental laws, regulations, and executive orders are described in the *Standard Environmental Reference*.

Historic Properties and Wetlands

Projects, including categorically excluded projects, that require a federal action (funding, permits, etc.) and potentially affect historic properties or involve wetlands may require earlier than normal public involvement. When properties eligible for the National Register of Historic Places are present or potentially present, a public mailing inviting written comments is required. Similarly, projects involving wetlands require providing an opportunity for early public involvement by publishing a notice in the local newspaper inviting written comments. Refer to the *Standard Environmental Reference* for public notice requirements relating to potential historic properties and wetlands.

Bridges Over Navigable Waters

Projects that include work on existing bridges over navigable waters or propose new bridges over navigable waters must be reviewed by the U.S. Coast Guard and may need a bridge permit.

The FHWA is responsible for determining which bridges do not need a U.S. Coast Guard bridge permit due to limited navigability of a waterway as outlined in *Title 23 Code of Federal Regulations*, Section 650.805.

The U.S. Coast Guard is responsible for determining whether bridges over navigable waters need a U.S. Coast Guard bridge permit as outlined in *Title 23 Code of Federal Regulations*, Section 650.807.

The U.S. Coast Guard and FHWA have outlined the steps necessary for coordination for bridge planning and permitting in a *USCG and FHWA Memorandum of Agreement* between the entities.

As provided by *Title 33 Code of Federal Regulations*, Part 114 through Part 118, the U.S. Coast Guard is responsible for the bridge locations and clearances, alteration of unreasonably obstructive bridges, drawbridge operation, and bridge lighting and other signals.

Early coordination with the Eleventh Coast Guard District Bridge Administrator is essential for efficiently moving the project through the permitting process.

Detailed information on the U.S. Coast Guard bridge permitting process along with the Eleventh Coast Guard District contact is located at:

USCG Bridge Permit Application Process website

USCG District Contacts website

Floodplains

Consistency with National Flood Insurance Program standards (administered by the Federal Emergency Management Agency) is required by the FHWA for Federal-aid highway actions involving floodplains and regulatory floodways. The FHWA policies and procedures for the location and hydraulic design of highway encroachments on 100-year floodplains are prescribed in *Title 23 Code of Federal Regulations*, Part 650, Subpart A.

Flood system encroachment permit applications outside of the Central Valley should be sent to the local flood control agency for consistency with National Flood Insurance Program standards. Besides coordinating with the local flood control agency, coordination with the U.S. Army Corps of Engineers and the entity that maintains the facility may be necessary. See Chapter 2 – Roles and Responsibilities for more information on coordination with federal agencies.

Projects in the Central Valley fall under the jurisdiction of the Central Valley Flood Protection Board. Any proposed project involving over-water bridges or highways located within the Central Valley must be evaluated for the 200-year standard. The Central Valley Flood Protection Board has additional vertical and lateral clearance requirements besides the 200-year standard (plus freeboard) for projects in the vicinity of levees.

The U.S. Army Corps of Engineers reviews projects which may affect federal facilities based on its own standards and requirements. This is performed in coordination with the Central Valley Flood Protection Board. Not all of the U.S. Army Corps of Engineers facilities fall under the jurisdiction of the Central Valley Flood Protection Board. Coordination with the U.S. Army Corps of Engineers, the local agency, and the entity that maintains the facility may be necessary where the Central Valley Flood Protection Board does not have a role.

Caltrans submits flood system encroachment permit applications to the Central Valley Flood Protection Board for projects crossing, adjacent to, through, or spanning Central Valley Flood Protection Board features, which include walls, levees, improved channels or designated floodways, and regulated streams including tributaries. After an application is deemed complete, a permit is needed. The Central Valley Flood Protection Board will forward the application to the local U.S. Army Corps of Engineers for their review and comment. The U.S. Army Corps of Engineers review may take up to a year when they have to include their headquarters in the review. Information on Central Valley Flood Protection Board permitting, including jurisdiction maps is located at: *Central Valley Flood Protection Board Permitting website*.

Additional guidance on the Central Valley Flood Protection Board permitting process related to Caltrans projects is located at: *Caltrans Drainage References website*.

ARTICLE 4 Cooperative Agreements and Similar Agreements

Purpose

Some projects are financed jointly by Caltrans and other local or State governmental agencies or private entities. A local or State entity responsible for water delivery, flood control, or storm water drainage may desire to include some of that work with a related highway project. A local agency may desire work on local streets and roads adjoining a State highway project, over and above what is needed for the project, to provide additional landscaping on a State highway or to install a traffic signal that involves legs that are local streets. A local agency may propose to totally or partially fund a State highway improvement. A developer may desire to make some improvements to accommodate a development adjacent to the State highway.

Caltrans must enter into agreements that provide for such cooperation on a project.

Cooperative Agreements

The cooperative agreement is used to outline the responsibilities and obligations of the parties to an agreement, such as funding, roles and responsibilities of each partner, liability, ownership, right-of-way, utilities, maintenance, etc. On State highway projects, where a local agency provides all of the funding and staffing for a State highway improvement, there may be several cooperative agreements covering

different stages of the project. For example, preliminary engineering, design, and construction, where Caltrans could either provide project oversight or do some of the work on a reimbursed basis provided budget authority exists.

Interagency Agreements

An interagency agreement is a contract between two State agencies to provide services. This includes contracts with the University of California or a California State University campus. Interagency agreements do not include contracts with campus foundations, the Federal government, local agencies, or other states. State agencies have contract authority to enter into interagency agreements under the authority of the *California Government Code*, Section 11256.

Highway Improvement Agreements

A highway improvement agreement is similar to a cooperative agreement; it is entered into between Caltrans and a private entity or developer. However, Caltrans prefers the local agency sponsor the private developer's project and enter into a cooperative agreement with Caltrans rather than entering into a highway improvement agreement with the private developer. A highway improvement agreement is only used when that is not possible.

No Cooperative Work without Cooperative Agreement

In the absence of an executed cooperative agreement, Caltrans has no legal authority or obligation to incur expenses on any cooperative work, including work on special funded projects beyond that which it is Caltrans' obligation to provide. Execution of a cooperative agreement is required prior to incurring any costs or committing any personnel resources.

References

Refer to Chapter 16 – Cooperative Agreements and to the *Cooperative Agreement Manual* for a discussion of the types of agreements, responsibilities, approvals, formats, procedures, and district obligations. Refer to Chapter 2 – Roles and Responsibilities for a discussion of requirements for special funded projects.

ARTICLE 5 Maintenance Agreements

General

Maintenance agreements specify the responsibility for maintaining facilities constructed on or adjacent to State routes. They also define the financial arrangements for assuming this responsibility. These agreements are between Caltrans and local agencies, never a private company or developer. Occasionally Caltrans enters into maintenance agreements with other State agencies. The types of pre-approved maintenance agreements are:

- Freeway Maintenance Agreement
- Electrical Maintenance Agreement
- Delegated Maintenance Agreement
- Landscape Maintenance Agreement
- Project Specific Maintenance Agreement

Timing

Ideally, maintenance agreements should be executed after PA&ED, but it is essential that they be finalized well before the advertising of a construction contract.

Cost Sharing

Cost sharing provisions of maintenance agreements typically revolve around the type of facility to be maintained. For railroad structures, the district right-of-way railroad coordinator typically negotiates the terms of the maintenance agreement. For electrical facilities (signals and lights) on conventional highways at intersections with local streets or roads, the costs shall be shared in the same ratio as the number of legs in the intersection under each jurisdiction to the total number of legs. The same concept applies to interchanges involving freeway facilities and local streets and roads, except participation is based on the ratio of the number of legs of the respective agencies to the total number of legs of the interchange facility.

Approval

Approval is needed from the Headquarters Division of Maintenance prior to maintenance agreement execution. The Headquarters Division of Maintenance delegated this authority to the Deputy District Directors, Maintenance. A review by the Headquarters Division of Legal is required if the pre-approved format for

maintenance agreements is not used (see the following Sub-Article "References"). While the responsibility of signing a maintenance agreement is often delegated to a district maintenance engineer, approval cannot occur without cursory review by the maintenance agreements coordinator, Headquarters Division of Maintenance.

References

Detailed information about maintenance agreements is located at: *Maintenance Agreements website*.

General information regarding maintenance agreements is located in Volume 1, Chapter 1, Sections 1.16 and 1.20, of the *Maintenance Manual*.

To examine the cost distributions of electrical maintenance agreements, refer to Volume 1, Chapter K, page K-35 and the figures on pages K-37 through K-39 of the *Maintenance Manual*.

For information on railroad maintenance agreements, contact Headquarters Division of Right of Way and Land Surveys-Railroads and Utility Relocations.

ARTICLE 6 Route Adoptions

California Transportation Commission Action

Adoption of route locations requires action by the California Transportation Commission (CTC) before a project on the new location can proceed. Route adoptions are needed to:

- Establish the location of an unconstructed route.
- Change the location of an existing route to a new alignment including such conditions as:
  - Relocating a portion of an existing route (such as a curve realignment project) if the existing route is to be relinquished to the local agency.
  - Relocating a highway to a newly constructed route if the superseded route is to be relinquished to the local agency (also known as Bypass).
- Designate an existing local road as a traversable highway.
- Improve an existing highway to current standards when no route adoption exists. (This occurs when a former county road has been added to the State Highway System by the California Legislature.)
- Redesignate a route when an existing route is changed to a new route number.

- Redesignate a portion of a route congruent to an existing route if the existing route is to be relinquished to the local agency.
- Transfer the location of a traversable highway to a different local road (also known as Transfer of Highway Location).
- Convert a conventional highway to a freeway or an expressway. (This is a freeway declaration or a controlled access highway declaration.)
- Temporarily connect a new alignment to an existing highway when construction is staged.

Approval

The CTC's route adoption occurs at a regularly scheduled CTC meeting following a district's request to place the items on the CTC meeting agenda. A route adoption is normally a routine action if there is community support but, if there is considerable controversy, the CTC may schedule and hold a separate public hearing prior to taking any action. When a project requires FHWA's National Environmental Policy Act approval, the appropriate documents are submitted to FHWA following the CTC action. Route adoption of a freeway or expressway requires a subsequent freeway (or controlled access highway) agreement with the affected local agency as discussed in Article 6.

References

Chapter 23 – Route Adoptions, provides circumstances and procedures for CTC route adoption.

ARTICLE 7 Freeway Agreements and Controlled Access Highway Agreements

Agreement Required to Close Local Roads

An agreement between Caltrans and the local jurisdiction authorizing a local street or road closure is required before a city street or county road is closed by the construction of a freeway or expressway project. This is accomplished with either a freeway agreement or a controlled access highway agreement. A controlled access highway is also known as an expressway. A freeway agreement (or controlled access highway agreement) normally covers the entire freeway (or expressway) facility, or a large segment thereof, within the local jurisdiction. A controlled access highway is subject to all of the requirements concerning agreements that pertain to freeways.

New Connection Requires Revised Agreement

CTC consent is required before a local public road is connected to a freeway or expressway, as discussed in Article 9. If the new public road connection is approved, a new agreement that shows the connection must supersede the existing freeway or controlled access highway agreement.

Local Roads to be Relinquished

Typically, a freeway (or controlled access highway) agreement provides for the relinquishment of local roads improved or constructed as part of a project. The exhibit map should indicate these facilities. The agreement serves as the basis for the subsequent request for CTC relinquishment action following construction, as discussed in Article 7.

Maintenance Agreements are Separate

Freeway (or controlled access highway) agreements are used as the basis to establish maintenance agreements with local agencies. However, freeway agreements are not used as maintenance agreements. Instructions on maintenance agreements are issued by the Headquarters Division of Maintenance.

References

Chapter 24 – Freeway Agreements, discusses freeway and controlled access highway agreement requirements. Also refer to related Chapter 27 – Access Control Modification, Chapter 25 – Relinquishments, and Sections 23.5 and 100.2 of the *California Streets and Highways Code*.

ARTICLE 8 Relinquishments

California Transportation Commission Resolution

The relinquishment of a State highway (or roads and streets built in conjunction with a State highway) to a local agency is accomplished by a CTC resolution. This resolution is requested following construction of a project after work on the facility to be relinquished is completed and the facility is no longer needed for State highway purposes.

The Caltrans district must submit information through the Office of Land Surveys in the Headquarters Division of Right of Way and Land Surveys for the CTC to relinquish to the county or city the portion of a superseded State highway within the county or city. The information is prepared four months in advance of completion of construction to accommodate a 90-day notice period of intention to relinquish. The 90-day notice period would allow the local agency to state reasons and objections to the relinquishment if they wish to protest it. The scope of work and cost of the repair work should be included in the project report and in the project approval of the project to construct the new highway.

When Relinquishment is Needed

Caltrans initiates relinquishment action by the CTC when:

- a route is superseded by relocation.
- a route is deleted from the State Highway System by legislative enactment.
- new construction or improvements to the local road system (collateral facilities) are made by Caltrans in connection with a State highway project.
- nonmotorized transportation facilities, constructed as part of a State highway project, will be owned, operated and maintained by a county or city.

Agreement or Resolution

Relinquishments of collateral facilities are made in accordance with an agreement or resolution by the local agency's governing body. The freeway agreement (or controlled access highway agreement), discussed in Article 6, is often used for this purpose.

References

Chapter 25 – Relinquishments, contains the details of the relinquishment process.

ARTICLE 9 Disposal of Rights-of-Way

Request to Decertify Rights-of-Way

A project may involve the disposal of existing operating rights-of-way. District Directors have the approval authority to decertify and dispose of rights-of-way on operating facilities: this may include land, access rights, or both. The project engineer from the responsible unit prepares the request to decertify right-of-way for the District Director's approval. Since right-of-way information is required, the

project engineer must coordinate the preparation of the request with the district right-of-way unit. The FHWA must approve the disposal of right-of-way for federally funded right-of-way or construction.

References

See Chapter 26 – Disposal of Rights-of-Way for Public or Private Road Connections, for information needed for requests for approval to decertify and dispose of rights-of-way on operating facilities. Also see related material in Chapter 24 – Freeway Agreements and Chapter 27 – Access Control Modification.

ARTICLE 10 Public Road Connections

California Transportation Commission Consent

CTC consent is required prior to providing a new public road connection to a freeway or expressway. This requirement applies after a freeway or expressway is initially constructed. It may also apply to the initial construction, if the connecting road did not exist at the time of the freeway or controlled access highway adoption, or if the connection is not shown on the current freeway or controlled access highway agreement. Some proposals for access openings to expressways are not considered public road connections and may involve the procedures to dispose of operating right-of-way as discussed in Article 8.

New or Modified Interchanges

The approval of new or modified interchanges is related to CTC approval of new public road connections. Modified interchanges may or may not be considered new public road connections. New or modified interchanges on the Interstate System require FHWA approval; a two-step process to help manage risk and provide flexibility. See Chapter 27 – Access Control Modification.

Requires Revising Agreements

Revision of an existing freeway or controlled access highway agreement is required to show CTC-approved new connections of city streets or county roads or highways and other revised interchanges, as discussed in Article 6.

References

Procedures relating to new public road connections to freeways and expressways, and for new or modified interchanges, are discussed in Chapter 27 – Access Control Modification. Also see Chapter 24 – Freeway Agreements, for additional information.

ARTICLE 11 Resolutions of Necessity for Condemnation

Property Acquisition

Caltrans strives to acquire property by purchase, rather than by condemnation. Providing sufficient lead time in the project development process for negotiations to take place results in fewer situations where it is necessary to invoke the power of eminent domain to condemn the property. The condemnation process is time-consuming and can delay projects. Eminent domain is normally used as a last resort. Only a small percentage of properties are acquired by the use of the power of eminent domain.

Condemnation Requires Resolution of Necessity

The California Constitution provides that private property may be taken or damaged for public use only when just compensation has first been paid to the owner. Condemnation of private property by the power of eminent domain must follow prescribed rules. When Caltrans and a property owner are unable to reach agreement on acquisition of a needed property, the condemnation process is initiated by the CTC passing a resolution of necessity (RON). The resolution of necessity provides the legal findings necessary for Caltrans to file suit.

California Transportation Commission Appearance by Property Owner

A property owner whose property is under consideration for a resolution of necessity has the right to appear before the CTC to contest the resolution of necessity on grounds related to the need for the project and for acquiring the property, but not on compensation issues. An appearance information sheet is used to inform the CTC of the facts leading to the resolution of necessity appearance and to document the property owner's concerns.

Reviews

In order to fully consider the concerns of property owners who request an appearance before the CTC, Caltrans utilizes a detailed procedure (known as a First Level Review and a Second Level Review) and involves a condemnation review panel to determine whether to proceed with the condemnation.

References

Information on the process used for a resolution of necessity when an appearance is requested is discussed in Chapter 28 – Resolutions of Necessity.

CHAPTER 14 – Preparation of Project Plans

Table of Content

CHAPTER 14 – Preparation of Project Plans 14-3
SECTION 1 General 14-3
Design Phase 14-3
Laws 14-3
Initiate Final Project Design 14-4
Construction Contract Standards 14-4
SECTION 2 Preliminary Plans 14-5
ARTICLE 1 General 14-5
Request Additional Data 14-6
Identify the Ready to List Constraints Applicable to the Project 14-7
Other Considerations 14-7
Experimental Features 14-8
ARTICLE 2 Geometric Base Maps 14-9
Development of Geometric Base Maps 14-9
Review by Functional Units 14-9
Review by External Agencies 14-9
Design Approvals 14-10
ARTICLE 3 Cross-sections 14-10
ARTICLE 4 Bridge Site Data Submittal 14-11
Prepare Site Plans 14-11
Structure Preliminary Report 14-12
ARTICLE 5 Right-of-Way Submittal 14-12
Determine Right-of-Way Requirements 14-12
Send Maps to Right-of-Way 14-12
Prepare Appraisal Maps 14-12
Certificate of Sufficiency 14-13
Initiate Right-of-Way Appraisals 14-13
ARTICLE 6 Skeleton Layouts 14-13
Circulate Skeleton Layouts 14-13
Typical Cross-Sections 14-13
SECTION 3 Final Plans 14-14
ARTICLE 1 General 14-14
Conduct Detailed Project Design 14-14
Special Considerations 14-14

ARTICLE 2 Final Maps to Right-of-Way 14-14
Final Right-of-Way Requirements 14-14
Acquisition and Clearance 14-15
Condemnation Procedures 14-15
ARTICLE 3 Bridge General Plans 14-15
Bridge General Plans 14-15
Falsework Approval 14-15
Development of Bridge Plans, Specifications, and Estimate 14-16
ARTICLE 4 The Project Plans 14-16
Plans Prepared by Project Engineer 14-16
Plans Prepared by Functional Units 14-16
ARTICLE 5 Final Quantities 14-17
Quantity Calculations 14-17
Unit Price Analysis 14-17
SECTION 4 Plans, Specifications, and Estimate Submittal 14-18
ARTICLE 1 General 14-18
Complete Project Design 14-18
Review for Current Standards 14-18
Use of Standard Plans 14-18
Local Agency Review 14-19
Federal Highway Administration Review 14-19
Safety Review 14-19
Constructability Review 14-19
Review for New or Revised Standards 14-19
Funds Request 14-20
ARTICLE 2 Environmental Reevaluation 14-20
Environmental Reevaluation Process 14-20
Permits 14-20
Mitigation 14-21
ARTICLE 3 Right-of-Way Certification 14-21
Request Right-of-Way Certification 14-21
Types of Certification 14-21
ARTICLE 4 Preparation of Contract Documents 14-22
Submittal to District Office Engineer 14-22
Exception to Delivery of Cross-sections at Ready to List 14-23
Submittal to Headquarters Office Engineer 14-24

CHAPTER 14 – Preparation of Project Plans

SECTION 1 General

Design Phase

The design phase spans the project development process from the development of preliminary plans through the submittal of contract documents for advertisement. The contract documents consist of the following:

- Plans, specifications, and estimate (PS&E).
- Supplemental project information which is relevant to the project and made available to bidders.

Laws

California Public Contract Code, Section 10120 requires that Caltrans prepare full, complete, and accurate plans and specifications and estimates of cost before entering into a contract for a project. In addition, the Supreme Court's Spearin Doctrine requires Caltrans, as the owner-operator, to give an implied warranty that the plans and specifications will be adequate to carry out the project if the contractor complies with the plans and specifications. Consequently, the construction project must comply with Caltrans' right-of-way, environmental, design, and the Federal Highway Administration's (FHWA) standards. Advertisement of a construction project is constrained until these requirements are met. See Chapter 8 – Overview of Project Development for an overview of the project issues that may create an advertising constraint. For a comprehensive list of which requirements must be met before a project is advertised, see the *Ready to List and Construction Contract Award Guide (RTL Guide)*.

Initiate Final Project Design

Final project design is initiated by obtaining a 1-phase (design) expenditure authorization (EA) at project approval.

> Final design: Any design activities following preliminary design and expressly includes the preparation of final construction plans and detailed specifications for the performance of construction work.

Construction Contract Standards

To ensure that the project engineer (PE), as the engineer of record for the contract, complies with the law and court decisions, Caltrans developed the following construction contract standards:

- Standard Specifications.
- Standard Special Provisions.
- Standard Plans.

The PE shall use standard special provisions (SSPs) and standard plans in the contract documents. If, after consultation with the district office engineer unit, it is determined that a specific standard special provision or standard plan is not appropriate, the PE and the district office engineer shall move forward with the process for approval of a modification which can be found in the *Ready to List and Construction Contract Award Guide (RTL Guide)*. See the *Plans Preparation Manual* on the use of modified standard plans.

SECTION 2 Preliminary Plans

ARTICLE 1 General

The main activities in producing a preliminary set of plans are the completion of geometric base maps, the submittal of structure site data, the submittal of maps to the right-of-way unit, and the circulation of skeleton layouts.

To fully comply with the *California Professional Engineers Act* (*California Business and Professions Code*, Section 6700 through Section 6799), all engineering plans, calculations, specifications, and reports shall be prepared by, or under the responsible charge of, a licensed engineer and shall include his or her name and license number. Interim engineering documents shall include a notation as to the intended purpose of the engineering document, such as "preliminary," "not for construction," "for plan check only," or "for review only." All engineering plans and specifications that are permitted or that are to be released for construction shall bear the signature and seal or stamp of the licensee and the date of signing and sealing or stamping. All final engineering calculations and reports shall bear the signature and seal or stamp of the licensee, and the date of signing and sealing or stamping.

The project engineer's responsibilities during the design process include the following:

- Prepare quality plans that meet Caltrans standards, practices, and policies.
- Prepare project cost estimates and monitor costs to keep the project within budget.
- Develop cross-sections.
- Utilize available resources to maintain project schedules.
- Monitor the project scope to ensure consistency with previous approvals.
- Inform the project manager (PM) of any cost, scope, or schedule changes that may be required for the project.

Revisions to the scope, schedule, or cost of a project require a program change request. If the change in scope is significant, a supplemental project report and an environmental reassessment may be needed. The project plans must otherwise be consistent with the project description identified during the environmental studies.

Request Additional Data

Project design requires the continuous review and update of data. Examples of information that should be obtained for the development of preliminary plans are listed as follows:

- Mapping and Surveys Data

  With input from the functional units, the PE requests the district surveys unit to conduct any field surveys required to accomplish the design of the project. The district surveys unit is also responsible for coordinating with the Headquarters Division of Engineering Services-Structure Design Office of Photogrammetry and Preliminary Investigations to provide any required topographic mapping.

- Materials Report

  The materials report is prepared by the district materials unit to determine pavement structural sections and to recommend slopes for excavation and embankment. Concurrence should be obtained from local agencies for the design of structural sections on local streets and roads. Topics discussed in the report may also include slope stability, seismic considerations, availability of materials, and other related information.

- Drainage Report

  The drainage report is usually prepared by the hydraulics unit to establish basic drainage requirements and to allow for the early design of box culverts, sanitary sewers, cross drainage, and other drainage facilities. Drainage designs should be reviewed by the maintenance unit and local agencies as appropriate.

- Traffic Data

  Updated traffic projections and design designations should be requested from the planning unit. These are used to verify that the capacity and other operational characteristics of the proposed improvements are adequate for the design year. Traffic volumes are also required to calculate the equivalent single-axle load (ESAL) and traffic index, which both determine the design of the pavement structural section.

Identify the Ready to List Constraints Applicable to the Project

Identify and begin the process for clearing Ready to List (RTL) constraints at the beginning of this phase. Some issues must be resolved in order to provide the information necessary to develop the contract documents. Some issues have long lead times for resolution and must begin well in advance of the RTL milestone. Examples of RTL constraints are:

- Impact mitigation for historical structures and biological features.
- The project information on foundation investigations, retaining walls, and noise barriers.
- Cooperative agreement for construction oversight.
- Hazardous waste.
- Permits.
- Railroad agreements.
- Freeway agreements with local agencies.
- California Transportation Commission (CTC) route adoptions or CTC consent to new public road connections.
- Sole source or proprietary items.
- Nonstandard special provisions or plans approval.

Other Considerations

During the initial stages of the project design process, various project scope and project-related activities should be initiated and monitored. Examples of areas to consider include:

- Relinquishment and abandonment procedures.
- Maintenance agreements for responsibility after construction.
- Transit and rail facilities.
- Recycling should be incorporated into the project whenever appropriate; available hardware may be found in the statewide inventory of salvaged highway hardware. In addition, all contracts should identify highway hardware and other material that has the potential for reuse or salvage, rather than disposal.

Experimental Features

The PE may be requested to use an experimental feature on the project. This request could come from within or from outside of Caltrans, or it may come about through the initiative of the PE. A feature is generally considered experimental whenever it is a non-standard item or process, or a proprietary item is specified. For the Federal Highway Administration to participate in the cost of the experimental feature, they must approve a work plan describing the experimental feature and illustrating how Caltrans will construct it and evaluate its performance under the Construction Evaluated Program. The Construction Evaluated Program's intent is to field test the constructability and performance of promising new products, techniques, and methods relating to highway facilities. For additional information on the Construction Evaluated Program, see the Construction Evaluated Program Guidelines at www.dot.ca.gov/hq/oppd/guidance.htm.

To obtain federal approval for an experimental feature to be included as a contract item, a finalized work plan should be submitted to the Headquarters Division of Design, Office of CTC Highway Appearances, Encroachment Exceptions, and Resource Conservation a minimum of four weeks prior to project advertisement. Since site suitability is often a key factor, agreement with the Headquarters unit responsible for that functional area should be obtained prior to submittal. Although not the preferred method, an experimental feature can be included as a "contract change order" on an ongoing contract.

If a proprietary item is involved, approval must be obtained from the District Director; all requests on structure items must be approved by the Chief, Headquarters Division of Engineering Services. Copies of the approval letters must be attached to the work plan when submitted to the Headquarters Division of Design; Attention: Office of CTC Highway Appearances, Highway Encroachments and Resource Conservation - Proprietary Item Work Plan. Refer to Index 110.10 of the *Highway Design Manual* for further information.

ARTICLE 2 Geometric Base Maps

Development of Geometric Base Maps

A preferred alternative was selected during the project approval process and must now be refined to produce geometric base maps, typical sections, and profiles. Preferably, the development of alternatives was performed using controlled aerial mapping, which can easily be transformed into geometric base maps.

For some projects, as-built plans or photo mosaics may be sufficient. The geometric base maps must show existing topography and proposed engineering features. Accurate mapping is needed for all subsequent design activities, such as determining right-of-way needs, designing drainage facilities, developing traffic plans, etc.

While preparing the base maps, it is appropriate to update the strip map developed during earlier project studies. The strip map is distributed as an attachment to requests for project data and other correspondence.

Review by Functional Units

Geometric base maps should be sent to appropriate functional units to identify problems that are easier to correct at early stages of design and to establish a foundation for skeleton layouts. Comments from maintenance, hydraulics, landscape architecture, structures (to determine railroad involvement and easement requirements), and traffic operations are particularly useful.

Review by External Agencies

Contacts with external organizations were initiated earlier in the project development process; these relationships should be maintained throughout the design process. Local agencies should be allowed an opportunity to review the geometric base maps and to comment on the design of frontage roads, intersections, and other local facilities.

Coordination should also be maintained with any affected agencies that issue permits, such as the California State Lands Commission, United States Coast Guard, State and local reclamation boards, California Department of Fish and Wildlife, California regional water quality control boards, U.S. Army Corps of Engineers, California Department of Parks and Recreation, etc. To facilitate the permit process, these

agencies should be encouraged to perform an early review of the geometric base maps.

Design Approvals

The determination of final vertical and horizontal alignment is necessary for the completion of geometric base maps. At this stage, interchange and intersection details have also been established, and all preliminary geometrics should be reviewed by the PM prior to finalizing the maps. Comments on the geometric base maps should be requested from the Headquarters Project Delivery Coordinator. If additional exceptions to design standards are needed, approval must be obtained according to the procedures in Chapter 21 – Exceptions to Design Standards. For projects on the Interstate System with construction costs exceeding $1 million and for projects involving special structures as defined in Chapter 2 – Roles and Responsibilities, a review of the geometric base maps and the preliminary design should also be requested from the FHWA liaison engineer.

ARTICLE 3 Cross-sections

Earthwork cross-sections are a vital component in the development and construction of many projects. Cross-sections are necessary throughout the development of a project.

Cross-sections

- Assist the designer in developing the most efficient way to handle the earthwork items.
- Assist the bidder in understanding the scope of earthwork to be performed.
- Are used by district survey units, district construction units, and the contractor to construct the project as designed.

Cross-sections shall be developed for all projects, regardless of sponsor, that include items for roadway excavation or imported borrow except for the following:

- Projects that are exclusively resurfacing.
- Projects that are exclusively highway planting.
- Projects that are exclusively building construction with no improvements to parking or heavy equipment storage facilities. (No roadway construction.)
- Projects where minimal or no grading is required, as determined during reviews with surveys and construction, such that sufficient information is

contained in typical cross-sections, profile grade, contour grading and/or other plan sheets, or that the average-end area calculations are not to be used for payment purposes.

For projects that have earthwork and where cross-sections do not improve the constructability of the project, an exception to the requirement for cross-sections preparation may be obtained. The exception process is as follows:

The decision to not prepare cross-sections shall be made as early as possible. The Deputy District Director's for construction and surveys must concur with this decision in writing.

The District Director shall approve project-specific exceptions to this cross-section preparation policy. This authority may be delegated not lower than the Deputy District Director for Design.

A memorandum stating the reason(s) and justification(s) for not preparing cross-sections must be included in the PS&E submittal package in order to certify the RTL milestone. The memorandum shall include the signatures of district construction and district survey representatives indicating their concurrence.

For additional information about cross-sections, refer to *CADD Users Manual*.

ARTICLE 4 Bridge Site Data Submittal

Prepare Site Plans

The Headquarters Division of Engineering Services-Structure Design is responsible for the design of all bridges, pumping plants, pedestrian structures, and nonstandard retaining walls, noise barriers, culverts, and other highway- and transit-related structures. A site plan must be prepared for each structure and submitted to Structure Design using a standardized format. The site plans should include survey base lines, alignments, profiles, typical cross-sections, benchmarks, proposed geometrics, and topography. The submittal is not considered complete until all data is supplied accurately. Instructions for completing the bridge site data submittal can be found at: http://www.dot.ca.gov/hq/esc/pi/

Structure Preliminary Report

After receiving the bridge site data submittal, Headquarters Division of Engineering Services-Structure Design prepares the structure preliminary report (and a preliminary foundation site plan, if needed) describing the design features for the structure. The report is sent to the district for review to ensure compliance with the project's geometric requirements. After the district's comments are incorporated, structures design is initiated.

ARTICLE 5 Right-of-Way Submittal

Determine Right-of-Way Requirements

During the project approval process, the right-of-way data sheet was prepared using preliminary maps, assessor's maps, record maps, and property ownership maps. However, substantial changes to right-of-way requirements can occur during the design phase. After geometric design features have been completed, slope catch lines are plotted on the geometric base maps and right-of-way requirements are established according to the minimum offsets described in the *Highway Design Manual*. When determining right-of-way widths, reasonable allowances should be made for possible future design revisions. In addition, easements may be required for maintenance access, drainage, noise barriers, material sites, utilities, construction work areas, etc.

Send Maps to Right-of-Way

After right-of-way requirements are determined, geometric base maps describing the requirements are submitted to right-of-way engineering to provide a basis for the appraisal process.

Prepare Appraisal Maps

The geometric base maps are used to order title reports and prepare appraisal maps. The appraisal maps indicate the sizes of the parcel takes and remainders, and show engineering details that may affect property appraisal values, such as fences, gates, water wells, and driveways. Other map items include potential excess lands (for construction detours, contractor's yards, etc.) and government easements (for improvements on U.S. Forest Service land, etc.).

Certificate of Sufficiency

The completed right-of-way appraisal maps are reviewed by the PE to verify that the designated right-of-way lines are required to construct the project. A Certificate of Sufficiency (*Right of Way Manual* Exhibit 6-EX-9) with a Hazardous Materials Disclosure Document – Acquisition form (ENV-0001-A) for the parcels contained in the appraisal report is signed by the project engineer and design senior. See Chapter 18 – Environmental Contamination for further discussion of the Hazardous Materials Disclosure Document – Acquisition form.

Initiate Right-of-Way Appraisals

After appraisal maps are certified and the appraisal process is initiated, the right-of-way unit establishes the fair market value of required parcels, which determines the offers made to parcel owners.

ARTICLE 6 Skeleton Layouts

Circulate Skeleton Layouts

The skeleton layouts consist of geometric base maps showing topography, proposed geometric features, and right-of-way. The layouts are divided into plan-sized sheets (with no overlapping details) and distributed to the functional units for use in developing their portion of the PS&E. Pavement delineation, drainage, planting and irrigation, and other work may be superimposed on the skeleton layouts to produce special-purpose plan sheets.

Typical Cross-Sections

To provide complete information, typical cross-sections are prepared and accompany all skeleton layouts.

Typical cross-sections are based on details provided in the project report and the materials report.

SECTION 3 Final Plans

ARTICLE 1 General

Conduct Detailed Project Design

Skeleton layouts were previously distributed to applicable functional units. They are now utilized to prepare final plans. Quantity calculations, contract specifications, and other elements of detailed design must also be completed at this stage. After the functional units deliver their portions of the PS&E, the PE consolidates the plans and circulates them within the district for review.

Special Considerations

As final plans near completion, it should be confirmed that all special considerations for the project are being resolved. These considerations may be constraints to advertisement of the project. Examples of special consideration are:

- Hazardous waste cleanup.
- Railroad agreements.
- Approval of material and disposal sites.
- Water well abandonment procedures.
- Aesthetics review.
- Transportation management plan.
- Environmental mitigation commitments.

For a comprehensive list of requirements that must be met before a project is advertised, see the *Ready to List and Construction Contract Award Guide (RTL Guide)*.

ARTICLE 2 Final Maps to Right-of-Way

Final Right-of-Way Requirements

Right-of-way requirements were submitted after the completion of the geometric base maps, but design refinements may result in changes to these requirements. If necessary, updated maps should be sent to the right-of-way unit so that appraisal maps can be revised to reflect the additional or modified parcels or easements.

Acquisition and Clearance

The right-of-way unit begins the acquisition process for each parcel as soon as the appraisal of that parcel has been completed. When the appraisals of the last additional or modified parcels are completed, the acquisition of those parcels is begun. Clearance of improvements is accomplished by the implementation of a property management plan, which is prepared by the right-of-way unit. Basic elements of the plan include the following:

- Issue 90-day relocation notices to the property owners to vacate their property.
- Initiate and implement sale of buildings and provide necessary monitoring to ensure that clearance is timely.
- Perform demolition and clearance contracts, as necessary.

If required, a relocation assistance plan will be implemented.

Condemnation Procedures

If negotiations with a property owner have been unsuccessful, the condemnation process may be initiated. Condemnation of property through eminent domain is initiated through a resolution of necessity, which is requested from the CTC. (See Chapter 28 – Resolutions of Necessity for details.) Following the CTC's adoption of the resolution of necessity, Orders of Possessions must be acquired from the courts to provide for possession after 90 days.

ARTICLE 3 Bridge General Plans

Bridge General Plans

The bridge site data submittal and the structures preliminary report are used to prepare the bridge general plans. The plans provide a description of the bridge type, dimensions, aesthetics treatment, and cost estimates. The Headquarters Division of Engineering Services-Structure Design transmits the plans to the district for review before continuing with detailed structure design.

Falsework Approval

The PE should review the general plan falsework openings for conformity to current standards. Nonstandard vertical falsework clearances must be approved by the Headquarters Project Delivery Coordinator. Nonstandard horizontal clearances

require approval from the District Director, with concurrence from the Headquarters Project Delivery Coordinator. If bridge construction involves falsework on local streets or roads, concurrence should be requested from the local agency. For more information on falsework, see the *Highway Design Manual*, Index 204.8.

Development of Bridge Plans, Specifications, and Estimate

After the PE's concurrence is obtained for the bridge general plan, the development of bridge plans and quantity calculations can begin. Foundation studies are conducted by the Headquarters Division of Engineering Services-Structure Design, in conjunction with Headquarters Division of Engineering Services-Geotechnical Services. The structures foundation report and other information are used to develop the bridge unchecked detail sheets. These details are again reviewed by the district before Structure Design proceeds with the preparation of the bridge PS&E.

ARTICLE 4 The Project Plans

Plans Prepared by Project Engineer

Project plan preparation complies with the standards set forth in the *Plans Preparation Manual*. Computer-aided design and drafting (CADD) should conform to the standards and procedures contained in the *CADD Users Manual*.

The PE prepares the majority of the project plans. These usually include the layout sheets, typical cross-sections, profile sheets, construction details, drainage sheets, quantity summary sheets, etc.

Plans Prepared by Functional Units

The following are examples of plans prepared by the functional units:

- Landscape architecture prepares plans for new and replacement planting, irrigation crossovers and systems, electrical service for automatic irrigation systems, environmental mitigation planting, erosion control, etc.
- Traffic prepares plans for pavement delineation, construction area signs, traffic handling (including staging and detours), etc.
- Traffic electrical prepares plans for signal and illumination, power supply, and railroad electrical requirements.
- Utilities prepare plans for relocation of utilities during the construction contract.

ARTICLE 5 Final Quantities

Quantity Calculations

Project cost estimates are continuously updated throughout the project development process. As more information becomes available, specific contract items of work are identified. The quantities of these items are calculated and tabulated on a plan sheet labeled "Summary of Quantities."

Unit Price Analysis

Project cost estimates should represent the fair and reasonable price the State should expect to pay for each item of work to be performed. Determining appropriate unit prices for individual contract items requires an analysis of recent bid prices for similar projects or an analysis of current labor, equipment, and materials costs. For more information, see Chapter 20 – Project Development Cost Estimates. After final quantities and unit prices are determined, they should be entered into the Basic Engineering Estimating System (BEES).

SECTION 4 Plans, Specifications, and Estimate Submittal

ARTICLE 1 General

Complete Project Design

The PE works with the district office engineer unit to prepare the PS&E package, which is then submitted to the Headquarters Division of Engineering Services-Office Engineer for eventual contract advertising. For greater detail, see the *Ready to List and Construction Contract Award Guide (RTL Guide)*.

Review for Current Standards

Revisions to design standards, standard plans, and standard special provisions are issued with a stated effective date, after which the new or revised standards will be followed. The design standard revisions are issued with a change transmittal memorandum that identifies any revisions that involve special implementation procedures requiring mandatory implementation as late as completion of construction.

In general, revisions to design standards in the *Highway Design Manual* *(HDM)*, *California Manual on Uniform Traffic Control Devices (California MUTCD)*, *Bridge Manuals*, *Design Information Bulletins*, and interim manual changes that may be issued by Caltrans, must be included in the PS&E prior to submittal to Headquarters Division of Engineering Services-Office Engineer. Refer to the *Highway Design Manual*, Index 82.5, for more information on the effective date for implementing revisions to design standards.

Use of Standard Plans

The standard plans will not cover each and every condition, therefore revisions will occasionally be required in order to fit the given situation. For the policy on the use of non-standard plans, see Section 1. For further information on the process for use of non-standard plans, see the *Ready to List and Construction Contract Award Guide (RTL Guide)*. For bridge items, see the *Bridge Design Details Manual* for additional requirements.

Local Agency Review

Local agencies have had opportunities to review and comment on the project throughout the project development process. Their comments should be minimal at the final stage of design. The plans, specifications, and estimate package should be sent to the local agency staff for final review and concurrence. Any appropriate changes should be incorporated. Particular attention should be given to comments from the local agency on construction road closures and on improvements to facilities that will eventually be relinquished to them.

Federal Highway Administration Review

The FHWA may have been involved with various reviews and approvals throughout the life of the project. At the PS&E stage, all projects on the Interstate System (except resurfacing, restoration, and rehabilitation [RRR] projects) require final approval via submittal of a draft standard form (FNM76) to the district office engineer, who forwards it to the Headquarters Office of Federal Resources.

Safety Review

The district safety committee is responsible for reviewing all projects for compliance with safety standards. After reviewing the PS&E package, the committee prepares a safety report or letter. Appropriate reference should be included in the PS&E submittal. See the *Highway Design Manual*, Index 110.8, for details.

Constructability Review

See Chapter 8 – Overview of Project Development, for information on meeting constructability requirements. The PS&E will reflect the results of the constructability review.

Review for New or Revised Standards

Revisions to design standards are issued from time to time and have a stated effective date. The project will be designed to current standards unless an exception is approved. Refer to the *Highway Design Manual*, Index 82.5, for details.

Funds Request

All State-funded projects, except "Minor B" projects, have funding approved by vote of the CTC. A project's funds request should be reviewed by appropriate district units and signed by the Deputy District Director for Program/Project Management. The request is sent to the Headquarters Division of Budgets, which administers the voting process and submits the request to the CTC.

If highway planting is to be installed as a separate contract, it is to be funded from the parent highway project at the time the parent project is voted by the CTC and PS&E scheduled.

ARTICLE 2 Environmental Reevaluation

Environmental Reevaluation Process

The environmental reevaluation process was established to confirm that the conclusions in the final environmental document remain valid. Changes to the project during design, changes in environmental impacts, or changes in environmental laws, may cause impacts not addressed in the original document and may require additional environmental study, documentation, and mitigation. Examples include expanded hazardous waste identified during cleanup operations, additional right-of-way requirements to accommodate for slope stability, unanticipated drainage considerations, or the listing as a federal endangered species of a new species that the project may impact.

The environmental unit reviews the project for environmental compliance to allow the PS&E development process to continue if no significant additional impacts are identified. The reevaluation should be documented in the PS&E package.

Permits

The environmental reevaluation should include a review of the permits required from regulatory agencies. The review should verify that all permits have been issued, that they are still compatible with the proposed construction, and that expiration dates are current.

Mitigation

Impact mitigation measures should be incorporated into the various portions of the PS&E. A review of the PS&E for environmental commitments, hazardous waste remediation, and material sites should also be included in the environmental reevaluation.

ARTICLE 3 Right-of-Way Certification

Request Right-of-Way Certification

Before a construction project can be advertised, the right-of-way unit must certify that the right-of-way has been acquired. All projects require certification, even if no new right-of-way is involved.

The right-of-way certification includes the following topics:

- Status of the Required Right of Way
- Status of Affected Railroad Operating Facilities
- Material/Disposal Site(s)
- Status of Required Utility Relocations
- Right of Way Clearance
- Airspace Agreements
- Compliance with Relocation Assistance Program Requirements
- Cooperative Agreements
- Environmental Mitigation
- Certification

Types of Certification

The three types of right-of-way certification are defined in here. A project can be advertised with a Certification No. 3, but it must be upgraded to a No. 1 or No. 2 three weeks prior to bid opening.

- No. 1 Certification indicates that all property has been acquired.
- No. 2 Certification indicates that all property has been acquired or that orders for possession have been obtained.
- No. 3 or No. 3 Workaround Certification indicates that the right-of-way process is in order, but acquisition or orders for possession will not be completed until a certain date.

ARTICLE 4 Preparation of Contract Documents

Submittal to District Office Engineer

After incorporating comments collected during district circulation, the PE completes the draft PS&E package and forwards it to the district office engineer unit (see *Ready to List and Construction Contract Award Guide (RTL Guide)*). Some of the items included in the package are listed as follows:

- Cover memorandum.
- RTL certification – a summary of the status of external constraints (permits, agreements, etc.).
- Special provisions (in some districts, the special provisions are compiled by the district office engineer unit).
- Basic Engineering Estimating System cost estimate.
- Right-of-way certification.
- District drafting plan review checklist.
- Copy of request for funds.
- PS&E computer-aided design and drafting submittal form.
- Railroad clauses.
- Copies of documents for information handout.
- Project plans.
- To meet RTL certification, the district-region construction duty senior shall provide to the district office engineer one of the following documents:
  - A verification memorandum stating that final cross-sections were received.
  - A verification memorandum stating that cross-sections are not required under the previous policy criteria.
  - An approved exception memorandum as described under "Exception to Delivery of Cross-sections at Ready to List."
- Final cross-sections shall be made ready for distribution to potential bidders no later than the project advertisement date.

- The district office engineer unit is responsible for ensuring the completeness, quality, and consistency of all PS&E packages. After combining the structures and district portions of the PS&E, the district office engineer finalizes the package and submits it to Headquarters Division of Engineering Services-Office Engineer for processing. Structures final contract tracings or electronic files are submitted to Office Engineer by the Headquarters Division of Engineering Services-Structure Design upon two-week notice from the district office engineer unit.

Exception to Delivery of Cross-sections at Ready to List

Approval of exceptions to the policy that cross-sections shall be completed by RTL has been delegated to the District Directors. If the District Director is not a registered civil engineer, written delegation to the district or region manager whose responsibilities include the design function is required.

This exception grants the district the ability to deliver cross-sections after the RTL date, but before the advertisement date. This exception does not relieve the district from the responsibility of preparing cross-sections. Projects will not be advertised without final cross-sections available for bidders' use.

The PS&E submittal must indicate when cross-sections will be available in order to certify the RTL milestone. The memorandum shall include the signatures of district construction and district survey representatives indicating their buy-in.

For additional information about cross-sections, refer to the *CADD Users Manual*.

Submittal to Headquarters Office Engineer

Construction Contract Ready for Advertisement – District Director Delegation

If the authority to approve advertisement has been delegated to a District Director, the district office engineer unit produces a draft contract ready (DCR) for the PE's seal and signature. These projects are listed immediately for advertisement, without verification by Headquarters Division of Engineering Services-Office Engineer. The *Ready to List and Construction Contract Award Guide (RTL Guide)* lists the services that are provided by Office Engineer for these types of projects.

Construction Contract Ready for Advertisement – No District Director Delegation

If the authority to approve advertisement has not been delegated, the district office engineer unit submits the PS&E to Headquarters Division of Engineering Services-Office Engineer.

- Headquarters Division of Engineering Services-Office Engineer performs an errors and omissions review of the PS&E and sends a draft construction contract (DCC) with comments to the district for response.
- After the comments have been resolved by the PE and the PE resends the PS&E to Headquarters Division of Engineering Services-Office Engineer, Office Engineer produces a draft contract ready for the PE's seal and signature.

See the *Ready to List and Construction Contract Award Guide (RTL Guide)* for more detail.

CHAPTER 15 – Final Project Development Procedures

Table of Contents

CHAPTER 15 – Final Project Development Procedures 15-3
SECTION 1 Contract Procedures 15-3
Prepare Project for Advertising – No District Director Delegation 15-3
Prepare Project for Advertising – District Director Delegation 15-3
Addenda 15-4
Advertise and Award 15-4
SECTION 2 Construction 15-5
Resident Engineer File 15-5
Survey File 15-6
Construction Activities 15-6
Coordination 15-7
Contract Change Orders 15-7
SECTION 3 Project Completion 15-8
Constructability Review 15-8
Contract Acceptance 15-8
Maintenance Agreements and Relinquishment Maps 15-8
Project History Files and As-built Plans 15-9
Archive-ready As-built Plans 15-9
Microfilming As-built Plans 15-10

CHAPTER 15 – Final Project Development Procedures

SECTION 1 Contract Procedures

Prepare Project for Advertising – No District Director Delegation

The Headquarters Division of Engineering Services-Office Engineer is responsible for verifying that all aspects of the plans, specifications, and estimate (PS&E) are complete before preparing the project for advertising. All permits must be current, right-of-way must be certified, freeway and cooperative agreements must be executed, and the necessary funds must be voted by the California Transportation Commission (CTC).

After all corrections have been made to the PS&E, the final product is assembled and "boilerplate" language is added (legal language specific to a particular type of project). The Basic Engineering Estimating System (BEES) estimate (final engineer's cost estimate) is locked after a draft contract is ready for advertisement once Ready to List (RTL) requirements are met. A locked BEES can only be changed by the Headquarters Division of Engineering Services-Office Engineer. All contract documents are then reproduced for distribution to prospective bidders.

Prepare Project for Advertising – District Director Delegation

The authority to execute all documents leading to project advertising for selected projects has been delegated to the District Directors as shown in their respective "Authority to Advertise District Delegation" delegations from the Chief Engineer. When the District Director elects to exercise their delegation, they will certify that plans, specifications, and estimate of cost, and all forms necessary to advertise and fund the project have been prepared, executed and are on file in Caltrans. The project must be in final form and ready for advertisement.

Addenda

After the project has been listed for advertising, additional information may become available that would affect the bidding process. At the request of the district, an addendum may be issued by the Headquarters Division of Engineering Services-Office Engineer prior to bid opening to notify prospective bidders of any errors, omissions, or conflicts in the bidding documents.

Advertise and Award

The duration times for advertising are based on the cost and complexity of the project. These time durations are summarized in the *Ready to List and Construction Contract Award Guide (RTL Guide)*. Bid openings for projects (except "Minor B" projects) are coordinated by the Headquarters Division of Engineering Services-Office Engineer. After the opening, the contract is awarded to the lowest responsive and responsible bidder, provided that sufficient funding is available. The district is responsible for providing the Headquarters Division of Engineering Services-Office Engineer with a recommendation to award within five days of the bid opening. The contract is executed by the contractor and Caltrans. The Headquarters Division of Legal approves the contract for the Attorney General, and the contractor is notified of contract approval. For further information on the bid review and contract approval process, see the *Ready to List and Construction Contract Award Guide (RTL Guide)*.

SECTION 2 Construction

Resident Engineer File

After the contract is advertised and awarded, the project is ready for construction. The project engineer (PE) is responsible for furnishing the resident engineer (RE) with any pertinent project data required to administer the construction contract. The information is compiled in a resident engineer file and appropriate items to be placed in this file include, but are not limited to the following:

- Calculations (quantity calculations, structures movement rating sheets, etcetera)
- Right-of-way clearance letters
- Foundation studies and geology report
- Falsework clearances and calculations
- Agreements and permits
- Hazardous waste contracts (if hazardous waste is not removed prior to construction)
- Right-of-way contracts and obligations
- Project cost estimates
- Safety review report
- Aesthetics report
- Drainage report
- Materials handouts, including tests
- Permits, licenses, agreements, certifications (PLAC), and approvals
- Final environmental review and reevaluation, listing required mitigation (include environmental commitment record)
- Funds request and CTC vote
- Contract documents
- Exceptions to mandatory and advisory design standards
- PE (designer) notes
- Preliminary progress schedule, structures working day schedule, etcetera
- Cross sections
- Pending relinquishment actions (to inform right-of-way engineering four months before completion of construction)
- Risk register and Risk Register Certification Form

Refer to Appendix GG – Project Data Checklists for a Resident Engineer File Checklist.

Survey File

The survey file is a compilation of electronic design data generated during the development of the plans, specifications, and estimate.

The engineer of record, typically the PE, provides an accurate and complete survey file to the project surveyor by the Ready to List date. The district office engineer verifies the delivery of the survey file upon submittal of a completed verification of survey file delivery letter. The survey file data must be accurate, complete, and timely to minimize costly delays, claims, contract change orders, and re-staking charges during construction. The survey file should be included in all constructability reviews and throughout the development of projects without constructability reviews, e.g. minor projects, to drive consultation and communication on project issues.

The survey file is critical to the construction of a project as:

- The project surveyor uses the survey file to prepare construction staking packages for the survey crews, enabling them to complete the RE's construction staking requests in a timely and effective manner.
- A review of the survey file by the project surveyor provides an important quality control check of project constructability prior to construction.
- The survey file facilitates the use and integration of automated systems; e.g., computer-aided design and drafting (CADD) systems, automated surveying systems, machine guidance construction technology, etc.

The PE and the project surveyor are encouraged to work together to determine the level of information to be included in the survey file as soon as the scope of the project is well defined. These actions help identify and resolve problems during the design phase and assure the survey file and contract plans are consistent by contract approval.

For additional guidance on developing survey files refer to the Appendix QQ – Preparation Guidelines for Survey File and the *CADD Users Manual*.

Construction Activities

Activities performed during the construction of a project are described in the *Construction Manual*. These activities include the following:

- Inspection for compliance to contract plans and specifications.
- Testing of materials.

- Public relations.
- Measurement and payment for work performed.
- Processing contract change orders.
- Oversight for local agency contracts.
- Maintaining contract and permanent records.

Coordination

Prior to the start of construction, a meeting must be held between the RE and the contractor (and appropriate subcontractors) to discuss the plan of work. To review the project, a separate preconstruction meeting should be held between the project manager (PM), the PE, the RE, the environmental coordinator, and any other interested parties. Topics to be discussed include right-of-way obligations, materials sites, traffic handling, environmental commitments, potential maintenance problems, project scheduling, as well as items found in Chapter 13 – Project Related Permits, Licenses, Agreements, Certifications, and Approvals.

During the course of constructing the project, it may be necessary to hold subsequent meetings to discuss complicated design features or to resolve unanticipated problems. The PM must monitor the progress of the contract to ensure adherence to all permits, right-of-way obligations, agreements, environmental mitigation, and other project commitments.

Contract Change Orders

If revisions to design features are required, the contract change orders (CCO) must have review and concurrence by the PE and must be approved by the PM before execution. If the revisions require exceptions to mandatory or advisory design standards, the exceptions must be approved following the procedures in Chapter 21 – Exceptions to Design Standards.

The RE is responsible for contacting the environmental unit to determine the impact of proposed changes to any environmental obligations. Proper coordination between all involved parties is needed to expedite decisions and minimize delays to the contractor.

SECTION 3 Project Completion

Constructability Review

See Chapter 8 – Overview of Project Development, for information on meeting constructability requirements. Include a discussion of the positive and negative aspects of the project and changes that were required for the project.

Contract Acceptance

The improvements belong to the contractor for the time period during construction. Upon completion of construction, the resident engineer recommends acceptance of the contract as the representative of the State. The Headquarters Division of Construction ultimately accepts the construction contract for the Director of Caltrans. Local agency officials are involved in the process for those projects financed or constructed by the local agencies, but acceptance rests with the State for the portion of the project that is within the State right-of-way. When the contract includes work on local agency facilities, the local agency officials must be involved in the acceptance reviews.

Upon contract acceptance, the RE must assemble the final construction project records as described in the *Construction Manual*. The proposed final estimate is then transmitted to the contractor for acceptance. Claims from the contractor for specific items of work or liquidated damages may result in a lengthy process for reviews and negotiations.

Maintenance Agreements and Relinquishment Maps

The acquisition of right-of-way may include property that is no longer required at end of project. Such excess acquisitions may have resulted from total parcel acquisitions, retention of property for the contractor's yard or State construction office, use of land for detours, the purchase of material sites, etc. It is now necessary to dispose of these excess lands. For more details, see Chapter 26 – Disposal of Rights-of-Way for Public or Private Road Connections.

Projects may also involve improvements that will be relinquished to the local agency upon completion of construction. Relinquishment procedures include the preparation of maintenance agreements and maps. (See Chapter 25 – Relinquishments.)

Project History Files and As-built Plans

After the construction contract improvements are accepted on behalf of the State of California, the project history file is prepared. For this file, the RE accumulates construction contract records and the PE contributes pertinent planning and design data. To determine which records should be included in this file, see Chapter 7 – Uniform File System. The project manager is responsible for insuring that the compiling and archiving of this information is accomplished.

The RE must prepare the draft as-built plans to reflect all pertinent changes or corrections made during the life of the project contract. If the plans have not been edited to indicate the as-built conditions, future misinterpretation of existing field conditions may result.

As-built plans for projects with fewer than 300 total plan sheets (roadway and structure combined) must be submitted to the Document Retrieval System (DRS) unit at the Headquarters Division of Design-Office of Computer Aided Drafting Design and Engineering Global Information System Support (Office of CADD and Engineering GIS Support) within 180 days from construction contract acceptance (CCA). As-built plans for projects with more than 300 plan sheets must be submitted within 270 days from construction contract acceptance. The date of entry into the DRS will be used as the milestone date indicating the as-built plan set is completed.

Archive-ready As-built Plans

Archive-ready as-built roadway plans are to be completed and submitted by the district to the DRS unit. Archive-ready as-built structure plans are to be completed by Headquarters Division of Engineering Services and submitted through Structure Maintenance and Investigations to the DRS unit. All projects (including minor projects implemented or funded by others) are to be submitted electronically in a tiff format for entry into the DRS. It is the responsibility of the districts and Headquarters Division of Engineering Services to obtain these archive-ready as-built plans from the consultants and local agencies preparing these products.

Structure as-built plan sheets will also continue to be entered into the Bridge Inspection Retrieval Information System (BIRIS) by Structure Maintenance and Investigations, using existing procedures. Encroachment permit as-built plans will continue to be submitted using existing procedures. The backlog of as-built plans shall be handled according to procedures found in the *CADD Users Manual*.

As-built standards and procedures for creating electronic as-built sheets from the as-awarded computer aided-drafting design files can be found in the following manuals:

- *Plans Preparation Manual*.
- *CADD Users Manual*.
- *Construction Manual*.
- *Bridge Design Details Manual*.
- *Bridge Memo to Designers*.

Microfilming As-built Plans

The microfilming of as-built plan sheets follows the procedures outlined in the *CADD Users Manual*. The microfilm set includes microfilm from the district and Structure Maintenance and Investigations as-built files.

Microfilming of encroachment permit as-built plan sheets is the responsibility of the Headquarters Division of Business, Facilities and Security-Office of Administrative Services-Microfilm Unit.

Part 3

Specific Project Development Procedures

CHAPTER 16 – Cooperative Agreements

Table of Contents

CHAPTER 16 – Cooperative Agreements 16-3
ARTICLE 1 Introduction and Definitions 16-3
Reference Information 16-3
Introduction 16-3
Definitions 16-4
ARTICLE 2 Laws 16-7
California Laws 16-7
ARTICLE 3 Policies 16-8
General 16-8
Authorizing Documents 16-8
Cooperative Agreement Reports 16-8
ARTICLE 4 Essential Procedures 16-9
Conception of Cooperative Agreements 16-9
Development of Cooperative Agreements 16-9
Performance Measure 16-10
Conflict Resolution 16-10
Risk Resolution 16-10
Execution of Cooperative Agreements 16-11
Amendment to Agreements 16-12
Termination of Cooperative Agreements 16-12
Responsibility of District Project Manager 16-13
For Further Reference 16-13

CHAPTER 16 – Cooperative Agreements

ARTICLE 1 Introduction and Definitions

Reference Information

Some of the references found in this chapter have hyperlinks that connect to Caltrans intranet pages which are not displayable to the general public. Until such time that the specific reference becomes available on the internet, the user will have to contact their district liaison, Caltrans project manager, or the appropriate Headquarters division to inquire about the availability of the reference.

Introduction

According to California law, Caltrans is the agency assigned to plan, design, construct, operate, and maintain the State Highway System. Whenever there is an exchange of effort, funding, or materials between Caltrans and a public entity regarding the planning, design, or construction of an improvement or facility on the State Highway System, a cooperative agreement is required.

A cooperative agreement is a legally-binding contract that states the rights, duties, decisions, and commitments made between Caltrans and one or more public entities to plan, design, and construct projects in accordance with the authorizing documentation.

Cooperative agreements ensure that partners complete all their obligations according to Caltrans' policies and procedures, applicable Federal Highway Administration (FHWA) policies and procedures, and State and federal laws.

Cooperative agreements must always be signed by all partners prior to the beginning of any exchange of effort, funding, or materials.

Caltrans has no legal authority to pay for costs incurred by another partner in the absence of a cooperative agreement. Likewise, Caltrans cannot seek reimbursement for performing work on a cooperative project prior to having an executed cooperative agreement.

Definitions

Initial draft cooperative agreement – is documented by the district after the district and partner negotiate and agree on a project's terms and conditions. Once drafted, the partner will review it and provide comments to the district.

Standard cooperative agreement – is a two-partner agreement between Caltrans and a public entity involving one or more project development and construction components of a design-bid-build project type. The standard cooperative agreement is the most common type of cooperative agreement, about 80 percent of all cooperative agreements developed annually.

Formal Cooperative Agreements

Though the standard cooperative agreement is by far the most common agreement, cooperative agreements are also prepared for the following situations:

Project development agreement – documents the terms and conditions between Caltrans and one or more public entities to complete the project development and construction components of a design-bid-build project type.

Relinquishment agreement – is a type of cooperative agreement. It documents the terms and conditions under which Caltrans relinquishes 1) any portion of a State highway or facility, including outer highways, to either a city or county 2) a park-and-ride lot to either a county transportation commission or a regional transportation planning agency (RTPA).

Highway improvement agreement (HIA) – allows private entities to design and construct projects on the State Highway System that exceed $1,000,000 in capital construction cost and are 100 percent funded by the private entities. Caltrans is reimbursed for all of its oversight costs. Refer to the *Cooperative Agreement Manual* and the *Encroachment Permits Manual* for additional information.

Escrow agreement – is used in conjunction with certain highway improvement agreements to ensure funding is available when private entities perform work on State Highway System projects financed by private funds. An escrow agreement outlines the terms and conditions under which such funds will be deposited and held and/or disbursed. Refer to the *Cooperative Agreement Manual* for additional information.

Mitigation agreement – documents the terms and conditions, and often long-term commitments, related to mitigating the impact caused by a project. Refer to the *Cooperative Agreement Manual* for additional information.

Improvement agreement – is developed when a public entity wants to modify or add scope to a project that is sponsored and administered by Caltrans. The public entity will contribute funds that equal the change from the original scope.

Local contribution agreement – is developed when a public entity is willing to contribute funds toward a project that is sponsored and administered by Caltrans. These funds are provided to support the project as a whole, without the intent of modifying or adding to the scope of the project.

State Highway Operation and Protection Program (SHOPP) minor funds contribution agreement – gives Caltrans the ability to transfer SHOPP minor funds to a project on the State Highway System that is administered by a public entity using Caltrans' encroachment permit process. The funds may only be spent on construction capital costs.

Authority to reimburse agreement – provides Headquarters Division of Accounting the necessary authority to pay out certain types of "local capital outlay" funds (including but not limited to State Transportation Improvement Program [STIP]/Regional Improvement Program [RIP], STIP/Transportation Enhancement [TE], and bond funds).

Project initiation document (PID) agreement – documents the terms and conditions between Caltrans and a public entity for the development of a project study report (PSR) when Caltrans prepares the PSR for a local agency or Caltrans reviews and approves the PSR developed by a local agency. This agreement can be used for either a PSR or project study report-project development support (PSR-PDS) but cannot be used for a project study report-project report (PSR-PR). Note that the PID component cannot be included as part of a project development agreement.

Design-build agreement – documents the terms and conditions between Caltrans and a public entity related to a design-build project type. Contact the Headquarters Division of Design Office of Special Projects for additional information.

Intergovernmental agreement – is used for cooperative work with other states.

Federal Agency agreement – is used for cooperative work with federal agencies and is governed by State and federal laws. Federal agencies include, but are not limited to, US Army Corps of Engineers, Immigration and Naturalization Services, Department of Justice, US Water and Power Services, Department of Defense, and US Forest Service. The type of agreement will vary by the federal agency, and Caltrans may agree to use the federal agency's standard template.

Other Formal Agreements

The following agreements are routinely developed by Caltrans, but not through the Headquarters Division of Project Management Office of Cooperative Agreements:

Interagency agreement – is formed between Caltrans and another State agency, State university, or the University of California. Contact the Headquarters Division of Procurement and Contracts for additional information.

Maintenance agreement – is formed between Caltrans and a city or county; it documents the shared maintenance or operation responsibilities of roadway facilities including highways, structures, toll bridges, and appurtenant facilities on the State Highway System. Contact the Headquarters Division of Maintenance for additional information.

Freeway agreement – is formed between Caltrans and a city or county. It documents the features of a freeway at its ultimate capacity and how the local streets are adjusted in relationship to the freeway. Contact the Headquarters Division of Design Office of Project Development Procedures for additional information.

Encroachment permit – is an agreement for projects on the State Highway System with a total project cost under $1,000,000 that are funded by others. (On occasion, projects between $1,000,000 and $3,000,000 with a simple scope may be advanced through an encroachment permit.) Contact the Headquarters Division of Traffic Operations for additional information.

Utility agreement – is used whenever Caltrans is paying or receiving payment for all or a portion of the cost of relocating a utility facility, regardless of who performs the work. The utility agreement uses form RW 13-5. Contact the Headquarters Division of Right of Way and Land Surveys for additional information.

Right-of-way agreement – is used to acquire and/or convey real property interests for transportation projects, including, but not limited to, right-of-way contracts, rental

and lease agreements, transfers of jurisdiction, and excess land purchase agreements. Contact the Headquarters Division of Right of Way and Land Surveys for additional information.

Private-public partnerships (P3s) agreement – is formed between Caltrans, a public agency, and a private sector entity to allow for greater flexibility for delivering and financing projects on the State Highway System. Contact the Headquarters Division of Design Office of Special Projects for additional information.

Other

Memorandum of understanding (MOU) – is used to outline each entity's intentions regarding any type of arrangement. It typically has general terms and address' items on a program or corridor level. It is not legally binding and cannot be used to commit resources or funding.

ARTICLE 2 Laws

California Laws

California Streets and Highways Code, Section 114

Section 114 indicates:

> Caltrans may enter into a cooperative agreement with a city, county, or other public entity to perform the work or share the cost of the work for the construction, improvement, or maintenance of any portion of a State highway.

Caltrans practice is that project development and right-of-way acquisition are aspects that also may be included in the cooperative agreement.

California Streets and Highways Code, Section 130

Section 130 indicates:

> Caltrans and any city, county, or joint highway district may enter into a contract regarding the proportion of the expense of the acquisition, construction, improvement, or maintenance of any State highway. Any such contract may provide for the advancement of funds, for the acquisition of rights-of-way and for the doing of the work.

ARTICLE 3 Policies

General

An executed cooperative agreement is required prior to the exchange of any effort, funding, or materials.

A cooperative agreement abides by State and applicable federal law and assures that all partners will perform the scope, cost, and schedule established in the authorizing documentation in accordance with Caltrans policies and procedures.

Deputy Directive DD-90 – Funding of Quality Management Work on State Highway Projects, requires that Caltrans perform independent quality assurance at its own cost for projects on the State Highway System when another government agency is the project sponsor.

Deputy Directive DD-102 – Cooperative Agreements, mandates that partners mutually agree on a completion date for a cooperative agreement. It also requires that certain important milestones (also referred to as flags) are tracked within a project work plan. The directive presents a formal resolution process and mandates the implementation of a performance measure to track the creation and review of a cooperative agreement so that once an initial draft cooperative agreement is developed by the district, it will be ready for execution by all partners within 60 calendar days.

Project Management Directive PMD-20 – Cooperative Agreement Funding Commitment Process; Capital Outlay, assigns the district project manager as the responsible agent to ensure that the funding details documented in the cooperative agreement funding summary are accurate and that the cooperative agreements are ultimately closed out once all obligations and commitments have been met.

Authorizing Documents

The need of a cooperative agreement is typically described in an authorizing document, such as a project initiation document (PID) or project report (PR).

Cooperative Agreement Reports

If the authorizing document is silent on the issue of a cooperative agreement and it is later determined that a cooperative agreement is necessary, a cooperative agreement

report (CAR) will be used to document the justification for the need to enter into a cooperative agreement with another partner. A cooperative agreement report is not an authorizing document from which to build a project; it only provides justification for the need of a cooperative agreement for that project. Refer to the *Cooperative Agreement Manual* for additional information.

ARTICLE 4 Essential Procedures

Conception of Cooperative Agreements

The cooperative agreement milestone (CAM) date is the date both Caltrans and the public entity agree the cooperative agreement must be executed in order to avoid a project impact such as a schedule delay or loss of funding. Each project that requires a cooperative agreement must have a flag in the project work plan identifying the cooperative agreement milestone date.

Once a cooperative agreement milestone date is established, the district will assign a unique cooperative agreement number to the proposed agreement and enter that information into the statewide cooperative agreement database. At the same time, the partners will begin negotiating the terms, conditions, and commitments of the cooperative agreement.

Development of Cooperative Agreements

When all the necessary decisions have been made, the district will document them in an initial draft cooperative agreement. This document will be created by using one of the Headquarters-approved cooperative agreement templates or by using the automated Project Agreement Construction Tool (PACT). Once completed, the initial draft cooperative agreement will be simultaneously circulated to the district and partnering public entity.

When comments to the initial draft cooperative agreement are returned to the district from the partnering public entity, the proposed changes must first be reviewed and approved by the district content expert. Next, if the changes are policy related, the document must receive concurrence by the corresponding Headquarters policy owner. Proposed changes that are not approved by the district content expert or the Headquarters policy owner may enter an expedited conflict resolution process in hopes of quickly resolving any impasse. Once all the policy issues have been resolved, the cooperative agreement is submitted to Headquarters Division of Project

Management Office of Cooperative Agreements. The cooperative agreement is subsequently forwarded to Headquarters Division of Legal and Division of Accounting for review and approval.

Performance Measure

No more than 60 calendar days will pass from the time the district receives the marked-up initial draft cooperative agreement from the partnering public entity to the time all partners declare the cooperative agreement is complete and ready for execution.

Conflict Resolution

The conflict resolution process involves a series of escalating meetings, which are initiated and facilitated by the district project manager to resolve any impasse in a structured and timely manner.

Level One – Within two weeks of Caltrans' receipt of the initial draft cooperative agreement from the partners, the Caltrans project manager will arrange a meeting with key project level staff, necessary Headquarters policy owners, and partner representation to resolve the impasse.

Level Two – If there are still unresolved issues after the Level One meeting, the Caltrans project manager will arrange a second meeting within two weeks of the Level One meeting, with district management, key staff, necessary Headquarters management, and partner representatives.

Level Three – If there are still unresolved issues after the Level Two meeting, the Caltrans project manager will arrange a third meeting within two weeks of the Level Two meeting with district executive management, key staff, necessary Headquarters executives, and corresponding partner executives. The outcome of the Level Three meeting is either an executable cooperative agreement or mutually agreed upon project changes that result in an executable cooperative agreement. When all possible solutions have been exhausted, effort on the current cooperative agreement may cease.

Risk Resolution

Occasionally, decisions or arrangements documented in an initial draft cooperative agreement may expose Caltrans to a higher level of risk than normal. To assure that

district executive management is aware of any unusual risks, and to facilitate a timely and educated response, each district will assign a contact that can serve as the risk liaison for cooperative agreements. The district risk liaison should be at an executive level and have access to the District Director. The District Director has the ability to make the final determination regarding most risk related issues.

Execution of Cooperative Agreements

Automated Template (Project Agreement Construction Tool)

If districts use the tool to create a cooperative agreement and no changes are made to the pre-approved language during the initial draft review rounds, then the cooperative agreement is ready to be signed by the public entity, followed by the district budget manager, and then the District Director without a formal Headquarters review. If a separate funding summary is included as part of the cooperative agreement, it must be signed by the following people in this order: a Headquarters Accounting representative, the public entity, the district budget manager, and the District Director.

If districts use the tool, but choose to modify the standard language during the initial draft review rounds or any time after, the districts will first vet the changes according to the Development of Cooperative Agreements sub-article. Next, they will submit the cooperative agreement to Headquarters Division of Project Management Office of Cooperative Agreements for review and approval. Once completed, and no further changes occur, the cooperative agreement is ready to be signed by the following people in this order: the public entity, the district budget manager, and the District Director.

Manually Assembled Template

Whenever districts choose to develop cooperative agreements manually by using the Headquarters-provided templates, regardless of whether changes occurred during the initial draft cooperative agreement review rounds or not, the cooperative agreements will be submitted to Headquarters Division of Project Management Office of Cooperative Agreements for review and approval. Once completed, and no further changes occur, these cooperative agreements are signed by the following people in this order: Headquarters Division of Legal representative, a Headquarters Division of Accounting representative, the public entity, the district budget manager, and the District Director.

Amendment to Agreements

A cooperative agreement can be amended only through the execution of a separate document called an "Amendment to Agreement." This is a formal, legally binding contract. Amendments are used to add, modify, or remove terms, facts, or conditions in order to keep the cooperative agreement current and relevant.

Standard cooperative agreements developed with the Project Agreement Construction Tool have a provision that allows specific funding details to be recorded on a separate document called a "Funding Summary." Instead of having a formal amendment for funding detail changes, a new funding summary provides the latest funding details. After all partners sign and date the funding summary, the new funding summary is included as part of the cooperative agreement.

Termination of Cooperative Agreements

Every cooperative agreement must terminate once all the terms and conditions of the agreement have been fully satisfied. Some types of cooperative agreements (including relinquishments, PIDs, local contributions, SHOPP minor funds contributions, authority to reimburse, and mitigation and escrow agreements) terminate after a pre-determined date has passed or a final action such as a fund transfer or a report delivery has occurred.

Most cooperative agreements are terminated by a separate document called a "Cooperative Agreement Closure Statement," which is signed and dated by all partners after all the terms and conditions of the cooperative agreement have been met, including:

- All scope, cost, and schedule commitments in the cooperative agreement and any amendment to the agreement
- Caltrans acceptance and approval of all final deliverables, and receipt of all project history documentation
- District project manager verification that there are no outstanding obligations
- Headquarters Division of Accounting verification that all final accounting is completed

Responsibility of District Project Manager

The district project manager is responsible for:

- placing a flag in the project work plan establishing the cooperative agreement milestone date;
- initiating the cooperative agreement if project requires one;
- managing the terms and conditions of the cooperative agreement;
- initiating the conflict resolution process in resolving any impasse of the cooperative agreement;
- communicating regularly with Headquarters Division of Accounting and district project control staff to assure project/financial data is property tracked and managed;
- ensuring the funds committed are programmed;
- ensuring the "Funding Summary" is updated to align with the cooperative agreement when applicable;
- ensuring that the cooperative agreement is executed;
- ensuring that an amendment is executed should the cooperative agreement require one;
- closing out the cooperative agreement once all obligations have been fully satisfied;
- ensuring that a wet-ink cooperative agreement (including any corresponding amendments and closeout statements) is filed in the district and available.

For Further Reference

Refer to the *Cooperative Agreement Manual*, visit http://onramp.dot.ca.gov/hq/projmgmt/index.jsp?pg=115, or contact the Headquarters Division of Project Management Office of Cooperative Agreements for more information.

CHAPTER 17 – Encroachments and Utilities

Table of Contents

CHAPTER 17 – Encroachments and Utilities..... 17-3
SECTION 1 Encroachments..... 17-3
ARTICLE 1 General 17-3
ARTICLE 2 Definitions 17-4
ARTICLE 3 Laws 17-7
Federal Laws..... 17-8
California Statutes 17-9
ARTICLE 4 Encroachment Policies 17-14
Encroachments Prohibited on All State Highways..... 17-15
Utility Encroachments Prohibited within Access Control Right-of-Way 17-15
Encroachments Permitted Within Conventional Highway Right-of-Way 17-17
Encroachments Permitted within Access Control Right-of-Way 17-17
Non-Utility Encroachments within Access Control Right-of-Way..... 17-18
ARTICLE 5 Access Restrictions..... 17-20
Issuance of an Encroachment Permit for Maintenance Access 17-20
Locked Gate Accesses and Pedestrian Openings 17-20
Emergency Access from Freeways and Expressways 17-21
SECTION 2 Utility Policies 17-22
ARTICLE 1 General 17-22
ARTICLE 2 Policies 17-22
Exempt Projects 17-23
Exempt Utilities 17-24
Projects for Which Positive Location is Not Required..... 17-24
Utility Locating for Construction Area Signs..... 17-25
ARTICLE 3 Locating Requirements..... 17-25
Overview..... 17-25
Methods of Locating..... 17-27
Request to Owners for Utility Locating..... 17-28
Service Contract for Utility Locating 17-28
Surveying..... 17-28
ARTICLE 4 Clearance and Offset Requirements 17-28
New and Relocated Subsurface Utility Installation Standards 17-29
Existing Subsurface Utilities 17-29
Utility Clearance Standards 17-29

ARTICLE 5 Alternatives to Relocation 17-30
Protecting During Construction 17-30
Rearranging During Construction 17-30
ARTICLE 6 Certify Policy Compliance 17-30
Utility Policy Certification 17-31
ARTICLE 7 Installations by Encroachment Permit 17-31
ARTICLE 8 Retention of Records 17-32
SECTION 3 Exception Requests 17-33
Overview 17-33
Request for an Encroachment Policy Exception 17-34
Request for a Utility Policy Exception 17-35

CHAPTER 17 – Encroachments and Utilities

This chapter addresses the policies and procedures for administration of encroachments, as well as the placement and protection of utilities within the State highway right-of-way. There are three sections in this chapter. Section 1, "Encroachments," presents Caltrans' encroachment policies and specific prohibitions to encroachments within Caltrans' right-of-way. Section 2, "Utility Policies," addresses the policies and procedures for ensuring that transportation projects have a clear and safe right-of-way through the proper placement, protection, relocation, abandonment, or removal of utilities. Section 3, "Exception Requests," covers the requirements for obtaining a policy exception. The primary purpose of these policies is to protect both the public and highway workers from the hazards of a damaged, exposed, cut, or penetrated utility. The secondary purpose is to protect the public's investment in the highway system.

SECTION 1 Encroachments

ARTICLE 1 General

Caltrans allows encroachments in the State highway right-of-way in accordance with federal and State regulations. Encroachments allow temporary use of the State right-of-way for purposes other than transportation by a public utility, public entity, or private party. Encroachments include any temporary break in access or other use of the highway right-of-way including grading or removing materials by public agencies, developers, or private individuals.

Those that desire to occupy highway right-of-way must prepare an encroachment permit application and submit all required documentation and exhibits to the Caltrans district permit engineer. The district permit engineer evaluates the applicable policies and assesses the potential impacts of proposed encroachments on the operation and safety of the highway.

The project team producing plans for highway improvements must identify and plot all facilities that are within the project limits (including State-owned facilities) and determine if the installations are consistent with these encroachment policies or if the

facilities must be modified or relocated outside the right-of-way. For the districts that have the specialty utility engineering service group, the utility engineering workgroup (UEW) can take on these project engineer responsibilities.

The project team or utility owner must submit electronic files (vector files) of the location data for any installation (including relocation), and any location data collected on existing utilities within the project limits for inclusion in the Caltrans utility database.

Utility owners with prior rights detailed in a joint use agreement (JUA) or consent to common use agreement (CCUA) may receive direct access to the highway right-of-way to conduct maintenance; the type of access is described within the agreement. The utility owner must provide a copy of the documentation of the prior right when submitting the permit application.

Caltrans authorizes encroachments in the highway right-of-way through the encroachment permit process. A permit is issued to the permittee for the purpose of providing a notice and record of work. For information on applying for and obtaining an encroachment permit, see the *Encroachment Permits Manual*.

ARTICLE 2 Definitions

Access control – the full or partial restriction of access to owners or occupants of abutting lands to or from a highway. Also see *Highway Design Manual (HDM)* Topic 104 "Control of Access."

Approximate location – a strip of land not more than 24 inches on either side of the exterior surface of the utility. Note that Caltrans uses the terminology "approximate location" to describe "tolerance zone" as used in *California Government Code*, Section 4216(u).

Electronic detection – the detection of subsurface utilities by using electronic signals to determine the horizontal and/or vertical location.

Encasement – a protective pipe or sleeve that surrounds and protects a carrier pipe.

Encroachment – the temporary use of State right-of-way. *California Streets and Highways Code*, Section 660(b) states: "Encroachment" includes any tower, pole, pole line, pipe, pipe line, fence, billboard, stand or building, or any structure, object of any kind or character not particularly mentioned in this section, or special event,

which is in, under, or over any portion of the highway. "Special event" means any street festival, sidewalk sale, community-sponsored activity, or community-approved activity.

Exact location – the location of a subsurface utility obtained by the actual exposure and measurement at a specific point. Note that Caltrans uses the terminology "positive location" to describe "exact location" as used in *California Government Code*, Section 4216.4.

Excavation – any operation in which earth, rock, or other material in the ground is moved, removed, or otherwise displaced by means of tools, equipment, or explosives in any of the following ways: grading, trenching, digging, ditching, drilling, augering, tunneling, scraping, cable or pipe plowing and driving, or any other way. *California Government Code*, Section 4216(g)

Expressway – an arterial highway with at least partial control of access, which may or may not be divided or have grade separations at intersections.

Finished grade – the finished surface of a completed highway.

Freeway – a divided arterial highway with full control of access and with grade separations at intersections.

Grading plane – the surface of the basement material upon which the lowest layer of subbase, base, pavement surfacing, or other specified layer, is placed. In the absence of such, the upper surface of the ground or earthwork.

Hand digging – excavation performed manually with hand tools.

High priority utilities – include the following primarily derived from the *California Government Code*, Section 4216:

- Natural gas pipelines greater than 6 inches in diameter, or with normal operating pressures greater than 60 psig
- Petroleum pipelines
- Pressurized sanitary sewer pipelines
- High-voltage electric supply lines, conductors, or cables that have a potential to ground of greater than or equal to 60 kV
- Hazardous materials pipelines that are potentially harmful to workers or the public if damaged

Highway – a public right-of-way for the purpose of travel or transportation.

Longitudinal utility facility – a utility located parallel to or more than 30 degrees from normal to the highway's alignment and within the highway right-of-way.

Positive location – the determination of the horizontal and vertical location of a utility by following the requirements of Section 2, Article 3 "Locating Requirements."

Pothole – See test hole.

Project engineer – in the context of this chapter, is a California registered civil engineer who is in "responsible charge" of appropriate project development documents and the project design effort that ensures compliance to Caltrans' encroachment and utility policies.

Project limits – entire right-of-way width between "Begin Construction" and "End Construction."

psig – pounds per square inch gauge pressure.

Public utility – includes every common carrier, toll bridge corporation, pipeline corporation, gas corporation, electrical corporation, telephone corporation, telegraph corporation, water corporation, sewer system corporation, and heat corporation, where the service is performed for, or the commodity is delivered to, the public or any portion thereof. *California Public Utilities Code*, Section 216(a)

Regional notification center – includes, but is not limited to, the South Shore Utility Coordinating Council, the Under Ground Service Alert-Northern California (USA-Northern California) and the Under Ground Service Alert-Southern California (USA-Southern California).

Right-of-way – property (land and/or access rights) owned and operated by Caltrans for transportation purposes.

Roadbed – that portion of the roadway extending from curb line to curb line or shoulder line to shoulder line. Divided highways are considered to have two roadbeds.

Roadway – that portion of the highway included between the outside lines of the sidewalks, or curbs and gutters, or side ditches including also the appertaining

structures, and all slopes, ditches, channels, waterways, and other features necessary for proper drainage and protection.

Service line – portions of a utility that connect a customer, usually at the meter location, to the utility distribution points or supply system.

Test hole – excavation to expose a subsurface utility to obtain and confirm positive location.

Transverse utility facility – a utility located perpendicular to or less than 30 degrees from normal to the highway's alignment and within the highway right-of-way.

Utility engineering workgroup – a specialty service group of subject matter experts that provide utility plans, utility plan support, and stewardship of utility related data. For the districts that do not have a utility engineering workgroup, these responsibilities are performed by the project engineer.

Utility facility – any pole, poleline, pipe, pipeline, conduit, cable, aqueduct, or other structure or appurtenance thereof used for public or privately owned utility services or used by any mutual organization supplying water or telephone service to its members. *California Streets and Highways Code*, Section 700(b)

Utility matrix – a data table used to quantify information for each utility on a project. The headings and data entries should define the plan sheet number, owner, utility (type, size, pressure/voltage), location, notes, and other utility attributes including the American Society of Civil Engineers (ASCE) quality level of location information, potential conflict and action required (protect, relocate), when applicable.

ARTICLE 3 Laws

The California Legislature authorizes Caltrans to manage the safety and operational control of the State Highway System (SHS). In order to meet this responsibility, Caltrans requires any proposed encroachments, as well as any other access to the State Highway System, to be applied for by the encroachment proponent and reviewed by the Caltrans district encroachment permit office. All applications for encroachment or access must meet the policy requirements and follow the procedures outlined in this chapter.

Federal Laws

Title 23 United States Code Section 109(l)

Section 109(l) states:

> (1) In determining whether any right-of-way on any Federal-aid highway should be used for accommodating any utility facility, the Secretary shall—
>
> (A) first ascertain the effect such use will have on highway and traffic safety, since in no case shall any use be authorized or otherwise permitted, under this or any other provision of law, which would adversely affect safety;
>
> (B) evaluate the direct and indirect environmental and economic effects of any loss of productive agricultural land or any impairment of the productivity of any agricultural land which would result from the disapproval of the use of such right-of-way for the accommodation of such utility facility; and
>
> (C) consider such environmental and economic effects together with any interference with or impairment of the use of the highway in such right-of-way which would result from the use of such right-of-way for the accommodation of such utility facility.
>
> (2) For the purpose of this subsection—
>
> (A) the term "utility facility" means any privately, publicly, or cooperatively owned line, facility, or system for producing, transmitting, or distributing communications, power, electricity, light, heat, gas, oil, crude products, water, steam, waste, storm water not connected with highway drainage, or any other similar commodity, including any fire or police signal system or street lighting system, which directly or indirectly serves the public; and
>
> (B) the term "right-of-way" means any real property, or interest therein, acquired, dedicated, or reserved for the construction, operation, and maintenance of a highway.

Title 23 Code of Federal Regulations Section 645.205

Section 645.205 states:

> (a) Pursuant to the provisions of 23 CFR 1.23, it is in the public interest for utility facilities to be accommodated on the right-of-way of a Federal-aid or direct Federal highway project when such use and occupancy of the highway right-of-way do not adversely affect highway or traffic safety, or otherwise impair the highway or its aesthetic quality, and do not conflict with the provisions of Federal, State or local laws or regulations.

(b) Since by tradition and practice highway and utility facilities frequently coexist within common right-of-way or along the same transportation corridors, it is essential in such situations that these public service facilities be compatibly designed and operated. In the design of new highway facilities consideration should be given to utility service needs of the area traversed if such service is to be provided from utility facilities on or near the highway. Similarly the potential impact on the highway and its users should be considered in the design and location of utility facilities on or along highway right-of-way. Efficient, effective and safe joint highway and utility development of transportation corridors is important along high speed and high volume roads, such as major arterials and freeways, particularly those approaching metropolitan areas where space is increasingly limited. Joint highway and utility planning and development efforts are encouraged on Federal-aid highway projects.

(c) The manner is which utilities cross or otherwise occupy the right-of-way of a direct Federal or Federal-aid highway project can materially affect the highway, its safe operation, aesthetic quality, and maintenance. Therefore, it is necessary that such use and occupancy, where authorized, be regulated by transportation departments in a manner which preserves the operational safety and the functional and aesthetic quality of the highway facility. This subpart shall not be construed to alter the basic legal authority of utilities to install their facilities on public highways pursuant to law or franchise and reasonable regulation by transportation departments with respect to location and manner of installation.

(d) When utilities cross or otherwise occupy the right-of-way of a direct Federal or Federal-aid highway project on Federal lands, and when the right-of-way grant is for highway purposes only, the utility must also obtain and comply with the terms of a right-of-way or other occupancy permit for the Federal agency having jurisdiction over the underlying land.

California Statutes

California Streets and Highways Code Section 23.5

Section 23.5 states:

> "Freeway" means a highway in respect to which the owners of abutting lands have no right or easement of access to or from their abutting lands or in respect to which such owners have only limited or restricted right or easement of access. If, in the judgment of the commission or the director, the public interest would be advanced thereby, a freeway, as defined herein, may be denominated a "controlled access highway". In all other respects, the "controlled access highway" shall be subject to all provisions of this code pertaining to freeways.

California Streets and Highways Code Section 90

Section 90 states:

> The department shall have full possession and control of all state highways and all property and rights in property acquired for state highway purposes. The department is authorized and directed to lay out and construct all state highways between the termini designated by law and on the locations as determined by the commission.

California Streets and Highways Code Section 92.3

Section 92.3 indicates:

> There is a direct benefit to the State highway program for the proposed use of recycled water. The installation of water delivery facilities does not unreasonably increase any hazard to vehicles on the freeway or create problems of highway maintenance and repair.

California Streets and Highways Code Section 117

Section 117 states:

> Unless otherwise specifically provided in the instrument conveying title, the acquisition by the department of any right-of-way over any real property for state highway purposes, includes the right of the department to issue, under Chapter 3 (commencing with Section 660), permits for the location in the right-of-way of any structures or fixtures necessary to telegraph, telephone, or electric power lines or of any ditches, pipes, drains, sewers, or underground structures.

California Streets and Highways Code Section 660

Section 660 states:

> As used in this chapter:
>
> (a) "Highway" includes all, or any part, of the entire width of the right-of-way of a state highway, whether or not the entire area is actually used for highway purposes.
>
> (b) "Encroachment" includes any tower, pole, pole line, pipe, pipe line, fence, billboard, stand or building, or any structure, object of any kind or character not particularly mentioned in this section, or special event, which is in, under, or over any portion of the highway. "Special event" means any street festival,

sidewalk sale, community-sponsored activity, or community-approved activity.

California Streets and Highways Code Section 661

Section 661 states:

> In addition to persons, public corporations, and districts specified in this chapter, this chapter shall apply to all private corporations authorized by law to establish or maintain any works or facilities in, under or over any public highway. This chapter shall not limit the powers and duties vested by law in the Public Utilities Commission of this State, and in the event of any conflict with regard to the powers and duties given the department in this chapter, those of the Public Utilities Commission shall prevail.

California Streets and Highways Code Section 670

Section 670 indicates:

> Caltrans may issue written permits for a variety of encroachment activities outlined in Section 660 through Section 759.3.

California Government Code Section 4215

Section 4215 states:

> In any contract to which a public agency as defined in Section 4401 is a party, the public agency shall assume the responsibility, between the parties to the contract, for the timely removal, relocation, or protection of existing main or trunkline utility facilities located on the site of any construction project that is a subject of the contract, if such utilities are not identified by the public agency in the plans and specifications made a part of the invitation for bids. The contract documents shall include provisions to compensate the contractor for the costs of locating, repairing damage not due to the failure of the contractor to exercise reasonable care, and removing or relocating such utility facilities not indicated in the plans and specifications with reasonable accuracy, and for equipment on the project necessarily idled during such work. The contract documents shall include provisions that the contractor shall not be assessed liquidated damages for delay in completion of the project, when such delay was caused by the failure of the public agency or the owner of the utility to provide for removal or relocation of such utility facilities.
>
> Nothing herein shall be deemed to require the public agency to indicate the presence of existing service laterals or appurtenances whenever the presence of such utilities on the site of the construction project can be inferred from the

presence of other visible facilities, such as buildings, meter and junction boxes, on or adjacent to the site of the construction; provided, however, nothing herein shall relieve the public agency from identifying main or trunklines in the plans and specifications.

Nothing herein shall preclude the public agency from pursuing any appropriate remedy against the utility for delays which are the responsibility of the utility.

Nothing herein shall be construed to relieve the utility from any obligation as required either by law or by contract to pay the cost of removal or relocation of existing utility facilities.

If the contractor while performing the contract discovers utility facilities not identified by the public agency in the contract plans or specifications, he shall immediately notify the public agency and utility in writing.

The public utility, where they are the owner, shall have the sole discretion to perform repairs or relocation work or permit the contractor to do such repairs or relocation work at a reasonable price.

California Government Code Section 4216 through 4216.9

Section 4216(i) states:

(i) “Hand tool” means a piece of equipment used for excavating that uses human power and is not powered by any motor, engine, hydraulic, or pneumatic device.

Section 4216(j) states:

“High priority subsurface installation” means high-pressure natural gas pipelines with normal operating pressures greater than 415kPA gauge (60psig), petroleum pipelines, pressurized sewage pipelines, high-voltage electric supply lines, conductors, or cables that have a potential to ground of greater than or equal to 60kv, or hazardous materials pipelines that are potentially hazardous to workers or the public if damaged.

Section 4216(u) states:

(u) “Tolerance zone” means 24 inches on each side of the field marking placed by the operator in one of the following ways:

(1) Twenty-four inches from each side of a single marking, assumed to be the centerline of the subsurface installation.

(2) Twenty-four inches plus one-half the specified size on each side of a single marking with the size of installation specified.

(3) Twenty-four inches from each outside marking that graphically shows the width of the outside surface of the subsurface installation on a horizontal plane.

Section 4216.2(c) states:

(c) When the excavation is proposed within 10 feet of a high priority subsurface installation, the operator of the high priority subsurface installation shall notify the excavator of the existence of the high priority subsurface installation to set up an onsite meeting prior to the legal excavation start date and time or at a mutually agreed upon time to determine actions or activities required to verify the location and prevent damage to the high priority subsurface installation. As part of the meeting, the excavator shall discuss with the operator the method and tools that will be used during the excavation and the information the operator will provide to assist in verifying the location of the subsurface installation. The excavator shall not begin excavating until after the completion of the onsite meeting.

Section 4216.4 states:

(a) (1) Except as provided in paragraph (2), if an excavation is within the tolerance zone of a subsurface installation, the excavator shall determine the exact location of the subsurface installations in conflict with the excavation using hand tools before using any power-driven excavation or boring equipment within the tolerance zone of the subsurface installations. In all cases the excavator shall use reasonable care to prevent damaging subsurface installations.

(2) (A) An excavator may use a vacuum excavation device to expose subsurface installations within the tolerance zone if the operator has marked the subsurface installation, the excavator has contacted any operator whose subsurface installations may be in conflict with the excavation, and the operator has agreed to the use of a vacuum excavation device. An excavator shall inform the regional notification center of his or her intent to use a vacuum excavation device when obtaining a ticket.

(B) An excavator may use power-operated or boring equipment for the removal of any existing pavement only if there is no known subsurface installation contained in the pavement.

(3) An excavator shall presume all subsurface installations to be active, and shall use the same care around subsurface installations that may be inactive as the excavator would use around active subsurface installations.

(b) If the exact location of the subsurface installation cannot be determined by hand excavating in accordance with subdivision (a), the excavator shall request the operator to provide additional information to the excavator, to the extent that information is available to the operator, to enable the excavator to determine the exact location of the installation. If the excavator has questions about the markings that an operator has placed, the excavator may contact the notification center to send a request to have the operator contact the excavator directly. The regional notification center shall provide the excavator with the contact telephone number of the subsurface installation operator.

(c) (1) An excavator discovering or causing damage to a subsurface installation, including all breaks, leaks, nicks, dents, gouges, grooves, or other damage to subsurface installation lines, conduits, coatings, or cathodic protection, shall immediately notify the subsurface installation operator. The excavator may contact the regional notification center to obtain the contact information of the subsurface installation operator. If the operator is unknown and the damage or discovery of damage occurs outside the working hours of the regional notification center, the excavator may follow the instructions provided by the regional notification center through its Internet Web site or the telephone line recorded message.

(2) An excavator shall call 911 emergency services upon discovering or causing damage to either of the following:

(A) A natural gas or hazardous liquid pipeline subsurface installation in which the damage results in the escape of any flammable, toxic, or corrosive gas or liquid.

(B) A high priority subsurface installation of any kind.

(d) Each excavator, operator, or locator shall communicate with each other and respect the appropriate safety requirements and ongoing activities of the other parties, if known, at an excavation site.

ARTICLE 4 Encroachment Policies

Caltrans adopted the American Association of State Highway and Transportation Officials (AASHTO) October 2005 documents: *A Policy on the Accommodation of Utilities Within Freeway Right-of-Way*, and *A Guide for Accommodating Utilities Within Highway Right-of-Way*. The policies discussed in this article are consistent with these documents.

These policies are intended to provide a safe environment for traffic operations, maximize the transport of commercial goods, and improve safety during maintenance and construction.

During development of projects, various constraints may require deviation from these policies in the form of an encroachment policy exception. See Section 3 "Exception Requests," for a summary of the steps to request an encroachment policy exception.

Caltrans has no authority to allow the use of highway right-of-way by a private party without compensation or benefits. Private use of the highway right-of-way without compensation is considered a gift of public funds and is prohibited by the California Constitution, Article XVI, Section 6. This policy applies to all freeways, expressways, and conventional highways.

Encroachments Prohibited on All State Highways

The encroachments listed in this sub-article are prohibited on all State highways. The following prohibitions may be permitted as an encroachment policy exception if the encroachment permit applicant can justify that no other viable alternative exists. Prohibited encroachments include, but are not limited to:

- facilities that limit use of the right-of-way or increase the cost of future highway improvements.
- high priority utilities and pressurized facilities that are not encased within the highway right-of-way.
- changes in facilities that alter the conditions under which the original encroachment was approved.
- placement of utility facilities within the median area of any State highway.
- existing utilities proposed to remain in an existing tunnel when that tunnel is part of a highway project.
- drainage diversions.
- groundwater disposals.
- privately owned longitudinal facilities.

Utility Encroachments Prohibited within Access Control Right-of-Way

General

In addition to encroachments prohibited on all State highways, the encroachments listed in this sub-article are prohibited within access control right-of-way. The prohibitions may be permitted as encroachment policy exceptions if the encroachment can be justified and the following conditions are met for each type of encroachment.

Existing Longitudinal Utilities

Existing longitudinal utilities within a project's limits must be relocated to outside the State right-of-way unless project-specific analysis provides that they do not adversely affect the safety, design, construction, traffic operations, maintenance, or the stability of the highway and they meet the following conditions:

- The utility can be serviced, maintained, and operated without being accessed from the State highway, including ramps.
- Justification is provided to show that relocation of the utility, to outside of the access control right-of-way, is not viable.

If a longitudinal utility is proposed to remain in place within the right-of-way, a request for an encroachment policy exception must be approved prior to submittal of contract documents for advertisement.

Proposed Longitudinal Utilities

New utilities are not allowed to be installed longitudinally within the access control of freeways or expressways on a highway identified as part of the freeway and expressway system.

Utilities in Tunnels

New utilities are not allowed in tunnels. High priority utilities are not allowed in any tunnel under any circumstances (an encroachment policy exception will not be approved).

Utilities on Bridges

Existing utilities on bridges within a project's limits must be relocated to outside the State right-of-way unless project-specific analysis provides that they do not adversely affect the safety, design, construction, traffic operations, maintenance, or the stability of the bridge. New utilities on bridges are not allowed unless project-specific analysis provides that they do not adversely affect the safety, design, construction, traffic operations, maintenance, or the stability of the bridge and they meet the following conditions:

- The utility load can be supported by the bridge structure.
- The utility does not require routine maintenance.

- The utility construction and maintenance is scheduled during hours approved by Caltrans.
- The utility is supported by a backup system and emergency maintenance or repairs will not be required.
- The utility is under the California Public Utilities Commission jurisdiction or is publicly owned and provides a dedicated service to the public.
- The utility provides capacity to other companies that supply similar services.

For security purposes, high priority utilities should not be allowed on structures identified as most critical by the district.

Encroachments Permitted Within Conventional Highway Right-of-Way

The Caltrans district permit engineer may allow facilities within conventional highway right-of-way, subject to reasonable conditions that provide for the safety of the traveling public and allow for future improvement of the highway, if the applicant for an encroachment permit complies with the guidelines of the *Encroachment Permits Manual* and the encroachments are not prohibited under the preceding heading "Encroachments Prohibited on All State Highways." The utilities listed under the heading "Exempt Utilities" in Section 2, Article 2 are allowed within conventional highway right-of-way with an approved encroachment permit.

Encroachments Permitted within Access Control Right-of-Way

The encroachments in the headings listed in this sub-article may be permitted by the district permit engineer on access control highways. Proposed encroachments that do not meet the specified requirements may be permitted as an encroachment policy exception.

Telecommunications

Installations must comply with the provisions of the *Encroachment Permits Manual*.

Temporary Wells

Temporary wells for sampling ground water contamination may be installed within the highway right-of-way to facilitate the collection, documentation, or mitigation of contamination of the highway right-of-way only if alternate locations or means of access are unavailable or impractical due to terrain or environmental constraints and where such use will not adversely affect safety or cause damage to the State highway.

Temporary wells will be located in such a manner that they do not adversely affect the safety, design, construction, traffic operations, maintenance, or stability of the highway. The well head must be flush with the surrounding grade. The district environmental unit must receive a copy of all data collected and any subsequent report(s).

Temporary wells may require service, maintenance, and operation by the applicant. Temporary wells must be located such that access to the facility can be obtained by entering from a local road or private property. The intent of this requirement is for the service vehicle to park outside of the right-of-way.

Transverse Utilities

Crossings must not exceed 30 degrees from normal to the highway's longitudinal alignment, to the extent feasible and practicable.

These facilities must be located so there are no fixed objects or obstructions within the State right-of-way and they can be serviced, maintained, and operated from outside the State right-of-way. Utilities that cross Caltrans' right-of-way must comply with the requirements in Section 2 "Utility Policies."

Air Space Leases

Air space leases are subject to the provisions of the *Encroachment Permits Manual* and the *Right of Way Manual*. Lease requests are independently reviewed and approved by the district air space review committee.

Proposals for installation of infrastructure to generate sustainable energy sources, such as solar or wind power as well as wireless communications facilities are reviewed and processed as an air space lease.

Non-Utility Encroachments within Access Control Right-of-Way

General

Non-utility encroachments require an exception to policy and are considered on a case-by-case basis for any occupation or use. The Headquarters Division of Design, Office of Project Support is responsible for facilitating review and approval of encroachment policy exception requests with FHWA if the proposal is on an Interstate highway. This includes requests for:

- Appurtenances associated with rail systems
- Longitudinal pedestrian or bicycle paths owned and operated by others
- Discretionary elements
- Earthwork
- Access control fence breaches not associated with a utility

Access control fence breaches not associated with a utility are processed as locked gate accesses, see Section 1, Article 5 "Access Restrictions."

Discretionary Elements

Discretionary elements are not required for the safety, maintenance, or operation of the highway. Discretionary elements may occupy a single spot location or may be at multiple sites within the right-of-way. Standards for horizontal and vertical clearances and placement of fixed objects are listed in *Highway Design Manual* Topic 309.

Discretionary elements include, but are not limited to, the following:

- Non-Caltrans data collectors
- Energy generation components
- Historical monuments, markers, or placards
- Gateway monuments
- Transportation art (when free standing)
- Non-Caltrans owned sound attenuation devices
- Non-Caltrans radio-relay system components

The determination for placement, eligibility, and submittal of proposals for non-Caltrans data collectors, energy generation components, non-Caltrans owned sound attenuation devices, and non-Caltrans radio-relay system components will be made on a case-by-case basis.

For placement, eligibility, and submittal requirements for proposals of transportation art, gateway monuments, historical monuments, markers, or placards see Chapter 29 – Landscape Architecture. Exceptions to the established requirements will not be considered.

Earthwork

Grading, placement, or removal of material by others in the State right-of-way is prohibited. An encroachment policy exception may be approved to perform earthwork within the State right-of-way if the State benefits from one or all of the following:

- Improved sight distance
- Increased clear recovery zone
- Improved drainage
- Reduced maintenance

Caltrans will not approve requests to remove material solely to benefit a developer or individual, such as to eliminate the need by the developer or individual to import material to their private property or to improve visibility to a development.

ARTICLE 5 Access Restrictions

For controlled access right-of-way, breaks in access are restricted. During development of projects, various constraints may require deviation from these policies in the form of an encroachment policy exception. See Section 3 "Exception Requests," for a summary of the steps to request an encroachment policy exception.

Issuance of an Encroachment Permit for Maintenance Access

The Caltrans district permit engineer may issue an encroachment permit for maintenance access to the facility owner who lawfully maintains an encroachment where an easement, joint use agreement, consent to common use agreement, or other recorded property right exists.

Locked Gate Accesses and Pedestrian Openings

Locked gate access provides maintenance access to freeway and expressway rights-of-way and are considered an encroachment.

Locked gate access for use by Caltrans personnel or for utility maintenance access associated with a permitted installation requires the approval of the District Director. Locked gate access for use by others requires an encroachment policy exception. Additionally, locked gate access for wireless telecommunication airspace lease sites

requires approval from the district airspace review committee that has been delegated the responsibility for approval.

Breaks in State right-of-way access control fence to connect pedestrian facilities from adjacent properties requires an encroachment policy exception.

Every new or modified locked gate access or pedestrian opening on the Interstate System requires approval from the Federal Highway Administration (FHWA). Supplemental information for procedures and requirements to obtain FHWA approval is located in the *Interstate System Access Informational Guide*.

Emergency Access from Freeways and Expressways

Caltrans prohibits planned emergency access for existing, new, or expanded developments adjacent to the right-of-way. This policy preserves and protects the access control inherent to the freeway and expressway system. Emergency access must be planned for and provided by local streets or conventional highways outside the access control limits of freeways and expressways.

In responding to emergencies, fire districts, law enforcement agencies, or other emergency functions may cut or otherwise breach access control fences in order to quickly respond to an emergency. In such cases, they must secure an encroachment permit to replace fencing and restore the State right-of-way to pre-emergency conditions at their own expense.

SECTION 2 Utility Policies

ARTICLE 1 General

Caltrans is responsible for providing a safe transportation environment for its employees, the traveling public, and others. An important element of a safe environment is to provide clear and safe rights-of-way through the proper placement, protection, relocation, abandonment, or removal of utilities that may introduce hazards within the rights-of-way. Safety risks can occur if a utility is damaged, excavated, cut, or penetrated.

ARTICLE 2 Policies

These utility policies address the mandatory procedures for the placement and protection of utility facilities within the highway right-of-way. All utilities within the right-of-way must be shown on the contract plans for the entire project limits. The project limits are the limits of construction and are between the "Begin Construction" and "End Construction" and/or are the individual "Locations of Construction" as specified and depicted in the *Plans Preparation Manual*. Positive location is required for high priority utilities and approximate location is required for all other utilities for the entire project limits. Positive location and approximate location are used in the context as defined in Section 1, Article 2 "Definitions." Projects must have an approved utility policy exception to avoid the requirement for locating the utilities and depicting them on the contract plans.

The delineation of these utilities must be included in highway contract plans consistent with the *Plans Preparation Manual*, *CADD Users Manual*, *Standard Plans*, and *Standard Specifications*.

The policy requirements are applicable to all highway projects from the Project Initiation Document (PID) phase through the Plans, Specifications, and Estimate (PS&E) phase of a project, regardless of the project sponsor or funding source.

Various constraints may be discovered during plan development that cannot be reconciled and may result in the need for an exception to deviate from policy. The project engineer must submit an exception request for a utility policy exception for consideration. See Section 3 "Exception Requests," for a summary of the steps to request a utility policy exception.

The project engineer must provide the Caltrans district utility coordinator with a utility matrix for facilities within the project limits. The decision to relocate or protect utilities must be made by the project engineer after consultation with the project development team and the utility owner. See Appendix LL – Utility Policy Certification and Utility Matrix for the template.

For projects designed by Caltrans, coordination with the utility owner is conducted through the Caltrans district utility coordinator. On Caltrans administered projects, the district utility engineering workgroup (as applicable) is the recipient of the utility matrix which may have been prepared by others.

Exempt Projects

Projects that do not have any excavation, as defined in Section 1, Article 2 "Definitions," are exempt from the locating and depicting requirements. Projects that only include limited excavation are also exempt from the locating and depicting requirements, provided that the limited excavation is in conjunction with:

- Digging less than 6 inches below existing ground level outside the roadbed
- Digging within the existing limits of the pavement structural section within the roadbed
- Reconstruction of concrete or asphalt pavement driveways, sidewalks, curb ramps, curbs, gutters, and dike
- Reconstruction of bridge approach slabs
- Construction or reconstruction of guardrail, thrie beam barrier, and end treatments
- Installation of roadside signs and markers
- Hand digging or digging by air-lance, hydro-excavation, and vacuum excavation

Projects are not exempt when the proposed work includes:

- installation of push button assemblies or foundations for lighting.
- transition railing or anchor blocks for guardrail or thrie beam barrier.

Plans for exempt projects must include a note on appropriate plan sheets that states: "EXEMPT PROJECT WITH LIMITED EXCAVATION, UTILITIES ARE NOT SHOWN."

Exempt Utilities

The following utilities are exempt from these policies and do not need to be plotted on the plans unless the depiction of the utility is needed for interconnectivity with the proposed work:

1. Natural gas service lines less than 2 inches in pipe diameter that have normal operating pressures of 60 psig or less
2. Subsurface electrical service connections with a potential to ground of 300 volts or less
3. Service connections (laterals) for water, sewer, telephone, telecommunication, and cable service

Projects for Which Positive Location is Not Required

The basis for waiving the requirement to include positive location information for high priority utilities on the plans is that the scope of work is flexible and that any conflicts identified during the construction utility location activities can be resolved by adjusting the location of the proposed work. Utility location activities must be performed during construction by the utility owner and marked-out as required by *California Government Code*, Section 4216 et seq.

Utility verification is required for plan development for these projects, but with an approved utility policy exception (including nonstandard special provisions), positive location information of high priority utilities is not required to be shown on the plans (although approximate location is still required) for these stand-alone projects that individually include:

- Electrical conduit placed for street lighting, traffic signal connections, and similar projects
- Highway planting projects where the excavation locations are flexible and are made for plants, irrigation lines, controllers, or other appurtenances only (this exemption does not apply to hardscape, which includes planter boxes, retaining walls, or other infrastructure)

Utility Locating for Construction Area Signs

If exact sign locations are not shown on the project plans, post holes must be dug by hand, except where potential conflicts can be eliminated. Potential conflicts are considered as eliminated when an appropriate regional notification center has performed field mark-outs and no subsurface utilities are within 4 feet of the proposed post hole or the post hole can be moved 4 feet away from subsurface utilities as located by the utility owner.

ARTICLE 3 Locating Requirements

Overview

The project engineer must practice due diligence to collect and depict all utility information at a quality level that allows the proposed work to be assessed for potential conflicts with both existing and proposed facilities. Existing utility location data is collected for use in:

- verifying ownership.
- determining conflicts.
- developing relocation plans.
- developing contract plans.

The American Society of Civil Engineers (ASCE) publishes ASCE Standard CI/ASCE 38-02, *Standard Guideline for the Collection and Depiction of Existing Subsurface Utility Data*. This publication presents a series of options and information relating to utility locating and plan development but does not dictate a specific course of action. ASCE Standard CI/ASCE 38-02 is a valuable guideline to common tasks encountered during the practice of subsurface utility engineering. The ASCE Standard CI/ASCE 38-02 quality levels are defined as follows:

> Utility quality level A: Information obtained by the actual exposure (or verification of previously exposed and surveyed utilities) and subsequent measurement of subsurface utilities, usually at a specific point. Minimally intrusive excavation equipment is typically used to minimize the potential for utility damage. Accurate horizontal and vertical locations, as well as other utility attributes, are shown on plan documents. Accuracy is typically set to 0.6 inches vertical and to the horizontal positional accuracy requirements of the project, or any required statute.

Utility quality level B: Information obtained through the application of appropriate surface geophysical methods to infer the existence and approximate horizontal position of subsurface utilities. Quality level B data should be reproducible by surface geophysics at any point of their depiction. The horizontal locations are surveyed to the horizontal positional accuracy requirements of the project, or any required statute, and reduced onto plan documents.

Utility quality level C: Information obtained by surveying and plotting visible above-ground utility feature as and by using professional judgment in correlating this information to quality level D information.

Utility quality level D: Information derived from existing records or oral recollections.

Positive location associated with "utility quality level A" is mandated for depicting high priority utilities on contract plans for construction within the State highway right-of-way. Approximate location associated with utility quality levels B, C, and D is mandated for depicting all other utilities on contract plans for construction within the State highway right-of-way.

The quality levels must not be shown on the plans, only the test hole or location data in table format with a leader line callout. Quality levels (A, B, C, and D) should be noted in the utility matrix during the project delivery process as utility information is collected and verified.

Positive location or other utility locating measures should occur during the early phases of project development. Location determinations for utilities must be performed at intervals sufficient to establish the location of the line. The horizontal spacing of location determinations must not exceed 100 feet for longitudinal and transverse utilities, except:

- When a longitudinal utility crosses an obstruction, such as a water body or large roadway fill, the location determinations must be at each edge of the obstruction.
- When a transverse utility crosses a highway, the location determinations must be at each outside edge of the highway roadbed and also within the median for a divided highway. The spacing of location determinations outside the highway roadbed must not exceed 100 feet.

Methods of Locating

The project engineer is responsible for determining the method to locate and identify each utility and to document the location. On Caltrans administered projects, the project engineer must obtain direction from the Caltrans district utility coordinator. When a district utility engineering workgroup has been established, the utility engineering workgroup must be consulted.

Test Hole

The preferred method of positive location to specifically identify and accurately determine the horizontal and vertical location of a utility is by excavating a test hole to expose the utility.

Electronic Detection

It is acceptable to use electronic detection for determining the horizontal and vertical location of a utility when used in conjunction with test holes. Test holes ensure proper utility identification and verify the accuracy of electronic readings. Electronic detection is particularly effective for determining that the utility is outside the area of excavation or well below a prescribed depth.

On Caltrans administered projects, the project engineer must determine the locations and number of supplemental test holes, locating requirements, or both after obtaining direction from the Caltrans district utility coordinator. When a district utility engineering workgroup has been established, the utility engineering workgroup must be consulted.

As-Built Plans

The utility owner is required to provide the project engineer with initial as-built plans that show the approximate location of all their utilities within the project limits. Within Caltrans, a request must be initiated by the project engineer to the utility coordinator for all contact with utility owners.

As-built plans for utilities may comply with the requirements for positive location if a utility owner signs and certifies the accuracy of the plan. If this is not available, the project engineer must verify the information with test holes or other methods at critical locations.

New Technologies

The project engineer may authorize or employ other methods to provide the location of subsurface utilities if they produce the required accuracy and are acceptable to the utility owner.

Request to Owners for Utility Locating

This procedure applies to projects designed by Caltrans. Caltrans issues a notice to owner (NTO) to direct the utility owner to locate their utilities by test holes, electronic detection, or other acceptable method. The project engineer must initiate a notice to owner request through the Caltrans district utility coordinator. The procedures for issuance of a notice to owner are detailed more fully in Chapter 13 of the *Right of Way Manual*.

Service Contract for Utility Locating

This procedure applies to projects developed by Caltrans. The Caltrans district utility coordinator may administer a service contract used to perform utility location services associated with project delivery.

Surveying

The district's survey unit or a California licensed land surveyor must record the horizontal location data and also the elevation of high priority utilities that are within the project limits on the Caltrans' survey datum.

ARTICLE 4 Clearance and Offset Requirements

Once the determination has been made that a utility can be accommodated within the State right-of-way, the utility must meet Caltrans' clearance and offset requirements, be protected in place, or be relocated. If a utility is relocated within the right-of-way, the utility must meet the requirements for new installations. Projects must have an approved utility policy exception for utilities that do not meet the requirements in this article. During development of projects, various constraints may require deviation from these policies in the form of a utility policy exception. See Section 3 "Exception Requests," for a summary of the steps to request a utility policy exception.

New and Relocated Subsurface Utility Installation Standards

The installation of utilities within existing or ultimate State highway rights-of-way must meet the following minimum clearances along the alignment of the facility:

1. 42 inches below the finished grade or 18 inches below the grading plane of a currently planned project, whichever distance is greater
2. 12 inches below existing or future drainage structures, but not less than the requirements identified in item 1 above
3. 30 inches below the flow line of unlined ditches
4. 24 inches horizontally from the outside of piles
5. 24 inches horizontally from the side of the planned excavation
6. 36 inches below concrete sidewalks, where future widening of the street in the sidewalk area is not anticipated

Within streets or frontage roads that will be turned over to a local agency, new installations may be installed at lesser depths if allowed by the California Public Utilities Commission General Orders or other regulatory sources.

Existing Subsurface Utilities

Existing utilities within the project limits must meet the following minimum clearances, be protected in place, or be relocated in accordance with this chapter:

1. 18 inches below the grading plane
2. 12 inches below disturbed ground
3. 12 inches below the grading plane of drainage structures
4. 18 inches below the flow line of proposed unlined ditches
5. 24 inches horizontally from the outside of proposed piles and foundations, or the side of planned excavations

It is the utility owner's responsibility to provide appropriate input for the protection of existing utilities during construction.

Utility Clearance Standards

The minimum vertical and radial clearances for utilities over highways are defined in California Public Utilities Commission *General Order 95*. Limited excerpts of the requirements are presented in the *Encroachment Permits Manual* Appendix F.

Additional information about clearances to above ground fixed objects is located in *Highway Design Manual* Topic 309.

ARTICLE 5 Alternatives to Relocation

During development of projects, various constraints may require deviation from these policies in the form of a utility policy exception. See Section 3 "Exception Requests," for a summary of the steps to request a utility policy exception.

Protecting During Construction

The project engineer may give the utility owner the option to protect rather than relocate a utility if a utility policy exception is approved to do so. The special provisions in the contract documents must provide for the necessary coordination between the owner and the contractor. The owner must protect the utility prior to, or concurrent with work. The strategy must be completely detailed in the contract documents as to exact approved method of protection, contact information, required notice(s), and any other information necessary to ensure no liability for costs and delays are incurred.

Rearranging During Construction

When utilities can be rearranged during construction, the special provisions in the contract documents must provide for the necessary coordination between the owner and the contractor.

ARTICLE 6 Certify Policy Compliance

The project engineer must certify that both the determination and the presentation of the utilities shown on the project plans conform to policy.

For projects administered by Caltrans, the utility policy certification is a mandatory attachment to the plans, specifications, and estimates (PS&E) submittal and must be signed by a California registered civil engineer.

For projects administered by others, the utility policy certification must be signed by a California registered civil engineer and submitted to both the Caltrans oversight engineer and the Caltrans district utility coordinator.

Utility Policy Certification

All high priority utilities are listed on the utility policy certification in table format. The plan sheet number, owner, utility (type, size, pressure/voltage), location, and notes about any nonstandard features or clearances are required. Other utilities must be listed when nonstandard features or clearances are known. Deviations from the Caltrans encroachment and/or utility policies must be reviewed and approved, and a copy of the approved exception must be attached to the utility policy certification. See Appendix LL – Utility Policy Certification and Utility Matrix for the template.

ARTICLE 7 Installations by Encroachment Permit

The encroachment permit process for installation of new utilities is documented in the *Encroachment Permits Manual* and includes the following:

- The owner must submit plans (paper copy with electronic vector files) to the district permit engineer that show the location and construction details of the proposed utility and work.
- The district permit engineer determines which functional units must review the proposed plan.
- The utility owner must provide the actual utility location data (accurate as-built plans) to the district permit engineer prior to the close of the permit. The location data must be submitted as an electronic file (DGN file format or other Caltrans accepted vector file format) tied to points that are compatible with the State's datum for the area.

The installation of new utilities or relocation of utilities within the project limits requires the following:

- An encroachment permit
- Compliance with installation standards for new utilities including the incorporation of tracer wire or other continuous measure to provide positive subsurface detection for the life of the facility
- Delivery of location data (as-built plan paper copy with electronic vector files) compatible with the State's datum

The district permit engineer is responsible for enforcing the terms and conditions in this article.

ARTICLE 8 Retention of Records

The location of existing, relocated, or new utility installations under permit must be recorded. This utility information must be included in the Caltrans utility database maintained by each district. The type of records needed will be at the discretion of the district or the district utility engineering workgroup. The district must determine the procedure for records maintenance and ensure it provides for ready retrieval and permanent retention.

SECTION 3 Exception Requests

Overview

On February 22, 1988, Executive Order No. 85-11 established the Caltrans Encroachment Committee to review and approve encroachment exceptions. All authorities and responsibilities of the Caltrans Encroachment Committee were transferred to the Chief, Headquarters Division of Design, who delegated it to the Chief, Office of Project Support. The Caltrans Encroachment Committee is now known as the Encroachment Advisory Group. This multi-disciplinary group evaluates requests for encroachment exceptions. The Chief, Headquarters Division of Design, reserves the authority to make the final determination.

The Headquarters Division of Design has delegated authority for approval of certain design decisions to the District Directors. The *design delegation agreements* define further delegations within each district and the delegated authority for each of the specific approval responsibilities. The approval responsibilities for some of the policies in this chapter have been delegated to some of the districts.

All encroachment and utility policy exceptions must be approved through the exception process. Approval of exceptions for responsibilities that have not been delegated to the districts will be made by the Chief, Office of Project Support. Approval of exceptions for responsibilities that have been delegated to the districts will be made by the appropriate district representative as outlined in the district's design delegation agreement.

Request for an Encroachment Policy Exception

The applicant must justify the need and character of the encroachment policy exception, as such:

- The evaluation of alternative placement outside the State right-of-way was made and found not viable.
- The encroachment must not adversely affect the safety design, construction, traffic operations, maintenance, or stability of the highway.
- The encroachment must not interfere with or impair the present use or future expansion of the highway.
- The applicant must estimate the cost of implementing alternative alignments or locations to show that alternatives are not viable.
- Disapproval of the use of the right-of-way should not result in loss of productive agricultural land or loss of productivity of agricultural land. In this case, the applicant must provide information on the direct and indirect environmental and economic effects of such loss.
- The facility must be located in such a manner that it can be serviced, maintained, and operated without being accessed from through-traffic roadways or ramps. Special cases may occur where the means of access are unavailable or impractical due to terrain or environmental constraints.

The Caltrans district permit engineer is responsible for processing all encroachment permit applications. When applicants propose nonstandard encroachments or nonstandard encroachment features, a formal request for an encroachment policy exception must be submitted for additional evaluation.

Encroachment Policy Exception Request Submittal

The submittal package for an encroachment policy exception request must include a transmittal memorandum that describes the proposed encroachment and encroachment policy exception, includes justification for the policy exception and a recommendation for the proposal from the district permit engineer, and is signed by the Deputy District Directors responsible for design, right-of-way, maintenance, and operations. The submittal must include the following:

1. Detailed map (title sheet) showing the general alignment of the highway, crossroads, frontage roads, ramps, and major geographic features
2. Detailed plans (typical cross sections, layouts, profiles, and construction details) showing the limits of the highway right-of-way, the highway and highway features, including drainage systems, fencing, access gates, limits of

slopes, maintenance access points, environmental constraints, or other factors that may affect the scope of work

3. Copies of any easement, joint use agreement, or consent to common use agreement for existing facilities with prior and superior rights (if any) held by the utility owner
4. Discussion of the future maintenance of utilities, including:
   - alternatives that have been considered for accessing facilities and reasons they are not viable (explain why facilities cannot be accessed from outside the State right-of-way)
   - responsible party for the facility maintenance
   - anticipated frequency of facility maintenance
   - any other necessary requirements due to the methodology, special equipment, or traffic handling plan
5. Discussion of the benefit to the State if the exception request is granted and the consequence if the exception request is denied
6. Concurrence from Headquarters Division of Maintenance-Structure Maintenance and Investigations when structures are involved

The submittal must be addressed to the Chief, Headquarters Division of Design, Attention: Office of Project Support or the appropriate district delegate. The Chief, Headquarters Division of Design or district delegate, will approve or deny, in writing, each submittal presented for consideration.

Request for a Utility Policy Exception

The project engineer must execute due diligence in investigating potential conflicts between the proposed construction and the existing utilities, justifying non-compliance to the utility policies.

As-built plans and permit records must be searched and evaluated for potential utility conflicts.

Should potential conflicts become apparent and the work elements are flexible as to placements, mitigation alternatives associated with these flexible installations can be considered through an exception request.

Utility Policy Exception Request Submittal

The submittal package for a utility policy exception request must include a transmittal memorandum that describes the proposed utility and utility policy exception, includes justification for the policy exception and a recommendation for the proposal, and is signed by the Deputy District Director for design. The submittal must include the following:

1. Detailed map (title sheet) showing the general alignment of the highway, crossroads, frontage roads, ramps, and major geographic features
2. Detailed plans (typical cross sections, layouts, profiles, and construction details) showing the limits of the highway right-of-way, the highway and highway features, including environmental constraints or other factors necessary
3. Proposed access to utilities, if appropriate
4. Concurrence from Headquarters Division of Maintenance-Structure Maintenance and Investigations when structures are involved

The submittal must be addressed to the Chief, Headquarters Division of Design, Attention: Office of Project Support or appropriate district delegate. The Chief, Headquarters Division of Design or district delegate, will approve or deny, in writing, each submittal presented for consideration.

CHAPTER 18 – Environmental Contamination

Table of Contents

CHAPTER 18 – Environmental Contamination 18-3
ARTICLE 1 General..... 18-3
Introduction..... 18-3
Definitions 18-3
ARTICLE 2 Applicable Laws, Regulations, and Regulatory Agencies 18-5
Federal 18-5
State 18-7
State Laws..... 18-7
State Regulations 18-7
Local 18-9
ARTICLE 3 Policies 18-9
Compliance with Applicable Laws and Regulations..... 18-9
Early Identification of Contamination 18-10
Avoidance of Contaminated Properties 18-10
Exception Policy for Acquisition of Contaminated Properties..... 18-11
Area of Contamination Policy 18-12
Management of Soil Containing Aerially Deposited Lead..... 18-12
Management of Soil Containing Naturally Occurring Asbestos 18-13
Remediation of Contaminated Properties Prior to Construction 18-14
Exception Policy for Remediation During Project Construction 18-14
Policy for Special Funded and Jointly Funded Projects 18-14
Disposal of Hazardous Waste Within California..... 18-15
ARTICLE 4 Procedures 18-15
Addressing Contamination During the Project Development Process 18-15
Project Initiation Phase 18-16
Initial Site Assessment - Project Screening and Evaluation..... 18-17
Project Approval and Environmental Document Phase 18-18
Site Investigation 18-18
Project Report and Alternative Evaluations 18-19
Plans, Specifications, and Estimate Phase..... 18-20
Hazardous Waste Management Plan 18-25
Hazardous Waste Management Plan Decision Meeting..... 18-25
Remedial Action Plan 18-25
Regulatory Agency and Public Involvement..... 18-25

Remediation - Hazardous Waste Plans, Specifications, and Estimate 18-26
Exception Request to Remediate Contamination During Construction ... 18-26
Recovery Actions from Responsible Parties 18-27
Management of Contaminated Soil Not Requiring Remediation..... 18-27

Table of Figures

Figure 18-1 Hazardous Waste Sites for Risk Analysis..... 18-32
Figure 18-2 Hazardous Waste Investigation Activities 18-33
Figure 18-3 Hazardous Waste Assessment Request Form 18-35
Figure 18-4 Initial Site Assessment (ISA) Checklist..... 18-37

CHAPTER 18 – Environmental Contamination

ARTICLE 1 General

Introduction

Contamination must be considered in the project development process because it can impact project alignment, increase project cost, extend the project schedule, and adversely impact worker health and safety. If not properly addressed through planning, contamination can cause budgetary overruns and schedule delays, and endanger lives. The presence of contamination can affect which alternatives or alignments are considered viable to study. Department policy specifies that contaminated properties not be purchased for transportation projects (see Policy section). Project costs increase when contamination is present because proper remediation and management of the contamination must be added to the project in order for it to proceed. Contamination adds time to the schedule simply because of the time required for remediation and/or regulatory over sight. If contamination is present worker health and safety must be considered and measures to eliminate potential harmful worker exposures must be planned for and included in the project.

Definitions

Contamination is defined in both the Water Code, Division 7 Water Quality Section 13050(k), and the Health & Safety Code, Division 5 Sanitation Section 5410(d), as an impairment of the quality of the waters of the state by waste to a degree which creates a hazard to the public health through poisoning or through the spread of disease. Contamination includes any equivalent effect resulting from the disposal of waste, whether or not waters of the state are affected. This expands the definition so that for example contamination can be found in soil or a waste, not just waters of the state. Hazardous waste if found in soil is considered a form of contamination. For the purpose of this manual contamination is used to indicate any impurity or substance in soil, water, or air that could have a deleterious effect on human health or the environment.

Hazardous Waste has complex State and federal legal definitions. In general a solid waste is defined as a hazardous waste when it exhibits a hazardous waste characteristic (toxicity, ignitability, reactivity, and/or corrosivity) or when it has been specifically listed as hazardous in federal or State law or regulation. Hazardous waste is regulated by the U.S. Environmental Protection Agency (US EPA) under the Resource Conservation and Recovery Act (RCRA). Federal hazardous wastes are often referred to as RCRA wastes. California hazardous waste law and regulation is in some cases more stringent than the federal and as a result, wastes may be defined as California hazardous wastes but not be RCRA wastes.

Hazardous Material is a related term that includes hazardous waste and is defined as any material that, because of its quantity, concentration, or physical or chemical characteristics, poses a significant present or potential hazard to human health and safety or to the environment if released into the workplace or the environment. "Hazardous materials" include, but are not limited to, hazardous substances, hazardous waste, and any material which a handler or the administering agency has a reasonable basis for believing that it would be injurious to the health and safety of persons or harmful to the environment if released into the workplace or the environment.

Hazardous Substance refers to a) Any substance or mixture of substances that (1) is toxic, (2) is corrosive, (3) is an irritant, (4) is a strong sensitizer, (5) is flammable or combustible, or (6) generates pressure through decomposition, heat, or other means; if the substance or mixture of substances may cause substantial personal injury or substantial illness during or as a proximate result of any customary or reasonably foreseeable handling or use, including reasonably foreseeable ingestion by children. It also includes certain radioactive substances and certain substances that present an electrical, mechanical, or thermal hazard.

"**Designated Waste**" means either of the following: (a) Hazardous waste that has been granted a variance from hazardous waste management requirements pursuant to Section 25143 of the Health and Safety Code (such as aerially deposited lead) or (b) Nonhazardous waste that consists of, or contains, pollutants that, under ambient environmental conditions at a waste management unit, could be released in concentrations exceeding applicable water quality objectives or that could reasonably be expected to affect beneficial uses of the waters of the state as contained in the appropriate state water quality control plan. The term, designated waste, is used by

the State Water Resources Control Board and by the Regional Water Quality Control Boards.

A **Responsible Party** is an entity that either caused contamination on a property or has acquired legal liability for the contamination through property ownership or by spreading the contamination.

Remediation is a term used to mean the cleanup of contamination.

ARTICLE 2 Applicable Laws, Regulations, and Regulatory Agencies

Federal

The US EPA regulates federal hazardous waste and oversees the remediation of contaminated sites that have been listed on the National Priority List (NPL). These sites are commonly referred to as Superfund Sites. The two most important federal laws that address environmental contamination and the management of hazardous waste are known as CERCLA and RCRA. US EPA has the authority to protect the general public from exposure to airborne contaminants through the Clean Air Act (CAA).

CERCLA: The Comprehensive Environmental Response, Compensation, and Liability Act (CERCLA), commonly known as Superfund, was enacted by Congress on December 11, 1980. This law created a tax on the chemical and petroleum industries and provided broad Federal authority to respond directly to releases or threatened releases of hazardous substances that may endanger public health or the environment. CERCLA:

- established prohibitions and requirements concerning closed and abandoned hazardous waste sites;
- provided for liability of persons responsible for releases of hazardous waste at these sites; and
- established a trust fund to provide for cleanup when no responsible party could be identified.

Liability is of particular concern to the Department because, under CERCLA, a current or former property owner can be found responsible for remediation even if they did not contaminate the property. The cost of remediation can make it

impossible for a transportation project to proceed and the liability itself can make the Department vulnerable to future claims by adjacent property owners and others who had access to the property. This is a huge incentive to avoid contaminated property in the planning and design of a project and one of the primary reasons for the Department's policy to do so.

RCRA: The Resource Conservation and Recovery Act (RCRA) gave EPA the authority to control hazardous waste from the "cradle-to-grave." This includes the generation, transportation, treatment, storage, and disposal of hazardous waste. RCRA also set forth a framework for the management of non-hazardous wastes. RCRA focuses only on active and future facilities and does not address abandoned or historical sites. A RCRA waste is a waste that is defined as a hazardous waste under Federal Law. The State of California has RCRA authorization which means that the authority and responsibility for the enforcement of RCRA has been delegated to the State, specifically the Department of Toxic Substances Control.

The up-front and long-term costs associated with the generation of RCRA wastes must be considered when planning transportation projects. At the time of a project there are special management, transportation, and disposal costs and fees to consider. RCRA waste generation can also create significant future liability for the Department. RCRA stipulates that the generator of hazardous waste is responsible for that waste even after proper disposal in an appropriately permitted landfill. If the landfill operator goes bankrupt, the original waste generators must take responsibility for the long-term maintenance of the landfill. This is a huge incentive to minimize hazardous waste generation on projects and to avoid contaminated properties because remediation of contaminated properties usually also results in hazardous waste generation.

CAA: The Clean Air Act required US EPA to develop and enforce regulations to protect the general public from exposure to airborne contaminants that are known to be hazardous to human health. In response, US EPA established National Emissions Standards for Hazardous Air Pollutants (NESHAP) to protect the public. Asbestos was one of the first hazardous air pollutants regulated. The asbestos NESHAP regulations protect the public by minimizing the release of asbestos fibers during activities involving the processing, handling, and disposal of asbestos-containing material. This is important because asbestos can be found in building products that may be encountered during structure demolition or retrofit and because naturally occurring asbestos (NOA) exists in many areas of California.

State

The California Environmental Protection Agency includes several departments and boards that have regulatory oversight of contamination and waste issues and. These are the Department of Toxic Substances Control, the State Water Resources Control Board, the Regional Water Quality Control Boards, the Air Resources Board, and the Integrated Waste Management Board. Cal-OSHA oversees health and safety at contaminated sites. A brief introduction to the laws and regulations enforced by these boards and departments follows.

State Laws

Health & Safety Code

- Division 20, Chapters 6.5 through 6.98 provides authority for DTSC and includes laws regarding hazardous waste management and State Superfund. These laws create a framework similar to federal CERCLA and RCRA.
- Division 26 provides authority for the CARB. The CARB is designated as the air pollution control agency for all purposes set forth in federal law. The CARB is designated as the State agency responsible for meeting the requirements of the Clean Air Act.
- Water Code, Division 7, Water Quality (Porter Cologne Water Quality Control Act) provides authority for the State Water Resources Control Board and the Regional Water Quality Control Boards and makes them the principal State agencies with primary responsibility for the coordination and control of water quality. This includes both surface water and ground water.

State Regulations

- Title 8 - Industrial Relations, Division 1 - Department of Industrial Relations, Chapter 3.2 California Occupational Safety and Health (OSHA) Regulations. Title 8 includes requirements as put forth by the California Office of Health and Safety (Cal OSHA) for worker and public protection in general and during construction related activities. Regulations include exposure limits and protective clothing required to prevent exposures to hazardous materials. Specific sections cover lead in construction safety standards and asbestos exposure. Accident prevention measures are also included in Title 8.
- Title 17 - Air Resources, Division 3. Title 17, enforced by the California Air Resources Board (CARB), regulates the disturbance and use of material containing naturally occurring asbestos (NOA). Section 93105, “Airborne Toxic Control Measures (ATCM) for Construction, Grading, Quarrying and Surface Mining Operations,” minimizes the emissions of asbestos by requiring the use of dust control practices in areas containing NOA. This regulation

defines construction as any activity that disturbs soil or rock containing asbestos in concentrations of 0.25% or greater.

- Section 93106 of Title 17, "ATCM for Surfacing Applications," reduces asbestos emissions by prohibiting the use of material containing NOA in concentrations greater than 0.25% for surfacing applications, such as unpaved roads, driveways, pathways, decorative uses, and landscaping.
- Title 22 - Social Security, Division 4.5 - Environmental Health Standards (Hazardous Waste Regulations). Title 22, primarily enforced by the Department of Toxic Substances Control, defines hazardous and special waste, identifies State and federal hazardous wastes criteria, and regulates the storage, transportation, and disposal of waste. These regulations were created to regulate the waste generated by factories or similar sources, but soil excavated during construction may also be regulated in accordance with these regulations. If soil with contaminants meets Title 22 waste criteria and will be excavated during construction-the soil must be handled in a manner consistent with these regulations. RCRA wastes meet the federal definition of a hazardous waste. A California only hazardous waste is non-RCRA and only considered hazardous in California. In general management of California non-RCRA hazardous waste is less expensive than RCRA waste but can add considerable costs to a project and does have significant long-term liability. These regulations are also are found in Title 26.
- Title 23 - Waters, Division 3 - State Water Quality Control Board (Underground Storage Tanks). Title 23 contains the authority establishing the State Water Resources Control Board (SWRCB) and Regional Water Quality Control Boards. These regulations govern underground storage tanks (UST's) and placement of waste to land. Transportation projects are affected by these regulations when tanks will be removed as part of right-of-way clearance. If a transportation agency takes control of the tank (removes the tank or buys property with an underground tank) then the agency acquires responsibility for the tank and any associated contamination, whether the agency operated the tank or not. The primary goal of these regulations is to protect ground water. The authority to regulate underground tanks is often delegated to local county environmental health offices.
- Title 26 - Toxics, Compilation of all environmental and waste regulations. Title 26 is a compilation of toxic regulations issued by State regulatory agencies and published for the first time in one Title of the California Administrative Code in August 1986. Please note that these toxic regulations are also found in the original Titles assigned to each agency. Title 26 is organized with the agencies listed in numerical sequence according to their original Title assignments. The regulatory sections within each Division of Title 26 also reflect the original section number assignments and are arranged in numerical sequence. The California Department of Toxic Substance Control (DTSC) hazardous waste management regulations found in Title 22 are also found here. The State Water Resources Control Board and Regional

Water Quality Control Boards land disposal restrictions and underground tank regulations found in Title 23 are also found here.

- Title 27 - Environmental Protection, Division 2: Solid Waste (Compilation of landfill regulations). Title 27 contains a compilation of landfill regulations. These regulations govern the construction of landfills and the restrictions to landfills for what they can accept from dischargers. Wastes are divided into inert (i.e., concrete), household, special wastes, and hazardous wastes. Each of these wastes must be disposed of at specific types of landfills that are constructed to contain the waste. Title 27 explains the differences in the different classes of landfills (Class I, II, and III) and what each class of landfill can accept. Class 1 landfills accept hazardous waste, Class II landfills accept special wastes, and Class III landfills are those which accept household type wastes. For transportation projects, these regulations will determine what class of landfill can accept excavated material from a construction site. These regulations are enforced by the Integrated Waste Management Board, the Regional Water Quality Control Boards, and in the case of landfills accepting hazardous waste, the Department of Toxic Substances Control.

Local

In many jurisdictions, the responsibility and authority to enforce many of the State laws regarding environmental contamination and hazardous waste are delegated to local agencies. Local county or city health departments in certain jurisdictions are responsible for inspecting hazardous waste generators, performing regulatory oversight on tank removals and site closures, responding to complaints of environmental contamination, etc. Local fire departments are often responsible for performing regulatory oversight on tank removals and site closures. The Caltrans district hazardous waste specialists will identify which regulatory entities if any have jurisdiction over a property or activity when initial site assessments (ISAs) are performed for the project.

ARTICLE 3 Policies

Compliance with Applicable Laws and Regulations

It is Caltrans policy to comply with all applicable laws and regulations regarding contamination and hazardous waste. This ensures the protection of workers, the community and the environment, limits liability and potential future costs, and ensures that Caltrans is a good steward of the resources under Caltrans' control.

Early Identification of Contamination

Properties that may be obtained or utilized for a transportation project must be evaluated early in the project development process so that property conditions do not cause project delays. This conforms to Caltrans policy regarding change control, because identifying serious problems early reduces the need for project modifications later in the process. It is the project manager's (PM) responsibility to involve hazardous waste staff in the project development process as early as possible to ensure that contamination identification and remediation is addressed and completed. Every project must be evaluated by district hazardous waste staff to determine whether a full initial site assessment (ISA) must be completed. Every project that includes excavation, structure demolition or modification, or the purchase of new right-of-way will require a full ISA to determine if known or potential contamination (hazardous waste and or hazardous material) is present within the project limits. Lands and buildings projects, utility relocations, gifts of property, and hardship and protection acquisition must consider possible contamination issues. Projects that include minor soil disturbance may involve contact with soils containing aerially deposited lead or naturally occurring asbestos and therefore require specific worker health and safety measures. The more complex and or severe the contamination problems are, the higher the level of risk they present to the project delivery commitment and therefore the earlier the contamination problems must be investigated and evaluated. (See the Procedures Section for a detailed explanation of the contamination investigation activities in the project development process). Timely investigation and evaluation of contamination problems will reduce the likelihood of unexpected project delays and cost increases.

Avoidance of Contaminated Properties

It is Caltrans policy to avoid contaminated properties if possible, to have responsible parties accept responsibility for remediation, and to seek reimbursement from responsible parties when Caltrans must conduct a remediation as part of the project development process. The State should not accept liability for contamination it did not cause nor accept responsibility for the cost of such remediations. It is obvious that this is prudent because it eliminates potentially unnecessary costs to a transportation project. There are additional problems with the purchase of contaminated property that are just as significant but not as obvious:

- Long-term liability – When contaminated property is purchased the Department may become responsible for remediation that can take decades to complete. The Department acquires permanent responsibility for any hazardous waste that is removed from the contaminated property and disposed at a landfill. The Department may also be vulnerable to damage claims by adjacent property owners or individuals who have been exposed to the contaminants at the site.
- Regulatory Interaction – In most cases, the remediation of contaminated property requires oversight by a local, State, or federal regulatory agency that has ultimate responsibility for and control over the manner and timing of remediation activities. As a result, it can be extremely difficult and in some cases impossible to ensure that remediation activities do not cause transportation project delays.

Exception Policy for Acquisition of Contaminated Properties

There are situations where contaminated property must be acquired in order for a project to proceed. In these situations, acquisition of contaminated property may occur only after an adequate site investigation of the property has been conducted and the cost of the remediation has been considered in the appraisal and acquisition process. In these cases every effort must be made to avoid acceptance of legal liability and responsibility for the cost of cleanup. In addition, the approval of the Deputy Director, Project Delivery and the Deputy Director, Planning and Modal Programs is required when any of the following four conditions exist:

1. Remediation costs (excluding investigation costs) relative to the specific parcel are estimated to exceed $200,000 and:
    a) The estimated cost of remediation exceeds 50 percent of a parcel's appraised value compared to its uncontaminated value, <u>or</u>
    b) The estimated cost of parcel remediation exceeds 10 percent of the total project costs (right-of-way and construction).
2. Contamination on the parcel has resulted in groundwater contamination requiring cleanup.
3. The net value of the property after fair market value deduction for hazardous waste cleanup is $0 (or the cost of the cleanup exceeds the fair market value of the property) and the parcel is to be presented to the CTC for approval of a Resolution of Necessity.
4. The parcel was previously a mining and/or milling site with associated tailings, drainage and/or processing residues residing on the parcel or mine site which is subject to local, State and/or federal reclamation requirements.

See the Procedures Section for a detailed description of the requirements of an Exception Request.

Area of Contamination Policy

US EPA allows certain discrete areas of generally dispersed contamination to be considered an individual waste management unit (equivalent to a landfill). These discrete areas are defined as Areas of Contamination or AOCs. An AOC is equated to a single unit, and therefore movement, consolidation, or in-situ treatment of hazardous waste within the AOC does not create a new point of hazardous waste generation. For an AOC, contamination must be contiguous but can have various concentrations. Contaminated materials within an AOC may be handled without the Department of Toxic Substance's Control's authorization for treatment, storage, or disposal of hazardous waste if the handling of the contaminated soil meets the requirements of the AOC policy.

In parts of the State such as San Francisco Bay, Los Angeles Harbor and San Diego Harbor certain areas were filled in to create more land. Historically these areas were filled with solid waste that sometimes contained hazardous waste. It is not possible to trace the responsible parties, nor is it practicable or necessary to remediate these entire areas. Therefore in these types of areas contaminated soil excavated for plantings, or to construct footings, foundations or other underground structures such as culverts, irrigation facilities, and utilities will be stockpiled and then used as backfill. Work done in these types of fill areas can fall under the US EPA AOC policy as long as the requirements of the DTSC AOC implementation plan are met. This plan was negotiated in 2000. See the Procedures Section for a detailed description of Caltrans' soil management in contaminated fill areas.

Management of Soil Containing Aerially Deposited Lead

Aerially Deposited Lead (ADL) is found along the unpaved areas adjacent to many highways. ADL is the result of tailpipe emissions during the years that lead was used as an additive in gasoline. It is Caltrans policy to evaluate and investigate these unpaved areas when they will be impacted by a project, to ensure that workers are properly protected from lead exposure through training and appropriate work practices, and to manage ADL containing soils in compliance with all applicable laws and regulations while minimizing costs to the project and future liability.

In many areas of the State there are ADL concentration levels along the highway, that are high enough to cause the soil to be defined as a California hazardous waste. Hazardous waste law requires that this material, once excavated be managed, transported and disposed at a Class I disposal facility as a hazardous waste. The

associated costs and logistics must be considered when planning transportation projects. Some districts have variances issued by DTSC that allow them to reuse soil containing hazardous waste levels of ADL within projects as long as certain conditions are met and the district has obtained approval from the Regional Water Quality Control Board with jurisdiction. A variance waives certain hazardous waste rules and in the case of the ADL variances, allows the Department to reduce costs and potential liability while still managing these soils in a manner that is protective of public health and the environment. The ADL variances expire periodically and must be renegotiated. Each time the variance is renewed, the variance requirements are updated to comply with changing laws and regulations and to incorporate new scientific information about lead and its impact on health and the environment. Therefore it is always necessary to confer with the district hazardous waste staff to determine how soil should be managed on a specific project and to assist in the preparation of project specific special provisions. See the Article 4 - Procedures for specific recommendations regarding the management of ADL containing soils in construction projects.

Management of Soil Containing Naturally Occurring Asbestos

Naturally Occurring Asbestos (NOA) is a term used for several types of naturally occurring fibrous minerals found in serpentine and other ultramafic rock. Asbestos can be released from the rock when it is broken or crushed. Releases of asbestos can occur when equipment is driven on unpaved roads, on shoulders, or in areas that are surfaced with serpentine or other ultramafic rock. Asbestos is also released naturally through weathering and erosion. Once released from the rock asbestos fibers can become airborne. Asbestos is a known carcinogen.

It is the Headquarters Division of Design's responsibility to ensure that appropriate specifications and special provisions addressing NOA issues are included in all projects that will encounter NOA. Construction activities must be performed in compliance with all federal, State, and local statutes and regulations and employees, contractors and the public must be adequately protected. Additional information regarding the Department's NOA policy can be found in Deputy Directive 71, titled "Management of Naturally Occurring Asbestos (NOA)." Consult with district hazardous waste staff to determine whether NOA may be present within the project limits, to determine if and when NOA testing should be performed, and to assist in the preparation of special provisions to address NOA. See Article 4 – Procedures for

additional information about the management of NOA containing soils in construction projects.

Remediation of Contaminated Properties Prior to Construction

Even with extensive information about a contaminated property, remediation is often fraught with uncertainty. Therefore it is Caltrans policy to remediate project related contamination prior to PS&E submittal for advertising whenever possible, reasonable, and feasible in order to minimize potential construction delays and change orders. This includes remediation by the responsible party whenever possible or by Caltrans when necessary.

Exception Policy for Remediation During Project Construction

In cases where remediation of project related contamination prior to construction is not feasible, an exception must be approved by the Regional or District Director. Examples of such situations include cases where remediation prior to construction cannot be scheduled or cases where remediation prior to construction would require excavation, backfill and then re-excavation of the backfilled soil during construction. See the Procedures Section for a detailed description of the exception requirements.

Policy for Special Funded and Jointly Funded Projects

Responsibility for management and funding of contaminant remediation and disposal activities when contamination is encountered in the Department's right-of-way during special and jointly funded projects depends upon the nature of the contamination. Contamination, referred to as hazardous material, is categorized as HM-1 or HM-2:

- HM-1 is hazardous material (including but not limited to hazardous waste) that requires removal and disposal pursuant to State or federal law, whether disturbed by the project or not.
- HM-2 is hazardous material (including but not limited to hazardous waste) that requires removal and disposal pursuant to State or federal law, only if disturbed by the project.

HM-1 requires active management, without regard to the project, and therefore any costs associated with remediation of HM-1 are not considered project costs and will be the responsibility of the Department. HM-2 requires active management only if disturbed by the project, and therefore any costs arising from management of HM-2 will be considered project costs. For any 100 percent locally funded project, any

management costs associated with such HM-2 will be the sole responsibility of the project sponsor. For any jointly funded project, any management costs associated with such HM-2 will be shared in the same proportion as other project costs.

All cooperative agreements for special funded and jointly funded projects must include clauses relating to hazardous material that reflect this policy.

Disposal of Hazardous Waste Within California

Hazardous waste disposal laws vary from state to state. Since it is Caltrans policy to comply with all applicable laws and regulations, State law should not be circumvented by sending hazardous waste to another state that may have less strict requirements. In addition, the Western Governors' Association "Regional Waste Management Protocol" which the Governor of California was a signatory, states, "We will do everything economically and environmentally practical to ensure that wastes generated in our states are treated and disposed of in our own state before resorting to export." Therefore, it is Caltrans policy to dispose of hazardous waste, generated during remediation or construction projects, within California unless there are extenuating circumstances. A situation where a facility, permitted to accept a specific waste, cannot be found within California is an example of an extenuating circumstance. The requirement to dispose hazardous waste within California should be addressed in the special provisions for the project. District hazardous waste staff can be consulted for information about the disposal of specific types of hazardous waste.

ARTICLE 4 Procedures

Addressing Contamination During the Project Development Process

The presence of hazardous waste can present varying degrees of risk to the delivery of a transportation project. Level of risk has been divided into three categories; high, medium, and low. High risk indicates that a contaminated site exists that could be considered a fatal flaw for the project alternative on which the site lies. It may not be possible to adequately estimate remediation costs or schedule because of the physical and regulatory complexity of the conditions at the site. High-risk sites, such as landfills and junkyards, represent conditions that could be cost prohibitive to investigate and situations where regulatory concurrence on mitigation and cleanup

could be impossible to get within the time frame of the transportation project. These may also be sites that require long term monitoring and liability, which must be considered when evaluating project costs. Medium risk indicates a type of contaminated site that the Department has significant experience with and remediation cost and schedule can be estimated with an acceptable degree of certainty. Examples of medium risk sites are pre-1980 gas stations, industrial properties (active for less than 20 years and with good management practices), and properties with naturally occurring asbestos. These sites have conditions that will require one-time cleanup activities, design modification or special management but will not be cost prohibitive to the project and can be addressed within a predictable schedule. Low risk issues/sites will not significantly impact the design, cost, scope or schedule of a transportation project. An example of a low risk issue is the presence of asbestos and lead paint in structures. These are conditions that will require special provisions for health and safety during construction, but will not need advance cleanup or design changes. A list of example sites for each level of risk category is in Figure 18-1. The figure is used only as a guide because the cost of investigation and remediation of a site in comparison to the construction costs of the project must also be considered when categorizing sites. As a general rule high-risk sites are expected to cost at least 20 percent of the Construction costs to investigate and remediate (clean up). Medium risk sites are expected to cost between 10 percent and 20 percent of the construction costs to investigate and remediate. Low risk sites are expected to cost less than 10 percent of the construction costs to investigate and remediate.

The timing of hazardous waste investigation activities depends upon the risk a site poses to the project. In general, the higher the risk, the earlier it should be evaluated. Figure 18-1 indicates what activities must be taken during the PID, PA&ED, and PS&E phases of a project based upon the risk level of the site. The following sections explain the process in more detail.

Project Initiation Phase

It is recommended that district hazardous waste staff participate in the project kickoff meeting of every project so they can make initial recommendations about the type and timing of hazardous waste studies based upon the location and type of project. As stated in the Policy section, every project must be evaluated to determine whether a full ISA needs to be completed and every project that includes excavation, structure demolition or modification, or the purchase of new right-of-way will definitely require a full ISA to determine if known or potential hazardous waste is present

within the project limits. Lands and buildings projects, utility relocations, gifts of property, and hardship and protection acquisition must consider possible hazardous waste/material issues. Projects with the potential for high-risk contamination issues may require a preliminary site investigation at this early stage of the project.

Hazardous waste/material issues, or potential issues, must be discussed in the project initiation document (PID), along with a recommended action for avoiding or mitigating the contamination site. The hazardous waste coordinator will provide an ISA memorandum summarizing potential hazardous waste sites, the level of risk associated with each site, and cost, schedule, and resource estimates will be included in the PID. When a PEAR is required, the ISA process will be incorporated into the PEAR process.

Initial Site Assessment - Project Screening and Evaluation

In an effort to provide accurate information early in the project development process, the design unit responsible for the engineering document shall submit the Hazardous Waste Assessment Request Form (HWARF), or equivalent to the district hazardous waste coordinator's office for all Minor projects prior to the design phase. The Assessment Request Form may be updated and resubmitted to the hazardous waste coordinator as additional information is available and changes to the scope of the project is made.

The hazardous waste coordinator will use the HWARF to conduct an ISA and, if necessary, site investigations for the project. Certain types of projects may not require detailed study. These are usually projects that do not involve any soil disturbance or removal of hazardous materials. Examples are pavement reconstruction, resurfacing, and placement of seal coat or repair and maintenance of the highway and appurtenant facilities.

ISA's are the responsibility of district hazardous waste staff. An ISA generally includes a visual examination of the property, a regulatory records review, interviews of property owners and property users and employees when appropriate, and historical research when necessary. The ISA Checklist (see Figure 18-4) is a guide for the work, but does not take the place of an ISA report/memorandum. ASTM standards 1527 and 1528 can also be used as guides and references, especially for ISA's conducted on parcels to be acquired by the State (a historic land use report by a Historian with a Master's degree is also recommended for ISA's for parcel acquisition).

The ISA report/ memorandum provided by the hazardous waste staff will include a risk analysis of potential hazardous waste sites within the project limits and cost, schedule, and resource estimates based on existing information. A flow chart, table of risk analysis, and instructions for completing the HWARF to conduct the hazardous waste risk assessment are included as Figure 18-2, Figure 18-1, and Figure 18-3.

Some projects may require a one line ISA consisting of language referring to the requirement of a site investigation during either the PA&ED, or PS&E phase. Types of projects that may require a site investigation without a formal ISA include landscaping planting on Caltrans right-of-way, sign and guardrail installation, traffic signal/CCTV installation, and structure modification/demolition. In these cases the concerns are issues such as aerially deposited lead and asbestos, which can be identified without a full ISA.

Project Approval and Environmental Document Phase

The environmental document shall include complete site characterization information for high and medium risk sites. Therefore site investigations of these sites must be performed and completed well in advance of the preparation of the environmental document. If potential hazardous waste/material problems are identified in the ISA, the Environmental staff including the hazardous waste staff shall meet with the project manager and members of the Project Development Team to discuss alternatives, including avoidance. If avoidance is not prudent, justified, or guaranteed at this stage of the project development process, then site investigation(s) will be conducted. Site investigation is often conducted during PA&ED, however the timing of site investigations will be based upon the risk level of the site(s). For details of this timing please see Figure 18-2. In the case of medium risk sites the site investigation will be conducted during the PA&ED phase of the project. However, at high-risk sites preliminary site investigations should be conducted during the PID Phase with additional site investigation during PA&ED as needed. Site investigations of low risk sites may be delayed until PS&E if the site or issue is well understood and will not impact project cost, scope, and schedule.

Site Investigation

Site investigations are performed for Caltrans by on-call consultants at the direction of the district hazardous waste staff and with approval of the project manager. Site investigations are first conducted to determine whether contamination is present. If

contamination is detected a detailed site investigation may be conducted to determine the full nature and extent of contamination so that remediation costs can be estimated.

The higher risk a property is, the earlier site investigation work should be approved and conducted. This will better direct the project as alternatives are considered. Subsurface information may be required during the project initiation phase for any high-risk sites within the project limits. This information may be obtained from prior studies or from a Caltrans initiated investigation. Based upon the information collected, a memorandum will be prepared by the hazardous waste staff that explains the subsurface conditions and includes mitigation options, an estimate for cleanup costs and duration, a resource estimate for additional investigations, and a recommendation on the viability of any project alternatives that include the high-risk site(s).

More detailed subsurface information is obtained during the Project Approval and Environmental Document (PA&ED) phase for both high-risk sites on remaining alternatives, and medium risk sites. Information derived from detailed investigations will include the consultants recommended mitigation options, cost estimates, and an estimate of the schedule and duration for remediation. This information will be included in the environmental document. Site investigation memorandum s (PA&ED Phase) will include the consultant's recommended mitigation options, cost estimates, and estimated clean up schedule.

When a site investigation has identified contamination at an actionable level, the property owner and appropriate regulatory agencies will be notified of the results in accordance with regulatory requirements. The PE (through R/W and with the assistance of the hazardous waste staff) requests the appropriate regulatory agency to notify the owner and any other potentially responsible parties of their obligation under the law for mitigation of the contamination. Thorough site investigation records should be maintained separately for potential use in cost recovery actions.

Project Report and Alternative Evaluations

Following completion of the site investigation and environmental studies, the environmental unit presents the results to the PM and the PDT. If contamination problems have been confirmed, alternatives to avoid the contaminated properties must be identified and evaluated. The problems and avoidance alternatives must be discussed in the project report and environmental document. The reports, as

appropriate, must include a discussion of any anticipated site remediation including a cost and schedule estimate.

It is Caltrans' policy to avoid contamination, however it is also Caltrans' policy to select the alternative with the least environmental impact and the most cost-effective solution that best meets the project purpose-and-need. This makes it impossible to avoid contamination in all cases. After the project decision has been made, if the selected alternative contains a known hazardous waste site, the PM has primary responsibility to ensure that the hazardous waste problem is appropriately addressed. Design changes or variations in the selected alternative shall be considered to avoid the site. If avoidance is not prudent, additional studies must be conducted to investigate ways to minimize hazardous waste impacts.

Plans, Specifications, and Estimate Phase

Remediation Plans and Approach

After the project decision, the PM arranges a Project Decision Hazardous Waste Meeting with the PDT and appropriate Caltrans functional units (including legal) to discuss the extent of the contamination problem and formulate a plan of action. The FHWA should be involved (as appropriate). The environmental unit will determine if the appropriate regulatory agency has notified the owner and/or other potentially responsible parties of a required cleanup. If not, such notification will be sought. The right-of-way unit will contact the owner of the property to determine whether the owner is able to and intends to investigate and remediate the site such that the project schedule can be met. A hazardous waste strategy meeting with the PDT must be held to evaluate the magnitude of the contamination problem. The meeting should discuss the following possible scenarios:

Case 1 - If the property owner has agreed to accept responsibility for the remediation, and after investigation, decides to accept responsibility for both the execution and expense of the cleanup, then Caltrans will develop a plan of action that incorporates the owner's intent and that specifies a program schedule that Caltrans expects to be followed. It is also possible in Case 1 for the owner to have investigated the contamination and evaluated remediation options and decided to have Caltrans clean up the problem. If this were to occur, Caltrans would evaluate the owner's investigation and then proceed with remediation as in Case 2. The remediation costs, as well as any additional investigative work required for the remediation, would be deducted from the appraised property value. Case 2 - If the property owner cannot or

will not investigate and remediate the site, Caltrans would continue investigating the contamination problem, and would proceed to hold a meeting to discuss remedies for the problem. At this meeting it will be necessary to determine whether time allows for adequate contamination investigation and remediation prior to construction of the transportation facility or whether it will be necessary to remediate during construction. The Headquarters Division of Legal will be requested to seek cost reimbursement from the owner and/or responsible parties.

Case 1 - Remediation by Owner and/or Responsible Party

When the owner and/or responsible party has accepted remediation responsibility, it is Caltrans' responsibility to monitor their investigation and remediation progress and to make appropriate schedule changes. It will be necessary to negotiate with the property owner to ensure that the remediation will be completed prior to property transfer and prior to project construction. In many cases the remediation performed by the property owner will leave some contamination in place that may be encountered during construction of the transportation project. In these cases, Caltrans must prepare a right-of-way report showing estimated cleanup costs that will be incurred by the State.

The report should be sent to the right-of-way unit for appraisal adjustment. If at any point in the monitoring process Caltrans feels the owner's progress is unsatisfactory, the PM must initiate actions that will decide if the schedule slippage is such that Caltrans should take over the investigation and/or remediation process. Such a decision should involve upper district management.

Case 2 - Remediation by Caltrans

If the property owner or responsible party does not perform a remedial investigation or remediate the site, or fails to show satisfactory progress in these activities, then Caltrans may decide to assume such responsibilities.

Prior to the start of the Caltrans remedial investigation, design changes to avoid the site or minimize hazardous waste involvement must be evaluated. If site avoidance is not possible and a Caltrans remedial investigation will be needed, the PM should request the district hazardous waste unit to undertake the appropriate studies. These studies must be coordinated with the right-of-way unit for necessary rights of entry and required investigation. The remedial investigation must be comprehensive enough to fully characterize the site, by identifying the types of contamination, the extent of contamination and the quantities of impacted soil and/or ground water. The site remedial investigation must also be comprehensive enough for appropriate remediation methods to be identified and evaluated.

Projects with contamination issues are investigated using district on-call hazardous waste investigation contracts through the task order process. A more extensive Remedial Investigation/Feasibility Study (RI/FS) will be required if: (1) substantial contamination is present, or if (2) the site is a listed State or federal Superfund site.

The Remedial Investigation is a site investigation adequate to characterize the site's size and the types and quantities of contamination that are present specifically for the purpose of planning a remediation. The Feasibility Study is an evaluation of the types of remediation that will clean up the site's contamination. Remediation strategies range from digging up the contamination for disposal at an appropriately permitted facility to complex vapor extraction systems or bioremediation techniques.

The RI/FS time frame is difficult to predict because the work may be subject to regulatory agency oversight and therefore subject to changes pursuant to the requirements of the agencies. Therefore, sites requiring an RI/FS are often considered high risk and should be avoided whenever possible. If such a site cannot be avoided it must be addressed as early in the project development process as possible so that costs can be adequately evaluated and every effort can be made to ensure that remediation of the site does not disrupt the transportation project schedule. The regulatory agency with oversight authority must be involved early and consistently through the process in order to avoid regulatory delays. Whenever such sites are acquired for a project, the Headquarters Division of Legal must be contacted regarding retention of the appropriate hazardous waste investigation records for cost recovery actions.

Hazardous Materials Disclosure Document to Clear Property for Acquisition

No property acquisition shall take place until hazardous waste/material investigation reports have been completed and appraisals reflect the findings. The Hazardous Materials Disclosure Document – Acquisition form (ENV-0001-A) documents the investigation findings and if appropriate clears a property for acquisition for use in a transportation project. The Hazardous Materials Disclosure Document – Acquisition form is a required attachment to the Certificate of Sufficiency (*Right of Way Manual* Exhibit 6-EX-9). The Certificate of Sufficiency is transmitted by right-of-way engineering and approved and signed by both the project engineer and the design senior. The Hazardous Materials Disclosure Document – Acquisition form is completed by district hazardous waste staff, is approved and signed by the district hazardous waste coordinator, and transmitted to design. Design staff is responsible for providing the initial right-of-way requirements and any subsequent requirement changes to the district right-of-way engineering unit and district hazardous waste unit. Right-of-way engineering is responsible for providing appraisal maps to the district

hazardous waste staff so that they may perform the appropriate investigations in order to complete the Hazardous Materials Disclosure Document – Acquisition form.

The Hazardous Materials Disclosure Document – Acquisition form will identify which parcels can be acquired, which parcels can be acquired where the parcel is impacted by contamination, and which parcels cannot be acquired. Additional details about the disposition of each parcel are included as needed and additional requirements may be identified for parcels impacted by contamination.

Exception Request to Purchase Contaminated Properties

When a contaminated property must be purchased for the completion of a transportation project, the project manager, in coordination with district hazardous waste, right-of-way, project delivery, and legal staff shall prepare an Exception Request for Headquarters' approval. The request should be sent to the hazardous waste staff within the Headquarters Division of Environmental Analysis and include at a minimum the following information:

1. Appraised value of the parcel sought to be acquired both "clean" and "as-is."
2. A summary of the project (including programmed/approved right-of-way and construction costs) and how project construction (including utility relocation within the highway project limits) will impact on the contaminated area. As to the groundwater testing, whether the groundwater is or is not contaminated and whether remediation is or is not required.
3. Type and extent of hazardous waste (summary of the hazardous waste investigation), including source, and responsible parties, if known. Specifically address how the contaminated property will impact the project cost, scope and schedule, and define the risks associated with acquisition.
4. Estimated cost to Caltrans for remediation, including an assessment of future liability (on and possible off site) if Caltrans assumes responsibility for remediation.
5. Why it is not practical to defer the project or to modify the project to avoid the contaminated property(s).
6. Options considered to avoid contamination during the project development process (for example, deleting or delaying portions of the project affected by the contamination until resolution of the problem by others; modification of the project to accommodate the owner's cleanup during and or after project completion; acquisition of permanent or temporary easement rather than fee).
7. Type of remediation proposed, including whether the Department has approval from the appropriate regulatory agencies.
8. Why the property owners, or other responsible parties, have not assumed responsibility for remediation.

9. Steps that have been or will be taken to recover remediation costs and an evaluation from Caltrans Legal regarding the chances for success.
10. List of other contaminated or potentially contaminated parcels on the same project.

The approval process is expected to take thirty days from the time that a complete package is received by the Headquarters hazardous waste staff within the Division of Environmental Analysis.

1. A summary of the project (including programmed/approved right-of-way and construction costs) and how project construction (including utility relocation within the highway project limits) will impact on the contaminated area. As to the groundwater testing, whether the groundwater is or is not contaminated and whether remediation is or is not required.
2. Type and extent of hazardous waste (summary of the hazardous waste investigation), including source, and responsible parties, if known. Specifically address how the contaminated property will impact the project cost, scope and schedule, and define the risks associated with acquisition.
3. Estimated cost to Caltrans for remediation, including an assessment of future liability (on and possible off site) if Caltrans assumes responsibility for remediation.
4. Why it is not practical to defer the project or to modify the project to avoid the contaminated property(s).
5. Options considered to avoid contamination during the project development process (for example, deleting or delaying portions of the project affected by the contamination until resolution of the problem by others; modification of the project to accommodate the owner's cleanup during and or after project completion; acquisition of permanent or temporary easement rather than fee).
6. Type of remediation proposed, including whether the Department has approval from the appropriate regulatory agencies.
7. Why the property owners, or other responsible parties, have not assumed responsibility for remediation.
8. Steps that have been or will be taken to recover remediation costs and an evaluation from Caltrans Legal regarding the chances for success.
9. List of other contaminated or potentially contaminated parcels on the same project.

The approval process is expected to take thirty days from the time that a complete package is received by the Headquarters hazardous waste staff within the Division of Environmental Analysis.

Hazardous Waste Management Plan

The RI/FS for potential mitigation measures for the contaminated site constitutes the Hazardous Waste Management Plan (HWMP). The Hazardous Waste Management Plan (HWMP) is a decision-making document that describes the management of a contaminated site, including remediation, schedule, etc. It summarizes the results of the RI/FS. The RI/FS will include a list of remediation options for cleaning up the site. The type and complexity of the HWMP is determined by the PM. Normally, the HWMP is developed at the conclusion of the hazardous waste investigation. Involvement of potential responsible parties is advised, so that any cost recovery efforts cannot be challenged on the basis that the parties were excluded from the mitigation decision process. The HWMP is usually written by the project manager/project engineer, in coordination with the district hazardous waste unit.

Hazardous Waste Management Plan Decision Meeting

A Hazardous Waste Management Plan (HWMP) Decision Meeting with the PDT is called by the PM. Key team members for this meeting include the district hazardous waste staff, construction staff, and a Headquarters Division of Legal representative. This team reviews the Caltrans investigation and the management plan and selects a remediation strategy based upon the proposals and anticipated schedules provided in the RI/FS. Cost recovery decisions and procedures, if applicable, are decided at this time. The Headquarters Division of Legal is responsible for defining what documentation and support information will be necessary for the cost recovery effort.

Remedial Action Plan

Once a remediation strategy has been selected, a Remedial Action Plan (RAP) needs to be developed to implement the remediation. The RAP specifies the details required to carry out the selected remediation strategy. After the investigation, the RAP will be prepared by a consultant or the district, depending on the type of remediation selected. The RAP will be included in the construction contract that will be used to implement it. Development of the RAP is the responsibility of the PM, with assistance from the district hazardous waste unit.

Regulatory Agency and Public Involvement

Depending on the type and extent of contamination, the RAP may require approval by appropriate regulatory agencies, as well as necessary public notification. On-site

treatments will need permits from various regulatory agencies, which could require several months to secure.

It is advisable to provide the public with early notification of significant hazardous waste investigations and subsequent remediation activities. This often defuses potential adverse public reaction that may otherwise occur when the remediation work begins. The PM is responsible for coordinating the community relations effort but must work with the district's public information unit to design and implement it. Guidance on proactive public involvement in the remediation of contaminated sites is available from DTSC and US EPA.

Remediation - Hazardous Waste Plans, Specifications, and Estimate

It is Caltrans policy and usually preferable to remediate contamination prior to construction of the transportation project. This eliminates potential project delays once construction begins. The remediation will require a contract and a PS&E based on the RAP. The design unit is responsible for the PS&E for the remediation. The construction unit is responsible for administration of the remediation contract.

Exception Request to Remediate Contamination During Construction

When remediation of a contaminated property must be conducted as part of the construction of a transportation project the remediation costs must be included in the cost of the project and an exception request for the Regional or District Director's approval shall be prepared. The exception request is prepared by a team that includes the project manager, the district project delivery functional manager and/or staff, and the district hazardous waste and legal staff. In most cases, the district hazardous waste staff will have primary responsibility for preparation of the exemption and the necessary special provisions because they will be most familiar with the contamination issues and remediation requirements. However, they will need significant support from the rest of the team particularly regarding the integration of the remediation activities into the transportation project. The request shall be reviewed by the hazardous waste staff of the Headquarters Division of Environmental Analysis prior to submission to the Regional or District Director for signature.

Exception requests to remediate contamination during construction shall at a minimum including the following information:

1. A summary of the project and how the project will impact the area of contamination.
2. The type and extent of contamination (a summary of the hazardous waste investigation), including contamination classification (for example: hazardous or designated waste), contamination source, and responsible party if known.
3. The estimated cost to Caltrans for remediation, including as assessment of future liability if Caltrans assumes responsibility for the remediation.
4. An explanation of why it is not practical to defer the project until after remediation is complete or to modify the project to avoid the contaminated property.
5. The type of remediation proposed, including documentation from all appropriate regulatory agencies if needed.
6. An explanation of why the property owner or other responsible parties have not assumed responsibility for the remediation.
7. The steps that have been or will be taken to recover remediation costs and an evaluation from Caltrans Legal regarding the chance for success of success of such cost recovery.
8. The draft special provisions for the remediation items of work.

Recovery Actions from Responsible Parties

Whether contamination is encountered prior to construction or during the construction phase, the Headquarters Division of Legal will be responsible for pursuing appropriate cost recovery from potentially responsible parties as appropriate. Support will be provided from all Caltrans functional units that have information for such recovery actions.

Management of Contaminated Soil Not Requiring Remediation

There are situations where contaminated soil exists within the footprint of the project but it is not necessary or practicable to remediate it (although excavated soil may require special management and disposal). In these cases an exemption is not needed to manage the soil. Examples of this type of contamination include aerially deposited lead, naturally occurring asbestos (NOA), fill areas that can be defined as Areas of Contamination (AOC), and areas with low levels of petroleum hydrocarbon contamination. In all of these cases design staff must work closely with hazardous waste staff to plan the project and prepare specifications so that proper precautions are taken to ensure that all regulations and laws are complied with, that all appropriate health and safety precautions are incorporated into the project, and that the design accommodates appropriate and cost effective soil management. In all of these cases excess soil should be minimized because it may be necessary to dispose of

it as a hazardous waste, which adds cost to the project and creates long-term legal and financial liability for Caltrans. There are specific issues to consider when dealing with soils containing aerially deposited lead and NOA, and when using the Area of Contamination policy and so these topics are discussed in greater detail.

Area of Contamination (AOC) Soil Management Procedures: When managing soil in a location defined as an AOC, excavated soil will be temporarily stockpiled on site in an area with contiguous contamination and then placed back into the excavation when the project is completed. The work can be done within the project area, but the soil is not to be moved out of the area of contamination.

Any excess material that cannot be replaced in the original excavation must be classified as required by Title 22 CCR, disposed of in compliance with all laws and regulations, and if appropriate handled as hazardous waste and properly disposed of according to applicable hazardous waste laws and regulations.

The following steps shall be taken to ensure that environmental conditions are not materially changed by construction activities:

Pre-excavation activities to be performed by the project manager in coordination with the district hazardous waste staff prior to or during the design phase:

1. Sample the proposed area prior to excavation to assess the presence of contaminants.
2. Identify the boundary of the AOC within the project limits.
3. Consult with appropriate regulatory agencies to ensure that the planned movement, storage, and disposal processes are in compliance with all related rules, laws and regulations. (AOC policy allows the reuse of soils containing hazardous waste (as regulated by DTSC) but does not relieve Caltrans from liability for compliance with other applicable Federal, State, and local laws and regulations enforced by authorities such as the Regional Water Quality Control Board or local county.)
4. Prepare special provisions, based upon the information obtained during the sampling and assessment, to institute appropriate worker health and safety precautions (pursuant to 29 CFR 1910.120 and 8 CCR 5192) during soil excavation, stockpiling, and re-placement activities.
5. Prepare special provisions, based upon the information obtained during the sampling and assessment, to institute the specific excavation, stockpiling, re-placement, and disposal in the case of excess, of the contaminated soils.

During the project the resident engineer, with assistance from the district hazardous waste staff as needed, shall:

1. Ensure that the contaminated soils are not moved outside the AOC.
2. Ensure that excess contaminated soil that cannot be utilized within the original excavation is sampled and analyzed. The analytical information shall be used to determine appropriate off-site transportation, treatment, and/or disposal of the soil.

Aerially Deposited Lead Soil Management Procedures: When managing soil containing aerially deposited lead, soil is usually sampled and analyzed during the development of the environmental document or in some cases during the design phase of the project. The district hazardous waste staff will provide a recommendation regarding soil management. Districts with an ADL Variance from hazardous waste laws may reuse soils containing hazardous waste levels of lead as long as certain conditions regarding lead concentration, clean cover, placement location, etc. are met. When the Variance is invoked and soils containing hazardous waste levels of lead will be reused on a project, the location where the ADL soil will be placed should be clearly shown on the project plans unless staging issues prevent such detailed planning.

In all cases where ADL is a concern, hazardous waste staff will analyze the lead concentration data for different depths separately and in combination and will provide specific recommendations for soil management. In some cases, the top two feet of soil will need to be disposed at a Class I landfill, but the rest may be useable in the project. In some situations it may be more cost effective to stockpile soil and resample prior to disposal, but of course this is only feasible when there is enough area within the project to do so. Design staff must work closely with the hazardous waste staff to ensure that the most cost effective approach that works within the project logistics is used. Design staff must confer with the hazardous waste staff if there are any design changes that may impact the soil management plans.

Naturally Occurring Asbestos Soil Management Procedures: Naturally occurring asbestos (NOA) must be addressed and identified when planning, developing, constructing, maintaining and assessing transportation facilities. When soil or rock is disturbed, there is a potential for exposure to NOA from airborne dust. Areas containing NOA should be managed in a manner that protects workers, the public and the environment. Design staff shall coordinate with the hazardous waste staff to develop special provisions to ensure that NOA is properly managed during construction.

NOA is regulated through the "Airborne Toxic Control Measures (ATCM) for Construction, Grading, Quarrying and Surface Mining Operations" and the "ATCM for Surfacing Applications." These two ATCM measures are

regulated by the California Air Resources Board (CARB). In addition to the CARB measures, the California Department of Health Services (DHS) and the Integrated Waste Management Board (IWMB) have issued memoranda that address the transportation and disposal of NOA materials. The DHS states that although they do not regulate releases of NOA to the environment, they could issue a "stop action" order if they believed the release would be harmful to the public or the environment. The IWMB determined that NOA is a hazardous waste based on the friability of the waste- the ability of the material to become airborne through handling, transportation or disposal. Currently, material containing asbestos is defined as a hazardous waste if the material contains 1% or greater friable asbestos by weight. NOA is defined as a hazardous substance if detected at concentrations greater than or equal to 0.25% using ARB Method 435 analysis (Polarizing Light Microscropy).

NOA is generally considered a medium risk issue and site investigation, to determine the presence of NOA, is generally performed during the PA&ED phase. In areas where NOA may be present, precautions should be taken that follow the Asbestos Construction Industry Standard (Title 8 CCR 1529) when conducting work disturbing NOA unless an evaluation by a California Registered Geologist has been conducted and no NOA was identified. The Construction ATCM, found in Title 17, lists three conditions that will require either sampling or the assumption that NOA will be disturbed:

1. The area is in a zone adopted by the ATCM to contain NOA. District maps are available at: http://onramp.dot.ca.gov/hq/maint/roadway/gis/noa.shtml
2. The Owner/Operator has knowledge that there is NOA in the area to be disturbed, or
3. The Owner/Operator discovers that there is NOA at the project site.

If any of these conditions are met, certain dust control measures must be implemented during construction activities, such as dust suppression, track-out control and stockpile coverage. For projects that disturb one acre or greater, a formal Dust Mitigation Plan must be submitted to the local air pollution control district for approval. For projects less than one acre, dust control measures must be implemented, but a formal plan need not be submitted for approval.

Prior to construction, environmental project managers must know the approximate quantity of NOA soil that will be disturbed and how the soil is to be managed during construction. Through site investigations, hazardous waste should be able to determine how much soil containing NOA will be impacted and what the concentrations of NOA are. There may be special health and safety issues that will require construction personnel and oversight staff to have special awareness training and air monitoring to be performed

during construction. These issues must be addressed in the project specifications and their impact to the construction activities considered.

It is important for staff involved in the constructability review of a project to know if there are issues with staging of the NOA-contaminated soil. The Construction ATCM allows for re-use of NOA material on-site as long as stabilization measures (encapsulation) are utilized. If re-use of NOA-contaminated soil is not feasible or there is surplus, design will need to decide how to manage the soil. Alternatives to consider include temporary stockpiling or transportation to a licensed disposal facility.

Figure 18-1 Hazardous Waste Sites for Risk Analysis

High Risk Issues	Medium Risk Issues	Low Risk Issues
Major Hazardous Waste Issues (Require design change)	Moderate (Require mitigation and/or minor design change)	Nominal (No change in design or mitigation)
Landfills *Historical/Unpermitted* *Permitted*	ADL Asbestos in Serpentine	Asbestos in Structures Lead in Structures
Underground Storage Tanks *Gas Stations (Post 1980 use)* *History of "noncompliance"*	Storage Tanks *Gas Stations (Pre 1980 only)* *Above Ground Storage Tanks*	
Industrial property (>20 years of use and with apparent poor best management practices) *Geothermal Plant* *Plating Shops* *Chemical Plants* *Refineries* *Bulk Fuel Facilities* *Computer Manufacturer*	Industrial property (<20 years of use and with apparent good best management practices) *Lumber Mills* *Agricultural Fields* *Crop Dusting Operations* Railroad Property	
Junk Yards	Non Chapter 15 Surface Impoundments	
Former Department of Defense Facilities	Mines/Quarries *Class II (ie, clay mining)*	
Ship Yards	Debris Laden Fill	
Railroad Yards		
Mines *Acid Mine Drainage* *Class I*		
Class I or II Surface Impoundments Metal Recycling Yards NPL Sites		

Figure 18-1 should be used in conjunction with Figure 18-2. High-risk sites are expected to cost at least 20 percent of the Construction costs to investigate and remediate (clean up). Medium risk sites are expected to cost between 10 percent and 20 percent of the Construction costs to investigate and remediate. Low risk sites are expected to cost less than 10 percent of the Construction costs to investigate and remediate. The environmental document shall include complete site characterization information for high and medium risk sites.

Figure 18-2 Hazardous Waste Investigation Activities

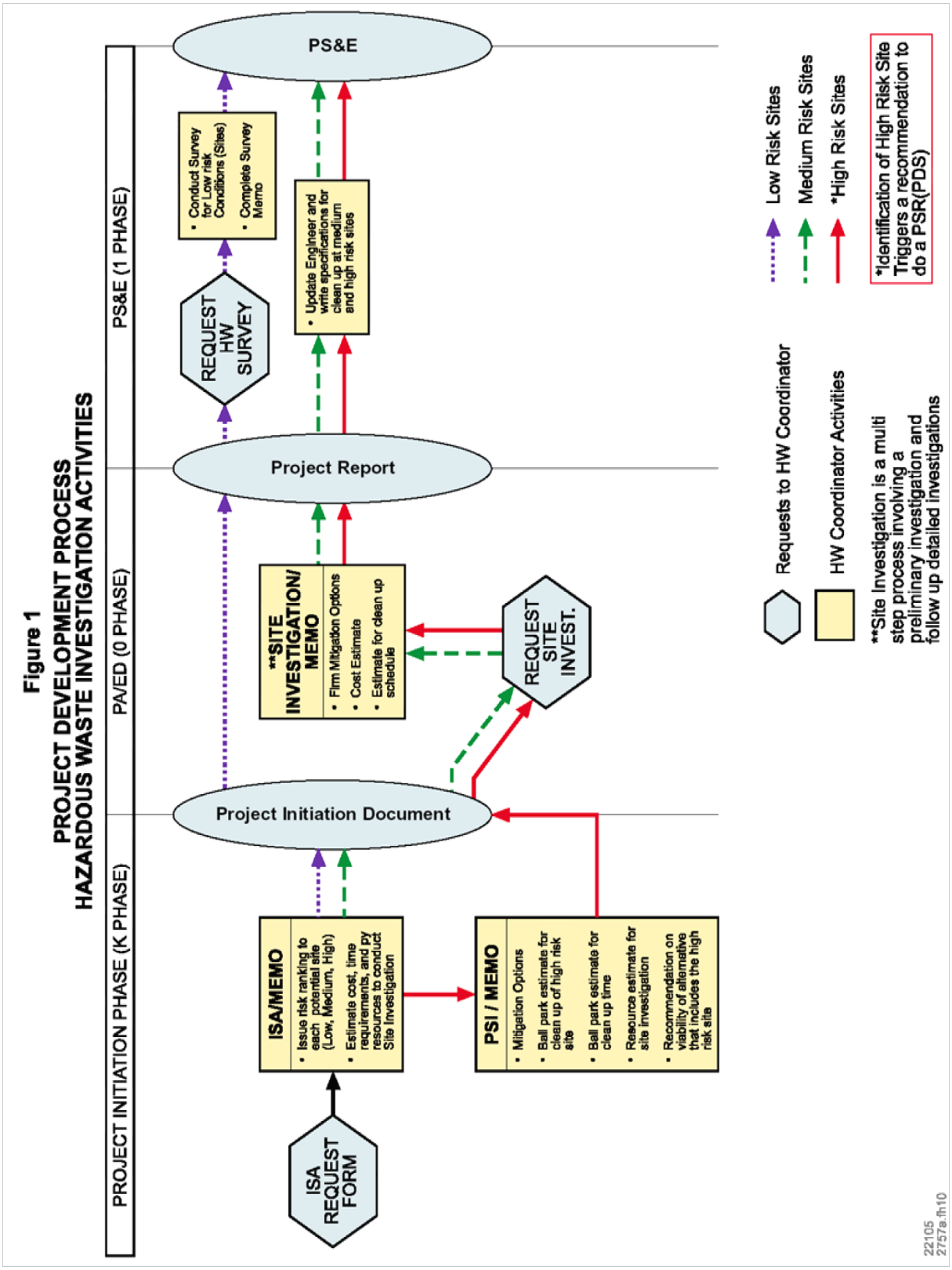

Figure 18-2 Summary

ISA: A regulatory record review, historical research (past land uses), and field review.

- If a parcel is considered to be a high risk to Caltrans subsurface information must be included in the PID.
- If a parcel is considered to be a medium risk to Caltrans further investigations may be delayed until PA&ED.
- If a parcel is considered to be a low risk to Caltrans further investigations may be delayed until PS&E.

The hazardous waste coordinator will include estimated cost, proposed scope of investigation, and schedule for each site/issue in the ISA memorandum to the project engineer.

Conduct detailed site investigation for inclusion in environmental document for high and medium risk sites.

Provide site investigation memorandum to project engineer that includes the consultants recommended mitigation options, cost estimates, and estimated cleanup schedule for each site.

Include subsurface information, preferred mitigation option, and comparison of impact of no build versus cleanup options on site in the environmental document.

Conduct site surveys for low risk sites for inclusion in PS&E package.

Provide survey memorandum to project engineer that includes cleanup options and health and safety concerns.

Update the project engineer and write specifications for cleanup at medium and high-risk sites.

Figure 18-3 Hazardous Waste Assessment Request Form

ATTACHMENT 1

State of California
Department of Transportation

HW ASSESSMENT REQUEST FORM

Date of Request _____
Assessment Needed by_____

Check the type of assessment being requested

PID	PA/ED	PS&E
New ISA PSR ❑	**Site Investigation Request** ❑	**HW Survey Request** ❑
New ISA PDS ❑	**Update Site Investigation** ❑	**Update Site Investigation** ❑
Updated ISA Request ❑	**New ISA Investigations** ❑	**New ISA Investigation** ❑
PDS PSI Request ❑		

The items listed below are all necessary for a thorough hazardous waste assessment. The more information provided, the more accurate the assessment, schedule, resources, cost and duration estimates that can be provided Submit an updated request form as new information becomes available.

District ____ EA _____ Co/Rte/KP(PM)_____Attach purpose and need statement
Project Description: _____
_____
Location: _____
Requestor's Name: _____Title:_____ Phone & Fax:_____
Project Manager: _____ Project Engineer: _____

Background Information
1. Is this an oversight project? No __ Yes __. Is there any Rail Road involvement? No __ Yes __
2. Are any previous hazardous waste, geotechnical, or asbestos survey reports available? No __ Yes __(If yes – where/title of report) _____
3. Is lead or other contaminated soil known to be present within the project? No ___ Yes ___ (If yes – explain)
_____
4. Is there any information not mentioned above that the District HW Unit should know? (If yes please attach.)

Right of Way
1. Are R/W acquisitions or easements needed? No __Yes __ (If yes, attach existing & proposed on plans with assessors parcel numbers and street addresses)
2. Are there any known sensitive property owner issues or concerns? No __Yes __ (If yes – explain)
_____

Project Information
1. Attach geometric, aerial, or other plans with all alternatives clearly shown to this request. Plans not attached will be available on: _____. The plans must show the proposed boundaries of the project and any of the following anticipated design elements: location, depth, and horizontal limits of excavations including those for roadway and structure excavation, drainage elements, and utility relocation. Also show any surface water bodies (i.e., creeks, wetlands, reservoirs, etc.) on plans or other attached maps. Provide typical cross-sections if available.
2. Indicate location, type, and composition of utilities and drainage to be relocated, abandoned, or modified.
3. Is removal of yellow thermoplastic or paint striping part of project? No __Yes __
4. Is groundwater expected during construction __ and / or post construction __ Anticipated depth ____

What is the concept to handle groundwater post construction? - Pump Station __ Boat slab __ Other __

5. Is disposal of excavation material anticipated? No __ Yes __. How much (quantity)? _____ Is reuse possible on the project? No __ Yes__ . How much (quantity)? _____.

_____

Structure Information
All Structure work for project must be described and plans provided. Provide As-builts. Use separate sheet if necessary.
_____
_____

Any useful information not mentioned above the Hazardous Waste Office should know about?
_____
_____

Instructions

The information on this form will assist the hazardous waste coordinator in developing an ISA and/or sampling plan that will provide an estimated cost, scope, and schedule, and/or health and safety plan for construction workers.

Background Information:

1. Is the project adjacent to railroads, or does it cross railroads?
2. Has any subsurface sampling been done at the project site?
3. Is the project site on, or adjacent to a highway or industrial site? Is there any reason to suspect the presence of contamination?
4. For example, are there any structures present that could have contributed hazardous waste in the past (former gas stations, etc.) or illegal dumping, etc.?

Right-of-way:

1. Will Caltrans be acquiring new property?
2. Will any property owners hesitate to grant right of entry permits for sampling activities?

Project Information:

1. Attach any aerial photos or maps that show the properties present and past condition.
2. Show on attached maps where any new utilities will be located with depths and type of material. Also show where existing utilities will be removed with depths and type of material.
3. If yes, indicate if traffic lane will be removed also.
4. Indicate if ground water will be encountered or will have an impact on construction (dewatering, etc.).
5. Will surplus material be generated, or will fill be needed, or both (move excess from one part of project to another part of project)?

Structure Information:

Will the project include columns? Where will foundations be excavated? This information will assist the hazardous waste coordinator in determining sample locations.

Other Information:

Other information that will assist the hazardous waste coordinator in developing an ISA and/or sampling plan.

Figure 18-4 Initial Site Assessment (ISA) Checklist

INITIAL SITE ASSESSMENT (ISA) CHECKLIST

DATE: _____

PROJECT INFORMATION

DISTRICT **County** _____ **Route** _____ **KiloPost(PM)** _____ **EA** _____

Scope of Project:

_____

_____

_____

Project Engineer: _____ **Telephone** _____

Environmental Coordinator: _____ **Telephone** _____

_____

DATE ISA NEEDED: _____

Attach the project location map and an aerial photo to this checklist to show the location of proposed RW and all known and/or potential hazardous waste sites.

1. Project Features: New RW? ☐ Excavation? ☐ Railroad Involvement: ☐
   Structure Demolition/Modification? ☐ Subsurface Utility Relocation ☐
2. Project Setting: Rural ☐ Urban ☐
   Current Land Uses: _____
   Adjacent Land Uses: _____
   (Industrial, light industrial, commercial, agriculture, residential, other)
3. Check Federal, State and local environmental and health regulatory agency records as necessary to see if any known hazardous waste site is in or near the project area. If a known site is identified, show its location on the attached map and attach additional sheets as needed to provide all information available pertinent to the proposed project. **IS PROJECT AFFECTING SITES LISTED ON CORTESE LIST? NO ☐ YES ☐ IF YES DESCRIBE SITE:**

_____

_____

4 Conduct Field Inspection. _____ **Date** _____

Storage Structures/Pipelines:		**Contamination: (spill, leaks, illegal dumping, etc.)**		**Hazardous Materials: (asbestos, lead, etc.)**	
USTs		Surface staining		Buildings	
Surface tanks		Oil sheens		Sprayed-on	
sumps	ponds			fireproofing	
drums	basins	Odors		Pipe wrap	
transformers		Vegetation, carnage		friable tile	
landfill		Other		Acoustical plaster	
other				Serpentine	
				paint	
				other	

5. Other comments and/or observations:

_____

_____

ISA DETERMINATION:
Does the project have potential hazardous waste involvement?
If there is known or potential hazardous waste involvement, is additional ISA work needed before task orders can be prepared for the preliminary Site Investigation? If yes, explain and give estimate of additional time required:

_____

_____

ISA CONDUCTED BY: _____ **DATE:** _____

CHAPTER 19 – Value Analysis

Table of Contents

CHAPTER 19 – Value Analysis..... 19-3
ARTICLE 1 Introduction and Definitions 19-3
Introduction..... 19-3
Background..... 19-3
Definitions 19-4
ARTICLE 2 Federal Statutes 19-6
National Highway System Designation Act 19-6
ARTICLE 3 Policies 19-7
ARTICLE 4 Benefits of Value Analysis 19-8
ARTICLE 5 Value Analysis Application 19-11
Transportation Project Studies..... 19-11
Product Studies 19-11
Process Studies 19-11
Hybrid Project/Process Studies..... 19-12
ARTICLE 6 Value Analysis Roles and Responsibilities..... 19-12
Value Analysis Administrators..... 19-13
ARTICLE 7 Value Analysis Process and Procedures 19-21
Study Schedule 19-22
Alternative Study Schedule 19-22
Value Analysis Study Report..... 19-28
Value Analysis Alternative and Numbering Convention 19-28
Value Analysis Sets 19-29
Value Analysis Performance Criteria 19-30
ARTICLE 8 Value Analysis Study Charging Details 19-33
Typical Cost..... 19-33
Typical Charging 19-34
ARTICLE 9 Value Analysis Program Reporting 19-34

Table of Figures

Figure 19-1 Potential Value Analysis Benefits versus Project Timing 19-10
Figure 19-2 Workshop Responsibilities..... 19-20
Figure 19-3 Value Analysis Job Plan and Study Activity Chart 19-23
Figure 19-4 Value Analysis Job Plan Participation Chart 19-25
Figure 19-5 Value Analysis Sets Example 19-29
Figure 19-6 Performance Criteria Matrix Example 19-31
Figure 19-7 Performance Rating Matrix..... 19-32

CHAPTER 19 – Value Analysis

ARTICLE 1 Introduction and Definitions

Introduction

Value analysis (VA) or value engineering (VE) is a function-oriented, structured, multi-disciplinary team approach to solving problems or identifying improvements. The goal of any VA study is to:

- Improve value by sustaining or improving performance attributes (of the project, product, and/or service being studied)
- While at the same time reducing overall cost (including life-cycle operations and maintenance expenses)

The purpose of this chapter is to define the policies and procedures of the VA process within Caltrans.

Background

In 1947, engineer Lawrence Miles originated the value analysis system while working for General Electric. The original five-step process included:

1. Information
2. Analysis
3. Creativity
4. Judgment
5. Development

The VA methodology was adopted and renamed by the United States Navy, popularizing the term value engineering. The use of value engineering continued to expand throughout the federal government over the next two decades. Today nearly every federal agency with construction or purchasing responsibility is using this methodology. VA is an improvement tool that is applicable to any customer-based endeavor.

Caltrans' VA program has evolved over the years since the first study was conducted in 1969. The majority of VA studies are employed to improve projects, but a

growing number of studies are sponsored to improve work processes in order to respond to changing customer needs, new regulatory or policy challenges and technology advances.

Definitions

Bridge – According to Federal Highway Administration (FHWA), a bridge is a structure including supports erected over a depression or an obstruction, such as water, a highway, or a railway, and having a passageway for carrying traffic or other moving loads, and with an opening measured along the center of the roadway of more than 20 feet between under copings of abutments or spring lines of arches, or extreme ends of openings for multiple boxes. It may also include multiple pipes, where the distance between openings is less than half of the smaller contiguous opening.

Cost – The sum of all costs involved in delivering a project, product or process. This includes capital cost to construct, support cost to develop the project, ownership cost to operate and maintain, and the user-benefit cost (e.g., motorist savings resulting from increased level of service).

Function Analysis – The process of discerning the elemental functions comprising a project, product, or service.

Function Analysis System Technique (FAST) diagram – A method of mapping the relationships between functions within a project. Functions are analyzed by aligning them in a "how" and "why" logic diagram.

Job Plan – Defines the VA study procedure. Caltrans has adopted an eight-step VA study procedure following the FHWA's Value Engineering Policy (Order 1311.1A).

Paired Comparison – A method used where order relations (or preferences) are more easily determined than measurements. In the comparison of a group of objects, each pair of objects are tested with each other. For example, in transportation comparisons, one might say "mainline operation" is more important (or preferred) than "project schedule".

Performance Attributes – Specific characteristics which are essential to achieve a project's objective. These characteristics can possess a range of values and can be measured either qualitatively or quantitatively.

Performance Criteria – Performance is the capacity of a project, product or process to fulfill its intended function. Consensus on the primary performance expectations is critical.

Performance Criteria Matrix – A technique using the paired comparison method of evaluating the importance of performance attributes in meeting the project's purpose-and-need.

Performance Requirements – Characteristics of the project, product, or process necessary to comply with regulations and policies. Requirements are absolute and must be explicitly met.

Projects – Transportation projects, as defined by FHWA, are defined in the environmental document (ED) and may include multiple construction contracts over many years.

Return on Investment – The cost savings or performance benefit realized from the implementation of a VA study alternative. The return on investment is calculated by dividing the savings/benefit of the alternative by the cost of the study and can be described as a ratio (i.e., 10:1).

VA/VE – Systematic application of techniques by a multi-disciplinary team to improve the value of a project, product, or process by identifying and evaluating functions. The study objective is to provide the basic functions of the project, product or process at the lowest overall cost. The primary goal of a VA/VE study is to improve value.

VA and VE are used interchangeably throughout the manufacturing and transportation industry. Many federal agencies, including the FHWA, use the term VE while Caltrans uses VA. In this manual, the term VA will be used.

Value – The relationship between performance of a project, product, or process and the cost of obtaining it. Optimum value is reached by maximizing performance while minimizing cost. Value can be expressed as:

$$\text{Value} = \frac{\text{Performance}}{\text{Cost}}$$

ARTICLE 2 Federal Statutes

National Highway System Designation Act

Passage of the *National Highway System Designation Act of 1995, 23 United States Code*, Section 106 included a mandate directing the U.S. Secretary of Transportation to develop a program requiring state departments of transportation to carry out a VA study for all projects on the National Highway System (NHS) costing $25 million or more. The FHWA published its VA Regulation implementing this mandate on February 14, 1997.

Currently, *Title 23 United States Code*, Section 106 requires a value engineering analysis on all federally funded National Highway System projects with a total project cost (right-of-way, construction, and support) of $50 million or more, regardless of whether Caltrans employees, local agencies, consultants, or others are accomplishing the work. In addition, a value engineering analysis is mandated on all federally funded National Highway System bridge projects with a total project cost of $40 million or more.

Title 23 United States Code, Section 106 requires state departments of transportation to establish a program to improve project quality, reduce project costs, foster innovation, eliminate unnecessary and costly design elements, and ensure efficient investments by requiring a VA study. A VA study means the systematic process of review and analysis of a project, during the concept and design phase, by a multidiscipline team of persons not involved in the project. The study is conducted to provide recommendations for providing the needed functions safely, reliably, and at the lowest overall cost, improving the value and quality of the project, and reducing the time to complete the project. The state departments of transportation must ensure that a VA study has been performed on all applicable projects and that all resulting, approved recommendations are incorporated into the plans, specifications, and estimate. The legislation requires the state departments of transportation VA program to administer procedures that, at minimum, include the following activities:

- Identification of candidate projects for VA study.
- VA study process following FHWA's VA "job plan".
- Clearly defined roles and responsibilities of VA study participants and study coordinators.

- Guidance on VA study timing requirements and scheduling to ensure optimum results.
- VA study decision-making, implementation, reporting and monitoring requirements.

The procedures outlined in this chapter and Caltrans' VA guidance ensures that VA studies comply with the federal mandate for project studies.

Often a corridor's "parent" project is segmented into sub-projects to better facilitate project funding. If a VA study was conducted on the parent project analyzing the entire project corridor, as defined by the environmental document, then any subsequent contracts (or sub-projects) will be in compliance with the federal VA requirement. However, if a VA study was not conducted on the entire project corridor, as defined by the environmental document, then all the sub-projects would need a VA study for compliance.

ARTICLE 3 Policies

Overseen by the FHWA, Caltrans will maintain a value analysis program to insure the effective use of the VA applications throughout the project development process. Caltrans policy is to perform a value engineering analysis on all projects mandated by federal law.

The VA study is most effective in the beginning stages of project development, but it may be performed at any stage of project development. The project is defined by the environmental document and may consist of several construction contracts or phases.

The VA study must follow the VA job plan as described in this chapter. Deviation from the job plan could jeopardize Caltrans' compliance with the law. Caltrans' VA Program Manager can approve deviations from the job plan. Job plan modifications are described later in this chapter.

Also, there is no "exception process" to the federally mandated VA study. Failure to comply could jeopardize the project's funding ability, future funding, and/or loss of Caltrans' delegation authority.

ARTICLE 4 Benefits of Value Analysis

VA is an effective problem solving and quality assurance tool that can facilitate Caltrans goals, to maximize safety, mobility, delivery, stewardship, and service. Historical data indicates that projects over $15 million can benefit greatly from this tool. VA studies should be considered to:

- Meet or exceed standards and safety objectives
- Foster a team approach to problem solving and project development
- Improve a project's performance while maximizing quality
- Identify and develop strategies to mitigate or avoid risks and the associated costs
- Identify opportunities which promote context-sensitive-solutions
- Validate project's scope, purpose-and-need, and baseline design

VA studies provide an opportunity for a structured and thorough review by functional experts. VA studies often reveal new information that fosters a project's advancement in a timely manner.

VA is an effective tool to ensure that Caltrans' responsibilities and liabilities as owner of the facility are adequately addressed in the project design. Caltrans has unique concerns, not to mention liability, for highway users' safety, environmental impacts and regional travel that may need to be balanced, but not compromised, with competing project objectives of partner agencies and project stakeholders.

With careful preparation and coordination, VA can aid in obtaining project stakeholder consensus on key project decisions, leading to the best possible design that is sensitive to the context of the impacted communities and environment.

Often, the earlier a VA study is undertaken, the more beneficial it will be. Conducting studies in the later phases of a project, after a significant amount of time and money has been committed to a chosen design, diminishes the opportunity for identifying viable improvements without compromising the delivery schedule.

The "benefit matrix" shown in Figure 19-1, Potential Value Analysis Benefits versus Project Timing, depicts the benefits that can be derived during the following four primary phases of project development:

1. Concept – Development of the project initiation document (PID) or project study report (PSR).
2. Approval – Activities to gain project approval and regulatory acceptance of the environmental document, known as Project Approval and Environmental Document (PA&ED).
3. Final Design – Development of Plans, Specifications, and Estimate (PS&E).
4. Construction – Analyzing constructability, identifying and assessing cost reduction incentive proposals (CRIPs) and/or evaluating the merit of proposed construction contract change orders (CCOs). A study during the construction phase does not meet the requirements of *Title 23 United States Code*, Section 106.

Figure 19-1 Potential Value Analysis Benefits versus Project Timing

Potential VA Benefits Scale ● = High ⦿ = Medium ○ = Low	**Concept** **PID**	**Approval** **PA&ED**	**Final Design** **PS&E**	**Construction** **CCO**
Supports sound decision-making	●	●	●	●
Develop solutions to difficult engineering challenges	●	●	●	●
Identify/assess risk and associated cost	●	●	●	●
Reduce project development support cost – expedite delivery	●	●	●	●
Extend expected level of service	●	●	●	⦿
Reduce capital cost to construct	⦿	●	●	⦿
Reduce cost to operate/maintain	⦿	●	●	○
Clarify purpose-and-need	●	⦿	○	○
Ensure land use compatibility	●	⦿	○	○
Identify best alternatives to meet Caltrans' safety and performance standards	⦿	●	⦿	○
Early discovery of opportunities and constraints	●	●	⦿	○
Build stakeholder consensus	●	●	⦿	○
Obtain input from community representation	●	●	⦿	○
Avoid/minimize environmental impacts	●	●	⦿	○
Avoid/minimize right-of-way impacts	●	●	●	○
Improve modal choices and connectivity	●	●	⦿	○
Identify optimum phasing/staging opportunities	⦿	●	●	○
Validate project scope	⦿	●	●	○
Validate/refine current project design	○	⦿	●	○
Reduce the need for construction contract change orders	○	⦿	●	○

ARTICLE 5 Value Analysis Application

In addition to transportation projects, the VA process can be effectively applied to other Caltrans products and processes. To propose a study, contact the Headquarters VA Program Manager or your district VA coordinator for more information. VA is typically applied to the following:

Transportation Project Studies

VA's positive impact on projects has been demonstrated during the key project development phases.

- Project Initiation Document (PID/K-phase)
- Project Approval and Environmental Document (PA&ED/0-phase)
- Plans, Specifications, and Estimate (PS&E/1-phase)
- Construction (4-phase)

Projects already in construction may be value analyzed at the discretion of the contractor and as specified in the construction contract's special provisions, leading to cost-reduction incentive proposals. The Headquarters Division of Construction administers these studies. Construction studies do not meet the FHWA requirement of performing VA.

Consult Figure 19-1, for guidance on when to schedule a study in order to achieve one or more specific objectives.

Product Studies

The VA methodology can also improve the quality of highway products. Products are items and systems described in Caltrans' *Standard Plans* and *Standard Specifications*, including reports and other documents Caltrans develops for various customers. Value analysis can help identify products that need to be updated due to changing technology, outdated applications or other changes that affect standards. For instance, VA studies of headlight glare screens, concrete barriers, and overhead signs have led to statewide modifications.

Process Studies

VA can improve the effectiveness of Caltrans processes, such as policies, procedures, and business practices. Process study topics that have benefited from VA studies

include workload balancing, project development procedures, intergovernmental reviews, district business plans, information access and distribution, regional strategic traffic operations plans, tort liability claims, maintenance operations, and support services.

Hybrid Project/Process Studies

The VA methodology can be used to develop or improve a process impacting a specific project. Examples include VA studies that developed approaches for managing a design-build project or developed project specific strategies for meeting National Pollutant Discharge Elimination System (NPDES) objectives.

ARTICLE 6 Value Analysis Roles and Responsibilities

This article defines the roles and responsibilities for those involved in the VA process. There are many people involved in the VA process. Each plays a vital role in the success of the VA program. The people involved with VA include:

- The VA Administrators:
  - FHWA
  - Headquarters VA Program
  - District/Region VA Coordinators

- Study Sponsors and Key Decision-makers
  - Program/Project Managers
  - Executive Management/Decision Makers
  - Study Stakeholders/Community Representatives
  - Local Agencies

- The VA Study Team
  - VA Team Leaders/Facilitators
  - Full-time VA Team Members
  - Part-time VA Team Members Participants
  - Technical Reviewers

Value Analysis Administrators

Federal Highway Administration

The FHWA Value Engineering Coordinator of the California Division, in cooperation with the Value Engineering Office in Washington D.C., supports Caltrans' Value Analysis Program by:

1. Providing guidance and direction on all value analysis/value engineering federal legislation related to transportation.
2. Ensuring compliance with the federal legislation and subsequent rulings relevant to VE/VA.
3. Reporting Caltrans' VA study results to the FHWA Value Engineering Office in Washington D.C.
4. Participating in the selection and acceptance of VA study recommendations.
5. Participating in the nomination, selection and presentation of annual VA awards.
6. Recruiting local FHWA employees to serve as VA team members.
7. Participating with the VA Program on important activities such as an annual district value analysis coordinator's meeting, value analysis conferences, and meetings with Caltrans management to discuss the role and future of the Value Analysis Program.

Headquarters Value Analysis Program

The Value Analysis Program is located within the Division of Design in Headquarters. The FHWA has delegated the authority to maintain the VA Program within Caltrans. Following are responsibilities of Caltrans' VA Program:

1. Assuring compliance with the federal VE/VA requirements.
2. Preparing and submitting annual reports to FHWA and Caltrans management.
3. Reporting statewide results of CRIPs to the FHWA in cooperation with the Headquarters Division of Construction.
4. Setting policy and procedures for the VA program.
5. Updating VA guidance materials and reference manuals.
6. Forecasting VA demand to ensure adequate resources.
7. Developing, coordinating and monitoring the statewide annual VA Program including fiscal management of the VA Program allocation for consultant services.
8. Maintaining VA consultant service contracts.
9. Provide VA training opportunities to Caltrans.
10. Coordinating Headquarters sponsored VA studies.
11. Supporting and encouraging the development of expertise to ensure successful VA studies.
12. Assessing and sharing VA best practices and "lessons learned".

13. Monitoring VA studies to assure adherence to the VA methodology.
14. Marketing VA results and recognizing accomplishments with VA awards.
15. Participating on the American Association of State Highway and Transportation Officials (AASHTO) Value Engineering Sub-committee (optional).

District/Region Value Analysis Coordinators

Each district or region must have a VA coordinator. The coordinator's function is to assure the proper application of VA policies and procedures. The coordinator consults with VA study sponsors and key decision-makers to identify improvement opportunities, scope, schedule, ideal team member candidates and study logistics, including meeting locations, study field trips and data collection. The coordinator also monitors and reports district VA studies to district management and to the Headquarters Value Analysis Program. The following lists the duties of the district VA coordinator:

1. Coordinate with Headquarters VA Program on all VA activities.
2. Coordinate the development of the district's annual VA program. This includes:
   - Working with district project managers and functional managers to identify project (voluntary and federally mandated), product and process studies.
   - Obtaining the District Director's approval for the annual VA program.
   - Updating the program over the duration of the year as needed.
3. Manage the district or region VA program to identify and check the availability of qualified team leaders and experienced team members to participate on the studies.
4. Ensure VA studies are conducted in accordance with Caltrans VA policies and approved procedures by performing the following duties:
   - For consultant-led studies, the coordinator will write and submit task orders to request consultant services under executed VA service contracts. Task orders must be written after being in consultation with the project manager, key functional units and key stakeholders.
   - Assist Headquarters VA Program to manage the yearly allocation of VA funds and types of funds provided to that district.
   - Schedule study dates including due dates for key deliverables and secure meeting room location(s) for the study meeting dates.
   - Notify study participants of the study dates, agenda and location.
   - Ensure that the VA team leader and team have adequate background data to generate sound assumptions and analysis.
   - Monitor study activities to assure adherence to the standards as defined in the VA manuals (auditing of study workshops).

- Ensure VA study preparation activities are completed, including follow-up on implementation results.

5. Maintain hard copies and electronic files of all completed VA study reports.
6. Advocate the merits of VA by reporting/marketing study results and participant contributions through the FHWA, American Association of State Highway and Transportation Officials and Caltrans VE/VA awards programs and other recognition effort.
7. Support Headquarters in monitoring legislative compliance, including audits and special report requests.
8. Assist Headquarters VA Program on assessing the cost and return on investment of the districts' or regions' VA studies.

Sponsors and Key Decision Makers

A. Project Sponsors

Project sponsors serve as project advocates. They secure funding for the preparation and completion of activities at the project team and functional level to ensure compliance with Caltrans policies, standards and practices including VA.

B. Program/Project Managers

Generally district program managers, corridor managers, and/or project managers are the primary sponsor for VA studies and help to ensure a successful study they are responsible for by:

1. Identifying highway projects to be value analyzed.
2. Ensuring VA studies are conducted on projects needing to comply with the federal VA law.
3. Providing adequate resources for the required and/or desired VA study into the project work plan budget and schedule.
4. Ensuring legislative compliance when Caltrans provides design oversight services for all projects on the Federal-aid system.
5. Identify the need for a VA study on locally funded projects.
6. Initiate a cooperative agreement as early as possible in the project development stage prior to incurring any costs and/or commitment of personnel resources.
7. Working with the coordinator to develop the VA study charter to outline the study's scope, objectives, participants and schedule.
8. Helping the coordinator recruit the most qualified VA team members; this may include sub-consultant experts, who can work directly with other multi-disciplined team members on various project issues.
9. Resolving the implementation dispositions of VA alternatives (accept, accept with modification(s), conditionally accept, or reject).

10. Ensuring legislative compliance by implementing all accepted alternatives into the project.

C. Executive Management/Decision Makers

Throughout the study duration, all relevant decision-makers should be involved, particularly for study preparation, the initial study kick-off meeting, team VA presentation and post study review activities. Having key decision-makers actively engaged and providing input to the VA team provides the necessary interaction to ensure that the VA study results in viable and beneficial VA recommendations. Their responsibilities include:

1. Support the project manager and/or district coordinator to recruit the best team members and study participants.
2. Review the study charter and attend the study kick-off meeting to make sure all-important issues and study objectives are adequately addressed.
3. Provide the implementation disposition and decision rationale for each VA team recommendation.
4. Attend the implementation meeting and approve each recommendation with an accept, conditionally accept or reject decision.
5. Provide input on conditionally accepted alternatives to the team leader. Identify responsibilities and time schedules needed to resolve conditions.
6. Recognition of VA contributions and team member acknowledgements.

D. Study Stakeholders/Community Representatives

Throughout the study activities, stakeholders and community representatives are encouraged to participate. The kick-off and implementation meetings are specifically designed to include these part time study members so their thoughts and concerns can be met in the study objectives and outcomes.

E. Local Agencies

Caltrans Headquarters Division of Local Assistance is responsible for assuring that a VA study has been performed on a local agency project. The local agency, in compliance with Caltrans' policy and procedures, must follow the VA requirement defined in this chapter. These responsibilities include:

1. Compliance with Caltrans' VA job plan on all projects as defined by the VA policy.
2. Provide written documentation of the VA study as defined by the Caltrans report guidance.

3. Provide the project manager and/or district VA coordinator with hard copy and electronic copy of the VA study report.
4. Define detailed information about the study costs, schedule, team leader, and requirements of the proposed VA study.
5. Provide qualified team members to participate in VA study when applicable.
6. Attend kick-off and implementation meeting on local projects.

The Value Analysis Study Team

There are many activities involved in a VA study. These activities are outlined in Article 7 – Value Analysis Process and Procedures. There are several categories of participants involved in a VA study. Each plays an important role in the success of the VA study. The participants include a team leader, team members (full and part time), stakeholders, and decision makers.

A. Value Analysis Team Leaders/Facilitators

The team leader generally is responsible for:

1. Meeting with project stakeholders, decision makers and team members in preparation of a VA study.
2. Leading the VA team through the VA methodology.
3. Documenting the VA alternatives to ensure clear, thorough communication of the VA team's concepts.
4. Preparing the VA study report, following the requirements outlined in the *Value Analysis Team Leader Guide*, in a timely fashion to the districts and Headquarters VA Program Manager.
5. Providing electronic and/or hard copies to all interested parties.
6. Ensuring the VA study is in compliance with Caltrans policy.
7. Performing a follow-up on the implementation plan.

B. Full-time Value Analysis Team Members

VA team members are recruited from Caltrans staff, government agencies and occasionally supplemented by consultants with desired technical expertise not readily available within Caltrans. External project stakeholders are encouraged to participate as team members. Studies must be performed using multi-disciplined teams of individuals open to changes to the current design of the project. To establish the team's authority, it is recommended that the district VA coordinator obtain a memorandum signed by an appropriate high-ranking district manager, appointing team members to the study.

The experience and knowledge of the team members must match the complexity of the project being studied. Team members must be capable of working within a team environment, be willing to express themselves and be willing to listen to the ideas of others. Specifically, the VA team includes specialists who can develop and determine the technical, economic, political, and environmental feasibility of alternatives included in the project scope. Headquarters' staff from the following should be recruited as needed:

- Division of Design
  - Project Delivery Coordinators
- Division of Traffic Operations
  - District Traffic Liaison
- Division of Environmental Analysis
  - District Coordinator
- Division of Transportation Planning
- Division of Maintenance
- Division of Research and Innovation

VA teams typically consist of five to ten members, including the team leader. Teams within this range are effective, as they are large enough to represent the project's key technical areas of expertise, while small enough to achieve the desired cohesiveness and synergy. Teams of this size also demonstrate efficient use of resources for project studies.

Full-time VA team members are expected to have:

1. Competency in their field of expertise.
2. Time to devote to the entire duration of the VA study. Team members (or their supervisors) are not allowed to send a delegate to participate in their absence (unless illness or an emergency prevents the team member's continued participation).
3. Preparation time to review the project prior to the study.
4. Skills and the mindset to complete all necessary VA study tasks, including writing VA proposals and estimating costs.
5. An open mind, a belief that there is always room for improvement and willingness to share and debate the pros and cons of VA alternatives.
6. Post study workshop time to review and comment on the preliminary VA study report and participate on the VA study implementation meeting.

C. Part-time Value Analysis Team Members (Caltrans/Consultants)

Part-time VA team members are an essential part of the VA study. These part time members include technical reviewers, Caltrans or consultant technical experts, project managers, project development team (PDT) members, community representatives, project stakeholders, and project decision makers.

Part-time team members are:

1. Not required to attend all of the VA study activities.
2. May include local agencies or community representatives (or any interested party).
3. Should be invited to the stakeholder issues discussion on the first day of the study (kick-off meeting).
4. Should serve as technical advisors and/or reviewers.
5. Should provide comments and/or feedback during the study. Especially when reviewing preliminary or draft documents.
6. May participate during the brainstorming phase of the study.

D. Technical Reviewers

The project manager identifies technical reviewers, responsible to review and comment on the technical viability of the VA alternatives and to identify any issues that need to be addressed. Comments should be well documented and clearly cited with advantages and disadvantages. Technical reviewers do not make decisions regarding the VA alternative. Technical reviewers should include individuals from functional units reflected in the PDT and relevant Headquarters advisors.

Figure 19-2 Workshop Responsibilities summarizes the roles and responsibilities for the individual activities involved in a study/workshop.

Figure 19-2 Workshop Responsibilities

Workshop Responsibilities	Study Sponsor(s) or Project Manager	District VA Coordinator	Headquarters VA	Team Leader	Team Member	Stakeholders/ Technical Advisors	Executive Management Decision-makers
Pre-VA Study							
Ensure legislative compliance (including local projects)	X	X	X				
Address VA in project study reports and project reports per California Transportation Commission requirement	X						
Identify projects to be value analyzed	X	X	X				X
Ensure adequate resources are available for study	X	X	X	X			
Determine study scope, objectives and participants	X	X	X				X
Determine study schedule	X	X		X			
Recruit ideal full-time team members and part-time participants as well as sub-consultant experts if needed	X	X					X
Develop and approve study charter	X	X					
Participate in pre-study planning meeting	X	X		X			
Gather and disseminate adequate data to generate sound assumptions and analysis	X	X		X			
VA Study							
Attend and participate in study kick-off meeting discussion	X	X		X	X	X	X
Provide phone/email data and be available to support the team to answer questions	X	X		X	X	X	X
Participate in field review	X	X		X	X		
Attend mid-point review (if scheduled)	X	X		X	X	X	X
Develop formal VA team alternatives with cost estimates, and sketches (if applicable)				X	X		
Rate and compare performance between VA alternatives and to baseline/existing option				X	X		
Review and validate team assumptions, findings, calculations	X					X	X
Determine/invite participants to the VA team's presentation and preliminary report reviewers	X	X					
Attend VA team presentation meeting	X	X		X	X	X	X
If needed, identify action items for additional analysis	X	X		X		X	X
Set post workshop schedule for preliminary report review and the implementation meeting	X	X					

Workshop Responsibilities	Study Sponsor(s) or Project Manager	District VA Coordinator	Headquarters VA	Team Leader	Team Member	Stakeholders/ Technical Advisors	Executive Management Decision-makers
Post VA Study							
Review report and provide specifics comments or requests for clarification	X	X			X	X	X
Participate in the implementation meeting	X	X		X	X	X	X
Provide rationale for acceptance, conditional acceptance or rejection of VA alternatives	X						X
Distribute final study reports		X		X			
Acknowledge VA participants' effort and contributions	X	X		X			X
Follow-up on conditionally accepted alternatives	X	X		X			
Maintain hard copies and electronic files of all completed VA study reports	X	X	X	X			

ARTICLE 7 Value Analysis Process and Procedures

Caltrans has adopted an eight-step VA study procedure following the FHWA's Value Engineering Policy (Order 1311.1A):

1. Preparation
2. Information
3. Function Analysis
4. Speculation
5. Evaluation
6. Development
7. Presentation
8. Implementation

Many activities are involved in each step of the process as can be seen in Figure 19-3 Value Analysis Study Activity Chart. Basically, the job plan can be separated into four major categories: preparation, VA study workshop, disposition of alternatives, and reporting.

The VA study workshop is conducted in two phases that are ideally conducted in two different work weeks. The first workshop is for the information, function analysis,

speculation and evaluation phase of the study. The second workshop includes developing the alternatives and presenting them to the stakeholders of the project. Once the alternatives have been presented, the preliminary report is written and distributed for comments. The disposition of alternatives begins by gathering the comments, and scheduling an implementation meeting with the stakeholders and decision makers to discuss the implementation of the approved alternatives into the project. Upon completion, a final report will be prepared discussing the results of the study.

Figures 19-3 Value Analysis Job Plan and Study Activity Chart and 19-4 Value Analysis Job Plan Participation Chart outline all the VA study activities and the people involved in the VA study, respectively. Also, refer to Figure 19-2 Workshop Responsibilities for clarification.

Study Schedule

Typically, five to seven days (40 to 70 hours) of meeting time are required to conduct a VA study for a project. The study results should be finalized within eight to ten weeks of the start of the study.

During study preparation, the project manager, the district VA coordinator and team leader customize the typical VA study work plan for the project and determine the approximate number of hours to be spent. It becomes the responsibility of the team leader to meet this schedule.

A typical model for the Caltrans VA highway study is to conduct the workshop in two three-day sessions of eight hours each day, separated by no more than one week. The disposition of alternatives is conducted three to five weeks after the conclusion of the workshop to finalize the implementation disposition of the VA alternatives. This time is necessary to permit completion and distribution of the preliminary report by the team leader, and to review and comment on the VA alternatives by the PDT, technical reviewers and stakeholders. The VA study report is due within two weeks of the completion of alternative disposition determination.

Alternative Study Schedule

In some cases, it is desired to perform a shortened study of three to five days for the workshop. There is an exception process to receive approval for a shortened study. The district VA coordinator, in conjunction with the project manager and team leader, may submit a modified job plan proposal to the Headquarters' VA Program Manager.

The form is found on the VA website at:
http://www.dot.ca.gov/hq/oppd/value/valueanalysis.htm

A description of the project along with a proposed schedule (i.e. job plan) must be submitted to Headquarters prior to approval. Acceptance of the modified job plan will be based on study scope, complexity of the project, project schedule, and duration of the study. Decisions will be made on a project-by-project basis and may require FHWA approval. One-day studies are not acceptable as valid VA studies. An acceptable job plan cannot be accomplished in one-day.

Figure 19-3 Value Analysis Job Plan and Study Activity Chart

PREPARATION	**1 INITIATE STUDY** ➢ Identify study project ➢ Identify study roles and responsibilities ➢ Define study goals ➢ Select team leader ➢ Prepare draft study charter	**2 ORGANIZE STUDY** ➢ Conduct pre-study meeting ➢ Select team members ➢ Identify stakeholders, decision-makers, and technical reviewers ➢ Identify data collection ➢ Select study dates ➢ Determine study logistics ➢ Update VA study charter ➢ Identify and define performance requirements	**3 PREPARE DATA** ➢ Collect and distribute data ➢ Develop construction cost models ➢ Develop highway user benefit/life-cycle cost model (if required)	
VA STUDY WORKSHOP	**4 INFORM TEAM** ➢ Review study activities and confirm reviewers ➢ Present design concept ➢ Present stakeholders' interests ➢ Review project issues and objectives ➢ Discuss design exceptions ➢ Rate performance of baseline concept ➢ Visit project site	**5 ANALYZE FUNCTIONS** ➢ Analyze project data ➢ Expand project functions ➢ Prepare function analysis system technique diagram ➢ Determine functional cost drivers and performance ➢ Assess risk (if needed)	**6 CREATE IDEAS** ➢ Focus on functions ➢ List all ideas ➢ Apply creativity and innovation techniques (group and individual)	**7 EVALUATE IDEAS** ➢ Apply key performance attributes to rate idea ➢ List advantages and disadvantages ➢ Consider cost impacts ➢ Rank all ideas ➢ Assign alternatives for development
	8 DEVELOP ALTERNATIVES ➢ Develop alternative concepts ➢ Prepare sketches and calculations ➢ Measure performance ➢ Estimate costs, life-cycle cost benefits/costs	**9 CRITIQUE ALTERNATIVES** ➢ VA alternatives technical review ➢ VA alternatives team consensus review ➢ Identify mutually exclusive groups of alternatives ➢ Identify VA strategies ➢ Validate performance	**10 PRESENT ALTERNATIVES*** ➢ Present findings ➢ Document feedback ➢ Confirm pending reviews **Interim presentation of study findings*	

DETERMINE DISPOSITION	**11 DOCUMENT VA STUDY** ➢ Document process and study findings ➢ Develop and distribute VA study summary report - preliminary findings and VA study preliminary report ➢ Distribute electronic report to Headquarters VA Program	**12 ASSESS ALTERNATIVES**** ➢ Review study summary report ➢ Assess alternatives for project acceptance ➢ Prepare draft implementation dispositions ***Activities performed by project development team, technical reviewers, and stakeholders*	**13 RESOLVE ALTERNATIVES** ➢ Review implementation dispositions ➢ Conduct implementation meeting ➢ Resolve implementation actions with decision-makers and stakeholders ➢ Document VA alternative disposition ➢ Develop implementation action memo (if conditionally accepted alternatives remain)	**14 FINALIZE ALTERNATIVES** ➢ VA team leader follow up with the project manager on conditionally accepted alternatives ➢ Resolve conditionally accepted alternatives ➢ Develop implementation plan with project manager ➢ Design manager sign off on VA implementation plan authorization ➢ Final presentation of study results (if needed)

REPORTING RESULTS	**15 PUBLISH RESULTS** ➢ Document process and study results ➢ Incorporate all comments and implementation plan ➢ Distribute final VA study report in portable document format (.pdf) ➢ Submit VA study summary report and two-page summary to Headquarters VA Program for FHWA auditing ➢ Include implementation plan authorization in final VA study report

Figure 19-4 Value Analysis Job Plan Participation Chart

VA Activity Preparation	District VA Coordinator	Project Manager	Project Development Team	Technical Reviewers	Headquarters VA Program	External Stakeholders	Executive Management	Team Leader	VA Team
INITIATE STUDY									
➢ Identify study project	X	X							
➢ Identify study roles and responsibilities	X	X			X				
➢ Define study goals	X	X							
➢ Select team leader	X	X			X				
ORGANIZE STUDY									
➢ Conduct preparation meeting	X	X	X					X	
➢ Select team members and advisors	X	X	X					X	
➢ Identify stakeholders, decision-makers and technical reviewers		X							
➢ Identify data collection	X	X	X					X	X
➢ Select study dates	X	X	X					X	X
➢ Determine study logistics	X							X	
PREPARE DATA									
➢ Collect and distribute data	X	X	X					X	
➢ Develop construction cost models								X	X
➢ Develop highway user benefit life-cycle cost model								X	X

VA Activity Workshop	District VA Coordinator	Project Manager	Project Development Team	Technical Reviewers	Headquarters VA Program	External Stakeholders	Executive Management	Team Leader	VA Team
INFORM TEAM									
➢ Review study activities/confirm reviewers	X	X							
➢ Present design concept		X	X						
➢ Present stakeholders' interests		X				X			
➢ Review project documents	X	X	X	X		X		X	X
➢ Review project issues and objectives		X	X					X	X
➢ Develop performance criteria		X	X	X		X		X	X
➢ Visit project site	X	X	X			X		X	X
ANALYZE FUNCTIONS									
➢ Analyze project data								X	X
➢ Identify project functions								X	X

➢ Prepare function analysis system technique diagram								X	X
➢ Determine functional/cost and functional/performance relationship								X	X
CREATE IDEAS									
➢ Focus on functions								X	X
➢ List all ideas								X	X
➢ Use group brainstorming								X	X
➢ Use individual brainstorming								X	X
EVALUATE IDEAS									
➢ Apply key evaluative criteria								X	X
➢ Rate each idea								X	X
➢ List advantages and disadvantages								X	X
➢ Rank all ideas								X	X
➢ Assign alternatives for development								X	X

VA Activity Workshop	**District VA Coordinator**	**Project Manager**	**Project Development Team**	**Technical Reviewers**	**Headquarters VA Program**	**External Stakeholders**	**Executive Management**	**Team Leader**	**VA Team**
DEVELOP ALTERNATIVES									
➢ Develop alternative concepts								X	X
➢ Prepare sketches and calculations								X	X
➢ Estimate costs, life-cycle cost benefits/costs								X	X
➢ Measure performance								X	X
➢ Edit alternatives								X	X
CRITIQUE ALTERNATIVES									
➢ Review alternatives for team consensus								X	X
➢ Review alternatives for technical viability				X				X	X
➢ Validate performance								X	X
➢ Review pending study activities/confirm reviewers	X	X		X				X	X
➢ Edit alternatives and incorporate comments								X	X
PRESENT ALTERNATIVES									
➢ Present findings								X	X
➢ Document feedback								X	X
➢ Confirm pending technical reviews		X	X	X		X	X		
➢ Prepare preliminary report								X	

VA Activity Disposition and Reporting	District VA Coordinator	Project Manager	Project Development Team	Technical Reviewers	Headquarters VA Program	External Stakeholders	Executive Management	Team Leader	VA Team
ASSESS ALTERNATIVES									
➢ Review preliminary VA study report		X	X	X		X	X		
➢ Assess alternatives for project acceptance		X	X	X		X	X		
➢ Prepare draft implementation dispositions		X	X	X		X	X		
RESOLVE ALTERNATIVES									
➢ Review implementation dispositions	X							X	X
➢ Resolve implementation actions decision-makers and stakeholders	X	X	X	X		X	X	X	X
➢ Edit alternatives								X	X
➢ Revisit rejected alternatives, if needed								X	X
PRESENT RESULTS									
➢ Present results of study	X	X	X	X		X	X	X	X
➢ Reach final consensus and summarize study results on implemented alternatives	X	X	X	X		X	X	X	X
PUBLISH RESULTS									
➢ Document process and results								X	
➢ Incorporate all comments and dispositions								X	
➢ Distribute VA study report								X	
➢ Distribute electronic version to Headquarters VA Program								X	
CLOSE-OUT STUDY (if conditionally accepted alternatives exist)									
➢ Resolve conditionally accepted alternatives								X	
➢ Finalize VA study summary report								X	
➢ Finalize performance measures								X	
➢ Finalize VA study report executive summary and provide electronically to Headquarters								X	

Value Analysis Study Report

The objective of a VA study is to develop a proposal to maximize performance while minimizing cost. The VA study report contains all of the documentation needed to communicate the findings of the VA study and facilitate implementation of the VA alternatives. The team leader is primarily responsible for gathering the documentation generated by the study team and compiling it systematically into a report.

Two reports, a preliminary and final, are generated for every study. The purpose of the preliminary report is to provide documentation of the VA alternatives to the reviewers and team members in order to get their response to the viability and acceptability of the alternatives. The preliminary report is typically prepared and distributed within two or three weeks after the VA study. The final report is prepared after the implementation meeting to document the decision maker's comments, implementation plans, and decisions. The final report serves as the final documentation of the VA study.

Each VA study is summarized and documented using the *Value Analysis Team Leader Guide*.

The VA Study Report includes the following sections:

- Table of Content (P, F)
- Distribution List (P, F)
- Executive Summary (P, F)
- VA Alternatives (P, F)
- Project Analysis (F)
- Project Description (P, F)
- Idea Evaluations (P, F)
- VA Process (P, F)

P-Preliminary, F-Final

Value Analysis Alternative and Numbering Convention

Each alternative consists of a summary of the original concept, a description of the suggested change, a listing of its advantages and disadvantages, a cost comparison, change in performance, and a brief narrative comparing the original design with the

alternative. Sketches, calculations, and performance measure ratings are also presented.

Many alternatives developed by the team have several variations. Alternatives are numbered sequentially (1.0, 2.0, 3.0). The ".0" indicates this alternative does not have any competing ideas. When several competing ideas are developed and only one may be implemented, the same number is used with decimal designators (3.1, 3.2, 3.3) for the competing alternatives. The VA alternative number is independent of the original idea number.

Value Analysis Sets

The VA team establishes VA sets as their "best value" solutions, based on improved performance, likelihood of implementation, least community impact, cost savings, or any combination of criteria. A VA set may contain one or more alternatives, and each set is typically mutually exclusive of other sets (i.e., implementing VA Set 1 precludes implementation of VA Sets 2 and 3). VA sets are selected alternatives combined from mutually exclusive groups that can compete in whole, or in part, against the original design concept. This requires additional performance rating and totaling of costs for the sets.

Figure 19-5 Value Analysis Sets Example illustrates how a VA team might create two VA sets for a project. Both sets offer the potential to significantly reduce excavation work; simplify construction; reduce horizontal curve radii, thereby improving sight distance; and reduce the number of intersections and associated turning movements on the highway. Both sets suggest reduction in design speed in selected areas of the project, from 50 mph to 45 mph, or from 50 mph to 40 mph. Either of these two alternatives will give the designer greater flexibility to design around obstructions (including utilities) and existing topography. The reduction in design speed is consistent with the highway use and designation.

Figure 19-5 Value Analysis Sets Example

SUMMARY OF VA ALTERNATIVES			
No.	Description	Cost Savings Initial / Highway User	Change in Value
1.1	Relocate / Consolidate / Improve At-Grade Intersections	$885,000	+3%
1.2	Realign SR 64 Southbound and Reroute Solitude Road	$16,183,000	+3%
1.3	Eliminate Wiley Drive Connection	$1,700,000	+8%

2.1	Design Median Width for Projected Traffic Volumes	$5,097,000	0%
2.2	Reduce Solitude Grade Median to 7 Meters, with Concrete Barrier for ~1,000 Meters	$1,814,000	0%
3.0	Steepen Slopes to 1.5:1	$6,420,000	+5%
4.1	Lower Design Speed to 45 mph in Selected Areas	$6,409,000	+3%
4.2	Lower Design Speed to 40 mph in Specific Areas	$9,853,000	+1%
5.0	Go Around the Oil Refinery; Realign Roadway to Intersect Utilities at 90º	$1,011,000	+3%
6.1	Relocate 14/64 Interchange Beyond Wetlands	$400,000	+2%
6.2	Design Simple Flyover at 14/64 Interchange	$4,006,000	+4%
7.0	Eliminate Asphalt Treated Permeable Base (ATPB) and Edge Drains	$3,170,000	0%
8.0	Undercrossing at Olive Hill Road with Interchange	($1,982,000) $34,146,000	+15%

SUMMARY OF VA SETS

Set No.	Description	Cost Savings Initial / Highway User	Change in Performance	Change in Value
1	Use 40 mph Design Speed in Selected Areas (1.2, 2.1, 3.0, 4.1, 5.0, 6.2, 7.0, 8.0)	($1,982,000) $42,296,000	26%	52%
2	Use 45 mph Design Speed in Selected Areas (1.2, 2.1, 3.0, 4.2, 5.0, 6.2, 7.0, 8.0)	($1,982,000) $45,740,000	24%	52%

Value Analysis Performance Criteria

Performance criteria were established solely to better understand the advantages and disadvantages between competing alternatives. A consensus-driven approach is used to determine the relative magnitude of each performance objective by assigning a numeric weight. Interpreting the performance expectations into a numeric abstraction permits an unbiased assessment of value.

Caltrans has increased the significance of performance in determining the overall value score by using the "Paired Comparison" method to obtain the team's consensus on the relative importance of each performance attribute and to assign a numeric value for each attribute. Using a performance criteria matrix, the VA team assigns numeric weights to the identified performance attributes by comparing the relative importance of each as it pertains to the project, product or process being studied. Figure 19-6 Performance Criteria Matrix Example illustrates how the weighted percentage score is assigned to each performance attribute in the project. The score is calculated by adding all the compared importance attributes and dividing by the total number of comparisons, i.e. five A's divided by 21 equals 24%.

Figure 19-6 Performance Criteria Matrix Example

PERFORMANCE CRITERIA MATRIX ***Example Project***								**Caltrans**	
								TOTAL	**%**
Mainline Traffic Operations	**A**	b	a	a	a	a	a	5.0	24%
Highway User Safety		**B**	b	b	b	b	b	6.0	29%
Access			**C**	c	c	c	c	4.0	19%
Local Traffic Operations				**D**	d	f	d	2.0	10%
Constructibility					**E**	f	e/g	0.5	2%
Environmental Impacts						**F**	f	3.0	14%
Right-of-Way Impacts							**G**	0.5	2%
a More Important									
a/b Equal Importance								21.0	100%

Example

Once the weighted performance attributes are calculated, a comparison analysis of VA alternatives is focused on the ability and extent of each alternative to satisfy a performance attribute. The VA team assesses each VA alternative to determine the degree each causes beneficial or adverse impacts to the performance attributes. The team agrees on a qualitative value based on a scale of one to ten, ten being the highest potential benefit. When comparing against the baseline alternative, the value is set to five.

Figure 19-7 Performance Rating Matrix is used to calculate the value index of each alternative. If an attribute, such as mainline traffic operations, is assigned a weighted value of 24 points (24%) and the alternative is evaluated to have a performance rating of eight points then the alternative's performance score for that attribute is 192 points (criteria weighted value multiplied by performance rating). Adding the points for all the performance attributes, creates a performance score for each VA alternative (e.g., 677 in Figure 19-7). A value index score is calculated by dividing the performance score by cost (e.g., 677 divided by 235.6 (million) equals a 2.87 value index). This allows the team to present a value comparison between VA alternatives and the baseline design.

The difference between the score for the VA alternative, and the score for the project baseline concept, is expressed as a percentage of performance improvement or

degradation. The optimum result is to develop VA alternatives with the potential to increase performance at a decreased cost. Often, the VA study will result in a set of alternatives that either decrease cost, but with a slight degradation in performance or the opposite, performance significantly increases with a slight cost increase.

Figure 19-7 Performance Rating Matrix

PERFORMANCE RATING MATRIX - Original Concept

Example Project

Caltrans

Criteria	Criteria Weight	Concept	Performance Rating 1	2	3	4	5	6	7	8	9	10	Total Performance
Mainline Traffic Operations	24	No Build		2									48
		Original Concept								8			192
Highway User Safety	29	No Build				4							116
		Original Concept						6					174
Access	19	No Build			3								57
		Original Concept							7				133
Local Traffic Operations	10	No Build				4							40
		Original Concept							7				70
Constructability	2	No Build											N/A
		Original Concept							7				14
Environmental Impacts	14	No Build											N/A
		Original Concept						6					84
Right-of-Way Impacts	2	No Build											N/A
		Original Concept					5						10

OVERALL PERFORMANCE	Total Performance	% Perf. Improve.	Total Cost	Value Index (Performance / Cost)	% Value Improvement
Original Concept	677		235.6	2.87	

Example

ARTICLE 8 Value Analysis Study Charging Details

The VA study activities are resourced by two different funding sources. First, the Headquarters VA Program maintains several architectural and engineering contracts with consultant team leaders on board to perform Caltrans VA studies. Team leaders are certified value specialists with specific expertise not employed within Caltrans. Included in these contracts are provisions for Caltrans to hire consultants with specific expertise and/or experiences. The second source of funding is from the expenditure authorization (EA) of the project. Caltrans employee participation in the study will be charged to the EA of the project.

Typical Cost

Typical VA studies include a pre-study meeting, six-day workshop, report writing, report review and comment period, and an implementation meeting. These activities generally take about 80 hours of work spread over a six-week period for each full-time team member. With typical studies having six to eight team members, the project manager should include about 500 to1000 hours for VA activities in the project work plan. The project manager should also consider including 80 hours for the district VA coordinator.

Consultant team leader costs, including administrative fees, quality control, and traveling expenses, are allocated though architectural and engineering contracts and are administered by the Headquarters VA Program. The costs for typical studies range from $30,000 to $40,000.

Although the cost of the study can be substantial, the results from each study are on average returning an 80:1 savings on investment. For each dollar spent on the study, Caltrans is realizing an eighty-dollar savings in initial cost and/or life-cycle cost on the project.

Typical Charging

Caltrans' team members should be charging their time directly to the project number. VA activities are defined in the work breakdown structure (WBS) for each phase of the project. An example of a typical project study in District 6 during the PA&ED phase is as follows:

Unit	Project	Phase	Reporting Code	Sub Object	Activity
1234	0600001234	1	6VAXXXX	160	1020

Team members are encouraged to use a reporting code to identify VA activities. The VA program uses the following reporting code:

6VAXXXX - where XXXX is the task order number of the VA study

Sub Object	**Activity**
150 = Develop Project Initiation Document (PID)	1010
160 = Perform Preliminary Engineering Studies and Draft Project Report	1020
185 = Prepare Base Maps and Plan Sheets during PS&E Development	1520

Caltrans policy requires all on-call architectural and engineering contract expenditures to be charged against the specific project in which the work is being done. Team leader expenses are encumbered directly to the project number from the on-call contract administered by Headquarters VA Program. Task orders, expenses and billing for consultant services related to VA activities are the responsibility of the Headquarters VA Program.

ARTICLE 9 Value Analysis Program Reporting

The Headquarters VA Program's results are reported to the FHWA and Caltrans management in an annual report prepared in October by the Headquarters VA Program Manager. These reports describe results of the VA studies performed over the federal fiscal year (ending September 30). The report is used to calculate the return on investment of the VA Program by comparing the cost of the study to the amount of savings.

The Headquarters VA Program also reports to FHWA on Caltrans cost reduction incentive proposals, the method to approve construction strategies developed by the

construction contractor to reduce project cost. Please refer to the Caltrans' Construction Manual for more details about cost reduction incentive proposals. Most other states use the name value engineering cost proposals for similar programs.

The FHWA annual report includes:

- Number of VA Studies
- Cost of the VA Studies
- Number of Proposed Alternatives
- Number of Accepted Alternatives
- Value of Proposed Savings
- Value of Accepted Savings
- Total Cost of Projects Being Studied
- Number of Construction Value Engineering Cost Proposals
- Amount of Value Engineering Cost Proposals Savings
- Number of Employees Trained in VA

The FHWA annual report from previous years can be found on the web at: http://www.dot.ca.gov/hq/oppd/value/history.htm

CHAPTER 20 – Project Development Cost Estimates

Table of Contents

CHAPTER 20 – Project Development Cost Estimates 20-3
SECTION 1 Project Cost Estimating 20-3
ARTICLE 1 General 20-3
Reference Information 20-3
Importance of Quality Cost Estimates 20-3
Cost Estimate Categories 20-4
Consistent and Comprehensive Methodology 20-4
Cost Estimates are Not Static 20-4
ARTICLE 2 Policies 20-4
Goal and Objective 20-4
Project Cost Awareness 20-5
Standard Formats 20-5
Accountability 20-5
Monitoring and Updating Cost Estimates 20-5
ARTICLE 3 Current Project Cost Estimate 20-6
ARTICLE 4 Responsibilities 20-6
Project Engineer 20-6
Project Manager 20-7
Headquarters Division of Engineering Services-Structure Design 20-7
District Right-of-way 20-7
District Project Management 20-7
District Director 20-7
Headquarters Division of Design 20-8
Headquarters Division of Project Management-
Project Delivery & Workload Development 20-8
Headquarters Management 20-8
ARTICLE 5 Coordination with Other Functional Units and Agencies 20-9
Consult Others 20-9
Structure and Right-of-way Cost Estimates 20-9
Cooperative Projects 20-9
Intercounty Projects 20-9
Federal-aid Projects 20-10
SECTION 2 Project Planning Cost Estimates 20-11
ARTICLE 1 General 20-11

ARTICLE 2 Project Feasibility Cost Estimate 20-11
Initial Cost Estimate 20-11
Required Level of Detail 20-11
Scoping for Project Feasibility Cost Estimates 20-12
High Cost Items 20-12
Contingencies 20-12
ARTICLE 3 Project Initiation Cost Estimate 20-13
Required Level of Detail 20-13
Appropriate Mapping 20-13
Additional Information 20-13
Basis for Programming 20-13
Use Most Up-To-Date Cost Estimate 20-14
Base for Future Planning Cost Estimates 20-14
Contingencies 20-14
ARTICLE 4 Draft Project Report Cost Estimate 20-14
Required Level of Detail 20-14
Cost Estimate Changes 20-14
Contingencies 20-14
ARTICLE 5 Project Report Cost Estimate 20-15
Required Level of Detail 20-15
Cost Estimate Changes and Approval 20-15
Contingencies 20-15
SECTION 3 Project Design Cost Estimates 20-16
ARTICLE 1 General 20-16
Design Cost Estimates 20-16
Construction Costs Only 20-16
Total Capital Outlay Costs 20-16
ARTICLE 2 Transitioning from Project Planning to
Project Design Cost Estimates 20-17
Identify Contract Items of Work 20-17
Project Design Cost Estimate Components 20-17
ARTICLE 3 Basic Engineering Estimating System 20-17
General 20-17
Highway, Bridge, and Combined Cost Estimate Files 20-18
Common Highway and Bridge Items 20-18
ARTICLE 4 Preliminary Engineer's Cost Estimate 20-20
General 20-20
Portion of Capital Outlay Cost 20-20
Contingencies 20-20
ARTICLE 5 Final Engineer's Cost Estimate 20-21
General 20-21
Certification of Final Engineer's Cost Estimate 20-21
Locking Files 20-21
Comparison with Contractor Bids Received 20-21
Contingencies 20-22

CHAPTER 20 – Project Development Cost Estimates

SECTION 1 Project Cost Estimating

ARTICLE 1 General

Reference Information

Some of the references found in this chapter have hyperlinks that connect to Caltrans intranet pages which are not displayable to the general public. Until such time that the specific reference becomes available on the internet, the user will have to contact their district liaison, Caltrans project manager, or the appropriate Headquarters division to inquire about the availability of the reference.

Importance of Quality Cost Estimates

Reliable cost estimates are necessary for responsible fiscal management at every stage of the project. Unreliable cost estimates cause significant problems for Caltrans' programming and budgeting as well as local and regional planning. Unreliable cost estimates may also lead to staffing and budgeting decisions that use resources incorrectly or inefficiently. These problems, in turn, affect Caltrans' relationships with the California Transportation Commission (CTC), the California Legislature, local and regional agencies, and the public, and results in loss of credibility.

The term "project cost estimate", as used during the project development process, includes all capital outlay costs, including right-of-way, structures and landscaping, but does not normally include capital outlay support costs. Project cost estimates should never be artificially reduced to stay within the funding limits, nor should they be reduced to make more project funding available for the district. Likewise, project cost estimates should not be artificially raised beyond the contingency percentages provided in this chapter unless the increase is adequately justified.

Cost Estimate Categories

There are two categories of project cost estimates: project planning cost estimates and project design cost estimates. Project planning cost estimates are used for project justification, programming, analysis of alternatives, and approval. Project design cost estimates are used to summarize the cost of a project's contract items of work and are used for the bid item list in the construction contract documents.

Consistent and Comprehensive Methodology

Estimating cost is not an exact science. However, Caltrans must strive for reliable project cost estimates, so that projects can be delivered within budget. Caltrans requires that project cost estimates be prepared using a consistent and comprehensive methodology. Careful attention is needed to ensure a quality estimate. The cost estimator needs to research costs, compare costs, and use professional judgment to prepare a quality cost estimate. Consideration of project scope, schedule, and level of design details is required to develop accurate cost estimates.

Cost Estimates are Not Static

Cost estimates, in a sense, are never completed. They must be reviewed continually to keep them current. The project engineer (PE) is responsible for keeping the project cost estimates updated throughout the project development process, while the project manager (PM) is responsible for reviewing and approving all project cost estimates.

ARTICLE 2 Policies

Goal and Objective

Caltrans' goal is to avoid project cost overrun and also avoid excessive cost underrun. Cost overrun leads to shortage of funding to deliver the project, while cost underrun leaves unused funds that could have been used to deliver other important projects. The objective is to produce reliable construction cost estimates throughout project planning, development, and delivery process. It is important to identify costly unforeseen items of work before the project has been programmed to avoid delays and/or cancelation of the project.

Project Cost Awareness

Project cost awareness and control must be practiced throughout the planning and design of projects. This begins by establishing realistic assumptions as to final concept, scope and cost as early in the life of the project as possible.

Standard Formats

Standard project estimating formats must be followed for all project cost estimates.

Project planning cost estimates must be prepared using the standard format available on the Headquarters Division of Design cost estimating website at: http://www.dot.ca.gov/hq/oppd/costest/costest.htm

Project design cost estimates must be prepared using the Basic Engineering Estimating System (BEES); information is available at: http://it.onramp.dot.ca.gov/information-about-bees

Accountability

District management and the project manager are to be directly involved and held accountable in estimating project costs, controlling costs and submitting changes to cost estimates for approval.

Monitoring and Updating Cost Estimates

All project cost estimates are to be monitored and maintained current. Following the initial estimate, the timing of updates is guided by the following factors:

- Annual updates – All cost estimates must be kept current and updated at least once a year. If nothing else has changed, the annual update should focus on the unit costs used for the various items in the estimate. An annual update is only necessary if the estimate is not updated for any of the following listed factors.
- Programming cycle – A current cost estimate is needed at the start of each programming cycle so that the next programming document reflects current cost estimates. Most programming documents are prepared on a two-year cycle. The escalated amount used in each programming document establishes a new base against which future cost changes are compared.
- Approval of project development reports – Project development reports authorizing a project to proceed further in the project development process require the development and inclusion of a project cost estimate.

- Significant changes in identified project costs – Another appropriate time to update the project cost estimate is when a project development workflow task supports the preparation of a more detailed cost estimate (that is, when a task involves an activity to review the project and create a cost estimate). For example, when a preliminary site investigation more clearly identifies contamination issues, or when a geotechnical design report clarifies sub-surface conditions.
- After Plans, Specifications, and Estimate (PS&E) – Final engineer's cost estimates that are more than three months old must be updated for projects that have achieved the Plans, Specifications, and Estimate milestone.

Changes to cost estimates for programmed projects require program change requests as described in and following the procedures in Chapter 6 – Project Cost, Scope, and Schedule Changes and the *Project Changes Handbook*.

ARTICLE 3 Current Project Cost Estimate

The current project cost estimate is the most recent project cost estimate available during either the planning phase or the design phase, regardless of whether it is approved as the "approved cost." It is adjusted from the date of the estimate to January 1 of the current State fiscal year.

Since the current project cost estimate is an estimate of the capital outlay costs, it includes right-of-way costs. Refer to Section 3, Article 1, for a discussion of the relationship of the right-of-way cost estimate to the project design cost estimate during the design phase of project development.

ARTICLE 4 Responsibilities

Project Engineer

The responsibilities include the following:

- Prepare, revise and update project cost estimates.
- For project cost estimates that have achieved the PS&E milestone, update final engineer's cost estimates that are more than three months old.
- Incorporate new or revised cost data from functional units in project cost estimates.
- Maintain a record of successive cost estimates for each project, including structure and right-of-way cost estimates, with documentation of the reasons for significant changes.

Project Manager

The responsibilities include the following:

- Review and approve all project cost estimates.
- Review and sign program change requests.

Headquarters Division of Engineering Services-Structure Design

The responsibilities include the following:

- Prepare, revise and update structure cost estimates.
- Promptly advise the project manager of the availability of the structure cost estimate or any significant changes to the estimate along with the reasons for the changes.

District Right-of-way

The responsibilities include the following:

- Prepare, revise, and update right-of-way cost estimates.
- Ensure that expended right-of-way cost is included or excluded in a consistent manner for cost comparison with earlier estimates.
- Review and sign program change requests (Deputy District Director).
- Promptly advise the project manager of the availability of the right-of-way cost estimates or any significant changes to the estimates along with the reasons for the changes.

District Project Management

The responsibilities include the following:

- Process program change requests.

District Director

The responsibilities include the following:

- Review all cost estimates prepared at major milestones and prepared for specific project documents at project initiation, project approval, and PS&E.
- Monitor project cost and adjust scope to stay within funding capabilities throughout the project development process. This includes taking action at the district level where such action is within district jurisdiction.

- Review and recommend approval of program change requests, or approve if within delegated authority.
- For all major projects, certify that the a final engineer's cost estimate is complete and accurate, reflecting the true scope of the work to be performed and representative of the most current market trends. This District Director certification will be required to achieve Ready to List (RTL).
- Re-certify projects with a final engineer's cost estimate more than three months old.
- Request contingency other than 5 percent at RTL.

Headquarters Division of Design

The responsibilities include the following:

- Maintain appropriate cost estimate formats for use in preparing estimates for all projects.
- Through the Headquarters Project Delivery Coordinator, review, comment on, and recommend approval of all change control documents for scope changes and cost changes, when the costs exceed the District Director approval threshold.
- Approve contingency other than 5 percent at RTL.

Headquarters Division of Project Management-Project Delivery & Workload Development

The responsibilities include the following:

- Process all program change requests for projects submitted to Headquarters when costs exceed the District Director approval threshold.
- Hold project delivery meetings to monitor and evaluate scope, cost and schedule changes.

Headquarters Management

The responsibilities include the following:

- The Deputy Director for Project Delivery makes recommendation for program change requests when approval is not delegated to the District Director.
- The Deputy Director of Finance approves (or rejects) program change requests when approval is not delegated to the District Director.

ARTICLE 5 Coordination with Other Functional Units and Agencies

Consult Others

Other functional units (structures, right-of-way, traffic operations, materials, maintenance, construction, environmental, landscape architecture, etc.) and local entities should be involved, as appropriate, in the preparation of both project planning cost estimates and project design cost estimates. Project cost estimates should be developed through consultation with the project development team (PDT).

Structure and Right-of-way Cost Estimates

The Headquarters Division of Engineering Services-Structure Design will prepare all structure cost estimates. The district right-of-way unit will prepare all right-of-way cost estimates. The estimates prepared by those functional units are to be combined with the roadway estimate to obtain the capital outlay costs for the project. For further information on structure cost estimating and right-of-way cost estimating contact those functional units.

Cooperative Projects

Projects with contributor funding may require segregated cost estimates. To avoid confusion, as soon as the participatory rules for the project are determined, use segregated cost estimates that show the funding responsibilities of the various partners on the project. Define the various participants' funding responsibilities as early as possible in the project development process. Communication among the various partners is necessary to ensure reliable project cost estimates.

Intercounty Projects

Projects situated in more than one county may require segregated cost estimates. This allows proper crediting against county minimum funding requirements. Segregated cost estimates do not need to be completed for each item, but should be a percentage of the total project cost estimate.

Federal-aid Projects

Segregated cost estimates are required for those projects with federal funding. To avoid confusion on Federal-aid projects, use segregated cost estimates as soon as the participatory rules for the project are determined. The FHWA liaison engineer should be contacted to discuss any issues relating to Federal-aid.

SECTION 2 Project Planning Cost Estimates

ARTICLE 1 General

Project planning cost estimates are cost estimates prepared in advance of project approval. The initial programmed cost that appears the first time a project is listed in the State Transportation Improvement Program (STIP) or, State Highway Operation and Protection Program (SHOPP) is based on an escalation of a project planning cost estimate. Project planning cost estimates are categorized as: project feasibility, project initiation, draft project report, and project report.

ARTICLE 2 Project Feasibility Cost Estimate

Initial Cost Estimate

A project feasibility cost estimate may be required by management to determine whether or not to proceed with development of a project initiation document (PID). It is prepared prior to the project initiation process at the beginning of project planning studies when a highway improvement need has been identified and a project cost estimate is needed to evaluate the proposed improvements.

With management's approval to proceed, the normal process is to update the cost estimate with additional data to produce a project initiation cost estimate and a programmable project. The project feasibility cost estimate serves as background information for the project initiation cost estimate and is not used for programming the project.

Required Level of Detail

There may not be sufficient data available to prepare detailed project cost estimates prior to project initiation. However, management may still need project cost information at very early stages to make decisions on whether to proceed with development of a project initiation document. The cost estimate must be factual and could be based on similar projects.

When the majority of State highway projects were new roadways with new alignments and a well-defined scope, the project feasibility cost estimates may have been based on a cost per mile for a particular type of facility. Today, the majority of projects either maintain or improve the operation of the existing system. Cost

estimates for these projects are more difficult to develop and cannot be determined by driving through the project limits. It may be necessary to conduct a thorough onsite field review to obtain factual data to prepare realistic estimates that can be used with confidence.

Scoping for Project Feasibility Cost Estimates

Since the project feasibility cost estimate is the initial cost estimate prepared for the project, it is essential that the project be adequately scoped. The worst probable case should usually be assumed. Existing facilities thought to be adequate may become inadequate because of changes to standards, new data, further deterioration prior to construction, or other factors.

High Cost Items

To give management the best information available on which to base decisions, project feasibility cost estimates must be as realistic and accurate as possible. Estimators should be aware of features that have the potential of requiring high cost items. Items relating to the cost of mitigating hazardous waste and other environmental impacts, utility relocation, noise barriers, retaining walls, major storm drains, transportation management plan, and traffic handling must be quantified. Assumptions made during development of the cost estimate should be documented.

If structural design work is required, the Headquarters Division of Engineering Services-Structure Design should be consulted to obtain cost data for the project feasibility cost estimate.

At the feasibility stage, the right-of-way unit will normally complete the first sheet of the right-of-way data sheet with a notation, “Not Valid for Programming Purposes.”

Contingencies

Contingencies should be between 30 and 50 percent at this stage, depending on the factual data available for preparing the estimate.

ARTICLE 3 Project Initiation Cost Estimate

Required Level of Detail

The project initiation cost estimate is required for project initiation. This cost estimate is an expansion of the project feasibility cost estimate using the same format, but with more detail. Because the project initiation cost estimate will be used to program project costs, the importance of a reliable estimate at this stage cannot be overemphasized. It is the initial base against which following estimates are measured and has extremely high visibility.

Appropriate Mapping

To adequately prepare a project initiation cost estimate, it is essential to obtain appropriate mapping. Consultation with the district survey unit and a review of the *Plans Preparation Manual* is advisable.

Additional Information

Additional information that must be obtained includes: existing and forecasted traffic volume; geotechnical design information (particularly where foundation and slope stability problems can be anticipated); materials and pavement structural section design information; advance planning studies for new structures and modifying existing structures; hazardous waste assessment; potential environmental issues and mitigation; right-of-way and utilities data sheets; traffic handling and transportation management plans; and utilization of existing resources (recycling). Constructability reviews should evaluate and validate the project cost estimate and assumptions made.

Basis for Programming

The project initiation cost estimate is dated January 1 of the current State fiscal year. For programming, the cost estimate is escalated to determine the project cost for a particular year of construction. The project sponsor establishes the escalation rate.

Caltrans is the sponsor for all projects funded solely from the SHOPP and most projects funded from the Interregional Improvement Program. Because funding capacity is spread over multiple years, it may be necessary to develop more than one project cost. Each project cost is based on a different fiscal year of funding capacity. The Headquarters Division of Transportation Programming provides direction regarding funding capacity.

Use Most Up-To-Date Cost Estimate

If the time period between the approval of the project initiation document and the date of programming the project is significant, the cost estimate must be updated. In this case, a current project cost estimate should be used to program the project.

Base for Future Planning Cost Estimates

The programmed cost is the base for comparing future planning or design cost estimates. All percentage increases (or decreases) are applied from the programmed cost. Approved cost changes do not change the programmed cost, but become input to the next programming cycle. See Section 1, Article 2 – Policy for information on updating costs for programmed projects.

Contingencies

Contingencies should be 25 percent at this stage.

ARTICLE 4 Draft Project Report Cost Estimate

Required Level of Detail

Draft project report cost estimates use the same format as the project feasibility and the project initiation cost estimates, except they are considerably more detailed. At this time, the cost estimate for each competing project alternative needs to be calculated using updated data from the various functional units involved on the project (such as: materials, structure design, traffic, hydraulics, right-of-way, etc.) to produce a quality cost estimate. In addition, environmental and hazardous waste studies should have been completed by this time, so unforeseen costs should be minimal. Assumptions and costs for the transportation management plan should be updated.

Cost Estimate Changes

Cost increases or decreases from the project initiation cost estimate must be discussed in the draft project report.

Contingencies

Contingencies should be 20 percent at this stage.

ARTICLE 5 Project Report Cost Estimate

Required Level of Detail

Project report cost estimates are prepared as part of the project approval process. This occurs after completion of the public hearing process, selection of the preferred alternative, and completion of the environmental document.

Project report cost estimates are prepared using the same format as used for the project planning cost estimates. However, since the preferred alternative has been selected, the project cost estimate can now be more definitive.

Cost Estimate Changes and Approval

If the project report cost estimate results in a revised project cost estimate, the procedures for establishing and approving the revised project cost estimate must be followed. The project report cost estimate does not become the base for all future current project cost estimates comparisons unless it is used to establish a new programmed cost, either in an update of the programming document or by amendment of the programming document. All percentage increases (or decreases) are applied from the programmed cost. Approved cost changes do not change the programmed cost, but become input to the next programming cycle. See Section 1, Article 2 – Policy for information on updating costs for programmed projects.

Cost increases or decreases from the project initiation cost estimate must be discussed in the project report.

Contingencies

Contingencies should be 15 percent at this stage.

SECTION 3 Project Design Cost Estimates

ARTICLE 1 General

Design Cost Estimates

Project design cost estimates are made after project approval, updated throughout development of the PS&E, and are categorized as either preliminary or final. Project design cost estimates focus on the construction costs of the project and are input into the Basic Engineering Estimating System (BEES).

Project design cost estimates should be considerably more detailed than project planning cost estimates. As engineering and environmental studies progress, more information, such as final contour mapping, materials and drainage information, refined transportation management plans, structure studies, and evaluations from design phase constructability reviews becomes available. This data allows for the preparation of more detailed cost estimates.

Construction Costs Only

Project construction costs are only a portion of the project's capital outlay costs that have been programmed and reported upon during the project planning phase. When current project cost estimates are required during the project design phase, the total project capital outlay costs are implied unless otherwise specified.

Total Capital Outlay Costs

Project total capital outlay costs include the right-of-way costs and the construction costs. Right-of-way funds are typically expended during the design phase to acquire parcels needed to construct the project. For this reason, there must be close coordination with the district right-of-way unit when comparing project cost estimates with the programmed project costs during the design phase. Care must be taken to ensure that all right-of-way funds (either expended or unexpended) are accounted for and are consistent with the programmed cost.

ARTICLE 2 Transitioning from Project Planning to Project Design Cost Estimates

Identify Contract Items of Work

Management approval of the project allows the project to transition from the project planning phase to the project design phase. All of the project features should be known and many contract items of work can be identified. In addition, the items of work identified and estimated during the project planning phase should now be better defined as work performed by the design staff and the other functional units is completed.

The construction contract related portions of the project report cost estimate are put into the BEES format. To do this, specific contract items of work need to be identified and the quantities associated with them need to be calculated. Most of this work should have been done previously to complete the project report cost estimate used to approve the project, but not to the detail required for project design cost estimates.

Project Design Cost Estimate Components

The project design cost estimate consists of the district cost estimate and when applicable, the structure cost estimate. The district cost estimate is compiled by the PE to capture all of the highway contract items of work and the costs associated with construction of those items. The structure cost estimate is compiled by the Headquarters Division of Engineering Services-Structure Design to capture all of the structural contract items of work on the project and the costs associated with their construction.

ARTICLE 3 Basic Engineering Estimating System

General

Project design cost estimates must be prepared using the Basic Engineering Estimating System (BEES); information is available at:
http://it.onramp.dot.ca.gov/information-about-bees

Additionally the *Ready to List and Construction Contract Award Guide (RTL Guide)* contains important information about the requirements for preparing the project cost estimate.

The BEES provides the data files required for the Project Information Systems and Analysis (PISA), and the Bid Opening and Progress Pay System, and produces segregated cost estimates according to fund source.

Highway, Bridge, and Combined Cost Estimate Files

The BEES permits independent storage of data from the district and Headquarters Division of Engineering Services-Structure Design for each project and the recall of separate or combined cost estimates. The district and Structure Design are each responsible for independently establishing and updating their own estimate data. The highway cost estimate is established by the district and the bridge cost estimate is established by Structure Design. Reports may be requested as highway (H), bridge (B) or combined (C) by entering the code (H, B, or C) in the appropriate area on the BEES Report Request Form.

Common Highway and Bridge Items

When a combined cost estimate report is requested, the quantities for highway and bridge items are integrated. Estimators in Structure Design and the district should reach prior mutual agreement for prices on common items. Items in common to Structure Design and the district, such as temporary railing, must be reviewed carefully to avoid duplicating quantities or overlooking items in the cost estimate.

Highway Cost Estimate

The district portion of the cost estimate should be entered into the BEES at the beginning of the design phase using the coded contract items list located at: http://oe.dot.ca.gov/occs.html

As contract items of work are identified and quantities calculated, these quantities should be entered into the BEES. Entering the completed quantities into the BEES as soon as they are calculated facilitates cost estimate updates and eases the preparation of the final engineer's cost estimate.

For projects with contributor funding or Federal-aid funding and projects located in multiple counties, segregated cost estimates must be available in the BEES at the time

of PS&E delivery. As soon as the participatory rules for the project are determined, estimators must use segregated cost estimates in the BEES. By doing this, no changes should be necessary to any segregation once the project is listed for advertisement.

The highway cost estimate consists of the following BEES components:

- Contract Items – These are the items of work for the project and are used for the bid item list in the construction contract documents.
- Supplemental Work – Supplemental work is work of an uncertain nature or amount and is not paid for on a contract item basis. Work that is known but cannot be predetermined and provided for under contract items of work should be included as supplemental work. Supplemental work identified in the contract special provisions must be included.
- State-Furnished Materials and Expenses – Items listed under this component consist either of work done by State forces, or others, concurrently with contract construction operations; or materials to be purchased and charged against the project, but which will be paid for directly by the State, not the contractor.
- Contingencies – Contingencies are a percentage of the subtotal of the cost of contract items, supplemental work, and State-furnished materials and expenses, and are included in the grand total of the highway cost estimate to allow for unforeseen increases.

Specific requirements and required approvals for the use of bid items (contract items), supplemental work, department-furnished materials as well as department expenses (state-furnished materials and expenses), and contingencies can be found in the *Ready to List and Construction Contract Award Guide (RTL Guide)*.

Bridge Cost Estimate

The bridge cost estimate should be entered into the BEES by Structure Design, as soon as possible after project approval, using the BEES coded item list. However, many contract items of work for structures are not known in enough detail until late in the design phase. For that reason, the bridge cost estimate may not be available for use until all of the structural design work is complete. Until the bridge cost estimate is available, the cost data used for the project report cost estimate should be used as the bridge cost estimate. It is important to keep in close contact with the Headquarters Division of Engineering Services-Structure Design project functional manager and the structure designer during this time-frame. The PE must determine

whether any unforeseen complications have occurred that will alter the estimated cost of the structures for the project.

When Structure Design completes its portion of the project cost estimate during the design phase, that data is input in the BEES similar to the way that the highway contract items of work are input by the district.

ARTICLE 4 Preliminary Engineer's Cost Estimate

General

The conversion of the construction related portions of the project report cost estimate into the BEES creates the preliminary engineer's cost estimate. The preliminary engineer's cost estimate is an estimate of the fair and reasonable price the State should expect to pay for each of the contract items of work to be performed. The preliminary engineer's cost estimate should be updated frequently during the design phase as the project construction details, specifications and plans are finalized into a contract document. The preliminary engineer's cost estimate is based on the expected contract item prices as of the date of the estimate.

Portion of Capital Outlay Cost

The preliminary engineer's cost estimate must be used in combination with other cost estimates (right-of-way, cooperative features, etc.) during the design phase to obtain the capital outlay costs for the project. The preliminary engineer's cost estimate is used until the project reaches the end of the PS&E development and the contract documents are finalized. When this happens, the preliminary engineer's cost estimate becomes the final engineer's cost estimate.

Contingencies

Preliminary engineer's cost estimates prepared prior to PS&E submittal may include an amount up to 10 percent of the cost estimate for contingencies.

ARTICLE 5 Final Engineer's Cost Estimate

General

The final engineer's cost estimate, also commonly referred to as the Engineer's Estimate, is completed at the end of the PS&E development. All contract items have been identified, had the quantities calculated, and entered into the BEES.

The final bridge cost estimate is prepared by Structure Design and transmitted to the district. The district combines the final highway cost estimate and the final bridge cost estimate into the final engineer's cost estimate.

Certification of Final Engineer's Cost Estimate

For major projects, the District Director will be required to certify that the estimate is complete and accurate, reflects the true scope of work to be performed, and accounts for current market trends. This certification is required before a project can achieve Ready to List. Final engineer's cost estimates that are more than three months old must be updated and recertified.

Locking Files

After compilation of the PS&E has been completed and the project is Ready to List (for advertising), the final engineer's cost estimate is "locked" in the BEES by Headquarters Division of Engineering Services-Office Engineer. After it is locked, only Office Engineer can alter the BEES file. If changes to the cost estimate are necessary after it has been locked, contact the project management unit in Office Engineer. Office Engineer will review the request and will make the changes or, if timing is such that it is practical, will arrange for unlocking the BEES to allow the district and/or Structure Design to make the changes.

Comparison with Contractor Bids Received

The final engineer's cost estimate is used for comparison with the various contractor bids received for the project and is the basis for the award of the contract. It should be noted that the money available to construct the project is the sum total of the dollar amount of the low bidder's contract bid items plus the dollar amounts of the supplemental work, State-furnished materials and expenses, and contingencies from the final engineer's cost estimate.

Contingencies

Contingencies are a percentage of the subtotal of the cost of contract items, supplemental work, and State-furnished materials and expenses, and are included in the grand total of the final engineer's cost estimate to allow for unforeseen increases. Contingencies should be 5 percent or less at this stage. The BEES automatically allows for a contingency of 5 percent, but any amount may be entered, either by percent or by specified dollar amount. Justification is required when a contingency other than 5 percent is to be included in the final engineer's cost estimate. Contingency justifications should be supported by a risk analysis. Requests are submitted to the Chief, Headquarters Division of Design, for approval.

CHAPTER 21 – Exceptions to Design Standards

Table of Contents

CHAPTER 21 – Exceptions to Design Standards 21-3
ARTICLE 1 General 21-3
Responsibility 21-3
Documentation 21-3
Identification of Nonstandard Design Features 21-3
Applicability 21-3
Dispute Resolution Process 21-4
Definitions 21-5
Distribution and Filing 21-5
ARTICLE 2 Exceptions to Mandatory Design Standards 21-7
Consultation Requirements 21-7
Requests for Design Exceptions 21-7
Integration with Project Development Process 21-7
Miscellaneous Requirements 21-10
Approvals 21-11
ARTICLE 3 Exceptions to Vertical Clearance on Department of Defense Rural and Single Interstate Route System 21-12
General 21-12
Documentation Requirements 21-12
ARTICLE 4 Exceptions to Delegated Mandatory Standards and Advisory Design Standards 21-13
Authority 21-13
Documentation 21-13

Table of Figures

Figure 21-1 Requirements for Fact Sheet Approval 21-6

CHAPTER 21 – Exceptions to Design Standards

ARTICLE 1 General

Responsibility

Headquarters Division of Design (DOD) establishes and supports the consistent application of highway design standards (in accordance with the *Highway Design Manual*) to ensure optimal safety for the traveling public and those who work to construct, operate, and maintain the State Highway System.

Documentation

The purpose of the fact sheet for exceptions to design standards (also known as a design exception fact sheet or fact sheet) is to document engineering decisions leading to the approval of each exception to a design standard. It is essential that adequate records are prepared and preserved to document such decisions and approvals. This documentation is necessary for Caltrans to maintain design immunity.

Identification of Nonstandard Design Features

The registered civil engineer in responsible charge of the work (as defined by *California Business and Professions Code*, Section 6703), or other licensed professional practicing within the scope of their license, must identify both existing and proposed nonstandard design features. Determination of nonstandard design features should be initiated early in the project development process.

Applicability

The phrase "mandatory design standards" refers to the mandatory standards outlined in *Highway Design Manual*, Table 82.1A, while the phrase "advisory design standards" refers to the advisory standards outlined in *Highway Design Manual*, Table 82.1B. Headquarters Division of Design is responsible for the mandatory design standards except as noted in Table 82.1A. The exceptions include the

mandatory standards for which responsibility has been delegated to the District Directors and the mandatory standards in *Highway Design Manual* Chapters 600 through 670 that are the responsibility of the State Pavement Engineer. Additionally, the responsibility for all advisory standards has been delegated to the District Directors. See Article 4 for conditions on delegation to District Directors. Article 2, Exceptions to Mandatory Design Standards, is applicable to the mandatory standards which Headquarters Division of Design (delegated to the Headquarters Project Delivery Coordinator) is the approval authority.

Dispute Resolution Process

Occasionally, there may be disagreements between the district and the Headquarters Project Delivery Coordinator on the proper course of action. When disagreements cannot be resolved, the following dispute resolution process must be used:

- Pre-elevation: Every effort should be made to resolve disputes between the district and Headquarters Division of Design, at the lowest possible level.
  - District design office chief discusses issue with Headquarters Project Delivery Coordinator.
  - District/region design manager discusses with district design office chief, staff, and project engineer to determine facts.
  - District/region design manager discusses with Headquarters Project Delivery Coordinator.
  - Headquarters Project Delivery Coordinator and district/region design manager may discuss with other district staff or Headquarters Division of Design staff.
  - District/region design manager and Headquarters Project Delivery Coordinator discuss with District Director and other district managers.
- Formal elevation: If there is agreement at the district level and all attempts between the district and Headquarters Project Delivery Coordinator fail to result in concurrence from the Headquarters Project Delivery Coordinator;
  - District Director prepares written justification to Headquarters Division of Design Chief that includes signature of the district/region design manager.

- Headquarters Division of Design Chief will:

  1. Attempt to resolve issue. If no resolution;

  2. Appoint a three member team of subject matter experts to review and make a recommendation to Headquarters Division of Design Chief.

  3. Consider the recommendations of the team and prepare a decision to either support or deny District Director's request.

  4. If Headquarters Division of Design Chief supports the District Director's request, the Headquarters Division of Design Chief will sign as the approval authority.

- District Director can appeal to Deputy Director Project Delivery (Chief Engineer) with no further appeals.

Definitions

Design standards risk assessment – is a list of design standards that will likely not be met for each alternative and the probability of approval for each potential exception to a design standard. An example of the design standards risk assessment format can be seen in the project report template associated with Appendix K – Preparation Guidelines for Project Report.

Geometrically feasible – means project alternatives are designed in accordance with the *Highway Design Manual* and specifically, alternatives meet the mandatory and advisory standards in the *Highway Design Manual* related to geometric design or have approved fact sheets for exceptions to mandatory and advisory standards.

Distribution and Filing

Once final approval is obtained, the project engineer must send one copy of the approved fact sheet to the Division of Design Division Chief, Attention: Design Exception. Include copies of all correspondence between the district and Federal Highway Administration (FHWA) pertaining to the request for design exception approval.

The signed original fact sheet and when applicable, the FHWA approval letter, must be filed in the project history file. A backup copy should be filed in a separate permanent file or in the district's central file.

Figure 21-1 Requirements for Fact Sheet Approval

<table>
<tr><th rowspan="2"></th><th>Interstate</th><th colspan="2">Non-Interstate</th></tr>
<tr><th>NHS</th><th>NHS</th><th>Non-NHS</th></tr>
<tr><td rowspan="2">Mandatory Design Standard - FHWA 13 Controlling Criteria [1, 2]</td><td rowspan="2">1) CT DOD Approval
2) FHWA Approval [2]

Note: Numbered steps imply sequential processing.</td><td colspan="2">CT DOD Approval for State Highways</td></tr>
<tr><td colspan="2">Local Agency Approval for Non-State Highways</td></tr>
<tr><td>Mandatory Design Standard - Vertical Clearance on Rural and Singular Route System [1]</td><td>1) CT DOD Approval
2) FHWA Approval
3) SDDCTEA Concurrence Facilitated by FHWA
4) FHWA Final Approval

Note: Numbered steps imply sequential processing.</td><td colspan="2">N/A</td></tr>
<tr><td rowspan="2">Mandatory Design Standard - Caltrans only [1]</td><td rowspan="2">CT DOD Approval</td><td colspan="2">CT DOD Approval for State Highways</td></tr>
<tr><td colspan="2">Local Agency Approval for Non-State Highways</td></tr>
<tr><td rowspan="2">Advisory Design Standard [3]</td><td rowspan="2">CT DD Approval</td><td colspan="2">CT DD Approval for State Highways</td></tr>
<tr><td colspan="2">Local Agency Approval for Non-State Highways</td></tr>
</table>

CT – Department of Transportation (Caltrans)
DD – District Director
DOD – Division of Design
FHWA – Federal Highway Administration
NHS – National Highway System
SDDCTEA – Surface Deployment and Distribution Command Transportation Engineering Agency (Department of Defense)
[1] – For mandatory design standards where the approval is delegated to the District Director, all requirements remain the same except that “CT DOD Approval” is replaced by “CT DD Approval.” Also see note 3.
[2] – FHWA approval may be required, see “FHWA Approval” heading in Article 2
[3] – See Article 4 for conditions on delegation to District Directors

ARTICLE 2 Exceptions to Mandatory Design Standards

Consultation Requirements

Potential nonstandard design features must be discussed with the Headquarters Project Delivery Coordinator as soon as the need for a design exception is identified.

Depending on the level of FHWA oversight, potential design exceptions may need to be discussed with the appropriate FHWA transportation engineer. See Sub-article "Approvals" near the end of this article.

Requests for Design Exceptions

Once the Headquarters Project Delivery Coordinator determines that there may be sufficient justification to proceed with the evaluation of a design exception, the following steps must be taken:

1. Prepare the draft fact sheet in conformance with the outline in Appendix BB – Fact Sheets for Exceptions to Mandatory Design Standards.
2. Submit the draft fact sheet to the Headquarters Project Delivery Coordinator for review.
3. Resolve all comments to the satisfaction of the Headquarters Project Delivery Coordinator.
4. Circulate the fact sheet for approval signatures. See Sub-article "Approvals" near the end of this article.

Requests to perpetuate existing nonstandard design features within a project's work limits will be made in accordance with the above procedures, except when the Headquarters Project Delivery Coordinator determines that a different form of documentation is more appropriate.

Integration with Project Development Process

District approval of project initiation documents (PIDs) and project approval documents must follow the conditions outlined in this sub-article.

The Headquarters Project Delivery Coordinator determines if there is sufficient justification to approve mandatory design exceptions and is the approval authority for altering the standard practice as outlined in this sub-article, as context warrants.

If the Headquarters Project Delivery Coordinator identifies significant changes to the conditions supporting the exceptions to design standards when the fact sheet is submitted for approval, the Headquarters Project Delivery Coordinator may determine that the identified changes invalidate the previous justification that supported their approvability.

Standard Practice

Each alternative must be geometrically feasible in all project initiation and project approval documents except for certain situations as provided for in this sub-article.

A discussion of design standards must be included in all project initiation and project approval documents. For alternatives meeting all standards, a statement of this fact should be included in the report. When alternatives propose new nonstandard design features or perpetuate existing nonstandard design features, the report must include: a brief description of the nonstandard features; discussion of issues related to each nonstandard feature; and a reference to all approved fact sheets that includes the approval authority and date.

The design standards risk assessment table is the method to document deferral of fact sheet approval. It must be included in the appropriate report and the risks included in the project's risk register. The project engineer lists the design standards that are likely to not be met for each alternative. The Headquarters Project Delivery Coordinator provides the rating and justification for the design standards risk assessment and summary language for the discussion in the project development report.

Project Initiation Document

For projects with only one Build Alternative, fact sheets must be approved before approval of the PID, except when the PID is a project study report - project development support (PSR-PDS).

It is assumed that projects with multiple build alternatives will use the PSR-PDS process. However, in the rare case where another type of PID is prepared for a project with multiple build alternatives, it is expected that one alternative will be geometrically feasible and the other alternatives use the design standards risk assessment when design standards are not met.

- Project Study Report - Project Development Support Only

Fact sheets are not required for the PSR-PDS project initiation document. However, there must be a discussion whether each alternative proposes new nonstandard design features or perpetuates existing nonstandard design features. Alternatives should be discussed with the Headquarters Project Delivery Coordinator early in the project initiation process to identify potential nonstandard design features. Alternatives with insufficient information for fact sheet development must go through a design standards risk assessment to indicate a level of risk for conceptual acceptability of the alternative.

Draft Project Report

For projects with only one Build Alternative, fact sheets must be approved before approval of the draft project report (DPR) or any other type report serving the purpose as a DPR.

For projects with multiple build alternatives, the alternatives with proposed nonstandard design features must go through a design standards risk assessment to indicate the level of risk associated with the probability of approval for each potential exception to a design standard. Based on the associated risks and consideration of any previously approved fact sheets, the District Director can then decide if approval of fact sheets should be pursued for specific alternatives to level the engineering risk prior to approval of the DPR.

Project Report

Fact sheets must be approved before approval of the project report (PR) or any other type of project approval document.

Plans, Specifications, and Estimate

If the need for nonstandard design features is determined after approval of the project approval document, fact sheets should be approved prior to milestone M377 PS&E to DOE and must be approved before milestone M380 Project PS&E.

Construction

During the construction phase of a project, it is the resident engineer's responsibility to ensure that proposed changes to the design meet design standards or have approved fact sheets for nonstandard features. It is the project engineer's responsibility to review proposed changes and prepare and secure approval of fact sheets for proposed nonstandard features. Nonstandard features discovered during construction must

have approved fact sheets before the feature is constructed. Design exceptions will not be considered for nonstandard features after they are constructed. If nonstandard features are constructed based on the contract plans, the project engineer is responsible for resolving the issue so the features meet standards. If nonstandard features are constructed not based on the contract plans, the resident engineer is responsible for resolving the issue so the features meet standards. When issues arise, all appropriate parties need to be involved so timely decisions can be made to minimize the impact to the construction schedule.

Miscellaneous Requirements

- When nonstandard design features are proposed by an encroachment permit applicant, fact sheets are prepared by the applicant's registered civil engineer. The Caltrans functional unit responsible for preparation of the permit engineering evaluation report (PEER) will facilitate the coordination with the Headquarters Project Delivery Coordinator for draft fact sheet review. If a PEER is not required, the fact sheet processing will be facilitated by the functional unit assisting the district permit engineer.
- A single fact sheet may contain multiple design exceptions.
- Nonstandard design features identified after approval of a fact sheet require the preparation of a supplemental fact sheet. The prior approved nonstandard design features should be enumerated in the supplemental fact sheet.
- Fact sheets should not be attached to any project initiation document, project approval document, or engineering report. They should be summarized and referenced in appropriate reports.
- Approval of design exceptions for projects on the National Highway System, including the Interstate System is a federal action that requires compliance with the National Environmental Policy Act (NEPA). Caltrans has developed a "blanket" categorical exclusion for NEPA compliance when approval of design exceptions is the only relevant federal action on the project. See the *memorandum* from the Division of Environmental Analysis for more information.
- Commitments for future work should not be made in design exception fact sheets. If a commitment must be made, a follow-up project is to be programmed and Caltrans must have the authority to define the scope of the project to include the commitment. Additionally, the justification for the commitment must be discussed in the appropriate project development report. The district is responsible for minimizing future commitments, monitoring those commitments, determining if prior commitments were made, and documenting commitments made in design exception fact sheets.

Approvals

Signature, Coversheet Format

The fact sheet outline shown in Appendix BB provides a recommended format for the signature/cover sheet. The format may be varied to suit each district's organization; however, each fact sheet must comply with the requirements of Chapter 2, Section 9.

Caltrans Approval

The responsibility for approval of all exceptions to mandatory design standards on the State Highway System and local facilities within State right-of-way rests with the Headquarters Division of Design Division Chief and has been delegated to the Headquarters Project Delivery Coordinator.

Caltrans has delegated the responsibility for approval of design exceptions for local Federal-aid projects, not on the State Highway System, to the public works director or the city or county engineer if the public works director is not a registered civil engineer.

FHWA Approval

Formal FHWA approval may be required for design exceptions to the 13 controlling criteria when the project is identified as one of the "Projects of Division Interest" or "Projects of Corporate Interest," as outlined in the latest *Stewardship and Oversight Agreement on Project Assumption and Program Oversight* between the Federal Highway Administration, California Division and Caltrans. See Chapter 8 – Overview of Project Development and Chapter 80 – Application of Design Standards of the *Highway Design Manual* for more information.

Separate FHWA design exception approval is also required for any project that does not provide or maintain a minimum vertical clearance over the Department of Defense Rural and Single Interstate Route system. Additionally, design exceptions for vertical clearances over any Interstate route that is not a rural Interstate or a single routing in an urban area will require special notification. See Article 3 for more information.

Requests for FHWA approval should be made by letter, addressed to the FHWA division administrator, and signed by the District Director or a District Division Chief. Requests must be accompanied by a copy of the approved fact sheet.

ARTICLE 3 Exceptions to Vertical Clearance on Department of Defense Rural and Single Interstate Route System

General

In coordination with the Department of Defense, the FHWA has identified a subset of the Interstate System composed of all rural Interstates and a single routing in urban areas that would meet the most urgent national defense needs. Those routes shown and described in *Highway Design Manual* Figure 309.2 and Table 309.2B are given special attention in regard to minimum vertical clearance.

The FHWA has made a commitment to the Department of Defense to maintain a 16-foot minimum vertical clearance where it already exists and to upgrade clearances less than 16 feet as rapidly as is practical. Any project on this system (including resurfacing, restoration, and rehabilitation [RRR] projects) will be closely scrutinized to ensure compliance with this vertical clearance standard; exceptions to this standard will be difficult to obtain, and will be subject to additional federal review.

Documentation Requirements

Exceptions for vertical clearances of less than 16 feet over any portion of this system must be processed separately in the form of a design exception fact sheet. See Appendix BB for the appropriate format.

The requests will receive internal reviews within Caltrans and the FHWA Division Office. The FHWA Division Office must obtain concurrence from the Surface Deployment and Distribution Command Transportation Engineering Agency (SDDCTEA) of the Department of Defense prior to approval. Due to this additional and lengthy step, potential requests for design exceptions must be identified and discussed with the Headquarters Project Delivery Coordinator as early as possible.

Additionally, exceptions for vertical clearances of less than 16 feet over any Interstate route that is not a rural Interstate or a single routing in an urban area will require FHWA and Surface Deployment and Distribution Command Transportation Engineering Agency notification.

Wherever possible, vertical clearances should continue to be designed to comply with the Caltrans standards, as described in the *Highway Design Manual*.

It is the responsibility of the project engineer to submit the fact sheet to the FHWA Division Office after approval has been obtained from the Headquarters Project Delivery Coordinator. The transmittal should note whether or not a fact sheet for additional nonstandard design features on the proposed project is anticipated.

Once final approval is obtained from FHWA, the project engineer must send one copy of the approved fact sheet to the Headquarters Division of Design Division Chief, Attention: Design Exception. Include copies of all correspondence between the district and FHWA pertaining to the request for design exception approval.

ARTICLE 4 Exceptions to Delegated Mandatory Standards and Advisory Design Standards

Authority

Approval of exceptions to some mandatory design standards, as outlined in *Highway Design Manual* Table 82.1A, has been delegated to the District Directors. Also, approval of all exceptions to advisory design standards has been delegated to the District Directors. If the District Director is not a registered civil engineer, written delegation to the district or region manager whose responsibilities include the design function is required.

Documentation

Each district is responsible for formalizing its own procedures for reviewing, documenting, and approving exceptions to delegated mandatory design standards and advisory design standards. The district process should be similar to the process outlined in Article 2 and the fact sheet should cover the same type of project data and justification as that required for the mandatory design standards fact sheet; see Appendix BB. The district may combine the delegated mandatory design standards and advisory design standards into a single fact sheet.

CHAPTER 22 – Community Involvement

Table of Contents

CHAPTER 22 – Community Involvement 22-3
ARTICLE 1 General 22-3
Philosophy 22-3
Purpose 22-3
ARTICLE 2 Securing Community Consent to Projects 22-3
Identify all Interests 22-3
Elements of Communication 22-3
Do Not Minimize Project Effects 22-4
Concentrate on Those Affected 22-4
Early Contact 22-4
ARTICLE 3 Community Involvement Plans 22-4
Community Involvement Plans 22-4
ARTICLE 4 Initial Meetings 22-5
Definition 22-5
Purpose 22-5
Format 22-5
Publicity 22-6
Considerations 22-6
Summary 22-6
ARTICLE 5 Principles and Techniques for Community Involvement 22-7
Open Up Communication Channels 22-7
Use Existing Community Organizations 22-8
Meetings 22-8
ARTICLE 6 Meeting Formats 22-9
Open Houses 22-9
Formal Meetings 22-12
Informal Informational Meetings 22-13
Working Meetings 22-14
Open Meetings 22-15
Forums 22-16
ARTICLE 7 Citizen Advisory Committees 22-17
Definition 22-17
Applicability 22-17
Format 22-18

Considerations 22-18
ARTICLE 8 Newsletters 22-18
Newsletter Use 22-18
Newsletter Guidelines 22-19
ARTICLE 9 Written Notification of Initiation of Studies 22-19
Mailed after Agreement on Study Process 22-19
Mailing List 22-19
Notification Letter 22-20
Activated Projects Need New Notices 22-21
ARTICLE 10 Media Relations 22-21
Staff Interaction with Media 22-21
Working Relationship with Key Reporters 22-21
Initial Meetings with Media 22-22
Reporting Strategies 22-22
Use Public Information Office 22-22

CHAPTER 22 – Community Involvement

ARTICLE 1 General

Philosophy

Caltrans' project development philosophy (See Chapter 1 – Introduction, Section 5, for a complete description) is to consider economic, social, and environmental effects in order to make project decisions in the best interest of the public. Therefore, community involvement must be an integral part of the project development process.

Purpose

The purpose of public involvement is to develop projects that respond to transportation needs with a minimum of community and environmental impact. Project team members must understand community values and opinions. All affected interests must be aware of a project's impact on them. Affected interests include individuals, businesses, associations, other officials, and institutions that may be affected by a project.

ARTICLE 2 Securing Community Consent to Projects

Identify all Interests

Early in the project development process, the project development team (PDT) should identify all affected interests, determine the nature of their interest and attitude toward the project, and fashion approaches to these interests.

Elements of Communication

It is likely that a practical and acceptable solution to a transportation problem can be implemented if those affected by a project become convinced that the following holds true:

1. The transportation problem is serious.
2. Caltrans has the key responsibility for addressing the problem.
3. Caltrans process is fair and reasonable.
4. Caltrans understands and cares about the concerns of the affected interests.

Do Not Minimize Project Effects

It is not necessary to convince affected interests that they will be undamaged by the project. Project development staff members should do everything possible to understand the project's negative effects and communicate with those affected.

Concentrate on Those Affected

The more seriously someone is affected by a project, the more they should be approached privately, informally, and in smaller groups. Those most seriously affected should be approached individually.

Early Contact

As early as is possible, the PDT should contact local, regional, State, and federal agencies with even a minor stake in a project. By working together from the earliest stages, it is possible to reduce the chance of conflict at critical times; this usually results in a better project.

ARTICLE 3 Community Involvement Plans

Community Involvement Plans

Community involvement plans should be developed for all potentially controversial projects; these should be included as a part of the project study report. The plans should be updated as studies progress.

Elements of a community involvement plan include:

- A list of those likely to perceive that their interest will be affected by the project
- A description of the potential concerns of each
- A description of techniques to be used to communicate with affected interests, such as newsletters, media, individual meeting, committee membership, etcetera
- A communications time-line, keyed to significant project milestones

ARTICLE 4 Initial Meetings

Definition

The initial meeting is held with affected local agencies or their technical and planning staffs, along with other interested or affected groups. The meeting may be combined with the scoping meeting for projects involving an environmental impact statement (see the *Standard Environmental Reference*). The meeting is open to the general public. It should be well publicized.

Purpose

The initial meeting provides an early exchange of information and ideas, as well as an opportunity to discuss the proposed project timetable. Other features to be discussed include preliminary data or issues bearing on the decision to proceed, focusing particularly on the need for the project.

Project Development Categories (see Chapter 8 – Overview of Project Development, Section 5, for definitions) are useful classifications for helping to determine when it is appropriate to convene an initial meeting. Initial meetings should be held under the following circumstances:

- Category 1 and 2A projects—mandatory
- Category 2B / Category 3 / Category 4A projects—convene if sufficient interest or if local agency requests
- Category 4B projects—convene only if local agency requests

The matrix in Chapter 8 – Overview of Project Development, Section 5, Figure 8-1, provides other useful information regarding the relationship between Project Development Categories and community involvement activities.

Format

The PDT may plan the initial meeting using any of the meeting types discussed in Article 7, "Meeting Formats." Generally, the open house format is best for the initial meeting.

Publicity

Publicity about the initial meeting may include news releases, paid advertisements, or both. Paid advertisements will follow the general format and content instructions described in Appendix HH – Public Involvement. All publicity should be handled by the district's public information office.

Individual invitations are sent to legislators, city council members and county supervisors, and to their technical and planning staff department heads. Invitations are also sent to agencies and groups considered to be mandatory contacts (see the *Standard Environmental Reference*) and other individuals, businesses, associations, officials, or institutions affected by a project. Local governmental units are to be consulted regarding civic and citizen organizations to be invited.

In addition to the preceding, individual invitations are to be sent to each city council and board of supervisors as a legislative body for Project Development Category 1 and 2A projects. The invitations will include an additional paragraph requesting that the "legislative" body comment on the meeting within 30 days, addressing the following: study objectives, organization, time schedule for the study, study limits, and suggestions for participation of affected interests.

Considerations

At the time of mailing, one copy of each typical letter of invitation should be sent to the Headquarters Division of Design, attention: Chief Office of Project Development Procedures, along with a list of those receiving the letter. Sample invitation letters may be found in Appendix HH – Public Involvement.

Summary

At the conclusion of the meeting, a summary of the meeting should note substantial items discussed and any agreements reached. A list of those attending the meeting by agency, organization, group and number of individuals and of those who submitted written material should be attached to the summary. A copy of the summary with the district's conclusions on whether or not to proceed with the study should be sent to the Headquarters Division of Design, attention: Chief Office of Project Development Procedures.

ARTICLE 5 Principles and Techniques for Community Involvement

Open Up Communication Channels

Initiate Contact

As early as possible in the project development process, Caltrans should contact likely affected parties, to explain the following:

- What problem or need the project addresses
- Why Caltrans' overall transportation mission makes it imperative that we address the need
- How Caltrans develops projects
- Current status of project plans, current activities, and project schedule
- Caltrans' understanding of their interest and concern

Ask the affected party to contribute their advice and comments. Stress that the earlier their concerns are made known, the more likely a way can be found to accommodate them; but make it clear that Caltrans may not be able to satisfy everyone's concerns.

Document Discussion

Document discussions in writing. They should be part of the project file and will document citizen involvement in the project development process. As contacts continue, document those as well.

Use Best Communication Method

Select the best way to communicate with the affected party, based on the information to be communicated and how they may best be reached. Meetings, telephone contacts, letters, media, newsletters, and many other types of communication are available.

Open Communication

Once communication is flowing both ways, Caltrans should provide the affected party with any information affecting them, as it develops—whether it is good news or bad news. Bad news is best communicated informally, in a one-on-one exchange, rather than in large meetings or through the media.

Communicate Directly

Communicate directly with the most-seriously affected interests. Direct communication provides a far better chance to understand them and how they perceive the project or proposal. Do not filter their concerns through another party.

Involve Opponents

Those opposed to a project are much more likely to consent to the project if they are actively involved throughout the review process; their consent is less likely if they remain outside the process.

Use Existing Community Organizations

Identify Existing Community Organizations

Existing community organizations provide an effective avenue for communicating with large numbers of people to establish the legitimacy of the project. They are especially important for maintaining credibility during the sometimes lengthy time frame required to complete a transportation project. Include churches, service groups, fraternal organizations, business groups, civic and neighborhood associations, advocacy groups for the disabled, and professional and trade organizations.

Establish Clear Communications

From the outset, work out an understanding with each community organization to get clear communications between the project team and the community. Establish a working relationship that allows the organization to have an important role and a two-way communications channel between the community and the project.

Use Local Newsletters

Many community organizations have newsletters that can use information about the project, providing a relatively inexpensive communication channel for large numbers of people.

Meetings

Clarify Purpose for Meeting

Before planning a public meeting as part of the project development process, consider communications objectives carefully.

When representatives of different interests meet face to face, especially in front of large numbers of people or the media, they may make demands and ultimatums. Such demands become very difficult to back away from, and can result in a worsened climate for agreement on a project. Therefore, Caltrans should carefully consider if a meeting will be productive before agreeing to one or calling one.

Choose a Format

If a meeting is to be held, choose an appropriate meeting format; each has advantages and disadvantages. See Article 7 for a discussion on meeting formats.

Prepare a Meeting Summary

At the conclusion of a meeting (regardless of the meeting format), a summary should be prepared, noting those attending, substantial items discussed and any agreements reached. The summary should be circulated to those attending the meeting, as well as to any others with an interest in the items discussed.

ARTICLE 6 Meeting Formats

Open Houses

Definition

Open houses are informal meetings where individuals may attend at any time, observe displays, watch a presentation, ask questions of technical and other staff, and discuss proposals individually.

Applicability

Open houses are useful in establishing two-way communication, responding to community needs, understanding affected interests, seeing the project through their eyes, identifying problems, generating solutions, and establishing credibility.

Format

Open houses usually run for several hours: even for successive evenings. Ample Caltrans staff, including the project manager, should be available for discussion. Information stations may be organized by subject matter, such as “Environmental”, “Right-of-Way”, “Design”, or by project alternative, with several disciplines available to discuss each.

Displays

Displays should clearly and prominently advise the public of the purpose of the project and the purpose of the meeting.

Presentations

Presentations are best handled by an open captioned videotape, running continuously.

- Presentations should be brief (about 20 minutes) and comprehensible to the lay citizens. Presenters may use exhibits or slides and refer to handouts.
- In everyday language, state the need for the project with respect to quality of life. Address what today's need is, then follow with what will happen in the future if this problem is not addressed.
- Stress Caltrans' mission and responsibility for addressing the transportation problem, in language that makes it clear that it would be irresponsible not to address the problem.
- Describe the process being followed to address the problem, including:
  - Relationship to the local planning process
  - Alternatives
  - How alternatives were chosen
  - Assumptions governing studies
  - Kinds of studies being done
  - Approvals by the California Transportation Commission (CTC) and other permitting agencies
  - Tentative time schedule
- Descriptions of alternatives may include:
  - Type of facility
  - Ultimate number of lanes, if a highway
  - Ultimate median width
  - Basic right-of-way width for main line
  - Streets to be closed
  - Streets to be separated
  - Streets to be connected
  - Local streets to be substantially altered
  - Pedestrian separations
  - Railroad separations
  - Location of frontage roads
  - Noise attenuation
  - Truck inspection/weigh and agricultural inspection stations

  - Roadside rest areas and vista points
  - Nonmotorized transit and park-and-ride lots
  - Bus and carpool lanes
  - Costs for right-of-way and construction
- Describe issues likely to be of concern to the community. These may include:
  - Regional and community growth, land use, economic activity, employment gains and losses, and community and neighborhood cohesion
  - Consistency with local transportation plans
  - Consistency with air quality plans, noise standards and federal or State water standards
  - Conservation and preservation, general ecology, wildlife and waterfowl areas, wetlands or base flood plains
  - Disturbance of hazardous materials
  - Public facilities and services, including park and recreational facilities, natural or man-made historic places, religious, educational facilities, public utilities, fire protection and other emergency services
  - Aesthetic and other values, including visual quality, such as view of the road and view from the road, natural landmarks, and joint development and multiple use of space
  - Public access to rivers over which a new bridge may be constructed
  - Displacement of people, businesses and farms, including relocation assistance, right-of-way requirements, schedule of acquisition, housing availability, and the Relocation Assistance Program. (Questions about individual parcels should be answered during recess or immediately following the meeting, if possible)
  - Other issues that may be associated with the proposal

Handouts

Handouts are important for open houses, especially those being used as public hearings. Individuals should be given written handout material outlining the basic problem being solved, the process for solving it, the alternatives being proposed, and how individuals may provide additional comments. Handouts should cover the same material as outlined previously for presentations. Handouts may also be required in alternative formats to aid those individuals with disabilities and in a foreign language for non-English speaking individuals.

Comments

There should always be a comment table to which individuals are invited to make written or oral comments.

Publicity

Purpose, agenda, time, and place are advertised and announced to those who may care to attend. The media is invited. If invitation letters are to be sent to legislators, city councils, etcetera, see sample invitation letters in Appendix HH – Public Involvement. All publicity should be coordinated with the district public information office.

Considerations

A "give and take" atmosphere is central to the open house format. Caltrans' staff members should fully understand the project, since questions will be highly detailed. Caution must be taken not to mislead the public into thinking that the most popular alternative will be chosen.

Formal Meetings

Definition

Formal meetings are usually in auditorium-style settings where Caltrans staff make formal presentations, often using maps, charts and graphs, after which members of the public are invited to make presentations or ask questions.

Applicability

Formal meetings may be used to provide or receive information from affected interests.

Format

In formal meetings, Caltrans personnel are situated at the front of the auditorium; members of the public are seated in rows facing them. Typically, Caltrans staff present information about the proposed project, then members of the public are asked to comment. Often, slides, overhead projections, or films are used to present information. A microphone is provided so that members of the public may ask questions or make statements. Displays may be placed around the outside of the room for viewing.

The meeting should follow a formal agenda.

Displays

Displays should clearly and prominently advise the public of the purpose of the project and the purpose of the meeting.

Presentations

Formal presentations should follow the format discussed previously in the Sub-article "Open Houses."

Publicity

Usually, because of the informational purpose of formal meetings, they are given the widest possible publicity. Contact the district public information office for assistance in issuing announcements.

Considerations

If issues are especially controversial, formal meetings are often attended mostly by project critics. The physical layout of formal meetings may result in a "We versus They" situation, which gives the impression that the majority of a community is against the project, even though that may not be the case. When holding a formal meeting, have a clear understanding of the issues and include this as part of the Caltrans presentation, so that those in the audience are assured that their thoughts and feelings are taken into account in project planning.

Informal Informational Meetings

Definition

An informal informational meeting is one that is held with an individual, group, association, business, or other social unit having a direct interest in a project. It is held in a place that is convenient to the group.

Applicability

Informal informational meetings are useful for identifying issues, establishing credibility, and achieving a sincere and open exchange of information, with the potential for reaching acceptable solutions.

Format

Informal informational meetings should be limited to fewer than a dozen people. The meeting may be chaired by Caltrans or by someone outside of Caltrans. Either way, the Caltrans representative will usually be asked to make a presentation and answer questions.

Presentations

Follow the rules for presentations under Sub-article "Open Houses."

Publicity

Informal informational meetings should be publicized only to participants, since by their nature, their purpose is a frank and open exchange of information, with the potential for actual negotiations.

Handouts and Displays

Handouts and displays should be very informal, even casual. Assure that maps are timely and of adequate quality to illustrate the project proposal. See the description for handouts and displays under Sub-article "Open Houses."

Official Record

Summarize the discussion in a memorandum to file. To assure understanding, send a copy of the record of the discussion to those in attendance.

Considerations

These meetings can provide useful exchanges of information, provided they are conducted properly. Listen sympathetically to the concerns of those attending and try to see the project proposal through their eyes, but make it clear that Caltrans may not be able to satisfy everyone's concerns.

Working Meetings

Definition

Working meetings involve as many as a dozen people working together on issues. Most PDT meetings use this format.

Applicability

Working meetings are useful for identifying problems, articulating key issues, and searching for consensus. They focus on work to be accomplished, and are useful for resolving issues.

Format

The project manager (PDT leader for PDT meetings) should chair the meetings. An agenda should be established, either orally or in writing, and all participants should be aware of it. The order in which the agenda items are taken may be significant, depending on whether or not it helps resolve the issues in question. If so, the person who called the meeting has to see to it that the agenda is followed. Generally, no more than a dozen staff-level people should attend. Business proceeds informally, not by parliamentary rules.

Publicity

Working meetings are publicized only to participants.

Considerations

If the views or goals of some participants are so different and incompatible that it threatens the group's work, the group must focus on areas where they have something in common. Try to expand areas of agreement by building them into larger areas of overlapping views.

Open Meetings

Definition

Open meetings are working meetings conducted in public.

Applicability

Issue resolution in an open meeting is extraordinarily difficult but possible, with careful planning. Open meetings can be useful where there is distrust of Caltrans and its processes.

Format

Participants in the meeting work together in public. The PDT leader should chair the meeting or, if the issues are controversial, a neutral moderator may be used to assure that the agenda is followed or that deviations from it have group consensus.

Publicity

Purpose, agenda, time, and place are advertised and announced to those who may care to attend.

Considerations

Open meetings require skill in public negotiation: an extremely difficult process. If the audience is large and emotional, open meetings can degenerate—with participants playing to the crowd.

When planning an open meeting, assure that there is an objective process to resolve issues. The decisions reached when resolving issues should never be predetermined, and the process should be easy to follow. It is wise to seek counsel from a skilled negotiator when planning an open meeting.

Forums

Definition

A forum is a public meeting held in a public place, where any individual, either from public agencies or the community, may state his or her views about the project.

Applicability

Forums are useful only for eliciting information from various interests, and for exposing interests to other views when there is no proposal to put forward. Forums do not accomplish a task or resolve an issue.

Format

Forums are held in auditorium-style settings. Affected parties are invited to make presentations and if necessary, Caltrans provides technical assistance. Persons in the audience may speak or provide comments in writing.

A respected, unaffected individual should moderate and be the only person facing the audience. Any Caltrans presentation should be short, precise, and accurate, so that the meeting can be turned over to community presenters as quickly as possible. Each person making a presentation, either from Caltrans or the community, should sit in the audience and return to it when the presentation is completed.

Publicity

Purpose, agenda, time, and place are advertised and announced to the general public. The media is invited. If invitation letters are to be sent to legislators, city councils, etcetera, see sample invitation letters in Appendix HH – Public Involvement.

Considerations

Forums have only one purpose: to acquire "community input" without the "We versus They" standoff characterized by some public hearings. Use a forum only if Caltrans is truly open to any solution and is seeking public input. Make it clear that the PDT may not use all the suggestions given in the forum.

Public Hearings

Public hearings are discussed separately in Chapter 11 – Public Hearing.

ARTICLE 7 Citizen Advisory Committees

Definition

Citizen advisory committees are usually made up of representatives of various groups or agencies of various levels of government likely to be affected by a project or proposal. They are distinctly different from technical advisory committees, in that their task is to express community opinion and concerns, not to provide technical expertise.

Applicability

If used properly, advisory committees can help to identify problems and articulate and clarify key issues. They should never be used as decision-making bodies, but rather, they should be clearly designated as advisory.

Format

It is appropriate for the project manager to chair the citizen advisory committee, although the project manager may choose a prestigious community individual as a co-chair.

- Try to keep membership in a citizen advisory committee to fewer than 20-25 persons. Interests may include neighborhood associations, business groups, environmental groups, agencies of government, institutions, advocacy groups for the disabled, and special interests.
- Citizen advisory committees should meet to comment about major project activities, such as choice of project alternatives to be studied, types of studies to be done, assumptions for traffic studies, environmental drafts, and etcetera.
- Since advisory committees are not decision-making bodies, they vote on procedural matters—never on the technical details of projects.
- Always plan citizen advisory committee meetings with a purpose in mind, expressed in an agenda.
- Informal meetings, formal meetings, working meetings, and open meetings are all formats that may be useful for citizen advisory committee meetings.
- In extraordinary circumstances, such as when the interests represented are extremely polarized, a citizen advisory committee may be formed, but may never meet. Each member simply provides written comment on plans or proposals individually.

Considerations

The role of the citizen advisory committee is to advise on community sentiment regarding projects and their aspects. Be very clear from the outset that while input is being solicited, Caltrans cannot always act positively on the advice received.

ARTICLE 8 Newsletters

Newsletter Use

As the project proceeds, the PDT will need to keep agencies, individuals, groups, institutions, advocacy groups and others abreast of project progress and current issues.

Face-to-face meetings are a clumsy and expensive way to keep a large community informed. Using personal computers and desk-top publishing, it is very easy to produce a one or two page newsletter, copy it on the office copier, and get it out

quickly. A monthly or quarterly publishing schedule is reasonable for a large scale, controversial project.

Newsletter Guidelines

- Most readers are lay people, not professionals. Without talking down, aim the writing to the lay readers. Use acronyms sparingly, only when they increase readability or eliminate clumsiness. Always define your acronyms in an easy to find location.
- If people are going to read the newsletter, it needs to contain real news. Place the most important news first. Follow with the less important or less timely information.
- It is not necessary to do a slick or fancy layout. In fact, readers are more likely to trust it if it is rather plain.
- Always do a spell check. Always check for factual accuracy.
- Never use the newsletter as a propaganda sheet. Report embarrassing developments with candor. If readers feel the newsletter is biased, it will lose its credibility.
- Newsletters may need to be prepared in alternative formats for individuals with disabilities and in a foreign language for non-English speaking individuals.

ARTICLE 9 Written Notification of Initiation of Studies

Mailed after Agreement on Study Process

Upon achieving agreement on the study process, the district must provide written notification of initiation of studies for Project Development Categories 1, 2, 3, 4A and 4B. Apart from Caltrans' policy, this is actually a statutory requirement of CEQA and NEPA. In the case of Project Development Categories 2B and 4B, there may be an agreement with the local agencies exempting specified types of projects from the notification process.

Mailing List

Written notices for Project Development Categories 1, 2, 3 and 4A are to be mailed to legislators, local governing bodies, agencies, and groups considered as mandatory contacts and to other interested agencies, neighborhood organizations, citizen groups, and individuals. Environmental Deputy District Directors should be consulted for

the most current distribution lists. They are also responsible for knowing who mandatory recipients are under CEQA and NEPA.

The district is to establish a notification list upon which any person, group, or agency may enroll. Written notices for Project Development Category 4B projects are sent only to affected local agencies and regional planning agencies, unless historic properties are present or suspected of being present; in such cases, notices need to be sent to local historical societies and Native American groups, as appropriate.

Notification Letter

Separate notification letters should be sent to all agencies considered mandatory contacts. On projects which other agencies are the lead agency for CEQA, a separate notice may also be sent as an intergovernmental review Notice of Intent printout from the clearinghouses. The two submittals serve different purposes.

Individual notifications contain more information and solicit comments and suggestions. The purpose of intergovernmental review is to provide comments to lead agencies on impacts (traffic, noise, air quality, and etcetera) their projects may have to Caltrans facilities under CEQA. No map is attached, nor is there room for much explanatory material.

Attachments

At a minimum, the notification letters should have a small scale map appended to clearly identify the location and limits of the study area. More detailed maps may also be appended to provide a better understanding of the proposal.

Sample Letters

Sample notification letters embodying pertinent content are provided in Appendix HH – Public Involvement. Letters should be modified to fit the project being considered, however much of the content of the letters is mandated by CEQA. Hence, deviations from the standard language presented in Appendix HH – Public Involvement should be reviewed and concurred with by district design and planning division chiefs.

One copy of each individual letter and one copy of each form letter with a mailing list is to be furnished to the Headquarters Division of Design attention: Chief Office of Project Development Procedures, for information. In Sample Letter #4, please note the additional paragraph required to a city or a county that is participating, or

planning to be a future participant in the National Flood Insurance Program administered by the Federal Emergency Management Agency. For more information on wetlands and floodplains, see Chapter 8 – Overview of Project Development, Section 7.

Activated Projects Need New Notices

When resuming studies on a project that has been inactive for an extended period of time, particularly when this involves initiation of data gathering for the environmental document, a new notification of initiation of studies letter should be sent to the various agencies. When this involves an already adopted route, the notification would be to the effect that design and environmental studies are being resumed or undertaken.

ARTICLE 10 Media Relations

Staff Interaction with Media

Project development personnel and other staff members may deal with the media as long as there is prior planning with the appropriate public information office for each and every contact with the media.

On occasion, a Caltrans employee may receive an unanticipated call from a media person. If the subject of the call is controversial, the call should be referred to the public information office. If this is impossible, the employee should inform the public information office of what occurred during the call.

Working Relationship with Key Reporters

It is critical to have a good working relationship with key reporters in any area affected by a project. If the project is a major one, it may be one of the most important news stories in the community and will be the subject of news coverage. If the relationship with the media is poor, that coverage can kill the project.

Most media take their public service role very seriously and are likely to respond sympathetically if approached with a sincere, honest, and unbiased need to communicate with the public.

Initial Meetings with Media

To prepare for future coverage of the project, request an early editorial board meeting with each media organization. Media organization representatives should include: an editor responsible for assigning news coverage, a reporter whose regular beat would be to cover the project, and if possible, a publisher or editorial writer. Caltrans should be represented by a public information officer and the project manager.

The following should be communicated at the meeting:

- The problem being addressed is serious.
- Caltrans is the appropriate agency to deal with the problem.
- The project development process is fair and reasonable.
- Caltrans will pay attention to (not necessarily act on) community comments.

Reporting Strategies

Suggestions follow for building an ongoing relationship with key reporters.

- Ask the appropriate media to do a series of stories on the key issues likely to come before the public.
- Develop reasonably good background studies on complex issues and illustrate them well. Do not provide a one-sided picture or hold back potentially embarrassing information.
- Be the most convenient, and the most unbiased source of information for key reporters.
- Always put information in its proper perspective. Make the meaning of any announcement clear by giving sufficient background information.
- Be concise. Send a few short, well-presented messages rather than a big, complex, combined message.
- Clearly distinguish fact from opinion. While opinions or ways of interpreting certain facts can and should be communicated, be careful not to label opinions as facts.

Use Public Information Office

News releases—Information for publication in a newspaper should be prepared by the district public information office.

Public notices—Public notices are discussed in Chapter 11 – Public Hearing, Article 2 and Appendix HH – Public Involvement.

CHAPTER 23 – Route Adoptions

Table of Contents

CHAPTER 23 – Route Adoptions 23-3
ARTICLE 1 General 23-3
Legislative Statutes 23-3
California Transportation Commission Policy on Route Adoptions 23-3
Need for Route Adoptions 23-3
Criteria for New Alignment 23-4
CTC Action 23-4
Route Adoption Map 23-5
Route Adoption Process 23-5
Deviations from the Route Adoption Map 23-5
Engineering Reasons for Deviations 23-6
Deviations in Rural Settings 23-6
Deviations in Urban Settings 23-6
ARTICLE 2 Freeways 23-7
Freeway Definition 23-7
Controversial Projects Need Public Hearings 23-7
ARTICLE 3 Controlled Access Highways 23-7
Denomination to Controlled Access Highway 23-7
Guidelines for Denomination 23-8
ARTICLE 4 Conventional Highways 23-9
Access Rights 23-9
Local Agency Concurrence 23-9
ARTICLE 5 Traversable Highway, Transfer of Highway Location 23-9
Adoption as Traversable Highway 23-9
Transfer of Highway Location 23-11
ARTICLE 6 Temporary Connections 23-14
Temporary Route Adoptions Require
California Transportation Commission Action 23-14
State Responsibility 23-14
Temporary Connections on New Alignment 23-14
ARTICLE 7 Route Redesignation 23-15
General Redesignation Discussion and Examples 23-15
Procedures for Redesignation 23-16
ARTICLE 8 Modification to Adopted Route Locations 23-16
General 23-16
Formal Reopening Process 23-17

Need Resolution from Local Agency 23-17
Feasibility Studies to Headquarters Division of Design and California Transportation Commission 23-18
Informal Reopening Process 23-18
ARTICLE 9 State Route Rescission Process 23-18
General 23-18
Rescission Criteria 23-19
Review with Local Agencies 23-19
Initiation of Rescission 23-19
Rescission Procedures 23-20
Conditional Retention of Route Adoption 23-22
ARTICLE 10 Deletion from Freeway and Expressway System 23-24
Results of Legislative Deletion 23-24
State Still Shares Route Responsibility 23-24
Case-by-Case Basis 23-24
Division Responsibilities 23-24

Table of Figures

FIGURE 23-1 Example of New Alignment 23-4
FIGURE 23-2 Example of a Route Redesignation 23-15
FIGURE 23-3 Example of a Route Redesignation 23-16
FIGURE 23-4 California Transportation Commission Freeway Route Rescission Process 23-23

CHAPTER 23 – Route Adoptions

ARTICLE 1 General

Legislative Statutes

The California State Legislature establishes the framework for the State Highway System (SHS) by describing each route in the Statutes (*California Streets and Highways Code*). This description establishes the termini of the route and, in some cases, intermediate control points. Selection of the location of each of the routes has been delegated to the California Transportation Commission (CTC). The specific location, however, must conform to the route description in the Statutes. (*California Streets and Highways Code*, Section 75 empowers the CTC to "Select, adopt, and determine the location of State highways on routes authorized by law".)

California Transportation Commission Policy on Route Adoptions

Route adoption usually will occur at a regularly scheduled CTC meeting following approval of the environmental document. In these instances, there normally is a consensus of the community as to route location, and the adoption usually follows a routine process. CTC route adoption action with accompanying *California Environmental Quality Act of 1970* environmental documentation is taken to the CTC prior to submittal to the FHWA for compliance with the *National Environmental Policy Act of 1970* and project approval. Where there are no alternatives, these actions can be concurrent.

Need for Route Adoptions

Route adoptions are needed for:

- A new alignment for an existing route.
- Establishment of a location for an unconstructed route.
- Conversion of a conventional highway to a freeway or a controlled access highway.
- Designating a traversable highway.
- Temporary connections.

Criteria for New Alignment

An alignment is considered new when additional right-of-way is required that is not substantially contiguous with the existing highway right-of-way, see Figure 23-1. "Substantially contiguous" cannot be precisely defined because of varying conditions attendant to each particular site. There is more latitude for deviation to make engineering safety improvements in a rural undeveloped situation affecting only one or few property owners who agree with the proposed plan. There is little latitude for deviation in urban or developed situations and in cases where there would be substantial environmental impacts. An alignment is also considered new under the following conditions:

- There is no route adoption map for the existing segment of highway.
- The existing highway to be replaced is to be relinquished to the local agency.

FIGURE 23-1 Example of New Alignment

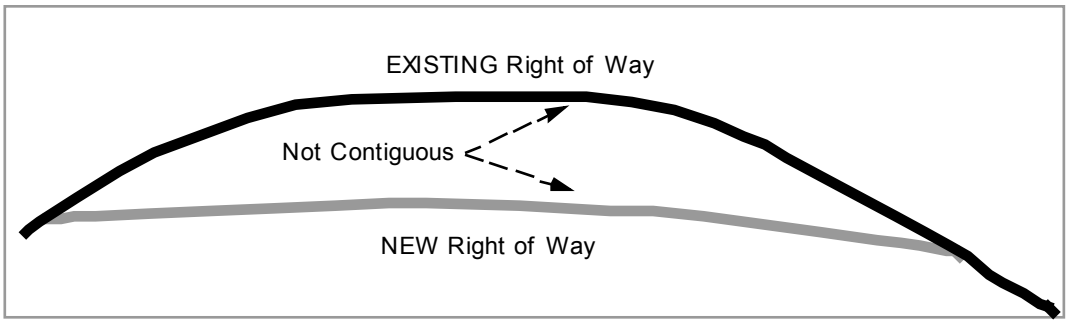

CTC Action

The action of the CTC in adopting a route location consists of certifying a map reproducible showing the plan location of the route by a single heavy line and passing a written resolution describing the route adoption. The documents that are prepared for the CTC to consider a route adoption are collectively called a Route Adoption book item. The Route Adoption book item includes a:

- report to CTC (recommended action).
- resolution.
- location map.
- route adoption map.

Route Adoption Map

The route adoption map is basically the same for conventional highways, freeways and controlled access highways except for title block data. The route adoption resolution for a freeway or controlled access highway will contain additional clauses declaring the route a freeway or controlled access highway and designating it a part of the Freeway and Expressway System, if applicable. The importance of correctly delineating the general alignment of the highway location on route adoption maps cannot be overemphasized. The map must be in conformance with the display map presented at the public hearing. See the *Plans Preparation Manual* for guidance on map preparation.

Route Adoption Process

After completion of the Project Approval and Environmental Document (PA&ED) phase, the district contacts the Headquarters Division of Design for assistance with the route adoption process. After contact has been made, the district must provide a copy of the approved project report (PR) and all of the draft documents (report to CTC, location map, and route adoption map) for the Route Adoption book item in appropriate electronic formats. Note that the district only provides the information for the background section for the report to CTC.

Headquarters Division of Design finalizes the report to CTC, prepares the resolution, and incorporates the district supplied final route adoption map (polyester reproducible) and location map for the final Route Adoption book item.

Upon CTC adoption, an electronic copy of the route adoption map and certified copies of the resolution are forwarded to the district by Headquarters Division of Design. The district sends a certified copy of the resolution together with a print of the map to each city and county involved.

After adoption, route adoption maps are not to be altered in any manner unless the signatures and certifications are removed first.

Deviations from the Route Adoption Map

Minor deviations from the alignment location shown on the route adoption map are allowable only for engineering reasons, with the concurrence of the Headquarters Project Delivery Coordinator. Documentation for the project file must be prepared for any such engineering modification. Legal opinions have concluded that

modifications to settle controversies, conform to revised general plans, meet political requirements, etc., are not modifications for engineering reasons. A copy of the documentation for the engineering modification should be sent to Headquarters Division of Design, Attention: Route Adoption, including reasons for the change and the Headquarters Project Delivery Coordinator's concurrence.

Major deviations from or modifications to adopted route locations would require reopening of route studies and a new route adoption. See Article 8 "Modification to Adopted Route Locations."

Engineering Reasons for Deviations

Examples considered to qualify as "engineering" reasons are: shifts to avoid slide or unstable areas; curve corrections for safety reasons; modifications to reduce earthwork, structure, or drainage costs; shifts to avoid or minimize impacts on archaeological sites or wildlife nesting areas; etc. The degree of latitude in making minor modifications will vary depending on the circumstances.

Deviations in Rural Settings

In rural undeveloped terrain, an engineering modification may deviate from the "adopted" line by as much as 1000 feet or so, provided the impact on affected property owners is not significantly different. This also assumes that any adverse environmental impacts of the highway will not be substantially increased. A shift that affects a property owner not previously involved on the adopted route would not be allowable unless the written concurrence of the property owner is obtained.

Deviations in Urban Settings

In urban areas, the latitude for modifications is considerably more restrictive. Even small shifts can affect new property owners physically or have different impacts such as increasing noise. Generally, little deviation from what was shown at the public hearing is allowable from a design standpoint. The generally small scale of the route adoption map in itself may cover several design variations. Thus, recycling of the public hearing and environmental document may be required from a design standpoint but not from a new route adoption standpoint.

ARTICLE 2 Freeways

Freeway Definition

California Streets and Highways Code, Section 100.3 provides for establishment of freeway route locations by the CTC. *California Streets and Highways Code*, Section 23.5 defines a freeway as a highway in respect to which the owners of abutting lands have no right or easement of access to or from their abutting lands or in respect to which such owners have only limited or restricted right or easement of access. As previously noted, a route is adopted as "A Freeway" by the map title block and by a "freeway declaration" clause in the resolution. If an existing adopted conventional highway is proposed to be converted to a freeway on the same basic alignment, the Project Development Category 1 process must be followed throughout in obtaining a freeway declaration or a freeway route adoption.

Controversial Projects Need Public Hearings

Where there is controversy over the route location, Caltrans may request the CTC to hold a public hearing. Depending upon the issues and extent of the public controversy, the hearing might be held as part of a regularly scheduled CTC meeting or as a special hearing in the community. The CTC hearing would be held after the Caltrans hearing called for in Project Development Category 1 projects but before finalizing the environmental document.

At the conclusion of the hearing, the CTC would give Caltrans direction for the preferred alternative as the basis for finalizing the environmental document and subsequent submittal to the CTC for formal route adoption action. Since the Caltrans hearing called for under the Project Development Category 1 process is not mandatory, the requirement for public involvement may be satisfied by a Notice of Opportunity.

ARTICLE 3 Controlled Access Highways

Denomination to Controlled Access Highway

California Streets and Highways Code, Section 23.5 also states that if in the judgment of the CTC or the Caltrans director, the public interest would be advanced thereby, a freeway as defined herein may be denominated a "controlled access highway". In all other respects said "controlled access highway" shall be subject to all provisions of this code pertaining to freeways. A route may be adopted as a "controlled access

highway" by substituting this nomenclature for "freeway" in the route adoption map title block and in the resolution.

The discussion of CTC roles in Article 2 "Freeways" also applies to controlled access highway where the issues are comparable. The degree of involvement of the CTC is to be discussed between the district and Headquarters Division of Design.

Guidelines for Denomination

Since the public generally associates the term "freeway" with multilane construction and interchanges, designation as a "controlled access highway" should be used for lesser-scale expressway development not anticipated for conversion to full freeway during the 20-year design period.

In particularly sensitive areas, it may be desirable to designate certain highways as controlled access highways. These are special cases and should be brought to the attention of the CTC.

The district's recommendation to designate a "controlled access highway", rather than a "freeway", should be included in the PR with a full explanation of the decision.

At public hearings where the alternative designation is proposed for the route in question, it should be made clear that all provisions pertaining to freeways also apply to "controlled access highways". Such a route would be adopted by the CTC as a "controlled access highway" and a "controlled access highway agreement" would be executed rather than a freeway agreement.

Where it is desirable to use the term "controlled access highway" for a route initially adopted as a freeway, the district should submit to Headquarters Division of Design, Attention: Denomination, an appropriate request and supporting data for denomination as a "controlled access highway". Headquarters Division of Design handles the denomination and will forward the approval to the district. Subsequent to denomination, a superseding controlled access highway agreement should be executed. See Chapter 24 – Freeway Agreements.

If it is decided to revert to the freeway declaration at a later date, the Director of Caltrans can withdraw the denomination of the freeway as a "controlled access highway". The Headquarters Division of Design Division Chief has the delegated authority of "denomination", "withdrawal of denomination" and other decisions affecting route adoptions.

ARTICLE 4 Conventional Highways

Access Rights

A conventional highway is a route on which the CTC has not made a "freeway" or "controlled access highway" declaration. Private access rights are generally not acquired.

The Article 2 "Freeways" discussion of the CTC role in route adoption or in controversies applies to conventional highways where issues are comparable. The degree of CTC involvement is usually determined through discussion between the district and Headquarters Division of Design.

Local Agency Concurrence

A conventional highway route adoption is typically a relatively minor revision to improve safety or operational conditions. Nevertheless, it is still necessary to seek the concurrence of any involved local agency in the proposed route adoption. This concurrence must include their agreement to accept relinquishment of any superseded segments needed for continued public access to properties.

ARTICLE 5 Traversable Highway, Transfer of Highway Location

Adoption as Traversable Highway

If the California State Legislature adds a new route to the State Highway System that coincides with an existing local road, and if that route meets certain requirements as specified in *California Streets and Highways Code*, Section 81, Traversable Highways, the CTC will adopt the local road as the State highway.

Headquarters Division of Research, Innovation, and System Information - Traversable Highway Report

The Headquarters Division of Research, Innovation, and System Information is responsible for canvassing the districts annually, maintaining a file on the status of the traversable highways, and developing the Traversable Highway Report. The Headquarters Division of Research, Innovation, and System Information-Office of Transportation System Information and Performance should be contacted to get

advice on procedures for the adoption of a traversable route, preparation of the report covering the proposal, and Caltrans assumption of maintenance. Since route adoption of a traversable highway has effects on Caltrans resources, the Headquarters Division of Maintenance, Headquarters Division of Traffic Operations, and Headquarters Division of Design must be involved in the action. The facility must be brought up to State highway standards before assumption of maintenance is considered.

Report to District Director

The Office of Transportation System Information and Performance should be contacted for guidance on the report content. The report should describe the condition of the facility and any work necessary to bring the condition up to standards that reasonably satisfy State highway traffic requirements. The report usually includes the following information:

- Description of highway
- Map
- Geometric features - log by odometer listing the geometric cross-section, vertical and horizontal alignment, pavement type, structural section (if known), structural condition, intersections, present traffic volumes, and an estimate of future traffic volumes
- Representative photos showing the condition of road
- Right-of-way status: fee, easement, or prescriptive rights; fenced or open range; monumentation, if any; available mapping
- Planned local agency repair work
- Estimated expected annual State maintenance (person-years and dollars)
- Impact of assumption of maintenance on district maintenance
- Discuss any anticipated rehabilitation (next five year period)
- Recommendation on appropriateness of State assumption of the facility as a State highway
- Copy of route adoption map reproducible to be submitted to Headquarters Division of Design

The existing State highway facility and the conditions along it should also be summarized. Advantages and disadvantages to State highway traffic on the relocation facility should be analyzed.

Following joint concurrence and recommendation by the Headquarters Division of Research, Innovation, and System Information, Headquarters Division of Transportation Programming, and Headquarters Division of Traffic Operations, and

approval of the concept by the Chief Deputy Director, Headquarters Division of Design finalizes the proposed resolution and incorporates all the district supplied pieces for the final Route Adoption book item.

Traversable Highway Route Adoption Documents

The Route Adoption book item documents for traversable routes are the same as for conventional highways. However, there are no requirements for hearings or environmental documents; nor does this process fall under one of the seven project categories. This is because no improvement work is involved nor is any change expected in traffic usage. The adoption action essentially transfers maintenance responsibility from the local agency to the State.

Transfer of Highway Location

Occasionally a local agency will desire that an existing conventional State highway be moved to a parallel local street or road. A reason may be that a shopping mall is proposed on the existing route and rerouting of State highway traffic is necessary to accomplish this objective. The local agency is responsible for providing a substitute facility in a state of good repair capable of accommodating the State highway traffic added by reason of the change. Although the State will not be involved in any improvements on the local street to be adopted, a public hearing and an environmental document is necessary in most cases. This is because the changed pattern of traffic could place more vehicles through residential areas or close to schools or other sensitive land uses. The local agency requesting the change in highway location is responsible for complying with hearing and environmental requirements.

Caltrans will consider a local agency request for transfer of a State highway location from one existing facility to a parallel or nearby facility when the substitute facility (1) provides an acceptable level of service without undue circuity of travel, (2) does not require restoration by the State, (3) is environmentally acceptable, and (4) meets Caltrans design standards. Exceptions will be considered if the substitute facility equates to or exceeds the standards of the existing State facility.

The districts should use the following general guidelines when a local agency requests transfer of a highway location from one existing facility to another:

Joint Field Review

Notify Headquarters Division of Design, Attention: Highway Location Transfer, in writing as soon as possible after receiving the request and initiate a joint review with the appropriate Headquarters units to assess the potential suitability of the substitute facility to accommodate State highway traffic. The criteria for suitability should include the determination that no restoration work is necessary, that the local facility has no circuity of travel, that its standards will reasonably satisfy State highway traffic requirements, that the statutory definitions for State highways are satisfied, and that there is no need for capital outlay.

Transfer Requirements

Considering the results of the joint review, discuss with the local agency the steps and general procedures to be followed with particular emphasis on the following:

- Caltrans will not make any physical adjustments to the existing State highway facility to accommodate local agency standards, signing or striping. If Caltrans considers the facility inadequate and has included improvements in an approved programming document, Caltrans will pursue completion of the planned improvements until the facility is relinquished to the local agency.
- The local agency is responsible for providing the substitute facility in a state of good repair adequate to accommodate State highway traffic. Caltrans will usually not be involved in any improvements of the local facility to be adopted.
- A public hearing and environmental document may be required because the changed pattern of traffic could expose residential areas, schools, or other sensitive land uses to increased traffic. The local agency requesting the change in highway location will be responsible for and will bear all costs in complying with any necessary hearing and environmental requirements.
- Relinquishment of the existing State highway facility to the local agency and State assumption of maintenance of the substitute facility must occur simultaneously.

Transfer Report

Develop and submit to Headquarters Division of Design, Attention, Highway Location Transfer: one copy of a report discussing the suitability of the local facility for CTC adoption and State maintenance, and a polyester reproducible of the route adoption map. The report should describe the condition of the facility and any work necessary to bring its condition up to standards that reasonably satisfy State highway

traffic requirements. As a minimum, the report should include information listed under the heading "Report to District Director," earlier in this article.

The existing State highway facility and the conditions along it should also be summarized. The advantages and disadvantages of the proposed relocation to State highway traffic should be analyzed. A discussion of any environmental and public hearing processes the local agency has conducted or proposes to undertake should also be included.

Deficiency Corrections by Local Agency

If the local facility has deficiencies that preclude State maintenance, the district should notify the local agency of the deficiencies that must be corrected. If the deficiencies are minor and the local agency agrees to correct them within a reasonable time, the district should obtain a commitment resolution by the local agency, including an approximate date of completion.

Upon receipt of this resolution and completion of the environmental and hearing processes, Caltrans will process adoption of the route as described in the following text. State maintenance of the local facility cannot be recommended, however, until the corrective action has been completed.

Local Agency Resolution

If the local facility satisfies the definition of a State highway and is suitable for State maintenance, the district should obtain a resolution from the local agency requesting the change and agreeing to accept the existing State highway. The resolution should also agree to waive the 90-day waiting period in connection with the relinquishment so that the route adoption and relinquishment can be processed simultaneously. In line with normal practice, the local agency must complete the public hearing and environmental processes prior to adopting the resolution.

Recommendation to CTC

Following completion of the public hearing and environmental processes and receipt of the local agency's resolution, Headquarters Division of Design finalizes the proposed resolution and incorporates all the district supplied pieces for the final Route Adoption book item. This recommendation will state the effective date for the transfer of responsibilities.

Final Transfer Actions

When the local facility is adopted by the CTC, Headquarters Division of Design will notify the district and will forward a certified copy of the resolution and an electronic copy of the signed route adoption map. The district should then notify the local agency. The filing of a certified copy of the resolution or CTC order with the local authority is sufficient notice of CTC action.

ARTICLE 6 Temporary Connections

Temporary Route Adoptions Require California Transportation Commission Action

Temporary adoption of a local road system as a traversable State route is a CTC action. For example, CTC adoption is used where one unit of freeway construction has been completed and through-traffic is routed over the new roadway while the next unit is being constructed, and use of local roads is necessary to connect the freeway with the old State highway. See *Highway Design Manual* Index 106.2(2) for additional information.

State Responsibility

The route adoption is on a conventional highway basis. This action transfers maintenance and liability jurisdiction to the State until formally relinquished. Hearing and environmental requirements may have been met as part of the overall freeway development process. If not, an environmental study should be made to determine the impacts of placing State highway traffic on the local streets. At a minimum, assuming there are no environmental impacts, the concurrence of the local agency must be obtained prior to presentation to the CTC for route adoption.

Temporary Connections on New Alignment

It may be necessary to construct a temporary connection on new alignment pending completion of the next freeway unit. If this was not covered in the overall freeway public hearing and environmental process, the applicable portions of Project Development Category 2 process must be followed. Since these are time consuming, it is important that this need be recognized early, and preferably be covered in the overall project procedures.

ARTICLE 7 Route Redesignation

General Redesignation Discussion and Examples

Route redesignation occurs when an existing route number is changed to a new route number. This type of CTC action is usually required when a nearby route is being relocated. The project report for the route being relocated should address the needed redesignation of portion the other route. Figure 23-2 shows an example of a route redesignation.

In Figure 23-2 the existing Route A provided continuity for a second route, Route B. On its relocation, existing Route A would be relinquished, thus leaving a gap in Route B. The segment of existing Route A that is needed for continuity would be redesignated Route B.

FIGURE 23-2 Example of a Route Redesignation

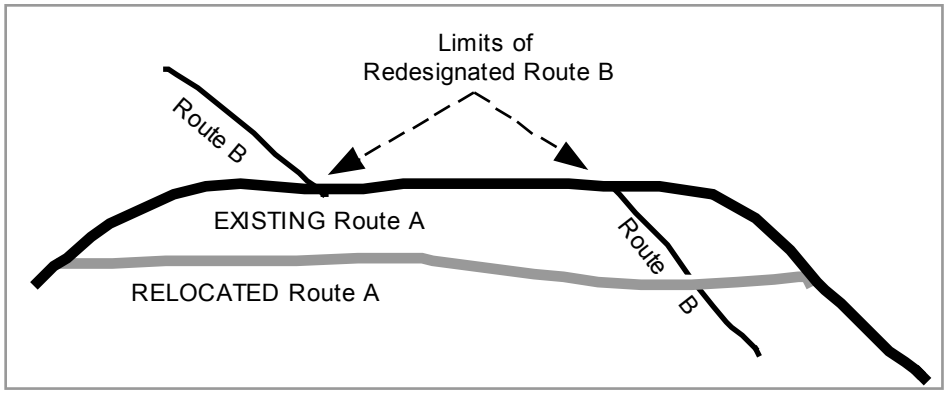

Figure 23-3 shows another application for a route redesignation. When Route C is relocated and the legislative description of Route D calls for Route C as its terminus, a portion of existing Route C is redesignated as Route D to fulfill the legislative description.

These examples may need for some legislative action to be taken to clean up the legislative route description. If so, the Headquarters Division of Research, Innovation, and System Information-Office of Transportation System Information and Performance should be notified to initiate the change.

FIGURE 23-3 Example of a Route Redesignation

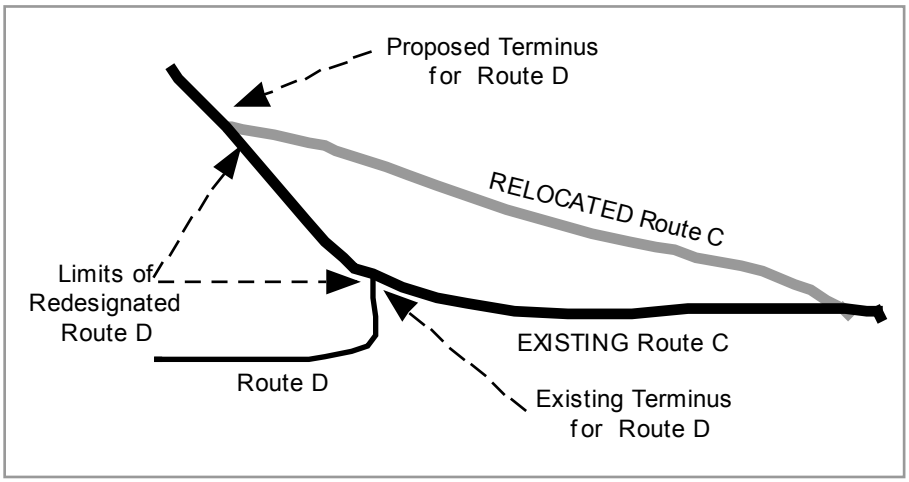

Procedures for Redesignation

The district prepares a reproducible map and submits it to Headquarters Division of Design, Attention: Redesignation, with the approved project report of the relocated facility. Headquarters Division of Design will process the request through to the CTC. The redesignation is presented to the CTC at the time of completion of construction of the relocated facility.

ARTICLE 8 Modification to Adopted Route Locations

General

The route location of an adopted but unconstructed freeway route may be modified by a formal reopening of route studies, which voids the prior route adoption, or by new studies that are conducted with the route adoption still in place. In the latter case, alternatives would be evaluated, but the CTC could choose to reaffirm the adopted routing.

New route studies can be requested by a local agency for local planning reasons or be initiated by Caltrans for engineering reasons (i.e., stability problems, costs, etc.).

Although the procedures discussed herein for alternative route studies were developed to consider changes to unconstructed freeway locations, any changes proposed for

major conventional highway route adoptions on a new alignment should also follow these processes.

"Reopening Route Studies" is a formal CTC action. The request for such action can be to consider a specific alternative or to consider all alternatives to the adopted location. Although a suggested alternative is not mandatory, the request should demonstrate that there are feasible alternatives. It is the policy, in cases where the reconsideration is requested by a local agency, that all other affected governing bodies concur in the request to reopen studies (including adjacent local agencies receiving secondary effects).

Formal Reopening Process

The action of the CTC in formally reopening route studies, in effect, "wipes the slate clean". Routing studies are reinitiated following all steps in the process for Project Development Category 1 projects. The prior route adoption no longer has any force or effect.

Because formal reopening of studies returns the project to "Stage Zero", this step should not be undertaken unless there is assurance there is a feasible alternative to the adopted routing. When there is uncertainty, a preliminary feasibility study should first be made.

Need Resolution from Local Agency

A request from a local agency for reopening of route studies is usually sent to the Caltrans district in the form of a resolution addressed to the CTC. The resolution should describe the reasons for the request, accompanied by maps, as appropriate. The request is forwarded to Headquarters Division of Design, Attention: Reopen Route Studies, by the district, together with a summary of project planning and an analysis of the proposal.

If a route change is proposed by the district for engineering reasons, a similar request with supporting data is submitted to Headquarters Division of Design, Attention: Reopen Route Studies.

Feasibility Studies to Headquarters Division of Design and California Transportation Commission

Where a preliminary feasibility study is undertaken, the district must submit a report and recommendation to Headquarters Division of Design, Attention: Reopen Route Studies. In turn, Headquarters Division of Design will submit a report of the study to the CTC, together with a recommendation whether or not the route location matter should be formally reopened. If reopening of studies is denied, the local agencies involved and other interested parties are advised in writing of the CTC's decision by the District Director.

Informal Reopening Process

It is preferable to conduct additional route studies with the existing route adoption still in place. A supplemental draft project report/draft environmental document is prepared, the public hearing process is accomplished and environmental documentation is completed prior to requesting the CTC adoption of the revised location. This assumes a consensus on the new preferred alternative; otherwise the CTC would be also involved earlier as previously discussed in Article 2 "Freeways."

Where it is desirable to informally reopen studies, the Division Chief, Headquarters Division of Design, Attention: Reopen Route Studies, should be notified in writing, and a request should be made for concurrence in the study process.

ARTICLE 9 State Route Rescission Process

General

When adopted freeway routes having little potential for construction have been identified for possible rescission, a process is initiated in accordance with CTC policy. One rationale for a route rescission is that retention of an adopted route could subject the CTC to continued expense for acquisition of properties on a hardship basis. Continued existence of the route adoption may also create uncertainties in local planning.

If the route adoption were rescinded, funds realized from the sale of previously acquired hardship and protection parcels could be utilized for current State transportation needs. There may also be other reasons to initiate the rescission process.

Rescission Criteria

The following factors should be considered when deciding if a freeway route adoption should be retained or rescinded:

- Is the adopted location still valid?
- Is the adopted location locally accepted? Is it in conformance with the most recent local and regional plans?
- Is the route segment needed for system continuity to join adjacent completed or programmed segments? How would functional classification of the overall route be affected?
- Could an interim or alternative non-freeway improvement to the existing facility or on the adopted line provide a satisfactory level of traffic service for the reasonable future? Would any or all of the rights-of-way acquired to date be utilized in such a project?
- What has been the cost and extent of past right-of-way acquisition? What are the expected pressures for future hardship and protection acquisition?
- Is there future potential for the continued existence of freeway route adoption to retard community development or adversely affect property owners' ability to utilize or dispose of their investment?
- What would the economic impact of disposal of right-of-way be for the community and the State versus continued State ownership?
- Are there any local or regional planning studies under way, the results of which could have a bearing on existing route adoptions or concepts?

Review with Local Agencies

Unconstructed adopted freeway routes are candidates for rescission and should be periodically reviewed by the district and local agencies to determine if it is appropriate to rescind the adopted route and to dispose of any acquired rights-of-way. If rescission appears appropriate, the review is summarized by the district in a Route Inventory Report, using the format shown in Appendix II – Rescissions.

Initiation of Rescission

The district will summarize the route inventory report on each candidate route in a report to the CTC (book item) with a recommendation to either retain the route adoption or to consider the route for rescinding and disposing of acquired rights-of-way. Headquarters Division of Design will finalize the book item for the CTC.

The report will recommend that the CTC adopt a "Notice of Intent to Consider Rescinding" resolution. Current rescission procedures were adopted by CTC

Resolution G-15, found in Appendix II– Rescissions. The overall rescission process in Resolution G-15 is described in the following text.

Rescission Procedures

In essence, local, regional, and State agencies and the general public are notified of the CTC's intent to rescind and their comments are solicited. Following this, the CTC is presented with a report on the comments, together with a recommendation to proceed or forego the rescission. The CTC, at its own option, may schedule a public hearing before deciding on a final course of action.

The process is illustrated in Figure 23-4. Steps for implementing a rescission follow:

- District informally reviews the appropriateness of the route adoption with local and regional staffs and route adoption is determined inappropriate.
- District prepares and submits route inventory report to Headquarters Division of Design Division Chief, Attention: Rescission.
- Headquarters Division of Design coordinates Headquarters' review of the report.
- If it is decided to proceed, the district prepares the draft Notice of Intent to Consider Rescinding book item, and Headquarters Division of Design finalizes the book item for the CTC.
- The CTC acts on Caltrans' recommendation.
- If the CTC adopts a Notice of Intent to Consider Rescinding resolution, Headquarters Division of Design will inform the district to notify all affected local and regional agencies of the rescission proposal and ask the agencies for any additional pertinent information that might be helpful to the CTC in making a final decision. The notification should request comments, if any, to be submitted within 60 days.
  - Local agencies should be furnished copies of Caltrans' report and the CTC Notice of Intent to Consider Rescinding.

    The following additional language should be incorporated into the notification letters when rights-of-way have been acquired and are proposed for disposal:

    Should the route adoption ultimately be rescinded by action of the Commission, we will commence the disposal of the properties shaded in red on the enclosed maps in accordance with the provisions of *California Government Code*, Sections 54220 through 54226 and 54235 through 54238.6 and *California Streets and Highways Code*, Section 118.6. Pursuant to these code provisions, whatever portions of these properties that are not needed for exchange, sale back to former owners in

occupancy, sales to qualified tenants, or sales to adjoining owners, will be available for sale.

Please notify us within 60 days if your agency would be interested in purchasing any of these properties for public purposes.

- It is essential that agencies involved in planning and development of transit be included in the disposal notification.
- A notice of the intent to consider rescission is to be published in newspapers following the procedures used for public hearing notices. The notice is to include a map, a brief description of the proposal, and a closing date for written comments to be submitted to the District Director (closing date should coincide with the public agency period).
- Headquarters Division of Design will notify the State Clearinghouse in the Governor's Office of Planning and Research of the proposal so that State agencies can be notified.
- Upon expiration of the comment period, the district submits a memorandum to the Headquarters Division of Design Division Chief, Attention: Rescission, summarizing the comments and containing recommendations for proceeding with the process. Copies of the notifications and published notices should be attached to the memorandum. Copies should be attached of correspondence received from governmental agencies, organizations, and individuals.
- If rescission is appropriate, but the local agency desires to retain the freeway route adoption, a major commitment by the local agency to participate financially in right-of-way and/or construction would normally be a minimum requirement. Other positive planning actions by the local agencies would also be necessary.
- A determination whether disposal of any acquired rights-of-way is categorically exempt or requires an environmental document will be made on an individual parcel basis after CTC action rescinding the route adoption makes the property surplus.

- The district prepares the draft Rescission book item and location map, and Headquarters Division of Design finalizes the Rescission book item for final CTC action.
- The CTC could, at its option, schedule a formal hearing prior to taking final action. This hearing would be held after the comment period. It could be held either before or after Caltrans' follow-up recommendation.
- CTC decides to (1) retain freeway route adoption and protect right-of-way, (2) rescind route adoption and freeway declaration and authorize disposal of right-of-way, (3) as a CTC-approved special circumstance, rescind the freeway declaration (and any denomination as a "controlled access highway") and retain the route adoption location as a conventional highway for improvement, operation, and maintenance purposes, or (4) pursue any CTC-

approved special circumstances relating to recycling an adopted freeway location.

- District disposes of right-of-way.

Conditional Retention of Route Adoption

The initial report to the CTC on a route segment usually contains the recommendation to initiate recycling procedures. Resolution G-15 provides the option to conditionally retain the route adoption subject to the local agencies involved entering into a cooperative agreement or memorandum of understanding to assume responsibility for further hardship and protection acquisitions. A conditional retention would usually develop as a response to a "Notice of Intention to Consider Rescinding" resolution.

Resolution G-15 outlines the provisions for two options but allows for special circumstances. The concurrence of the CTC will be required in each case of a proposal to deviate from either Option 1 or Option 2.

Local agencies do not have an automatic option to proceed in accordance with Resolution G-15. The CTC must adopt a resolution on each route segment that is subject to the conditional retention provisions of Resolution G-15. It is also be acceptable to discuss the cooperative agreement and letter of understanding approach with local agencies during preparation of the original route inventory report.

FIGURE 23-4 California Transportation Commission Freeway Route Rescission Process

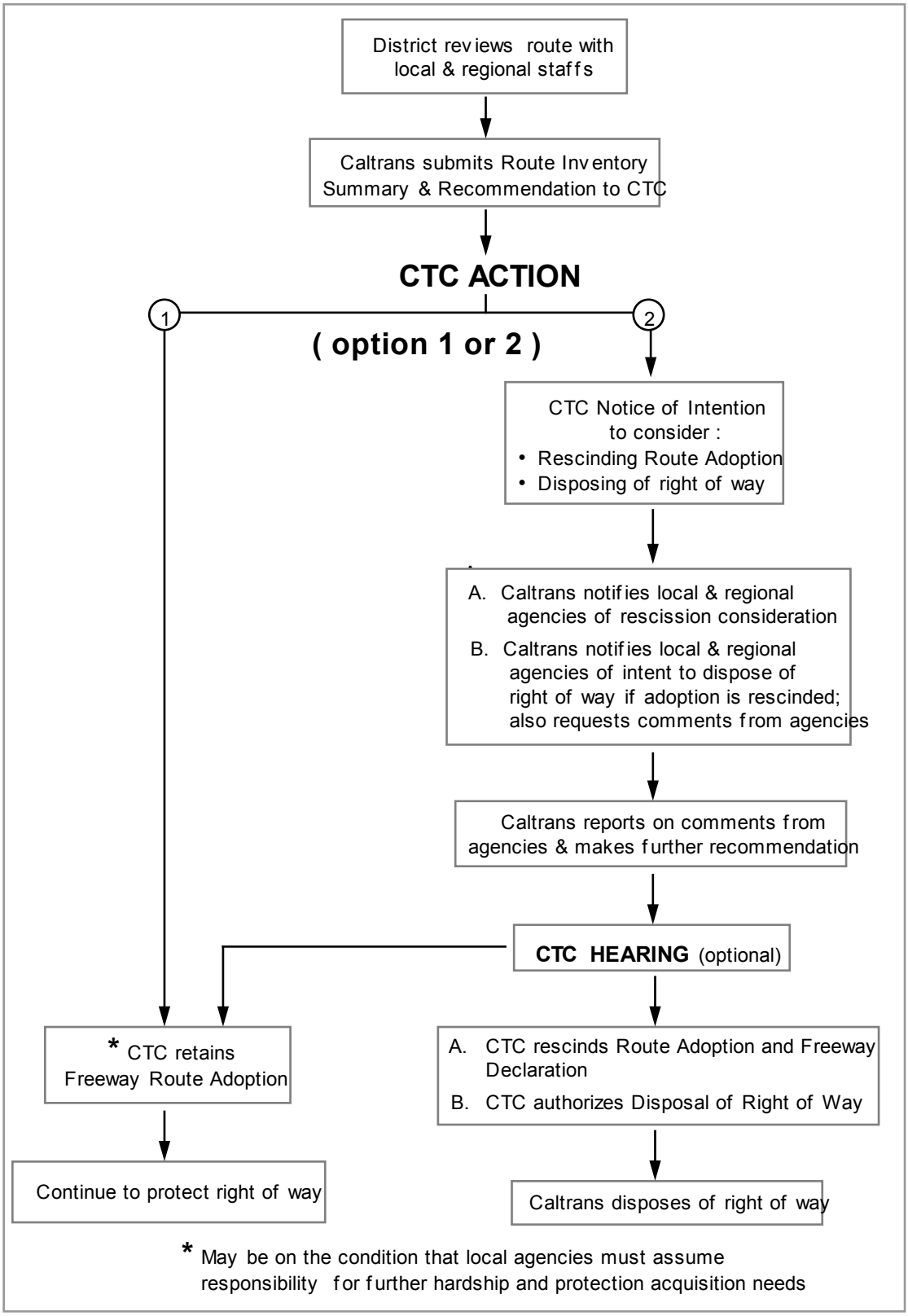

ARTICLE 10 Deletion from Freeway and Expressway System

Results of Legislative Deletion

Legislative action deleting a route or portion of a route from the California Freeway and Expressway (F&E) System:

- Causes any existing freeway declarations by the CTC on the route to be a nullity.
- Causes any existing freeway agreements by Caltrans within the limits of the deletion to be a nullity.
- Implies legislative direction that Caltrans shall not consider development of a freeway or expressway in the corridor.

State Still Shares Route Responsibility

If the route segment remains in the State Highway System, the State continues to share the responsibility for meeting the transportation needs in the corridor. However, in view of the limited funds available to the State Highway Account, the route adoption and any previously acquired rights-of-way should be considered for rescission and disposal unless there are overriding needs for non freeway or other transportation uses.

Case-by-Case Basis

Procedures for each deletion will be handled on a case-by-case basis. Headquarters Division of Design should be consulted regarding candidates for deletion.

Division Responsibilities

Deletions from the Freeway and Expressway System are the responsibility of the Headquarters Division of Research, Innovation, and System Information-Office of Transportation System Information and Performance. Headquarters Division of Design has the responsibility to prepare a report to the CTC recommending rescission of the freeway route adoption. The sale of State-owned resources is the responsibility of the Right of Way Division.

CHAPTER 24 – Freeway Agreements

Table of Contents

CHAPTER 24 – Freeway Agreements 24-3
ARTICLE 1 Introduction and Definitions 24-3
Introduction 24-3
Freeway/Controlled Access Highway 24-3
Definitions 24-4
ARTICLE 2 Laws 24-5
California Statutes 24-6
ARTICLE 3 Policies 24-8
General 24-8
Public Hearing 24-9
Freeway Agreements are Required for all Freeway Projects 24-9
New Public Road Connections to Freeways or Expressways 24-9
Conditions for Freeway Separation Structures or Interchanges 24-9
Federal Highway Administration Approval of
Access Control Modification on the Interstate System 24-10
Freeway Agreement Required Before Purchase of Right-of-Way or
Start of Construction 24-10
Avoid Changes to Freeway Agreement Template 24-10
Freeway Agreement Not Used for Financial Participation 24-11
One Freeway Agreement for Each Local Agency per Route 24-11
Certified Copy of Resolution with Authorizing Signature 24-11
ARTICLE 4 General 24-12
Maintenance Agreements 24-12
Relinquishment of Local Roads 24-12
Keep Freeway Agreements Current 24-12
California Environmental Quality Act and
National Environmental Policy Act Coordination 24-12
Declaration as Controlled Access Highway 24-13
Conformance to Adopted Route 24-13
Avoid Other Commitments in Freeway Agreements 24-14
ARTICLE 5 Essential Procedures 24-14
Processing Procedures and Sequence of Events for the
Freeway Agreement Execution Schedule 24-14
ARTICLE 6 Freeway Agreement Format 24-20
Types of Freeway Agreements 24-20
Follow the Templates 24-20

Special Clauses 24-21
ARTICLE 7 Freeway Agreement Exhibit Maps 24-21
Content of Exhibit Map 24-21
Types of Exhibit Maps 24-21
Exhibit Map Guidelines 24-22
ARTICLE 8 Resolutions of Change 24-27
Purpose 24-27
Resolution Details 24-27
Major Changes by Superseding Freeway Agreement 24-27
Major Change Definition 24-27
Minor Changes - Deferred Freeway Agreement 24-28
Resolutions for Minor Changes 24-28

Table of Figures

Figure 24-1 Sequence of Events for Freeway Agreements and Controlled Access Highway Agreements 24-19
Figure 24-2 Freeway Agreement Exhibit Map - Symbol 24-23
Figure 24-3 Freeway Agreement Exhibit Map - Geometric 24-24
Figure 24-4 Freeway Agreement Notes and Symbols Example 1 24-25
Figure 24-5 Freeway Agreement Notes and Symbols Example 2 24-26

CHAPTER 24 – Freeway Agreements

ARTICLE 1 Introduction and Definitions

Introduction

The freeway agreement documents the understanding between Caltrans and the local agency relating to the planned traffic circulation features of the proposed freeway or controlled access highway. It does not bind the State to construct on a particular schedule or staging. In the event that the facility is fully constructed, it shows which streets may be closed or connected to the facility; which streets and roads may be separated from the facility; the location of frontage roads; and how streets may be relocated, extended or otherwise modified to maintain traffic circulation in relation to the facility. Locations of railroad and pedestrian structures, as well as those for other nonmotorized facilities, such as bike paths, should also be shown. Freeway or controlled access highway agreements are often executed many years before construction is anticipated and they form the basis for future planning, not only by Caltrans but by public and private interests in the community. Any reference to an "expressway" in this manual has the definition of a "controlled access highway" attached to it.

Freeway/Controlled Access Highway

The discussions found in this chapter that use the term "freeway agreement(s)" also apply to "controlled access highway agreement(s)." The term "freeway" is defined in the California Streets and Highways Code Section 23.5. A "controlled access highway" is also referred to for the purpose of processing expressway route adoptions, denominating freeways as controlled access highways at sensitive locations, and processing California Transportation Commission (CTC) approval of new public road connections to expressways. Section 23.5 also indicates that in all other respects, the "controlled access highway" shall be subject to all provisions of the *California Streets and Highways Code* pertaining to freeways. See Chapter 23 – Route Adoptions, for specific discussions about "controlled access highways".

The term "expressway" is used in the *Highway Design Manual (HDM)* for highway design purposes and is defined in *California Streets and Highways Code* Section 257 for use in the California Freeway and Expressway System. On expressways, the term "controlled access highway" is substituted for "freeway" in agreements with local agencies.

Definitions

Access control – the full or partial restriction of access to owners or occupants of abutting lands to or from a highway.

Adopted route – a route authorized by law that the CTC has selected, adopted, and determined to be the location of the State highway.

Controlled access highway – an arterial highway for through traffic with full access control that may or may not be divided.

Delegated authority – the control or authority of a duty given to another person to make decisions on the originator's behalf.

Denomination – changing the designation of a route from freeway to controlled access highway. Denomination is recommended when construction of a full freeway is not anticipated in the 20-year design period for a route initially adopted as a freeway.

Design feature – a characteristic or attribute of the proposed project for the highway facility.

Expressway – an arterial highway for through traffic that may have partial access control that may or may not be divided or have grade separations at intersections.

Freeway – a divided arterial highway for through traffic with full access control and with grade separations at intersections. See *California Streets and Highways Code*, Sections 250 through 257, for a current listing of the California Freeway and Expressway System.

Geometric map – a type of freeway agreement exhibit map that displays all geometric features of the connections to the freeway.

Local agency – a public entity that could be a city or county.

Original freeway agreement – the initial freeway agreement that covers a freeway on a new alignment or the conversion of a conventional highway to a freeway.

Public hearing – a session for the public or the community to be informed and be able to voice their opinion on government proposals.

Relinquishment – the conveyance of all rights, title, interests, liability, and maintenance responsibilities of a State highway, or portion thereof, to another government entity.

Resolution of change – a city or county resolution (an official decision document) recommending minor changes to an already approved freeway agreement.

Special clause – a clause used for a particular case that is not in the freeway agreement template.

Superseding freeway agreement – replaces an original freeway agreement for the subject section of the facility. It is required when a project proposes major changes to the existing facility.

Symbol map – the preferred type of freeway agreement exhibit map that uses symbols depicting interchanges and grade separations along the facility.

ARTICLE 2 Laws

The following *California Streets and Highways Code* Sections provide key laws giving Caltrans the authority to enter into agreements with local agencies and define applicable terms to interpret these laws. In particular Sections 100.2, 100.21, 100.22 and 100.25 provide the statutory direction for execution of freeway or controlled access highway agreements when planned traffic circulation at or near a freeway or expressway will be modified, including modification to city streets or county roads.

California Statutes

California Streets and Highways Code Section 23.5

Section 23.5 states:

> "Freeway" means a highway in respect to which the owners of abutting lands have no right or easement of access to or from their abutting lands or in respect to which such owners have only limited or restricted right or easement of access. If, in the judgment of the commission or the director, the public interest would be advanced thereby, a freeway, as defined herein, may be denominated a "controlled access highway". In all other respects, the "controlled access highway" shall be subject to all provisions of this code pertaining to freeways.

California Streets and Highways Code Section 100.1

Section 100.1 states:

> The department is authorized to do any and all things necessary to lay out, acquire and construct any section or portion of a State highway as a freeway or to make any existing State highway a freeway.

California Streets and Highways Code Section 100.2

Section 100.2 states:

> The department is authorized to enter into an agreement with the city council or board of supervisors having jurisdiction over the street or highway and, as may be provided in such agreement, to close any city street or county highway at or near the point of its interception with any freeway or to make provision for carrying such city street or county highway over or under or to a connection with the freeway and may do any and all work on such city street or county highway as is necessary therefor. No city street or county highway shall be closed, either directly or indirectly, by the construction of a freeway except pursuant to such an agreement or while temporarily necessary during construction operations. No city street, county road, or other public highway of any kind shall be opened into or connected with any freeway unless and until the commission adopts a resolution consenting thereto and fixing the terms and conditions on which such connection shall be made and the commission may give or withhold its consent or fix such terms and conditions as, in its opinion, will best subserve the public interest.

California Streets and Highways Code Section 100.21

Section 100.21 states:

> (a) Whenever a street or highway closing agreement is required by Section 100.2, the department shall not acquire, except by gift, and except in hardship or protective cases as determined by the department or the commission, any real property for a freeway through a city until an agreement is first executed with the city council, or for a freeway through unincorporated territory in a county until an agreement is first executed with the board of supervisors. The department shall give notice to the city council or the board of supervisors, as the case may be, of any acquisition of real property prior to the execution of an agreement.
>
> (b) Notwithstanding subdivision (a), a city council, or a county board of supervisors may, by resolution, authorize the purchase of rights-of-way prior to approval of an agreement if the purchase is limited to the mainline corridor of the proposed freeway and the alignment of the freeway is not at issue.

California Streets and Highways Code Section 100.22

Section 100.22 states:

> The city council or board of supervisors shall, prior to entering into the agreement contemplated by Section 100.2, conduct a public hearing on the subject.

California Streets and Highways Code Section 100.25

Section 100.25 states:

> In addition to the other matters that may be covered by the agreements authorized under Section 100.2, provisions for improvements, revisions or extensions of city streets or county highways leading to or from a freeway, deemed by the department to be necessary in accommodating the freeway traffic in making proper connections between the existing system of city streets or county roads and the freeway, may be included in such agreements and the department may perform such work as a part of the freeway construction.

California Streets and Highways Code Section 100.3

Section 100.3 states:

> From and after the adoption of a resolution by the commission declaring any section of state highway to be a freeway, the highway described in such resolution shall have the status of a freeway for all purposes of Section 100.2.
>
> Such declaration shall not affect private property rights of access, and any such rights taken or damaged within the meaning of Section 19 of Article I of the California Constitution for such freeway shall be acquired in a manner provided by law.
>
> No state highway shall be converted into a freeway except with the consent of the owners of abutting lands or the purchase or condemnation of their right of access thereto.

ARTICLE 3 Policies

General

Freeway agreements are required by California Statutes and not by federal laws. The *California Streets and Highways Code*, Section 100.2 disallows any city street or county highway to be closed by the construction of a freeway or expressway without an executed freeway agreement between the State and the local jurisdiction authorizing such a closure.

The legislative intent for requiring freeway agreements is to obtain the local agency's support of local road closures and changes to the local circulation system, to protect property rights, and to assure adequate service to the community. Access control is necessary on freeways and expressways so that current and future traffic safety and operations are not compromised.

The rights of access of property owners must be acquired in a manner provided by law, which requires that other reasonable provisions be provided for access to local roads.

The proposed access control facility being covered by the freeway agreement should be examined for conformance to the access control policy in *HDM* Topic 104 and Index 205.1. The mandatory design standard for interchange spacing in *HDM* Topic 501 should also be examined for conformance by the facility.

Public Hearing

The local agency must have a public hearing prior to executing a freeway agreement with the State.

Freeway Agreements are Required for all Freeway Projects

As long as no streets are closed, a strict interpretation of *California Streets and Highways Code* Section 100.2 would make it theoretically possible to build a freeway without a freeway agreement. Caltrans, however, follows a practice that no freeway will be built without agreement of the local government except as otherwise provided for in California Statutes. Freeway agreements are therefore processed for all freeways and for all freeway projects that require a change to a previous freeway agreement. Except for temporary closings during construction, no city street or county highway may be closed by the freeway without such an agreement.

New Public Road Connections to Freeways or Expressways

A local road must not be connected to a freeway or expressway without consent of the CTC. A new interchange or a new public road connection to a freeway or expressway must be approved by the CTC before a freeway agreement can be executed with the local agency. See Chapter 27 – New Public Road Connections for a discussion of *California Streets and Highways Code* Section 100.2 pertaining to new public road connection procedures.

Conditions for Freeway Separation Structures or Interchanges

Freeway separation structures or new interchanges with unconstructed public roads are included on freeway agreement exhibit maps only when one or more of the following conditions are met:

- Construction of a usable length of the local road has been budgeted by the local agency.
- A written commitment has been secured from the board of supervisors or city council to the effect that a usable length of local road will be constructed or will be under construction at the time freeway construction is undertaken.
- The facility is required to provide access to adjacent property and analysis shows that the separation structure or interchange is more economical than other means of providing access during the interim period prior to the time the local road is to be constructed.

Federal Highway Administration Approval of Access Control Modification on the Interstate System

The Determination of Engineering and Operational Acceptability for new or modified Interstate access must be completed and sent to Headquarters Division of Design before the freeway agreement can be executed by Caltrans. The Federal Highway Administration (FHWA) must grant Final Approval of proposed access control modification on the Interstate system. See Chapter 27 – New Public Road Connections for more information.

Freeway Agreement Required Before Purchase of Right-of-Way or Start of Construction

California Streets and Highways Code Section 100.21 prohibits right-of-way acquisition prior to execution of a required freeway agreement—except for hardship and protection. A city council may, by resolution, authorize the purchase of rights-of-way prior to approval of a freeway agreement if the purchase is limited to the mainline corridor of the proposed freeway and the alignment of the freeway is not at issue. This prohibition of right-of-way acquisition applies to major changes unless incorporated in a freeway agreement. Caltrans policy requires all proposed freeway (controlled access highway) projects to be properly covered by an accurate freeway agreement prior to the start of a construction project.

Avoid Changes to Freeway Agreement Template

The purpose of a freeway agreement, as stated in the California Statutes, is to provide an agreement as to which local streets and roads will be closed, carried over or under the freeway, or to a connection therewith. The freeway agreement is not intended to be used as a vehicle to consummate agreement on other matters.

Special clauses should be held to an absolute minimum, as the presently approved standard clauses serve the intended purpose of freeway agreements. If special clauses are recommended by the local agency, the recommendation is to be supported by an explanation of why the special clause is required. See the heading “Special Clauses” in Article 6 for more information. The freeway agreement is not the appropriate vehicle to address concerns beyond the core purpose of the freeway agreement.

Freeway Agreement Not Used for Financial Participation

The freeway agreement does not include details of financial participation. Funding and financial obligations are covered in cooperative agreements pursuant to the *California Streets and Highways Code* Section 114 and Section 130. Therefore, in freeway agreements, the obligations are described in general terms such as "will always be dealt with in separate cooperative agreements between the parties, and any amendments thereto or encroachment permits."

The freeway project may involve work that is to be financed by the local agency. If requested by the local agency, the financial obligation may be shown on the exhibit map by adding a note. This may be appropriate for new connections, new crossings or pedestrian separations.

One Freeway Agreement for Each Local Agency per Route

In cases where a project is along a freeway corridor going through a number of cities and a freeway agreement is needed, agreements will have to be executed with each local agency affected by the project. If an interchange project is at a city/county or city A/city B limit line, two freeway agreements must be executed. Additionally, a freeway agreement must be executed with each local agency if the project is affecting traffic circulation in both jurisdictions (such as when the boundary limit line goes right through an interchange). It is preferred to have one freeway agreement per local agency per route. For more information, see Appendix CC – Preparation Guidelines for Freeway Agreement.

Certified Copy of Resolution with Authorizing Signature

A freeway agreement executed by a local agency must be accompanied by a certified copy of a resolution, minute order, or other decree adopted by the governing body that approves the freeway agreement and delegates authority for execution of the freeway agreement by agency officials. The freeway agreement must be executed by the party authorized to do so.

ARTICLE 4 General

Maintenance Agreements

Freeway agreements are used as the basis for establishment of maintenance agreements with local agencies, but are not used as maintenance agreements. Detailed information about maintenance agreements can be found in the *Maintenance Agreements Manual*.

Relinquishment of Local Roads

Highways or local roads under Caltrans jurisdiction that do not serve regional or statewide transportation needs should be relinquished to the appropriate local agency. Freeway agreements provide for the relinquishment of local roads constructed as part of the freeway project and are often the basis for the relinquishment action by the CTC. District staff in design or project management will work with district right-of-way engineering to initiate the relinquishment process. Requests for relinquishment CTC action must be forwarded to Chief, Office of Land Surveys, Headquarters Division of Right of Way and Land Surveys. Additional information about relinquishments is located in Chapter 25 – Relinquishments and Chapter 6 of the *Right of Way Manual*.

Keep Freeway Agreements Current

Because of its wide use, the freeway agreement is an extremely important document and care must be exercised in its preparation to ensure accuracy. During the design and construction phases of a project, sometimes it is necessary to make revisions that are not in conformance with the current freeway agreement. If minor changes to freeway agreements are needed, the resolution of change procedure can be used; see Article 8 “Resolutions of Change” for more information.

California Environmental Quality Act and National Environmental Policy Act Coordination

It is normal practice to have the FHWA environmental and design approvals prior to submitting a freeway agreement to a local agency for execution, however, it is permissible to advance the submittal to coincide with completion of the California Environmental Quality Act (CEQA) environmental document in those cases where the local agency procedural and review process is lengthy. Caltrans withholds execution until the FHWA concurs with the environmental document and design.

The "Freeway Agreement Ready for Execution" transmittal letter to the local agency should note this condition.

A project is approved by Caltrans when the project report (PR) and the final environmental document are approved and the notice of determination (NOD) is filed with the State Clearinghouse in the Governor's Office of Planning and Research. On projects categorically exempt under the provisions of CEQA, Caltrans' approval of the PR signifies approval of the project. The FHWA gives location and design feature approval when a finding of no significant impact (FONSI) is issued or when the record of decision (ROD) is published after approval of the final environmental impact statement (FEIS).

Declaration as Controlled Access Highway

If a controlled access highway agreement is desired on a route that was initially adopted as a freeway, the district may submit a draft agreement with a request to the Headquarters Division of Design Division Chief, Attention: Denomination to a Controlled Access Highway designation (denomination of the freeway as a "controlled access highway"). The Headquarters Division of Design Division Chief has the delegated authority to denominate the controlled access highway. The transmittal memo should justify and detail the reasons for the request. See Chapter 23 – Route Adoptions for more information.

Conformance to Adopted Route

All deviations from the adopted route in a draft freeway agreement submittal must be cleared by Headquarters Division of Design. To avoid any possible delay, the district must submit adequate justification to the Headquarters Project Delivery Coordinator for any alignment shift due to engineering reasons if re-adoption is not required. The Headquarters Project Delivery Coordinator has the delegated authority to concur with any alignment shift; however, a shift from the adopted alignment is only allowed for engineering reasons, not for political or other reasons. See Chapter 23 – Route Adoptions for more information.

Avoid Other Commitments in Freeway Agreements

Care should always be exercised to make no statements or commitments that Caltrans cannot deliver. An example of this is a local agency attempting to specify the year that certain improvements will take place. A freeway agreement to do this would commit a future CTC to a specific expenditure; the CTC is unable to act on this type of prior commitment, as each project must stand a test of priorities at the appropriate time.

Another common example is that the local agency may attempt to specify that certain project details be submitted to the local agency for approval. Caltrans' authority to approve plans should never be compromised, although Caltrans will work with the agency to devise mutually acceptable plans.

ARTICLE 5 Essential Procedures

Processing Procedures and Sequence of Events for the Freeway Agreement Execution Schedule

Original freeway agreements are required following project approval for a new freeway location or conversion of an existing conventional highway to freeway. Superseding freeway agreements are required for changes that alter the intent of the original freeway agreements. To document minor changes to the existing freeway agreements, see Article 8 "Resolutions of Change."

Once a determination has been made that a new or superseding freeway agreement is required, a defined review and approval process is followed.

The first and most difficult step to prepare a freeway agreement is determining the limits of the agreement. The limits of the freeway agreement do not need to be the same as the project limits, they may be extended to cover larger areas. For superseding freeway agreements, the limits do not need to be covered entirely by the environmental document as long as revisions are not made to the traffic circulation shown in the freeway agreement to be superseded. For guidelines on how to determine the limits of freeway agreement, see Appendix CC – Preparation Guidelines for Freeway Agreement.

The numbered sequence of events for the review and approval process is shown on the flow-diagram in Figure 24-1 and the corresponding numbered event descriptions are listed in the following paragraphs. In addition, refer to Chapter 11 – Public Hearing, and to Chapter 27 – New Public Road Connections, for requirements concerning new connections to the freeway.

1. Prepare Draft Freeway Agreement - For details on preparation of freeway agreements and exhibit maps see Article 6, Article 7, Appendix CC – Preparation Guidelines for Freeway Agreement, and the *Plans Preparation Manual*. Initial contact is made with the local agency at this point to get input on the draft freeway agreement exhibit map.

2. Transmit Draft Freeway Agreement to Headquarters Division of Design - The draft freeway agreement is transmitted to Headquarters Division of Design, Attention: Freeway Agreement, for review and approval (electronic copies preferred). The transmittal memo should state the purpose of the freeway agreement; some examples are:

   "It depicts a new plan of development."

   or

   "It revises a portion of the executed freeway agreement, and the changes are _____."

   or

   "It is a cleanup freeway agreement after construction and incorporates the following changes _____."

   Unusual items must be identified and fully justified, such as minor engineering deviations from the adopted route, work outside of normal limits on local roads, or exceptions to policy, etcetera.

   Submit the draft freeway agreement with the electronic copies of the draft project report (DPR) or PR if ready.

3. Technical and Legal Review by Headquarters Division of Design - Upon receipt in Headquarters Division of Design, the draft freeway agreement is reviewed for conformance to the adopted route, verified for correct reference to existing freeway agreements and conformance to exhibit map drafting standards. Items requiring revisions are returned to the district prior to further processing. If draft freeway agreement text is different from the standard freeway agreement template (see Appendix CC – Preparation Guidelines for Freeway Agreement), the draft is sent to the Headquarters Division of Legal for review and legal ruling.

4. Review of Design Features by Headquarters Division of Design - A review is conducted by the Headquarters Project Delivery Coordinator. This review of the entire plan of transportation development assures plan conformance to statewide practices, previous approvals, acceptable geometrics, and applicable provisions of the project development process.

   At this step, items requiring revision are returned to the district prior to further processing.

5. Transmit Copy of FHWA Approval Letter of New or Modified Access on Interstate Projects to Headquarters Division of Design - For projects with new or modified Interstate access, the district will send copies of the request letter to FHWA, the FHWA Determination of Engineering and Operational Acceptability approval letter, and correspondence to Headquarters Division of Design, Attention: FHWA Approval. See Chapter 9 – Project Initiation.

6. Transmit Freeway Agreement Approval to District - Once the Project Approval and Environmental Document (PA&ED) phase has been completed and all the required revisions to the freeway agreement have been made, Headquarters Division of Design will send an email approving the freeway agreement for execution by the local agency. Since formal submittal of the freeway agreement to the local agency generally commits the State to a specific plan of development, the submittal must not be made prior to receiving approval from Headquarters Division of Design. On occasions, the draft freeway agreement could be approved, subject to the condition that some minor items be corrected prior to submitting it to the local agency for execution.

7. Prepare Final Freeway Agreement - After the approval for local agency execution email has been received, the district prepares the final freeway agreement in duplicate, incorporating the changes (if any) requested by the Headquarters Division of Design approval.

8. Transmit Freeway Agreement to Local Agency - The local agency always executes the freeway agreement before Caltrans. A transmittal letter should accompany the freeway agreement that is sent to the local agency for execution. The letter should alert the local agency to the public hearing provisions in Section 100.22 of the *California Streets and Highways Code* for all original freeway agreements. It is not necessary to notify the local agency of this provision with superseding freeway agreements; nevertheless, they should be encouraged to include a statement in their resolution authorizing an official to sign the freeway agreement and confirm that the provisions of Section 100.22 have been met. Since the exposure to an action to enforce the law lies with the local agency, it is stressed that each local agency makes its own determination of what adequately meets the requirements of Section 100.22.

   If the freeway agreement covers an area where CTC approval of a new connection will be necessary, the transmittal letter should inform the local agency that the State's execution of the freeway agreement must follow CTC approval of the new connection.

9. Execution of Freeway Agreement by Local Agency - The local agency executes the freeway agreement in duplicate and returns these along with copies of the minute order or resolution authorizing its officer to sign the freeway agreement. If the local agency executes the freeway agreement with no change from the Division of Design approval, the official date of execution is the day the city council or county board of supervisors acts on the resolution or the minute order.

   State Not Obligated to Agree - The State is not obligated to execute a freeway agreement if the local agency has revised the conditions under which the agreement was presented to the agency.

10. Transmit Executed Freeway Agreement to Headquarters Division of Design - After execution in duplicate by the local agency, the complete freeway agreement (plus one additional print of the exhibit map) and the authorizing documents must be sent by memorandum to Headquarters Division of Design, Attention: Freeway Agreement.

    The transmittal memo must (1) specifically state that the freeway agreement conforms to the approved draft or (2) it must detail any changes made and the reasons therefore. If changes were requested in the draft approval, the transmittal memo must state that these changes were made or explain why they were not. These statements eliminate the need for further comprehensive review by Headquarters Division of Design.

11. Final Check by Headquarters Division of Design - Assuming that the statements required by step 10 have been made, a general review is made by Headquarters Division of Design.

12. Approval of New Connection by CTC - If there is a new connection on the freeway agreement, Headquarters Division of Design sends the new public road connection request to the CTC for approval. The freeway agreement is executed by the State after CTC approval. Refer to Chapter 27 – New Public Road Connections.

13. Execution of Freeway Agreement by Headquarters - The freeway agreement in duplicate is forwarded to the Headquarters Division of Legal for signature, which is the acceptance as to legal form. Then the freeway agreement is signed by the Headquarters Division of Design Division Chief as the Chief Design Engineer. This constitutes execution by the State.

14. Transmit Executed Freeway Agreement to District - Headquarters Division of Design sends one executed document to the district. The other executed document is sent to the Office of Business Services, Records and Forms Management to request an Assigned Document Number and for electronic filing as the official State freeway agreement. The additional print of the exhibit map is retained in Headquarters Division of Design.

15. District Transmits Executed Freeway Agreement to Local Agency - When received in the district, a copy of the fully executed document should be made for the project file and one copy for the district freeway agreements file. The original should be sent to the local agency.

16. Proceed with Project Development - Proceed with design, right-of-way acquisition, etc., as appropriate. The district is responsible for ensuring that the freeway agreement conforms to “as-built” construction plans. In the case of a cleanup freeway agreement after construction, there is no further action.

Figure 24-1 Sequence of Events for Freeway Agreements and Controlled Access Highway Agreements

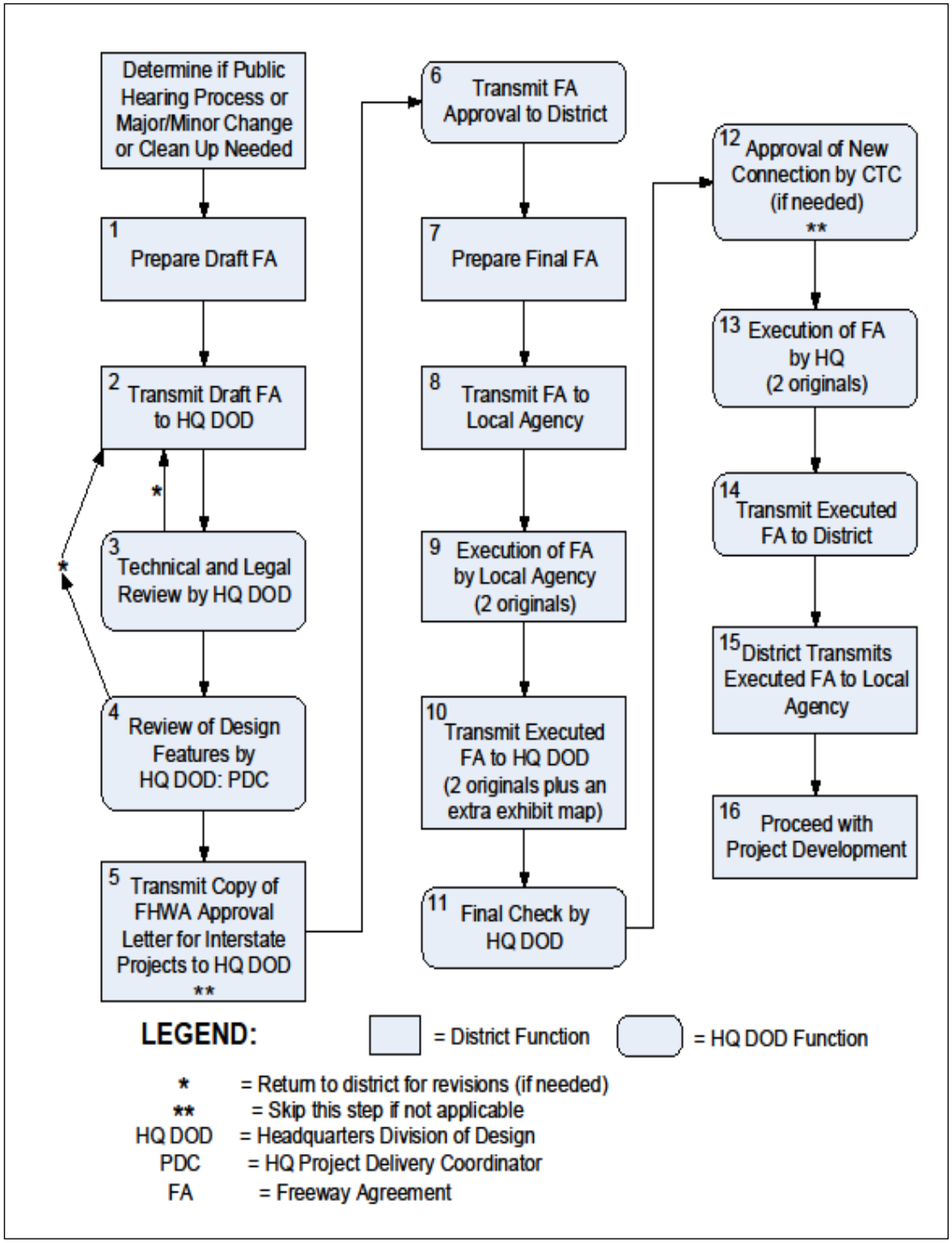

ARTICLE 6 Freeway Agreement Format

Types of Freeway Agreements

A freeway agreement is comprised of two parts, the text derived from the appropriate template (prepared by Headquarters Division of Legal) and an exhibit map. There are two types of freeway agreements, the original freeway agreement and the superseding freeway agreement. There are two templates for each type of freeway agreement based on the funding: one for projects funded/sponsored by Caltrans and one for projects funded or partially funded/sponsored by a local agency.

Original Freeway Agreement

An original freeway agreement is required for the initial development of a freeway on a new alignment or the conversion of a conventional highway to a freeway.

Superseding Freeway Agreement

A superseding freeway agreement is required when there is a need to change the text of the current executed agreement, to change the exhibit map, or to change the agreement limits. It can supersede the executed freeway agreement in part, or in its entirety.

When superseding a freeway agreement in an area that has been annexed or incorporated into a city, the superseding freeway agreement format is used. It is only necessary to make the appropriate references to the executed freeway agreement with the county, since the obligations of the county are automatically assumed by the city.

Follow the Templates

As previously stated, the purpose of a freeway agreement is to provide an agreement as to which local streets and roads will be closed, carried over or under the freeway, or to a connection therewith. The freeway agreement is not intended to be used as a vehicle to consummate agreement on other matters. The templates have been prepared by Headquarters Division of Legal to cover the essential items needed in a freeway agreement. If the draft freeway agreement text is different from the standard freeway agreement templates, the draft is sent to the Headquarters Division of Legal for review and legal ruling. See Appendix CC – Preparation Guidelines for Freeway Agreement, for sample template formats.

Special Clauses

Each district's particular circumstances may require the use of special clauses. These "special" clauses may be acceptable; however, their use is discouraged since they are not required for a freeway agreement. See Appendix CC – Preparation Guidelines for Freeway Agreement, under "Other Sample Freeway Agreement Clauses (Not Mandatory)" for other clauses that may be included.

ARTICLE 7 Freeway Agreement Exhibit Maps

Content of Exhibit Map

Every freeway agreement includes an exhibit map that displays the ultimate freeway plan, including all locations where work is proposed on local streets. The mapping should extend far enough on both sides of the freeway to show the traffic circulation on the local road system within the freeway corridor. Within this area all publicly used roads and alleys must be shown; conversely, private roads are not shown. On rare occasions there may be a need to show a private road, but the road must be specifically identified as private on the exhibit map.

For the purpose of freeway agreements, a public road or alley is defined as one which is traversable and has a public right-of-way of record. This includes prescriptive rights-of-way. This sometimes means that in a rural area a dirt trail may have public road status. A field review of roads and alleys may be required as part of the exhibit map preparation. A detailed right-of-way review must also be made to determine which roads and alleys have a public right-of-way of record. However, a "paper" county road or city street which exists only on paper as part of an approved subdivision map or as part of a master plan is, for the purposes of *California Streets and Highways Code* Section 100.2, considered to be nonexistent. These streets or roads are not shown on the freeway agreement, nor are they considered for CTC approval of a new public road connection. See Chapter 27 – New Public Road Connections, for more information on public versus private road determination.

Types of Exhibit Maps

The "symbol" and the "geometric" are the two types of exhibit maps in general use. The symbol map depicts interchanges and grade separations with symbols, except railroad separations and pedestrian separations are only shown geometrically. It does not show on-ramps or off-ramps at interchanges. The geometric map displays all

geometric features of these items. All other features (such as hook ramps, pedestrian overcrossings, and bike trails) are shown on both types of maps. Combining symbol and geometric features in the same exhibit map is not allowed, except when there is a freeway-to-freeway interchange (interchange with no local roads) because they must be depicted with geometric features.

Exhibit Map Recommended

The symbol map is recommended for use whenever possible. The symbol map is typically adequate to fulfill the core purpose of the freeway agreement, which is to document the agreement as to how the local system will connect to the freeway system. The use of the symbol map allows geometric changes to be made without revising the freeway agreement.

A geometric map should only be used to depict complex interactions between the local system and freeway system that cannot be adequately displayed using a symbol map. Although the geometric map is sometimes preferred by local agencies that feel they must approve actual designs, the freeway agreement is not the appropriate vehicle for such conversations. Because the executed exhibit map is a part of the freeway agreement and the facility layout changes as it is refined during the design process, there is always the possibility that a court could conclude that failure to construct in accordance with the exhibit map is a violation of the freeway agreement. Also, the use of a geometric map may require that the freeway agreement be updated each time the geometrics of the connections change.

Exhibit Map Guidelines

Exhibit maps should follow the examples in Figure 24-2 and Figure 24-3. See Appendix CC – Preparation Guidelines for Freeway Agreement and the *Plans Preparation Manual* for sample exhibit maps and detailed direction on preparing both symbolic and geometric type of freeway agreement exhibit maps.

Figure 24-2 Freeway Agreement Exhibit Map - Symbol

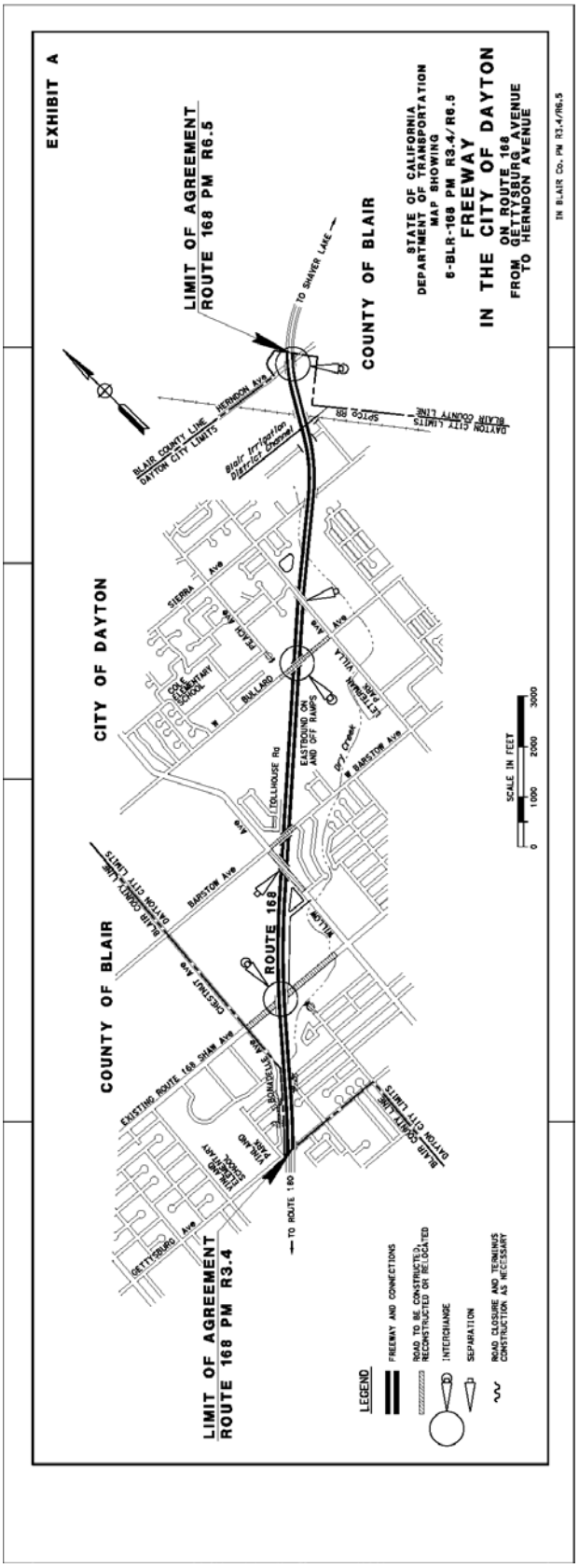

Figure 24-3 Freeway Agreement Exhibit Map - Geometric

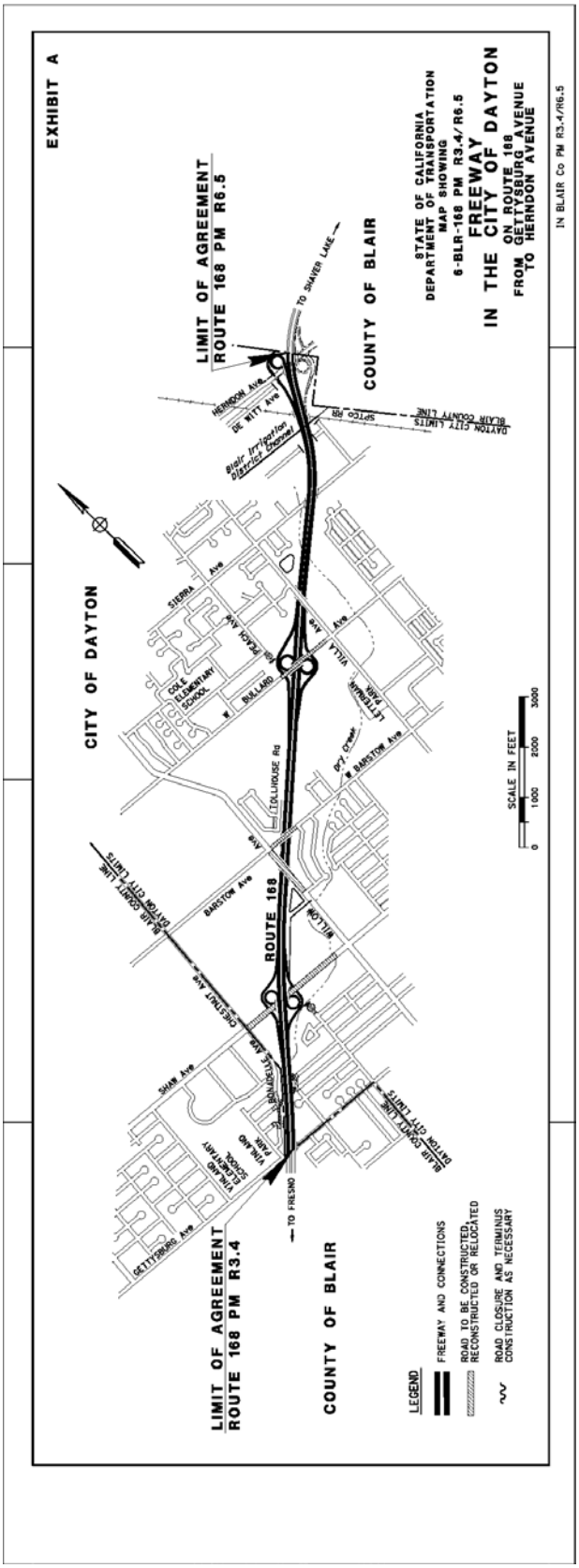

Exhibit Map Notes and Symbols

The mainline of the freeway and interchange connections for those portions of work within the freeway agreement limits should be darkened, that is filled-in within the lines. Roadways outside the freeway agreement limits should show as open lines. See Figure 24-4.

Figure 24-4 Freeway Agreement Notes and Symbols Example 1

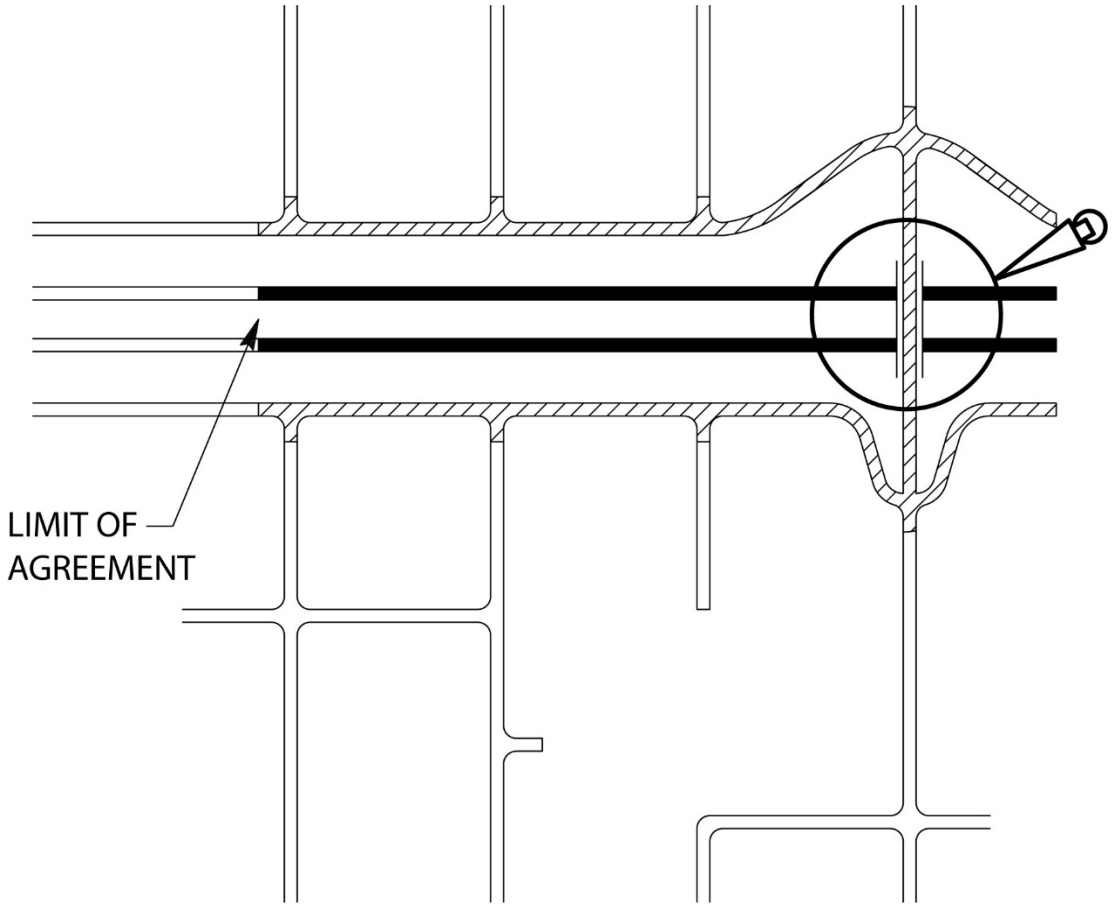

The freeway agreement does not commit the State to any construction timetable; it is preferable that exhibit maps be prepared on the basis of the ultimate improvement plan whenever possible. However, there will be occasions when, for mutual understanding, or at the insistence of the local agency, it may be necessary to indicate some form of initial construction on the exhibit map. One example might be when only the separation portion of an interchange will be constructed with the freeway. In this case a note should be placed on the exhibit map stating "Ramps To Be Constructed When Justified and Programmed." On a symbol map, a dashed interchange symbol and the note should be used only if the interchange was studied and approved in the environmental document. On a geometric map, the ramps can be shown by dashed lines with the note. See Figure 24-5. Another example might be where the initial construction will be an expressway. In this case, the initial expressway condition at the intersections can be indicated by note or with graphic insets on the exhibit map.

Figure 24-5 Freeway Agreement Notes and Symbols Example 2

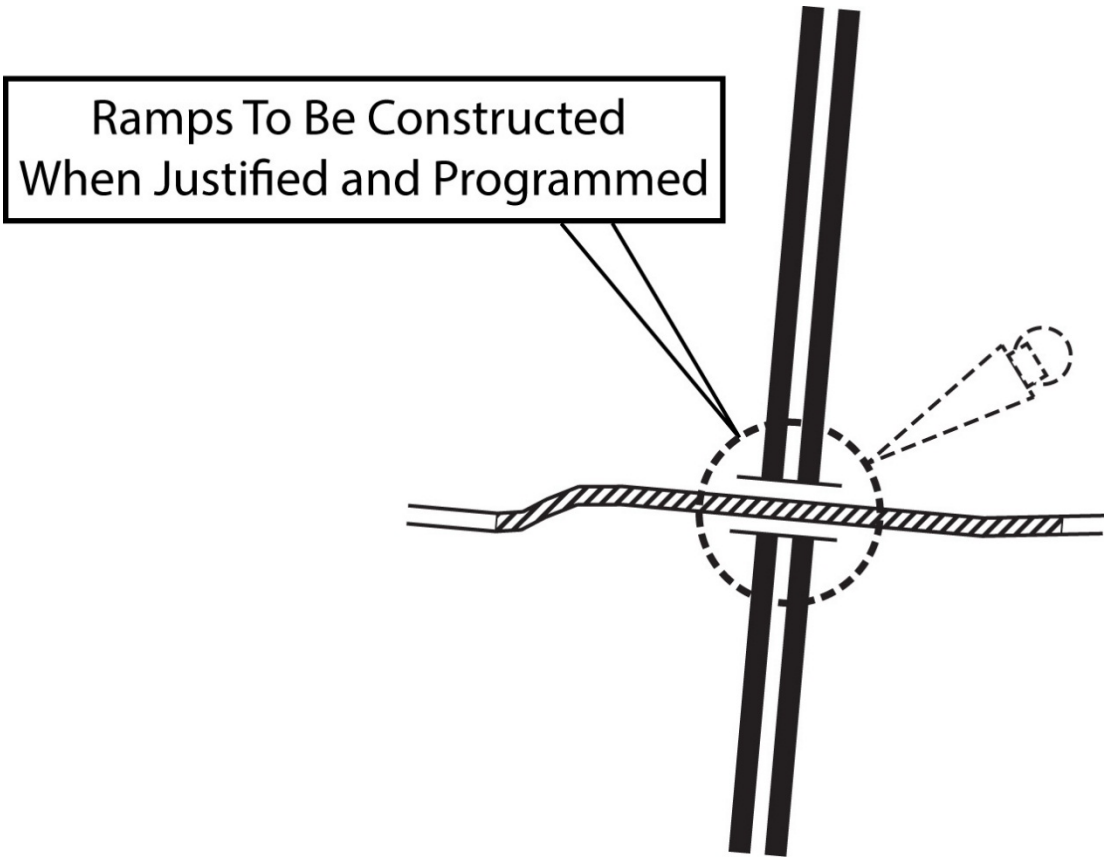

ARTICLE 8 Resolutions of Change

Purpose

A freeway agreement may be changed at any time by mutual consent. A resolution of change is an intermediate step that may be taken prior to superseding the executed freeway agreement. The resolution of change procedure is used to document minor changes to the State highway or to the local roads within the limits of an existing freeway agreement. Construction of a new pedestrian overcrossing or a realignment of a frontage road is an example of a minor change.

Resolution Details

Resolutions are obtained from the local agency whereby they agree, or request, that revisions be incorporated into a superseding freeway agreement at some future date. The resolutions generally reference the current executed freeway agreement, state what changes are proposed, and should state why. An exhibit map is attached for clarification. The exhibit map may be a portion of the executed freeway agreement exhibit map, modified to show the changes. The resolution and the exhibit map should be 8.5 x 11-inch in size.

Major Changes by Superseding Freeway Agreement

Any change may be covered by a resolution, but the timing of the superseding freeway agreement is critical for resolutions covering major changes. Major changes must be followed up and covered by a superseding freeway agreement before beginning design, right-of-way acquisition, or construction. Major changes usually require the project development/environmental process.

Major Change Definition

A major change is generally defined as follows: Added local road closures, reconnecting previously closed local roads, new interchanges, new grade separations, significant lengths of new frontage roads, or making any major revisions thereto. These items are included because they are required by law to be covered by a freeway agreement or have a significant effect on the local agency and residents.

Minor Changes - Deferred Freeway Agreement

Changes such as minor variations of design on frontage roads, interchanges, and grade separations, etc., must also be covered by a superseding freeway agreement—but this may be deferred until after construction. The resolutions are reviewed in the district for geometrics and scope, and cleared with the FHWA as appropriate. Minor changes are usually categorically exempt under CEQA and categorically excluded under the National Environmental Policy Act (NEPA).

Resolutions for Minor Changes

Local agencies' resolutions for minor changes may be accumulated and included in one freeway agreement, but they must be transmitted individually to Headquarters Division of Design, Attention: Resolution of Change, as soon as they are executed by the local agency. Two copies are required and the transmittal memorandum should detail the changes and provide whatever justification is necessary. Headquarters Division of Design files the resolutions with the current executed freeway agreement.

CHAPTER 25 – Relinquishments

Table of Contents

CHAPTER 25 – Relinquishments 25-3
ARTICLE 1 Introduction and Definitions 25-3
Introduction 25-3
Definitions 25-4
ARTICLE 2 Laws 25-6
California Statutes 25-6
ARTICLE 3 Policies 25-8
General 25-8
Schedule Requirements for Requests for California Transportation Commission Action 25-9
Use of Project Initiation Documents for Relinquishments 25-10
Deletion of a Route by Legislative Enactment 25-10
Establishing a Cost to Relinquish for a Legislative Enactment Relinquishment 25-10
Programming 25-11
ARTICLE 4 Essential Procedures 25-11
Freeway Agreements or Controlled Access Highway Agreements for Relinquishment of Local Roads and Superseded Highways 25-12
Legislative Enactment Relinquishment Procedures 25-12
Procedures for Other Types of Relinquishments 25-17
Procedures that Apply to All Relinquishment Types 25-22
ARTICLE 5 Conflict Resolution Process 25-24
Conflict Resolution 25-24
Initial District/Local Agency Agreement 25-25
District Director Review 25-25
Relinquishment Resolution Committee Review 25-26
Relinquishment Information Sheet 25-27
Chief Engineer Review 25-28
Submittal to the California Transportation Commission for Public Hearing 25-28
Public Hearing Provided at California Transportation Commission Meeting 25-29

Table of Figures

Figure 25-1 Legislative Enactment Relinquishment Process 25-15
Figure 25-2 Conflict Resolution Process 25-31

CHAPTER 25 – Relinquishments

ARTICLE 1 Introduction and Definitions

Introduction

The removal of a State highway, either in whole or in part from the State Highway System (SHS), requires a relinquishment approved by the California Transportation Commission (CTC). There are four types of relinquishments:

- Legislative Enactment
- Superseded by Relocation
- Collateral Facilities (including outer highways)
- Nonmotorized Transportation Facilities

This chapter discusses the procedures for each type of relinquishment and when costs are to be considered.

Caltrans recognizes that there are several State highways that can be characterized as a conventional city street or a county road. These highways do not serve regional or statewide transportation needs and, therefore, represent facilities for potential relinquishment. The districts should work with local agencies to identify and transfer these facilities as appropriate.

There are several benefits to relinquishing facilities that are no longer required to serve regional and statewide needs:

- An increase in local agencies' responsiveness to community interest in the administration, planning, construction, and operation of facilities, resulting in a cost savings to taxpayers by eliminating the need for State encroachment permits
- A reduction of on-going maintenance costs for the State
- A reduction in tort liability for the State
- A decrease in State incident response efforts
- Decreased competition for capital funds for regional and statewide improvements

Definitions

Best interest of the State – the best possible value for the State. The benefits of the relinquishment are provided at the lowest cost while minimizing risk.

Betterment – a physical improvement to a facility (roadbed, roadway, or roadside element) either geometrically or structurally, that would be considered above and beyond a state of good repair.

Cost to relinquish – a level of work or financial contribution to facilitate the relinquishment.

Collateral facility – a commonly used term for streets or roads and appurtenances constructed in connection with a State highway project that are not needed for continuity or the proper functioning of the State Highway System. Examples of these facilities include frontage roads, relocated or reconstructed roads, service roads, and cul-de-sacs. Collateral facilities also include outer highways such as park-and-ride lots and safety roadside rest areas that are needed to support travelers and alleviate highway congestion. Facilities that are appurtenant may include landscaping, slope, and drainage or basin areas.

CTC relinquishment resolution – a written, formal form of a motion expressing a decision of the CTC approving or not approving a proposed relinquishment. Relinquishment resolutions are required by the *California Streets and Highways Code*, Section 73 and are used as evidentiary documents to be transmitted to another governmental agency.

Nonmotorized transportation facility – as defined in the *California Streets and Highways Code*, Section 887, a facility designed primarily for the use of pedestrians, bicyclists, or equestrians.

Outer highway – a facility that is a part of the highway system but not a part of the traversable highway. Park-and-ride lots and safety roadside rest areas fit within the description of an outer highway.

Park-and-ride lot – the term used to describe a parking facility located along or near the State Highway System that provides a location for individuals to park their vehicles to join carpools and to access bus and/or rail services.

Relinquishment – the conveyance of all rights, title, interests, liability, and maintenance responsibilities of a State highway, or portion thereof, to another government entity.

Relinquishment agreement – a type of cooperative agreement. It documents the terms and conditions under which Caltrans relinquishes 1) any portion of a State highway or facility, including outer highways, to either a city or county; or 2) a park-and-ride lot to a county transportation commission, a joint powers authority, a transit district, or a regional transportation planning agency (RTPA).

Relinquishment assessment report (RAR) – a system analysis report prepared for legislative enactment relinquishments and for park-and-ride lot relinquishments. These reports are developed by district transportation planning and approved by the Headquarters Division of Transportation Planning.

Relinquishment by legislative enactment – the use of legislative action to remove a portion of a State highway from the State Highway System.

Relinquishment by relocation – the same as "relinquishment by superseding."

Relinquishment by superseding – the removal of a portion of a State highway that has been relocated, realigned, or built on an alignment that is different from the current alignment, making the old alignment redundant.

Relinquishment information sheet (RIS) – a document prepared by the district that informs the Relinquishment Resolution Committee and Chief Engineer of discussions and issues surrounding a disputed relinquishment.

Relinquishment Resolution Committee (RRC) – a committee consisting of the Headquarters Division Chiefs of Design, Transportation Planning, Transportation Programming, Maintenance, Traffic Operations, Environmental Analysis, Right of Way and Land Surveys, and Legal that reviews disputed relinquishments to provide advice to the district and the Chief Engineer. Optional members may include CTC staff, an impartial district member, and an impartial local agency member.

State of good repair – as defined in the *California Streets and Highways Code*, Section 73, a safe, drivable, well-maintained road. Capacity increasing improvements or betterments are not included when bringing a highway to a state of good repair.

System analysis – a high-level planning and operational analysis of State Highway System corridors to evaluate current and future conditions as well as multimodal elements of the transportation facility. The system analysis also determines travel demand adequacy and improvements needed to maintain mobility.

ARTICLE 2 Laws

The sections of the *California Streets and Highways Code* included here define the CTC's role and authority to relinquish a State highway. They define what types of facilities can be relinquished, to whom, and under what conditions. The attributes for the State Highway System are discussed in *California Streets and Highways Code*, Section 300.

California Statutes

California Streets and Highways Code, Section 73

Section 73 states:

> The commission shall relinquish to any county or city any portion of any state highway within the county or city that has been deleted from the state highway system by legislative enactment, and the relinquishment shall become effective upon the first day of the next calendar or fiscal year, whichever first occurs after the effective date of the legislative enactment. It may likewise relinquish any portion of any state highway that has been superseded by relocation. Whenever the department and the county or city concerned have entered into an agreement providing therefor, or the legislative body of the county or city has adopted a resolution consenting thereto, the commission may relinquish, to that county or city, any frontage or service road or outer highway, within the territorial limits of the county or city, which has a right-of-way of at least 40 feet in width and which has been constructed as a part of a state highway project, but does not constitute a part of the main traveled roadway thereof. The commission may also relinquish, to a county or city within whose territorial limits it is located, any nonmotorized transportation facility, as defined in Section 887, constructed as part of a state highway project if the county or city, as the case may be, has entered into an agreement providing therefor or its legislative body has adopted a resolution consenting thereto.

Relinquishment shall be by resolution. A certified copy of the resolution shall be filed with the board of supervisors or the city clerk, as the case may be. A certified copy of the resolution shall also be recorded in the office of the recorder of the county where the land is located and, upon its recordation, all right, title, and interest of the state in and to that portion of any state highway shall vest in the county or city, as the case may be, and that highway or portion thereof shall thereupon constitute a county road or city street, as the case may be.

The vesting of all right, title, and interest of the state in and to portions of any state highways heretofore relinquished by the commission, in the county or city to which it was relinquished, is hereby confirmed.

Prior to relinquishing any portion of a state highway to a county or a city, except where required by legislative enactment, the department shall give 90 days' notice in writing of intention to relinquish to the board of supervisors, or the city council, as the case may be. Where the resolution of relinquishment contains a recital as to the giving of the notice, adoption of the resolution of relinquishment shall be conclusive evidence that the notice has been given.

The commission shall not relinquish to any county or city any portion of any state highway that has been superseded by relocation until the department has placed the highway, as defined in Section 23, in a state of good repair. This requirement shall not obligate the department for widening, new construction, or major reconstruction, except as the commission may direct. A state of good repair requires maintenance, as defined in Section 27, including litter removal, weed control, and tree and shrub trimming to the time of relinquishment.

Within the 90-day period, the board of supervisors or the city council may protest in writing to the commission stating the reasons therefor, including, but not limited to, objections that the highway is not in a state of good repair, or is not needed for public use and should be vacated by the commission. In the event that the commission does not comply with the requests of the protesting body, it may proceed with the relinquishment only after a public hearing given to the protesting body on 10 days' written notice.

California Streets and Highways Code, Section 73.01

Section 73.01 states:

(a) The commission may relinquish to a county transportation commission created pursuant to Chapter 1 (commencing with Section 130000) of Division 12 of the Public Utilities Code, a joint powers authority formed for the purposes of providing transportation services, a transit district, or a regional transportation planning agency, a park-and-ride lot within their respective jurisdictions, on terms and conditions that the commission finds to be within

> the best interests of the state, if the department enters into an agreement with the county transportation commission, joint powers authority, the transit district, or regional transportation planning agency providing for that relinquishment.
>
> (b) The county transportation commission, joint powers authority, the transit district, or regional transportation planning agency requesting the relinquishment shall agree to maintain, at a minimum, the number of parking spaces provided by the department in the lot at the time of relinquishment. The relinquishment shall become effective on the date following the county recorder's recordation of the relinquishment resolution containing the commission's approval of the terms and conditions of the relinquishment.

California Streets and Highways Code, Section 73.5

Section 73.5 states:

> Whenever any area has been or may hereafter be constituted a National park or be added to any existing National park and jurisdiction thereover has been ceded by the Legislature to the United States, any lands within such area acquired for highway purposes may be conveyed by the department to the United States on such terms as the commission shall approve.

California Streets and Highways Code, Section 300

Section 300 states:

> The state highway system shall consist of the routes described in this article.
>
> It is the intent of the Legislature, in enacting this article, that the routes of the state highway system serve the state's heavily traveled rural and urban corridors, that they connect the communities and regions of the state, and that they serve the state's economy by connecting centers of commerce, industry, agriculture, mineral wealth, and recreation.

ARTICLE 3 Policies

General

Highways or local roads under Caltrans' jurisdiction that do not serve regional or statewide transportation needs should be relinquished to the appropriate local agency. Caltrans districts must work with local agencies to identify these facilities and develop strategies to facilitate their relinquishment. For legislative enactment type relinquishments, legislation must be established into law to allow these facilities to be

relinquished. Local agencies or districts must work with State legislators to initiate relinquishment legislation.

When relinquishing a State highway, there may be occasions when it is appropriate for Caltrans to perform work or to provide financial contributions to the local agency to ensure that the facility is well maintained and in operable condition. Additional work or financial contributions may be considered if they are in the best interest of the State.

The *California Streets and Highways Code*, Section 73 authorizes relinquishment of transportation facilities to cities and counties by the CTC. It identifies four types of relinquishments:

- Legislative Enactment
- Superseded by Relocation
- Collateral Facilities (including outer highways)
- Nonmotorized Transportation Facilities

Section 73 also mandates that the CTC relinquish to any city or county any portion of any State highway within their jurisdiction that has been deleted from the State Highway System by legislative enactment.

The *California Streets and Highways Code*, Section 73.01 authorizes relinquishments of park-and-ride lots to county transportation commissions, joint powers authorities, transit districts, or to regional transportation planning agencies. However, any proposed relinquishment of park-and-ride facilities procured with federal funds must be approved by the Federal Highway Administration (FHWA).

Schedule Requirements for Requests for California Transportation Commission Action

For all relinquishments except deletion of a route by legislative enactment, district design, planning, or the project manager will initiate the relinquishment process at least four months prior to the anticipated project construction completion. Requests for CTC relinquishment resolutions must be forwarded to the Chief of the Office of Land Surveys, Headquarters Division of Right of Way and Land Surveys. This will permit one month for processing and mailing of the 90-day written notice of intention to relinquish, as required by statute.

If the city or county protests the proposed relinquishment in writing, special efforts should be made to resolve any issues raised. For relinquishments of a State highway superseded by relocation, any major issues with the city or county should be resolved before the start of construction, while working on the cooperative agreements or during either the plan preparation stage or the joint field review of the existing highway. See the conflict resolution process described in detail in Article 5 "Conflict Resolution Process."

Use of Project Initiation Documents for Relinquishments

Caltrans typically uses a project scope summary report (PSSR) as the project initiation document (PID) and project approval document for relinquishments.

For legislative enactment relinquishments, a project initiation document is only required if there is a cost to relinquish.

For highway superseded by relocation relinquishments, a project initiation document and project approval document are only required if the project approval document for the parent project does not cover the cost to relinquish.

For information on application of the PSSR, see the heading "Approval of Project Scope Summary Report" in Chapter 9 – Project Initiation.

Deletion of a Route by Legislative Enactment

When any portion of a State highway is to be deleted from the State Highway System by legislative enactment, the relinquishment does not become effective until the first day of the next calendar year or fiscal year, whichever occurs first after the effective date of the legislative enactment and after the relinquishment has been approved by the CTC.

Establishing a Cost to Relinquish for a Legislative Enactment Relinquishment

A State highway segment shall be considered for legislative enactment relinquishment when the District Director, in consultation with Headquarters Division of Transportation Planning, determines that the segment does not serve regional or statewide transportation needs as determined by a system analysis documented in a relinquishment assessment report. Following the determination that the State highway segment could be relinquished, the associated cost to relinquish, if any, shall

be based on a benefit-cost analysis specific to the portion of the State highway segment in question. See the "Cost to Relinquish and Benefit-Cost Analysis" heading in Article 4 for more information. If a cost to relinquish has been negotiated, it must be discussed in the project initiation document, project approval document, and in a relinquishment agreement.

Programming

Costs for relinquishment are always programmed and shall be discussed in the PID for the relinquishment.

Caltrans is under no statutory obligation to bring a facility into a state of good repair when considering a potential relinquishment of a State highway to a local agency by legislative enactment. However, at times it may be in the best interest of the State to negotiate with the local agency a level of work or contribution to facilitate the relinquishment. If there is any associated cost to relinquish, the cost will need to be discussed in a PID for programming. This document will enable Caltrans' cost to relinquish to be amended into the State Highway Operation and Protection Program (SHOPP) and voted on by the CTC.

For projects that include the relinquishment of a highway superseded by relocation, the proposed relinquishment work or the costs to bring the superseded highway to a state of good repair shall be discussed in the PID. The programming of the relocation project shall include funds needed for any relinquishment work. If the PID and/or project approval document, for the parent project, does not adequately define the scope, cost, and schedule of the relinquishment work, then a supplemental PID or a new PID needs to be prepared.

ARTICLE 4 Essential Procedures

This article outlines the procedures specific to legislative enactment relinquishments, procedures specific to other types of relinquishments, and procedures that are common to all types of relinquishments.

Compliance with environmental law is required for all relinquishments; the guidance is contained in the *Standard Environmental Reference* (*SER*).

Freeway Agreements or Controlled Access Highway Agreements for Relinquishment of Local Roads and Superseded Highways

For all types of relinquishments except legislative enactment relinquishments, a freeway agreement or controlled access highway agreement usually identifies for relinquishment those local roads constructed as part of a freeway or expressway project. If these types of agreements are not involved or do not include the local roads to be relinquished, a relinquishment agreement or a resolution adopted by the local agency is required. The relinquishment agreement or resolution is the basis for relinquishment action by the CTC. When a local agency adopts a resolution that consents to accepting the facility, a separate freeway agreement or controlled access highway agreement is not required for purposes of the relinquishment. For more information on freeway agreements and controlled access highway agreements, see Chapter 24 – Freeway Agreements.

Legislative Enactment Relinquishment Procedures

This sub-article outlines the process for the relinquishment of a State highway where legislative enactment authorizes the CTC to relinquish an entire route or a portion of a route to a local agency. Figure 25-1 provides a flow chart that highlights the decision points for whether or not to move forward with the relinquishment from a system perspective and how to proceed with the different funding options when parties agree to the relinquishment terms. It may be necessary to conduct a joint field review during the legislative enactment relinquishment process. See the "Joint Field Review" heading for more information.

Appropriateness of Relinquishment

Caltrans must first determine whether the relinquishment makes sense from a transportation system perspective. The district should inform the Headquarters Division of Transportation Planning of any proposed legislation to relinquish a State highway to a local agency. The District Director, in consultation with the Headquarters Divisions of Transportation Planning and Traffic Operations during a system analysis, shall make a determination as to the appropriateness of the legislative enactment relinquishment. A relinquishment assessment report must be developed by district transportation planning and approved by the Headquarters Division of Transportation Planning. The decision of the appropriateness of the relinquishment must be documented in a letter to the local agency signed by the

District Director. This letter serves to initiate the staff workload to execute the relinquishment.

Headquarters Division of Transportation Planning must ensure that the Headquarters Division of Legislative Affairs is informed of any proposed legislation to relinquish a State highway or portion of a State highway.

Cost to Relinquish and Benefit-Cost Analysis

Caltrans is under no statutory obligation to put a facility into a state of good repair, construct improvements or betterments, or incur a financial obligation of any kind to relinquish a State highway to a local agency by legislative enactment. This should be the initial premise established by the district when considering or discussing the potential relinquishment. However, at times it may be in the best interest of the State to negotiate with the local agency a level of work or contribution to facilitate the relinquishment. This cost to relinquish is one factor of a benefit-cost analysis. The benefit-cost analysis compares the cost to keep a facility in the State Highway System with the cost of relinquishment and facilitates the decision process. It also provides the basis of the business decision to expend State Highway Account funds to relinquish a given portion of a State highway. The PID must include the benefit-cost analysis; this enables Caltrans' cost to relinquish to be amended into the SHOPP. The project approval document must include the benefit-cost analysis that enables Caltrans' to request relinquishment approval from the CTC.

Each relinquishment must be considered in context to establish a negotiation strategy. The relinquishment will provide control of the facility to the local agency and allow them to pursue improvements to their local system or other enhancements to their community without the constraints of Caltrans' requirements and encroachment permit process. This is an economic benefit to the local agency. Removing the road from the State Highway System is an economic benefit to Caltrans as well, since it reduces maintenance costs, capital improvement costs, and exposure to tort liability.

The benefit-cost analysis will compare the costs to maintain and operate the road with the cost to relinquish over a ten-year period utilizing an assumed interest rate based on the escalation rate used in the State Transportation Improvement Program (STIP) and SHOPP, and appropriate costs and benefits specific to the portion of the State highway segment in question. Caltrans negotiates the cost to relinquish with the local agency. Components of the cost to relinquish estimate are driven by the characteristics of the highway to be relinquished. For example, when assessing

maintenance costs, Caltrans will first establish a baseline pavement strategy. If a rehabilitation project has recently been completed, future maintenance costs should be low and are not likely to be included in the negotiation. If Caltrans has an approved PID for a rehabilitation project on a section of highway that will be relinquished, it may be appropriate to include the support costs for delivering the project as part of the cost to relinquish. Tort liability is not an item to be included in the negotiation, although it may be a factor in determining how much Caltrans is willing to negotiate to relinquish the highway.

Negotiation with Local Agency

The district is responsible for negotiating the cost to relinquish, if any, with the local agency. A relinquishment agreement will be required if a transfer of funds, effort, or materials is necessary for the relinquishment. The District Director is ultimately accountable to the CTC to ensure that the negotiated cost to relinquish is in fact in the best interest of the State and not a gift of State funds. The determination of whether the proposal is a good business decision will be mainly based on the prepared ten-year period cost benefit analysis. If negotiation is required with the local agency, see the "Procedures that Apply to All Relinquishment Types" sub-article for more information on negotiation and resolution procedures.

Programming and California Transportation Commission Approval of Relinquishment

If a cost to relinquish has been negotiated, an executed relinquishment agreement will be required prior to project programming. It is the district's responsibility to coordinate with the Headquarters Division of Transportation Programming and appropriate SHOPP program manager to ensure that SHOPP funds are available, if necessary, for the relinquishment. The Headquarters Division of Programming will determine the availability of the SHOPP funds for the proposed relinquishment. The district is also responsible for sending a Funds Request to the Headquarters Division of Transportation Programming and sending relinquishment maps to the Headquarters Division of Right of Way and Land Surveys. The CTC approval process will be coordinated through the Headquarters Division of Design, Office of Project Development Procedures.

Figure 25-1 Legislative Enactment Relinquishment Process

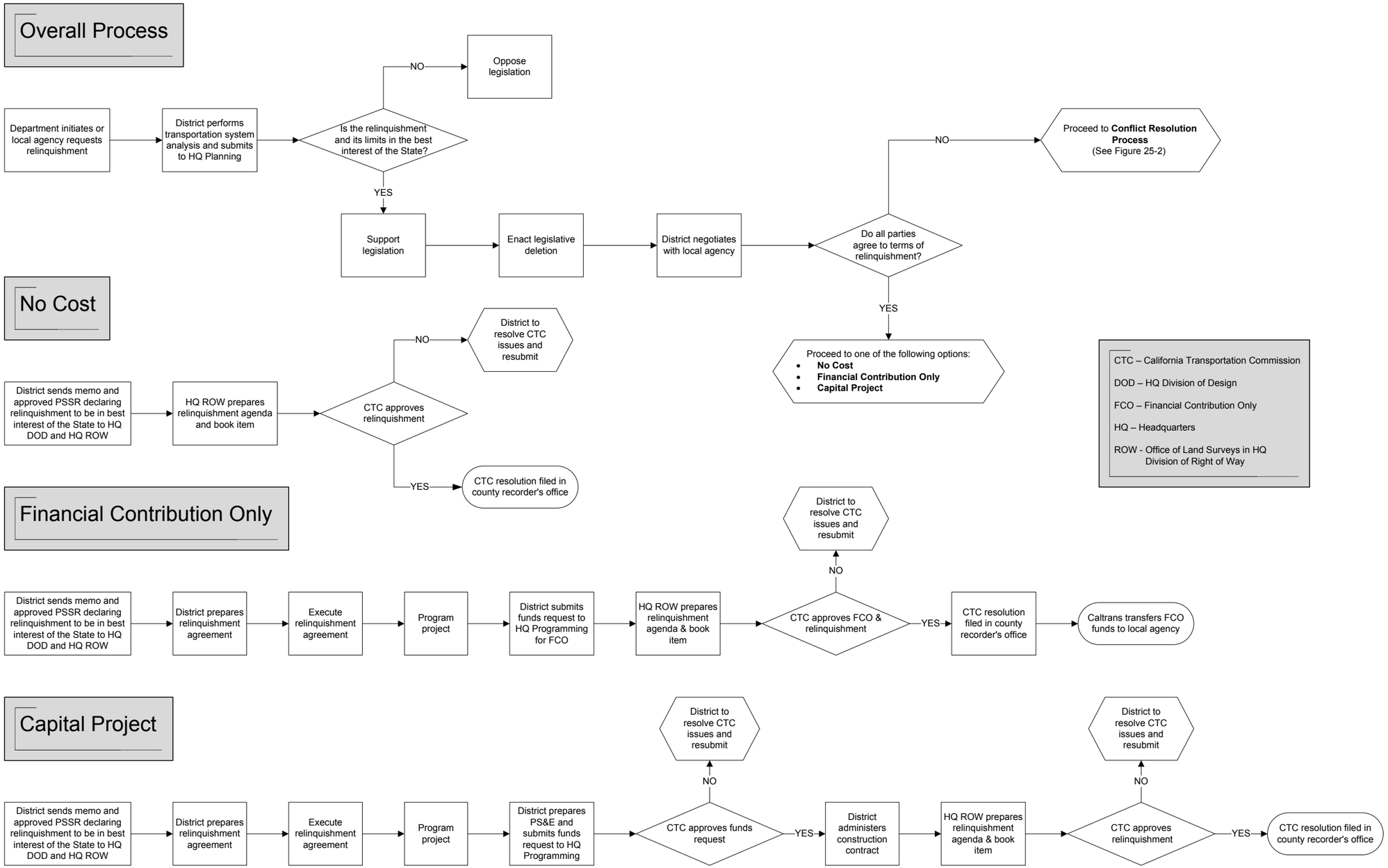

Procedures for Other Types of Relinquishments

This sub-article outlines the procedures for relinquishment of:

- a highway superseded by relocation.
- a collateral facility.
- a nonmotorized transportation facility.
- a park-and-ride lot to any of the entities authorized by *California Streets and Highways Code*, Section 73.01.

Relinquishment of a highway superseded by relocation occurs when any portion of a State highway has been realigned or built on an alignment that is different than the existing alignment, making the old alignment redundant. The old alignment is then to be relinquished to the appropriate local agency.

A collateral facility relinquishment occurs when streets and roads have been built or modified during the course of a State highway project, and are not needed for the State Highway System, and are to be relinquished to the appropriate local agency.

Park-and-ride lots can also be relinquished to cities and counties as collateral facilities. Park-and-ride lot relinquishments to county transportation commissions, joint powers authorities, transit districts, or regional transportation planning agencies have specific requirements discussed later in this article.

Nonmotorized transportation facility relinquishments occur when sidewalks or bikeways are to be relinquished to the local agencies, usually by their request.

Relinquishment Procedures of a Highway Superseded by Relocation

Projects superseding an existing highway with a new State highway should include specific measures for placing the existing highway in a state of good repair prior to relinquishment. Major widening of the superseded highway or other improvements (except safety work) that result in betterment of the facility should not be considered in the state of good repair calculation. However, the city or county may elect to pay for improvements when the improvement costs exceed what is required to place the existing facility in a state of good repair.

The State is not required to bring a facility to a state of good repair for transfer of highway location projects initiated by local agencies. See Chapter 23 – Route Adoptions, for route adoption or transfer of highway location considerations for cases where a route adoption is used to supersede an existing facility and Chapter 24 – Freeway Agreements, for information on the required freeway agreement with the local agency if a route is adopted or relocated.

Negotiations with the local agency should begin as early as possible in the project scoping process. At that early stage, it is important that the local agency has a clear understanding of each party's responsibilities related to the relinquishment of the superseded highway.

The PID and project approval document should include specific recommendations for placing the existing highway in a state of good repair prior to relinquishment. For some projects, the completion of construction may be a number of years away, and it may be too early to determine the scope and strategy of the pavement rehabilitation work that will be required for relinquishment. Nevertheless, the report for the relocation project should cover the anticipated relinquishment work and estimated costs to the extent possible. These costs are important for programming purposes.

As early as possible during the scoping process, the district and local agency should come to a clear understanding of each party's financial responsibilities. The Headquarters Project Delivery Coordinator should be involved when the district and the local agency cannot agree on what constitutes a state of good repair. See Article 5 "Conflict Resolution Process" for the procedures to process difficult relinquishments using the conflict resolution process.

Relinquishments are to be completed as soon as possible after construction of a replacement facility in order to conserve maintenance funds and minimize potential legal liabilities.

Rehabilitation work proposed as a condition of relinquishment must be justified. This includes any corrective work on bridges, culverts, curbs, drainage inlets, pavement, pedestrian facilities, or other facilities that are part of the highway, in order to place the facility into a maintainable condition. Rehabilitation work must comply with the environmental requirements contained in the *Standard Environmental Reference*. In no case is the pavement rehabilitation design life to exceed 10 years.

Pavement Deflection Study

On projects involving rehabilitation of distressed asphalt concrete pavement, a pavement deflection study should be requested from the Headquarters Division of Engineering Services-Materials Engineering and Testing Services. This study is performed to determine the need for an overlay and/or other pavement rehabilitation treatment. It will be used for project scope and cost estimating purposes.

For proper project scoping and cost estimating, the pavement deflection study should be no more than 18 months old. In those instances where relinquishment work will not be undertaken for a number of years, a follow-up pavement deflection study must be performed no more than 12 months prior to construction of the relinquishment project. This is done to determine whether pavement deterioration that occurred since the previous study is significant enough to warrant a new rehabilitation strategy. If a new strategy is required for the repair work, a new agreement may need to be negotiated with the local agency. If the new strategy substantially increases the final scope and costs from those anticipated in the original project approval document, a supplemental project approval document or new project approval document must be prepared. When the deflection study finds that there is no need for pavement rehabilitation, an overlay should not be included in the project. Suitable surface sealing may be included if warranted by the current preventive maintenance program.

Joint Field Review

The deflection study and resultant recommendations are to be based on truck traffic projections that consider the diversion of through traffic as well as local traffic projections. Such projections must be in agreement with the local/regional General Plan for land use. Following receipt of the deflection study recommendations, and before completion of the PID and/or project approval document, a joint field review with the involved city or county should be conducted to eliminate any misunderstandings and to resolve any differences.

Relinquishment Procedures for Collateral Facilities

Most relinquishment actions involve relinquishing collateral facilities that were acquired or built as part of a project to a city or county. These include frontage roads, relocated streets, new streets to maintain service, cul-de-sac adjustments, outer highways such as park-and-ride lots, and appurtenances such as landscaping, slopes, drainage or basin areas.

Collateral facilities are relinquished pursuant to a freeway agreement, a controlled access highway agreement, or a relinquishment agreement. Normally, a freeway agreement or a controlled access highway agreement is used to show the facilities to be relinquished. If these agreements do not adequately show the facilities to be relinquished, then a relinquishment agreement needs to be negotiated with or a resolution should be obtained from the local agency.

Park-and-ride lot relinquishments to cities and counties require preparation of a relinquishment assessment report and a relinquishment agreement. Park-and-ride lots are a congestion mitigation tool and, consequently, the relinquishment assessment report will discuss impacts to operations when the park-and-ride lot is relinquished.

Collateral facilities are normally included in the contract plans. Local agencies participate in the design of these facilities since they will own and operate them after construction.

Relinquishment Procedures for Nonmotorized Transportation Facilities

Nonmotorized transportation facilities constructed as part of a State highway project can also be relinquished to a city or county per *California Streets and Highways Code*, Section 73. Nonmotorized transportation facilities are defined in the *California Streets and Highways Code*, Section 887 and include bikeways and pedestrian facilities such as sidewalks. Since these facilities are not usually shown in freeway agreements or controlled access highway agreements, a relinquishment agreement needs to be negotiated with, or a resolution should be obtained from, the local agency.

Relinquishment Procedures for Park-and-Ride Lots to County Transportation Commissions, Joint Powers Authorities, Transit Districts, and Regional Transportation Planning Agencies

The *California Streets and Highways Code*, Section 73.01 authorizes relinquishments of park-and-ride lots to county transportation commissions, joint powers authorities, transit districts, or regional transportation planning agencies.

The county transportation commission, the joint powers authority, transit district, or the regional transportation planning agency requesting the relinquishment must provide verification that they are either a county transportation commission created pursuant to the *California Public Utilities Code*, Division 12, Chapter 1, a joint powers authority formed for the purposes of providing transportation services, a transit district, or a regional transportation planning agency as stated under the *California Streets and Highways Code*, Section 73.01. Caltrans must first determine if the relinquishment makes sense from a transportation system perspective. The district should inform Headquarters Divisions of Transportation Planning and Traffic Operations of any park-and-ride lot relinquishment request from any of the entities authorized by *California Streets and Highways Code*, Section 73.01.

The District Director, in consultation with Headquarters Divisions of Transportation Planning and Traffic Operations, will consider a park-and-ride lot for relinquishment if it is determined that there is no system need to retain State ownership of the park-and-ride lot based on a transportation system analysis evaluation.

The agency assuming responsibility for the park-and-ride lot must have the fiscal and organizational capacity to operate and maintain the facility to ensure it continues to serve as an effective component of the corridor infrastructure. A project approval document and a relinquishment agreement are required for park-and-ride lot relinquishments to any of the entities authorized by *California Streets and Highways Code*, Section 73.01. The final step in the relinquishment decision process is CTC approval.

The relinquishment assessment report or equivalent report will be developed by district transportation planning and approved by Headquarters Division of Transportation Planning. If there is no State interest in retaining the park-and-ride lot, any of the entities authorized by *California Streets and Highways Code*, Section 73.01 requesting the relinquishment shall agree to maintain, at a minimum, the number of parking spaces provided by Caltrans in the park-and-ride lot at the time of relinquishment. This specific number of parking spaces should be provided at no cost to the park-and-ride lot users. If agencies will be charging for the use of the parking spaces, revenues must not exceed the park-and-ride lot maintenance and operations costs. Relinquishments of park-and-ride lots constructed with federal-aid funds must be approved by the FHWA.

The decision of the appropriateness of the relinquishment must be documented in a letter signed by the District Director to the entity requesting the relinquishment. This letter then serves to initiate the staff workload to execute the relinquishment.

A project approval document and a relinquishment agreement are prepared to document the issues and costs to relinquish the park-and-ride lot, including FHWA approval if applicable. Following the decision to relinquish the lot, the associated cost to relinquish, if any, shall be based on a benefit-cost analysis utilizing a ten-year analysis period, an assumed interest rate based on the escalation rate used in the STIP and SHOPP, and appropriate costs and benefits specific to the portion of the State highway segment in question. If the analysis determines that there is a cost to relinquish, see the "Cost to Relinquish and Benefit-Cost Analysis" heading.

Procedures that Apply to All Relinquishment Types

Relinquishment Agreements

A relinquishment agreement is needed when a transfer of funds, effort, or materials is necessary for the relinquishment. Relinquishment agreements are always required for legislative enactment relinquishments and for park-and-ride lot relinquishments. They are strongly recommended as a best practice for highway superseded by relocation relinquishments. At the district's discretion, a relinquishment agreement can be prepared for any type of relinquishment. They can be used to document all the stakeholders' commitments to the relinquishment after project construction, even if the agreement does not involve the transfer of funds, effort, or materials. Contact the Headquarters Cooperative Agreement Coordinator for questions or concerns regarding relinquishment agreements and available standard templates. For more information, see Chapter 16 – Cooperative Agreements.

Environmental Compliance and Coordination

Compliance with environmental law is required for all relinquishments; the guidance is contained in the *Standard Environmental Reference*.

Coordination with the environmental unit is required just like any other project. Time and resources must be allocated for environmental staff to assess each individual situation and complete any necessary environmental reviews.

Initial Site Assessment

If a relinquishment agreement is prepared, a copy of the initial site assessment (ISA) report, prepared by the district hazardous waste technical specialist or by a consultant working for the local agency, must be provided to Headquarters Division of Design and to the local agency requesting the relinquishment. See the *Standard Environmental Reference* for information on the requirements for performing initial site assessments.

Headquarters Division of Design will coordinate with Headquarters Division of Environmental Analysis for their review and approval of the initial site assessment report and concurrence of the relinquishment agreement language. Full disclosure about the contents of the initial site assessment report must be documented in all relinquishment agreements to avoid parties making different assumptions. It must accurately represent the conditions and cannot be older than one year prior to the date of the expected CTC relinquishment resolution.

If a relinquishment agreement is not required, a copy of the initial site assessment report (approved by the Headquarters Division of Environmental Analysis) must be provided to the local agency. The receipt of the initial site assessment report by the local agency must be acknowledged by the local agency within their resolution accepting the relinquishment.

Cost to Relinquish

Caltrans is responsible for relinquishing roads that are well maintained and in operable condition. Major widening or other improvements (except safety work) should not be considered if the improvement would result in betterment of the facility beyond the state of good repair. In these cases, the city or county may elect to pay the portion of the cost to upgrade the facility geometrically or structurally over and above that which is justified.

Preparation of the Relinquishment Package

Preparation of the relinquishment package for CTC action is the responsibility of the Office of Land Surveys in the Headquarters Division of Right of Way and Land Surveys. Additional instructions on relinquishments are contained in Chapter 6 of the *Right of Way Manual*. The Headquarters Division of Design is responsible for scheduling CTC action.

California Transportation Commission Relinquishment Resolution

The *California Streets and Highways Code*, Section 73 and Section 73.01 require that all relinquishments be made by a CTC resolution.

Lack of Local Agency Agreement

If the local agency cannot reach agreement with the district as to the terms of the relinquishment, and outstanding issues cannot be resolved at the District Director level, the next step may be to proceed to the conflict resolution process. The conflict resolution process is described in Article 5 "Conflict Resolution Process."

Negotiation with Local Agency

The district is responsible for negotiating with the local agency any cost to relinquish. The District Director is ultimately accountable to the CTC to ensure that the negotiated cost to relinquish is in fact in the best interest of the State and not a gift of State funds.

ARTICLE 5 Conflict Resolution Process

Conflict Resolution

At the time of project initiation, an attempt is made to reasonably accommodate the concerns of the local agency through contact with the agency decision makers. A solution to a protest or potential protest is preferable at this time. When a State highway is superseded by relocation, the *California Streets and Highways Code*, Section 73 provides for CTC relinquishment over a protest only if the protesting local agency is given an opportunity to express concerns at a public hearing before the CTC. Caltrans' procedure is to submit a relinquishment to the CTC when the local agency objects for any reason. Caltrans' procedures for processing difficult relinquishments also apply to collateral facilities covered by freeway or controlled access highway agreements and to highways deleted from the State Highway System by legislative enactment.

The local agency objection to a relinquishment is usually based on Caltrans' denial of requested improvements. Caltrans' ability to deny improvements is in accordance with the *California Streets and Highways Code*, Section 73 that states: "This requirement [Caltrans placing the highway in a state of good repair] shall not obligate the department for widening, new construction or major reconstruction, except as the commission may direct." For a State highway that has been superseded by relocation type of relinquishment, Section 73 does require a state of good repair as defined in statute; however, Section 73 does not require that a State highway be relinquished in a state of good repair when it is deleted by legislation.

When the local agency is not satisfied with the district's counterproposals and continues to protest the relinquishment, the district should obtain the objection in writing from the local agency if a written objection has not yet been submitted. If the local agency requests improvements, appropriate plans and details should accompany the protest submittal to enable preparation of a reasonable Caltrans cost estimate.

Initial District/Local Agency Agreement

It is Caltrans' policy to resolve conflicts at the lowest possible level. All efforts should be made to reach agreement with the local agency at the district level. The conflict resolution process for relinquishments is depicted in Figure 25-2. The first step is for the district staff and local agency to try to come to an agreement regarding the terms of the relinquishment. If the district staff cannot reach agreement with the local agency as to the terms of the relinquishment, the next step is to proceed with the District Director review.

District Director Review

The District Director must conduct a comprehensive review of Caltrans' recommendation and the facts and issues. District Directors may seek advice from the Deputy District Directors of Right of Way, Design, Traffic Operations, Maintenance, Environmental, and other functions with responsibility relative to the action. A meeting with the local agency may be necessary. If agreement with the local agency is not obtained, the relinquishment is referred to the Headquarters Division of Design to initiate the conflict resolution process.

The review provides the District Director an opportunity for resolving any impasse that may have developed. The review must determine, but is not limited to, the following:

- The exact nature of the protest and alternatives suggested by the local agency
- The estimated date the delaying issue will be resolved (when delays are due to reasons other than local agency protest, such as litigation involving right-of-way or hazardous waste cleanup)
- Reasonable alternatives (with cost estimates) that might satisfy the local agency or resolve the delay
- The recommended Caltrans position to present to the CTC

The District Director must ensure that appropriate personnel deal with the local agency throughout the process. District functions must work cooperatively, beginning with local agency negotiations at project initiation. If the outstanding issues cannot be resolved at the District Director level, the next step of the conflict resolution process is to request a meeting with the Relinquishment Resolution Committee.

Relinquishment Resolution Committee Review

The role of the Relinquishment Resolution Committee is to review and resolve disputed relinquishments and to provide advice to the Chief Engineer. The Relinquishment Resolution Committee is comprised of the Headquarters Division Chiefs of Design, Transportation Planning, Transportation Programming, Maintenance, Traffic Operations, Environmental Analysis, Right of Way and Land Surveys, and Legal. The Headquarters Division Chief of Design is the leader of the Relinquishment Resolution Committee. Optional members may include CTC staff, an impartial district member and an impartial local agency member.

The Relinquishment Resolution Committee will meet with the district and local agency in an attempt to resolve differences. The Relinquishment Resolution Committee obtains input from the local agency and district. See the following section for an outline of the relinquishment information sheet, which is used to present the relinquishment project to the Relinquishment Resolution Committee.

If an agreement cannot be reached, the issue will be elevated to the Chief Engineer with a recommendation from the Relinquishment Resolution Committee.

Relinquishment Information Sheet

A relinquishment information sheet should be prepared and discussed with the Headquarters Project Delivery Coordinator prior to final signature. The notification to the Relinquishment Resolution Committee will be the approved relinquishment information sheet signed by the project manager. A copy must be sent to the Headquarters Project Delivery Coordinator as well as the Chief of the Office of Land Surveys in the Headquarters of Right of Way and Land Surveys. The relinquishment information sheet must be sufficiently complete to enable the Headquarters Division of Design Chief and the Relinquishment Resolution Committee to make an informed decision and a justifiable recommendation to forward to the CTC.

Purpose and Format

The responsible district prepares a relinquishment information sheet that represents a summary of the efforts to date to effect the relinquishment and serves as the basis by which the Relinquishment Resolution Committee will evaluate relevant issues. The relinquishment information sheet should be a memorandum addressed to the members of the Relinquishment Resolution Committee, with a copy to the Headquarters Project Delivery Coordinator.

Contents

The relinquishment information sheet can be brief, but it must include the following information:

- A description of the highway to be relinquished (for example, its limits, functionality, connections to other State highways or other relinquishments, and the results of the system analysis decision)
- A description of any environmental concerns or restrictions on the highway to be relinquished
- A summary of the unsigned PID that documents Caltrans' estimated cost to relinquish and how those funds will be transferred to the local agency (capital project or funds-contribution-only transfer)
- A short summary of the local agency's primary concerns (for example, lack of maintenance funds, requested improvements, or traffic control devices)
- A description of the local agency proposal, including the costs of any work, financial considerations, or other terms or conditions. Include the following:
  - The local agency's written protest (as an attachment)
  - The district's recommendation for handling these suggestions, with basis and justification for the district's decision

- A list of the main facts concerning the delay, a target date for completion of the maps and of court proceedings, etc. (if the delay is due to a reason other than local agency protest, such as right-of-way litigation or inadequate resources)
- The district's opinion of the potential for settlement of the protest prior to the CTC action meeting (if that is a constraint)
- A chronological history of the relinquishment with pertinent previous official contacts, negotiations, decisions, cooperative agreements, freeway agreement features, disagreements, main reasons for the impasse, etc.
- Clear, legible maps and other attachments as appropriate that show the highway to be relinquished, the condition of the highway, and other features that are of concern to the local agency or Caltrans
- Names, phone numbers, and locations of the appropriate district contact persons

Chief Engineer Review

If an agreement cannot be reached at the Relinquishment Resolution Committee level, the issue will be elevated to the Chief Engineer. The Chief Engineer will be the final step in determining whether it is in the best interest of the State to continue negotiations with the local agency, terminate work on the relinquishment, or proceed with the relinquishment even if the local agency does not agree with the relinquishment conditions. The Headquarters Division of Design Chief will present the findings of the Relinquishment Resolution Committee to the Chief Engineer. The Chief Engineer will obtain information from others as needed.

Submittal to the California Transportation Commission for Public Hearing

There may be situations where Caltrans determines that it is in the best interest of the State to relinquish a road even if the local agency does not agree with the relinquishment conditions. If the Chief Engineer determines it is in the best interest of the State to proceed with the relinquishment, then a public hearing at a CTC meeting will take place. If the Chief Engineer recommends sending the relinquishment for CTC approval, Headquarters Division of Design submits the relinquishment package prepared by the Office of Land Surveys in the Headquarters Division of Right of Way and Land Surveys and the Headquarters Division of Design recommendation letter for inclusion in the CTC briefing book. The relinquishment information sheet and Headquarters Division of Design recommendation letter are also furnished to the district.

The date selected for CTC presentation depends on the state of completeness of the district's initial relinquishment submittal, on when Headquarters Division of Design was notified of the problem, and on the amount of preparation time needed for the CTC submittal package. The local agency will be given an opportunity to protest the terms of the relinquishment at the CTC meeting.

Prior to the CTC meeting where the public hearing will be provided to the local agency, the district shall inform the local agency of the specific CTC procedures to allow time for the local agency representatives to arrange for engineering and/or legal assistance. The district should notify the local agency of the specific CTC procedures prior to the formal written notice required by the *California Streets and Highways Code*, Section 73. The Headquarters Division of Right of Way and Land Surveys, Office of Land Surveys is responsible for sending a notice by certified letter 15 days before the hearing to ensure the local agency has received a 10-day written notice. The contact with the local agency provides a final opportunity for an agreement on the relinquishment. A copy of the report that goes to the CTC is furnished to the local agency with this notification. One or more Caltrans individuals will usually attend the CTC meeting to respond to CTC questions on specific issues.

Public Hearing Provided at California Transportation Commission Meeting

Depending on specific issues, appropriate district and Headquarters representatives will make the presentation to the CTC. The presentation is usually brief, five to ten minutes in length. The local agency is given their public hearing after the presentation by Caltrans. The project manager will be responsible for preparation of wall maps or displays.

The CTC decision may direct Caltrans to do additional work on the facility, proceed with the relinquishment action, or take some other action.

Figure 25-2 Conflict Resolution Process

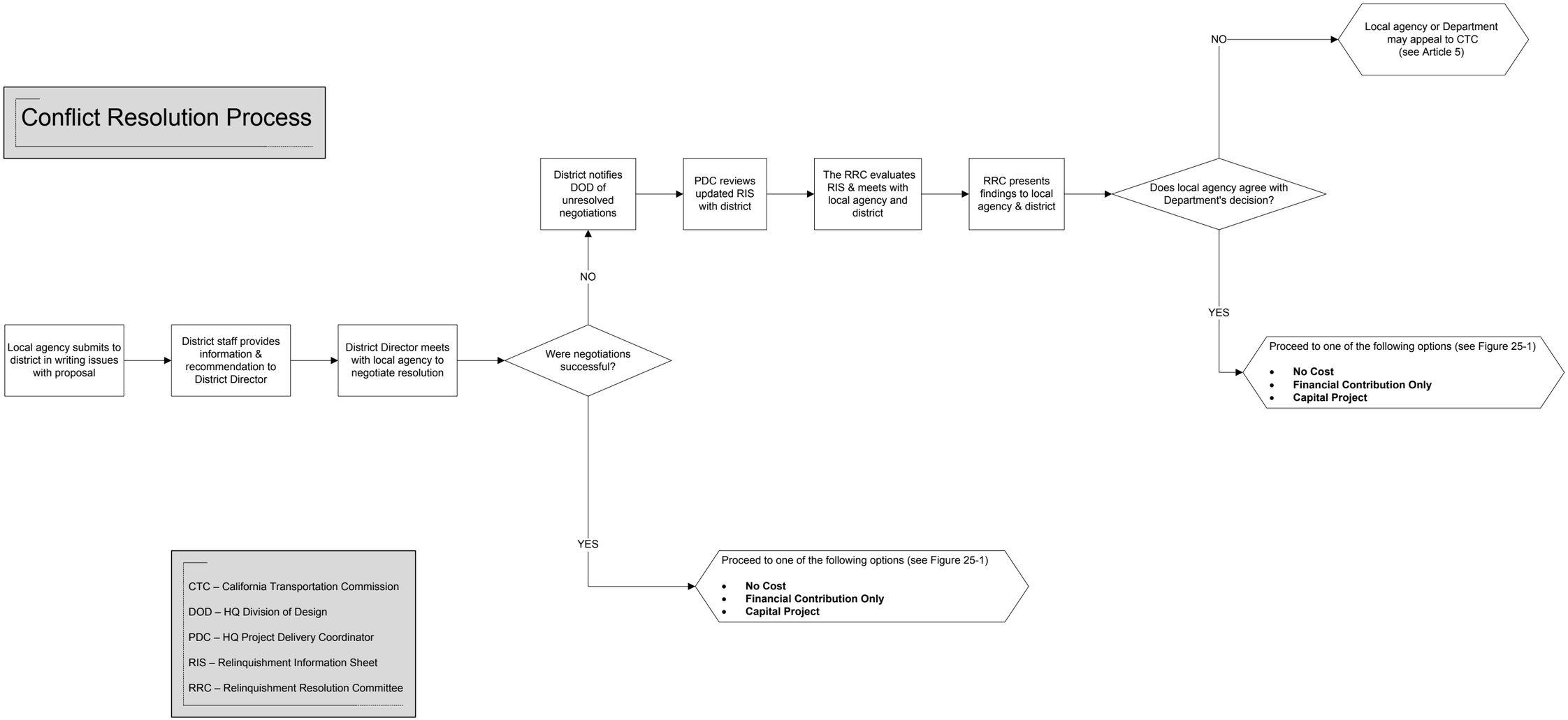

CHAPTER 26 – Disposal of Rights-of-Way for Public or Private Road Connections

Table of Contents

CHAPTER 26 – Disposal of Rights-of-Way for Public or Private Road Connections 26-3
ARTICLE 1 General 26-3
ARTICLE 2 Definitions 26-3
ARTICLE 3 Laws 26-4
ARTICLE 4 Policy 26-5
ARTICLE 5 Essential Procedures 26-5

CHAPTER 26 – Disposal of Rights-of-Way for Public or Private Road Connections

ARTICLE 1 General

Rights-of-way can be disposed of as relinquishments, vacations, or excess property or rights of which access is a part. Access rights are discussed in this chapter. The disposal of easements (vacations) and excess lands are explained in the *Right of Way Manual*, Chapters 6 and 16 respectively. Relinquishments are discussed in Chapter 25 – Relinquishments and Chapter 6 of the *Right of Way Manual*.

ARTICLE 2 Definitions

Rights-of-way – are those properties owned and operated by the Department of Transportation (Caltrans) for transportation purposes. This may include land, access rights, or both.

Access right(s) – is the legal right to access a highway at a specified point in the right-of-way line that serves abutting land ownerships, also known as abutter's rights in Chapter 7 of the *Right of Way Manual*. On freeways direct access to the freeway from private property is prohibited without exception. See *Highway Design Manual (HDM)* Index 104.1 "General Policy."

Excess lands – operating right-of-way that has been analyzed and determined to be of no use for transportation purposes.

Vacations – is an action by the California Transportation Commission (CTC) by which public right of use is removed from right-of-way held as easement. See Chapter 6, section 11, of the *Right of Way Manual* for additional information.

Relinquish – The act of turning over to another entity all interests in State highways deleted by legislative act, State highways superseded by relocation and adjacent public ways which have been constructed as part of a highway project but are not essential to the proper functioning of the State highway facility. This definition is from Chapter 6, Section 12, of the *Right of Way Manual*.

Decertification – is the process by which operating right-of-way is determined to be excess and no longer necessary for transportation purposes. See Chapter 16, Section 5, of the *Right of Way Manual* for additional information.

Disposal – is the selling, or other conveyance, of right-of-way by Caltrans, consistent with statutes and regulations.

Public road – is a road to be maintained for general public use by a public entity, serving multiple property ownerships, having dedicated rights-of-way or easements and connecting with the general system and network of public roads and streets. A public road is one that is eligible to receive construction funding from motor vehicle fuel tax revenues under Article XIX of the California Constitution, or is a road constructed and maintained by another public agency such as the U.S. Department of Agriculture - Forest Service, U.S. Department of the Interior - National Park Service, or the California Natural Resources Agency - California Department of Parks and Recreation, to serve the general public.

Private road – is any road connection other than a public road connection, including driveways. This definition does not preclude a city or county from having jurisdiction and maintenance responsibility over the proposed private road connection.

ARTICLE 3 Laws

California Streets and Highways Code, Section 118 permits Caltrans to sell, contract to sell, sell by trust deed, or exchange real properties or interests in properties, in the manner and upon terms, standards, and conditions established by the CTC when Caltrans determines that any real property or interest acquired by Caltrans for transportation purposes is no longer necessary for those purposes.

Article XIX, section 1, of the California Constitution requires that revenues from taxes imposed by the state on motor vehicle fuels for use in motor vehicles upon public streets and highways be used for specified highway and public mass transit guideway purposes. That same constitutional provision prohibits the sale of disposal of rights in property acquired with gas tax revenues at less than fair market value. (See, Citizens for Hatton Canyon v. Dept. of Transportation (2003) 112 Cal.App.4th 838, 843.)

Under authority granted it by *California Streets and Highways Code*, Section 118, the CTC has adopted Resolution G-98-22 requiring the Caltrans to dispose of its excess property rights at fair market value. "Fair market value" is defined in the Eminent Domain Law as the highest price that would be agreed to by a willing seller and a willing buyer. The full definition of "fair market value" is set forth in *California Code of Civil Procedure*, Section 1263.320.

If an Interstate freeway is involved or if Federal-aid participated in any phase of the project, except capital support, disposal shall be in accordance with *Title 23 Code of Federal Regulations*, Chapter I, Part 710, Subpart D, Section 710.401, et seq. See *Title 23 Code of Federal Regulations* or contact the district programming unit.

ARTICLE 4 Policy

Rights-of-way, including access rights for private or public road connections, will undergo a cross-functional analysis, referred to as decertification, to determine their usefulness to the transportation system. If determined to be excess, they will then be sold at fair market value (see also Chapter 16 of the *Right of Way Manual*).

ARTICLE 5 Essential Procedures

Establish Transportation Purpose

When a request for a new public or private road connection is received, the district needs to thoroughly consider all possible impacts the proposed disposal or break in access control may have on the state facility and local traffic circulation. The following is a partial list of items and responsibilities that should be taken into account by the district when considering an access opening in a controlled access highway:

To be evaluated by the district design team:

- Will the proposed access opening be safe for the segment of highway and the local streets and roads impacted?
- Will the access opening have a negative effect on the operations/capacity of that segment of highway either now or in the foreseeable future (20 years)?
- Can the negative effects be mitigated?

To be evaluated by district design, right-of-way and traffic analysis teams:

- Is the opening for a private or public road?
- Who receives the preponderance of benefits of the proposed access opening?
- Is it a private property owner or owners or the public at large?

See the distinction between public road and private road in Article 2 "Definitions."

Determine Method of Disposal

At a minimum a Director's Deed is needed to dispose of access rights. Approval of the Director's Deed is a CTC action. If an existing highway or easement is involved, see Chapter 6 of the *Right of Way Manual* for additional procedures. If excess lands are involved, see Chapter 16 of the *Right of Way Manual* for additional procedures.

Appraise the Rights to be Sold

At this point the district right-of-way team will determine the fair market value of the rights-of-way being conveyed to permit the access opening as required by the California Constitution, statutes, and policies described in Article 3 "Laws."

Except for public road connections (see Chapter 27 for new public road connections), Caltrans must obtain compensation for the fair market value of the access rights based on an appraisal of the parcel or parcels "before and after" the construction of the opening.

In addition, the private property owner or the developer must pay for the cost of any modification or mitigation measures (operational, environmental, or other) required to accommodate the proposed new access.

Caltrans may request the private property owner or developer to construct highway improvements in addition to those required to mitigate the proposed new access. If Caltrans requests this type of additional highway improvement, a credit offset that is equal to the cost of those additional improvements will be made against the value of the access rights.

Compensation to Caltrans for changes in rights-of-way will be no less than the value of the rights-of-way described previously, less any credit offset due to improvements requested as described in the previous paragraph. However, under no circumstances will a credit offset cause the compensation to be less than the federal funding used to

purchase the property rights being conveyed. The private property owner or developer is also responsible for payment of any other costs incurred by Caltrans, including, but not limited to expenses and overhead costs associated with the decertification request.

Process to Decertify and Dispose of Right-of-Way

The responsible district functional unit (generally design) prepares the request for District Director approval to decertify and dispose of portions of rights-of-way on operating facilities. Since right-of-way information is required, the project engineer (PE) must coordinate the preparation of the request with the district right-of-way unit.

The request to the District Director should have a cover memorandum asking for the District Director's approval. Spaces should be provided for the District Director's signature (marked APPROVED), and for appropriate endorsement by the originating unit (marked APPROVAL RECOMMENDED BY:). The memorandum should include a brief description of the need and justification for the decertification and disposal as well as supporting data to justify the action.

Supporting Data

Limit the supporting data attachment to the pertinent data from the following:

- Parcel identification
  - Excess parcel number
  - Area of parcel or description of access rights
  - Federal-aid right-of-way project number used for parcel acquisition
  - Expenditure authorization number
- Justification and explanation
  - Briefly describe the parcel, the reason for disposition of the parcel or access rights, the reason the rights-of-way are not needed, and any additional background information.
- Exhibits
  - Location map.
  - A right-of-way map with calculated dimensions and bearings of new lines or revised access control, with the subject parcel or parcels outlined in color.
  - An "as-built" plan with the parcel outlined in color and a dimension showing the minimum clearance between the highway facility's final edge of pavement and the new right-of-way line. The minimum clearance

should be consistent with adjacent segments of the facility and should comply with *Highway Design Manual* Index 304.2.

- Cross-sections to show important features.
- If federal funding in any phase was involved on a parcel that is declared excess property, one set of exhibits is needed for the district transmittal request to the Federal Highway Administration (FHWA). For FHWA approval of a change in access control, the district request to the FHWA needs two sets of exhibits. One informational copy of any request to decertify and dispose of rights-of-way, whether or not federal funding is involved, with exhibits, should be sent to Headquarters Division of Design, Office of Project Support.

- Findings that:
  - The parcel (or access rights) is not needed for transportation purposes in the future (indicate if highway is Federal-aid).
  - The retained right-of-way is adequate for the facility, under current standards.
  - The disposal will not adversely affect the traffic operations of the highway.
  - The parcel is not suitable for use in restoring, preserving, or improving the scenic beauty next to the highway, consistent with the intent of the *Highway Beautification Act of 1965.*
  - Reservations or exceptions are to be assumed by the buyer (utilities, easements, etcetera).
- Include the following statement:
  - Pursuant to guidance from the FHWA net proceeds from the sale of any decertified property will be deposited in the State Highway Account for Title 23 use, and are, therefore, not subject to federal reimbursement.
- Method of disposal
  - Public sale, or
  - Direct sale to adjoining owner - a negotiated sale based on current appraised fair-market value, or
  - Direct conveyance to another governmental agency for public use, either with payment to the State, or without payment to the State.
- Estimate or appraisal of value of property rights
  - Include the estimate or appraisal prepared by the district right-of-way unit of the value of the property or property rights to be disposed of. If a new public road connection is involved and no compensation from the property owner(s) or developer is proposed, a supporting evaluation and justification of this determination should be included that reflects the considerations of the value of access rights discussed in Article 4 “Policy.” Information regarding new public road connections is in Chapter 27.

- Applicable bikeway data
  - For specific compliance requirements relating to bikeways and the abandonment of right-of-way, see Chapter 31 – Nonmotorized Transportation Facilities.
- Categorical Exemption/Categorical Exclusion Determination Form
  - An approved Categorical Exemption/Categorical Exclusion Determination Form must accompany all requests to district right-of-way for decertification of access control and disposal of operating rights-of-way.

Headquarters Division of Design Notification

When a District Director approves a request to decertify and dispose of right-of-way, one informational copy with exhibits should be sent to:

Headquarters Division of Design, Office of Project Support.

Federal Highway Administration Involvement

Decertification of access control and/or disposal of operating rights-of-way on the Interstate System require FHWA approval. Additionally, FHWA approval may be needed for decertification of access control and/or disposal of operating rights-of-way for highways off the Interstate System when federal funds were used in any phase of the project. See the latest *Stewardship and Oversight Agreement on Project Assumption and Program Oversight* between the Federal Highway Administration, California Division and Caltrans for the project actions assumed by Caltrans and the project actions where FHWA has retained their authority as well as the detail associated with the various oversight responsibilities.

The responsible unit shall discuss the proposed decertification and disposal with the Headquarters Project Delivery Coordinator as well as the FHWA Field Operations Engineer to facilitate processing and to avoid excessive work on proposals that might not be feasible or have complicating issues. When decertification of access control and/or disposal of operating rights-of-way require FHWA approval, the PE sends a request to the FHWA for their approval following the District Director's approval.

Under FHWA environmental regulations, disposal of excess right-of-way is a categorically excluded action. A Categorical Exemption/Categorical Exclusion Determination Form must accompany all requests for decertification of access control and disposal of operating right-of-way. For further details, see the *Standard Environmental Reference (SER)*.

Obtain Director's Deed Approval

After the necessary approvals are obtained, the PE sends the information to the district right-of-way unit which prepares the documents for presentation to the CTC. The district excess land unit in right-of-way is responsible for processing the necessary Director's Deed or other conveyance document for approval by the CTC.

CHAPTER 27 – Access Control Modification

Table of Contents

CHAPTER 27 – Access Control Modification 27-3
ARTICLE 1 Introduction and Definitions 27-3
Definitions 27-3
ARTICLE 2 Laws 27-6
General 27-6
Federal Statutes 27-7
California Constitution 27-7
California Statutes 27-8
ARTICLE 3 Policies 27-12
General 27-12
Stewardship and Delegation of Federal Highway Administration Authority 27-12
Access Control 27-12
Value of Change in Access Rights to Private Property 27-14
Design Practice 27-15
Road Maintenance Responsible Party 27-16
California Transportation Commission Consent 27-16
California Transportation Commission Consent Not Required 27-17
Request to California Transportation Commission 27-17
Right-of-Way Changes 27-18
ARTICLE 4 Essential Procedures 27-24
General 27-24
Roles and Responsibilities 27-24
Relevant Project Development Processes 27-25
Conceptual Approval 27-26
Exceptions to Design Standards 27-28
ARTICLE 5 Interstate System 27-29
Access Control Modifications Requiring Federal Highway Administration Review and Action 27-29
Projects That May Not Require Federal Highway Administration Review and Action 27-30
Federal Highway Administration New or Modified Access Approval Process 27-31

Table of Figures

Figure 27-1 Existing Separations 27-19
Figure 27-2A Existing Interchange – Add Crossroad 27-20
Figure 27-2B Existing T-Intersection at Grade – Modifications 27-20
Figure 27-3A Existing Interchange – Add Crossroad to Frontage Road Outside Access Control 27-21
Figure 27-3B Existing Interchange – Extend Crossroad to Frontage Road Inside Access Control 27-21
Figure 27-4 Existing Diamond Interchange – Modify to Split Diamond Interchange 27-22
Figure 27-5 Existing Interchange – Ramp Modification Without New Access 27-23

CHAPTER 27 – Access Control Modification

ARTICLE 1 Introduction and Definitions

Caltrans is responsible for improving and preserving the State Highway System (SHS) to serve interregional traffic on the State's transportation corridors; therefore, access control rights are preserved and connection points on freeways and expressways are kept to a minimum. Access control modification is permitted only after careful analysis to determine that no detrimental effect will occur that would impact facility operation. This chapter discusses the laws, policies and essential procedures for access control modification.

Definitions

Access control – the full or partial restriction of access to owners or occupants of abutting lands to or from a highway. Also see *Highway Design Manual (HDM)* Topic 104 "Control of Access."

Access opening – any opening through the right-of-way line that serves abutting land ownerships whose remaining access rights have been acquired by the State (also see the definition for "private road").

Access point – each entrance or exit point, including locked gate access, to the highway. For example, a diamond interchange configuration has four access points.

Access right – the legal right to access a highway at a specified location from abutting land ownerships, also known as "abutter's rights" in Chapter 7 of the *Right of Way Manual*.

Controlled access highway – an arterial highway with at least partial control of access, which may or may not be divided or have grade separations.

Decertification – the process by which operating right-of-way is determined to be excess and no longer necessary for transportation purposes. See Chapter 16, Section 5, of the *Right of Way Manual* for additional information.

Determination of Engineering and Operational Acceptability – a Federal Highway Administration (FHWA) determination that a proposed new or modified access point is acceptable.

Disposal – the selling, or other conveyance, of right-of-way by Caltrans consistent with statutes and regulations. For additional information, see Chapter 16, Section 5, of the *Right of Way Manual*.

Driveway – a paved portion of a public street providing an unobstructed passage from the roadway to an offstreet area used for driving, servicing, parking, or otherwise accommodating motor vehicles. *California Streets and Highways Code*, Section 5870 (b)

Expressway – an arterial highway for through traffic which may have partial control of access, but which may or may not be divided or have grade separations at intersections. *California Streets and Highways Code*, Section 257

Fair market value of access rights – the difference between the fair market value of the benefited parcel or parcels without the access opening and the fair market value of the same property with the access opening.

Freeway – a divided arterial highway for through traffic with full control of access and with grade separations at intersections. *California Streets and Highways Code*, Section 257

Interstate System Access Change Request – the term used to describe the formal request made to the FHWA regarding a proposed new or modified access on the Interstate System.

Interchange spacing – the distance between interchanges, measured from center of interchange to center of interchange. It is measured from the nearest interchange structure in the case of a split diamond interchange or similar situation.

Local agency – the entity ultimately responsible for operations, maintenance, and tort liability of the public road connection to a freeway or controlled access highway, usually a city or county.

Modified access – any modifications to an existing access opening or access point, including any change in the interchange configuration even though the number of actual points of access may not change. Examples would be replacing one of the direct ramps of a diamond interchange with a loop or a hook ramp or relocating exit or entrance points.

New access – any additional access points to the State Highway System (interchanges, intersections, ramps, or locked gates).

New Public Road Connection – the name of the California Transportation Commission (CTC) action necessary for a public road to connect to a freeway or controlled access highway. CTC action is not necessary to connect a State highway to a freeway.

Private road or private driveway – a way or place in private ownership and used for travel by the owner and those having express or implied permission from the owner but not by other members of the public.

Public road – a road that is eligible to receive construction funding from motor vehicle fuel tax revenues under Article XIX of the *California Constitution* or a road that is constructed and maintained by another public agency such as roads on tribal lands and those maintained by the U.S. Department of Agriculture - U.S. Forest Service, the U.S. Department of the Interior - National Park Service, or the California Natural Resources Agency - California Department of Parks and Recreation to serve the general public. City streets, county roads, and public highways are collectively referred to as public roads in this chapter.

Right-of-way – property (land and/or access rights) owned and operated by Caltrans for transportation purposes.

Additional Definitions

A number of definitions that are relevant to the discussions in this chapter come from *Deputy Directive DD-23-R1 – Roles and Responsibilities for Development of Projects on the State Highway System*. See the directive for additional details.

Implementing agency – is that entity charged with successful completion of each project component as follows:

1. Project initiation document (PID)
2. Completion of all permits and environmental studies
3. Preparation of plans, specifications, and estimate
4. Acquisition of rights-of-way, including, but not limited to, support activities
5. Construction, construction management and engineering, including surveys and inspection

Owner-operator – is that entity ultimately responsible for the operation, maintenance, and tort liability of a facility. *California Government Code*, Section 14520.3 (b) indicates that Caltrans is the owner-operator of the State Highway System.

Project – is that temporary endeavor undertaken to plan, develop and construct an improvement, modification, or addition to the State Highway System.

Project sponsor – the project advocate and the person or entity responsible for securing funding for the preparation and completion of all project components, including all mitigation required due to the access control modification. Caltrans is the sponsor for all projects funded solely from the State Highway Operations and Protection Program (SHOPP) and most projects funded from the Interregional Improvement Program.

ARTICLE 2 Laws

General

The State Highway System has been constructed with a large investment of funds to control access in order to ensure the safety and operational integrity of the highways. By way of legislation, the California State Legislature provides Caltrans and the CTC with its expectations for managing access control modifications to ensure complete evaluation of all proposed access control modifications so that current and future traffic safety and operations are not compromised, to protect the investment in any improvements made, and to permit the ultimate development of a full freeway or expressway when traffic and other conditions require. The United States Code contains the federal expectations regarding national interests on the Interstate System. This article presents key statutes pertaining to access control modification.

Federal Statutes

Title 23 United States Code Section 111(a)

Section 111 (a) states:

> In General.—All agreements between the Secretary and the State transportation department for the construction of projects on the Interstate System shall contain a clause providing that the State will not add any points of access to, or exit from, the project in addition to those approved by the Secretary in the plans for such project, without the prior approval of the Secretary.

California Constitution

California Constitution Article XIX, Sections 1 and 2

Article XIX states:

> SECTION 1. The Legislature shall not borrow revenue from the Highway Users Tax Account, or its successor, and shall not use these revenues for purposes, or in ways, other than those specifically permitted by this article.
>
> SEC. 2. Revenues from taxes imposed by the State on motor vehicle fuels for use in motor vehicles upon public streets and highways, over and above the costs of collection and any refunds authorized by law, shall be deposited into the Highway Users Tax Account (Section 2100 of the Streets and Highways Code) or its successor, which is hereby declared to be a trust fund, and shall be allocated monthly in accordance with Section 4, and shall be used solely for the following purposes:
>
> (a) The research, planning, construction, improvement, maintenance, and operation of public streets and highways (and their related public facilities for nonmotorized traffic), including the mitigation of their environmental effects, the payment for property taken or damaged for such purposes, and the administrative costs necessarily incurred in the foregoing purposes.
>
> (b) The research, planning, construction, and improvement of exclusive public mass transit guideways (and their related fixed facilities), including the mitigation of their environmental effects, the payment for property taken or damaged for such purposes, the administrative costs necessarily incurred in the foregoing purposes, and the maintenance of the structures and the immediate right-of-way for the public mass transit guideways, but excluding the maintenance and operating costs for mass transit power systems and mass transit passenger facilities, vehicles, equipment, and services.

California Statutes

California Code of Civil Procedure Section 1263.320

Section 1263.320 states:

> (a) The fair market value of the property taken is the highest price on the date of valuation that would be agreed to by a seller, being willing to sell but under no particular or urgent necessity for so doing, nor obliged to sell, and a buyer, being ready, willing, and able to buy but under no particular necessity for so doing, each dealing with the other with full knowledge of all the uses and purposes for which the property is reasonably adaptable and available.
>
> (b) The fair market value of property taken for which there is no relevant, comparable market is its value on the date of valuation as determined by any method of valuation that is just and equitable.

California Government Code Section 14520

Section 14520 states:

> The commission shall advise and assist the Secretary of Transportation and the Legislature in formulating and evaluating state policies and plans for transportation programs in the state.

California Streets and Highways Code Section 23.5

Section 23.5 states:

> "Freeway" means a highway in respect to which the owners of abutting lands have no right or easement of access to or from their abutting lands or in respect to which such owners have only limited or restricted right or easement of access. If, in the judgment of the commission or the director, the public interest would be advanced thereby, a freeway, as defined herein, may be denominated a "controlled access highway". In all other respects, the "controlled access highway" shall be subject to all provisions of this code pertaining to freeways.

California Streets and Highways Code Section 100.2

Section 100.2 states:

> The department is authorized to enter into an agreement with the city council or board of supervisors having jurisdiction over the street or highway and, as may be provided in such agreement, to close any city street or county highway at or near the point of its interception with any freeway or to make provision

for carrying such city street or county highway over or under or to a connection with the freeway and may do any and all work on such city street or county highway as is necessary therefore. No city street or county highway shall be closed, either directly or indirectly, by the construction of a freeway except pursuant to such an agreement or while temporarily necessary during construction operations. No city street, county road, or other public highway of any kind shall be opened into or connected with any freeway unless and until the commission adopts a resolution consenting thereto and fixing the terms and conditions on which such connection shall be made and the commission may give or withhold its consent or fix such terms and conditions as, in its opinion, will best subserve the public interest.

California Streets and Highways Code Section 100.3

Section 100.3 states:

From and after the adoption of a resolution by the commission declaring any section of a state highway to be a freeway, the highway described in such resolution shall have the status of a freeway for all purposes of Section 100.2.

Such declaration shall not affect private property rights of access, and any such rights taken or damaged within the meaning of Section 19 of Article I of the California Constitution for such freeway shall be acquired in a manner provided by law.

No state highway shall be converted into a freeway except with the consent of the owners of abutting lands or the purchase or condemnation of their right of access thereto.

California Streets and Highways Code Section 118

Section118 states:

(a) If the department determines that real property or an interest therein, previously or hereafter acquired by the state for highway purposes, is no longer necessary for those purposes, the department may sell, contract to sell, sell by trust deed, or exchange the real property or interest therein in the manner and upon terms, standards, and conditions established by the commission. The payment period in a contract of sale or sale by trust deed shall not extend longer than 10 years from the time the contract of sale or trust deed is executed, and a transaction involving a contract of sale or sale by trust deed to private parties shall require a downpayment of at least 30 percent of the purchase price, except as follows:

(1) For improved and unimproved real property sold or exchanged for the purpose of housing for persons and families of low or moderate income, as defined in Section 50093 of the Health and Safety Code, the payment period

shall not exceed 40 years and the downpayment shall be at least 5 percent of the purchase price. All contracts of sale or sales by trust deed, for the purpose of housing for persons and families of low or moderate income shall bear interest. The rate of interest for the contract or sale shall be computed annually, and shall be the same as the average rate returned by the Pooled Money Investment Board for the past five fiscal years immediately preceding the year in which the payment is made. The contract of sale and sales by trust deeds shall not be utilized if the proposed development or sale qualifies for financing from other sources and if the financing makes feasible the provision of low- and moderate-income housing.

(2) Improved residential property sold to a local public agency pursuant to paragraph (1), if subsequently sold or transferred to a nonprofit housing organization, shall have the endorsement of the city in which the parcels are located, or the county if the parcels are located in an unincorporated area, that the housing shall remain at affordable housing costs to persons and families of low or moderate income and very low income households for the longest feasible time, but for not less than 15 years, as determined by the city or county, as applicable. By endorsing the sale, the city or county accepts the responsibility of ensuring the housing remains affordable. The local public agency shall record in the office of the county recorder covenants or restrictions implementing this subdivision. Notwithstanding any other provision of law, the covenants or restrictions shall run with the land and shall be enforceable against the original purchaser from the department and successors in interest.

(b) A conveyance under this section shall be approved by the commission and shall be executed on behalf of the state by the director and the purchase price shall be paid into the State Treasury to the credit of any fund, available to the department for highway purposes, which the commission designates.

(c) Any such real property or interest therein may in like manner be exchanged, either as whole or part consideration, for any other real property or interest therein needed for state highway purposes.

California Streets and Highways Code Section 250

Section 250 states:

It is hereby declared to be essential to the future development of the State of California to establish and construct a statewide system of freeways and expressways and connections thereto without regard to present jurisdiction over the highways, roads, and streets that might be included. It is the intent, further, that the California Freeway and Expressway System be completed with provision for control of access to the extent necessary to preserve the value and utility of the facilities to be constructed.

California Streets and Highways Code Section 254

Section 254 states:

> As specific locations are determined by the commission for portions of state highways included in the California freeway and expressway system, the commission shall designate the particular portion as a part of the California freeway and expressway system and the planning and design of such highways shall include provision for such access control as the department and the commission determine essential to protect the investment of any improvements made and to permit the ultimate development of a full freeway or an expressway when traffic and other conditions require. Such declaration by the commission shall have the effect of declaring the particular portion affected a freeway within the meaning of Section 100.2.

California Streets and Highways Code Section 257

Section 257 states:

> For the purpose of this article only, and to distinguish between the terms "freeway" and "expressway," the word "freeway" shall mean a divided arterial highway for through traffic with full control of access and with grade separations at intersections, while the word "expressway" shall mean an arterial highway for through traffic which may have partial control of access, but which may or may not be divided or have grade separations at intersections.

California Streets and Highways Code Section 5870 (b)

Section 5870 (b) states:

> "Driveway" means a paved portion of a public street providing an unobstructed passage from the roadway to an offstreet area used for driving, servicing, parking, or otherwise accommodating motor vehicles.

ARTICLE 3 Policies

General

Caltrans manages the State Highway System to maximize the public's return on investment in California's transportation infrastructure while at the same time minimizing the system's impacts on the environment. As owner-operator, Caltrans has the statutory and inherent obligation to ensure that all modifications or additions to the State Highway System, regardless of the project sponsor or funding source, are:

- safe, operational, maintainable, compatible and of good value.
- providing for the efficient multimodal movement of people and goods.
- in the best interest of the general public.
- developed and constructed in compliance with laws and regulations that govern the use of State and federal transportation funds.
- developed and constructed in partnership with vested stakeholders.

Stewardship and Delegation of Federal Highway Administration Authority

Approval of the report that justifies an Interstate System access change has been delegated to Caltrans. However, new or modified access points on the Interstate System still require approval by the FHWA. The types of reports and related procedures along with the steps to obtain Final Approval from FHWA are covered in Article 5 "Interstate System."

See the latest *Stewardship and Oversight Agreement on Project Assumption and Program Oversight* between the FHWA, California Division and Caltrans for the project actions assumed by Caltrans and the project actions where FHWA has retained their authority as well as the detail associated with the various oversight responsibilities.

Access Control

Direct access to freeways from private property is prohibited without exception. All connections to freeways are by interchanges so the abutting private property is served by frontage roads or streets connected to interchanges.

Partial interchanges on the Interstate System will not be allowed except in extreme circumstances or when a full interchange is to be built in phases and included in the "cost-constrained" 20-year regional transportation plan.

Access openings on expressways are normally for at-grade intersections and interchanges. Access from private property is permitted on expressways, but the size and number of openings are held to a minimum. Parcels that have access to another public road, including frontage roads to the expressway, are not allowed direct access to the expressway.

Private property rights of access shall not be affected by the conversion of a highway to an expressway or expressway to a freeway. All abutting properties must be given access via local roads, frontage roads and/or access openings. If any access rights are taken or damaged, said access rights shall be acquired in a manner provided by law. No State highway shall be converted into a freeway except with the consent of the owners of abutting lands or the purchase or condemnation of their access rights thereto. (See *California Streets and Highways Code*, Section 100.3.)

Federal Highway Administration National Policy

The FHWA National Policy, issued on August 27, 2009 states:

> It is in the national interest to preserve and enhance the Interstate System to meet the needs of the 21st Century by assuring that it provides the highest level of service in terms of safety and mobility. Full control of access along the Interstate mainline and ramps, along with control of access on the crossroad at interchanges, is critical to providing such service. Therefore, FHWA's decision to approve new or revised access points to the Interstate System must be supported by substantiated information justifying and documenting that decision.

For more information, see *Federal Highway Administration – National Policy*.

Conventional Highways

Conventional highways generally do not have access control. Private roads and driveways are allowed through the encroachment permit process.

Public and Private Road Determinations

A key in analyzing proposals for access control modification is to determine whether a road was a public road or a private road at the time the CTC made the freeway declaration. The fact that a roadway has never become a "county road" or a "city street" would not necessarily prevent it from being a "public road." The road does not have to be paved to be considered a public road.

Questions can be asked to determine whether or not a road is a "public road." At the time of freeway declaration, if the answer to any of the following questions is yes, then the road can be considered a public road:

- Was the road maintained at public expense?
- Did the road have dedicated rights-of-way or easements?
- Did the road serve more than one property owner with at least one of the ownerships not abutting the adopted route?
- Is the road eligible to receive construction funding from motor vehicle fuel tax revenues under Article XIX of the *California Constitution*?
- Was the road constructed and is it maintained by another public agency, such as roads on tribal lands and those maintained by the U.S. Forest Service, the National Park Service, or the California Department of Parks and Recreation to serve the general public?

A county road or city street that exists on paper in an approved subdivision map or as part of a master plan is considered to be nonexistent and should not be proposed as a new connection until the road or street is included in an approved general plan and there is a funding commitment. The funding commitment must include a specific schedule for both the connection and a usable segment of the local road that is connected with the general system and network of public roads.

The district project files, project initiation document (PID), draft project report (DPR), and project report (PR) should clearly document the facts used in making a public road determination when the determination is otherwise not found as a public road of record.

Value of Change in Access Rights to Private Property

Project sponsors should be aware that payment will be required by Caltrans when there is an increase in the appraised value of a parcel or parcels as a result of a change in access rights. Caltrans will require payment from private property owners when they are granted access to State highways.

Caltrans purchases the access rights prior to constructing a freeway or expressway. There is a cost to the State to create an opening in the existing access control. Before a new private access to an expressway or freeway may be constructed, the existing operating rights-of-way (typically from right-of-way fence to pavement edge) for said access must be decertified. Once the decertification process has been completed, the access rights can be transferred to the private property owner or developer (see Chapter 26 – Disposal of Rights-of-Way for Public or Private Road Connections).

The value of the property increases once the access rights have been transferred from Caltrans. The private property owner or developer must provide payment to Caltrans based on an appraisal which determines the fair market value of the access rights being transferred. The fair market value of access rights is based on a "before and after" appraisal of the parcel or parcels being benefited.

In addition to the compensation for the access rights, the private property owner or developer is required to pay for the cost of any modification or mitigation measures (such as operational or environmental impacts) to accommodate the proposed new private access.

Caltrans may request that the private property owner or developer construct highway improvements in addition to those required to accommodate the proposed new private access. If Caltrans requests this type of additional highway improvement, a credit that is equal to the cost of those additional improvements will be made against the appraised value of the access rights.

Payment to Caltrans for access rights will be no less than the value of the access rights described in this section, less any credit for Caltrans requested highway improvements.

Design Practice

Private access openings have specified widths that are incorporated into deed descriptions. However, when the CTC grants an access control modification, it is practice to not specify a width of opening. The width matches the proposed roadway opening or the proposed local road right-of-way. If the local road is subsequently widened, the width is adjusted to fit the new plan without further CTC action.

Road Maintenance Responsible Party

It is required that all public road connection requests to the CTC be made by a city, county government, or other public agency and for the requesting agency to maintain the public road within the State right-of-way, giving the State a responsible party to enter into a maintenance agreement with. Detailed information about maintenance agreements can be found in the *Maintenance Agreements Manual*. The public road connection is further formalized by inclusion in the required superseding controlled access highway agreement or freeway agreement.

Exceptions may be allowed in unusual circumstances if the local agency objects to maintaining the public road within the State right-of-way. In such a case, CTC consent would be requested as an "other public highway of any kind" (*California Streets and Highways Code*, Section 100.2) but there would be no freeway or controlled access highway agreement with the affected city or county. The CTC resolution would cover any needed ownership, maintenance, or control provisions that will also be included in the encroachment permit.

California Transportation Commission Consent

CTC consent is needed for access control modifications on controlled access highways, but not modifications to existing public road connections. The following circumstances discuss the conditions when CTC consent is required for access control modification:

- Access break – when access control has been acquired and the new connection will involve a break in the access control.
- Connection as part of initial construction of freeway or expressway – when an interchange or at-grade connection with a new public road that was not in existence at the time of the freeway adoption (or not shown as a future road in the route adoption map) is to be included with the construction of a new freeway or expressway.
- New connection to existing freeway or expressway – when any access control modification (interchange or at-grade connection) to an already constructed freeway or expressway is proposed or if ramps are to be added at an existing overcrossing or undercrossing.
- Private access to public road conversion – conversion of an existing private access opening to a public road connection.
- Temporary connection – when there is a temporary connection of a new public road to a freeway or expressway. The CTC resolution of consent may be worded to put the local agency and adjacent property owners on notice that

the connection is temporary and that it may be closed at the time of further freeway construction or closed by a specified date.

- Reconnecting a previously closed connection – when reconnecting a previously closed connection to a constructed freeway.
- Private road connection – private road connections to an expressway, or through access control to a road that crosses the freeway. These are handled as right-of-way transactions and are processed through the CTC by way of Director's Deeds (see Chapter 26 – Disposal of Rights-of-Way for Public and Private Road Connections).

California Transportation Commission Consent Not Required

CTC consent is not required for the following conditions:

- Modification – when modifying existing public road connections.
- Existing road as frontage road – when a new local road or street is to be connected to an existing highway that is clearly to remain as a frontage road after construction of the freeway. The connection will be handled by the encroachment permit process. The encroachment permit should note the same conditions (if any) depicted on the freeway agreement or controlled access highway agreement.
- Crossing with separate grade – when the new road will not be "opened into or connected with" the freeway but will merely cross at separate grades. Either the resolution of change procedure must be followed or a superseding freeway agreement must be executed.
- Unconstructed freeways – Unconstructed freeways, or other public roads that are depicted on a route adoption map at the time of the freeway declaration (also referred to as "freeway adoption") may be approved for connection to a freeway through negotiation between Caltrans and the local agency.
- Closure of a connection – when an existing connection is closed. However, a superseding freeway agreement must be executed.
- Stage construction – when an existing access is closed or relocated temporarily as part of stage construction.
- Adding ramps – when ramps are being added to an existing partial interchange with at least two existing ramps providing access to both directions of the freeway; public access to and from the freeway has already been furnished.

For illustrations of cases that do and do not require CTC consent, see Figures 27-1 through 27-5.

Request to California Transportation Commission

After project approval, the district submits the draft CTC consent request for access control modification (New Public Road Connection book item) with a location map to

the Headquarters' Division of Design, Office of Project Support. If applicable, FHWA Final Approval of the proposed new or modified access should also be submitted. The Office of Project Support will finalize the consent request and location map for submittal to the CTC. At this stage, the local agency has executed a freeway or controlled access highway agreement, with provision for the access control modification. Execution of the agreement by the State is withheld until after CTC consent.

The CTC may require that construction of the public road start at the time Caltrans grants a permit for its connection to the State highway. The CTC may also impose the condition that the authorization is voided if construction of the public road is not undertaken within a specified time period.

CTC consent is not required for a future connection; however the local agency must still make a formal request to Caltrans. The following notification procedure should be followed.

Formal Notice to Local Agency

Upon receipt of a formal resolution requesting approval to construct a road across an adopted freeway alignment, a formal notice must be given by the district to the local agency. The formal notice covers the following points and considerations:

- State the name of the street and the location by post mile.
- State the date on which the CTC adopted the freeway route and that the construction of the local road prior to freeway construction does not create any special obligation on the State's part to later carry this road across the freeway, connect it with the freeway or to make provisions for the traffic that will be carried on the local road.
- State that there can be no physical connection of the local road with the freeway unless the CTC formally consents to the connection first.
- State that Caltrans cannot execute a freeway agreement showing a connection of the local road with the freeway without first obtaining CTC consent of the connection.

Right-of-Way Changes

Interchange projects usually involve changes in right-of-way and access control. Refer to Chapter 26 – Disposal of Rights-of-Way for Public or Private Road Connections for required FHWA approval for disposal of right-of-way.

Figure 27-1 Existing Separations

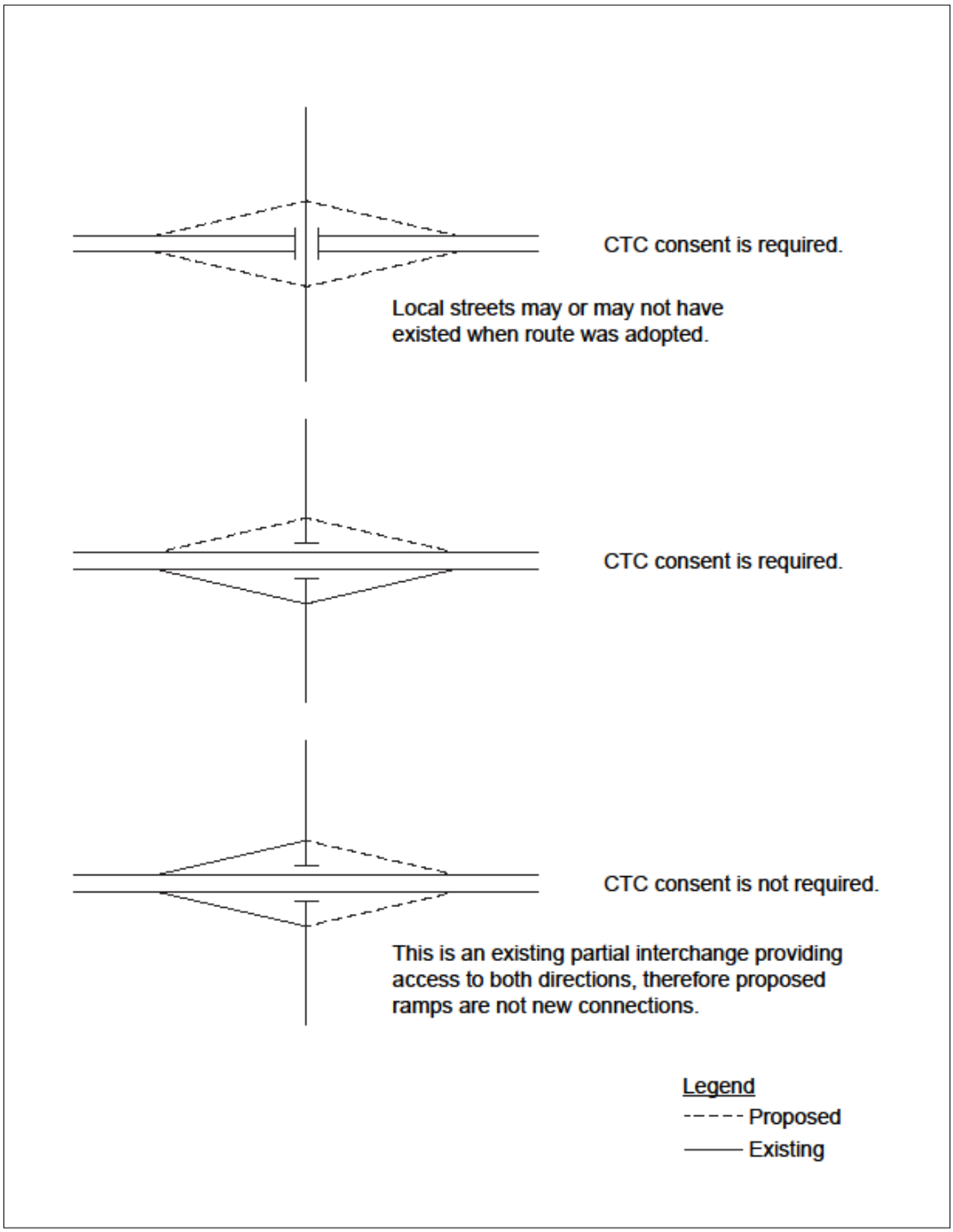

Figure 27-2A Existing Interchange – Add Crossroad

Figure 27-2B Existing T-Intersection at Grade – Modifications

Figure 27-2A

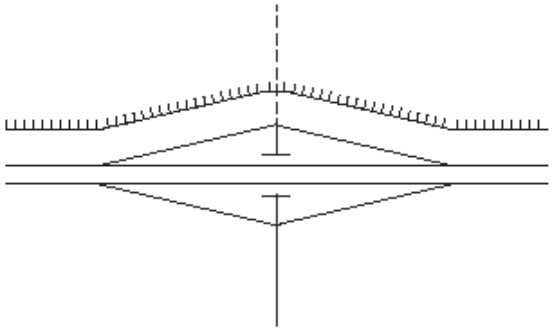

CTC consent is required if access control has been acquired and the new road involves a break in the access control.

Figure 27-2B

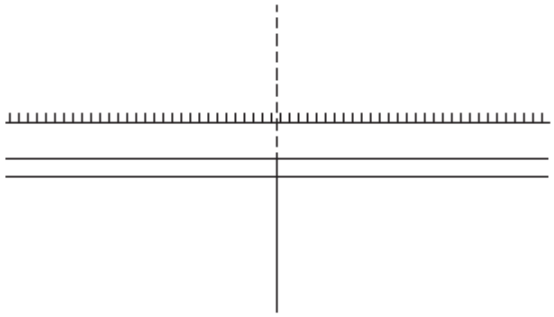

CTC consent is required if access control has been acquired and the new road involves a break in the access control <u>or</u> if a private access opening is being converted to a public road.

<u>Legend</u>
- - - - - Proposed
——— Existing
ıılılılıı Access control

Figure 27-3A Existing Interchange – Add Crossroad to Frontage Road Outside Access Control

Figure 27-3B Existing Interchange – Extend Crossroad to Frontage Road Inside Access Control

Figure 27-3A

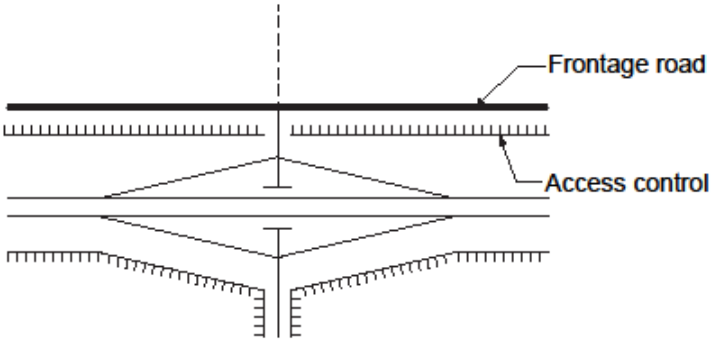

CTC consent is not required, since the new road does not involve break in the access control.

Figure 27-3B

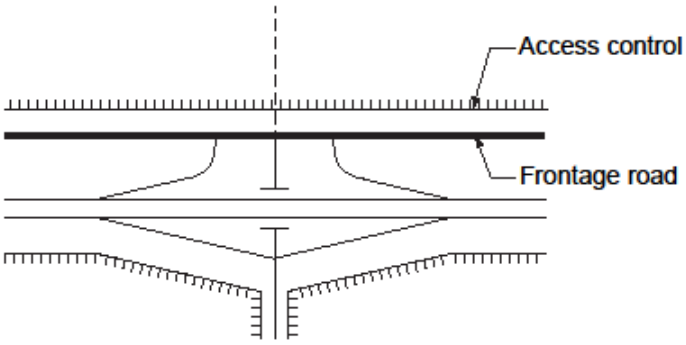

CTC consent is required since the new road involves a break in the access control.

Legend
----- Proposed
——— Existing
ıılılılıı Access control

Figure 27-4 Existing Diamond Interchange – Modify to Split Diamond Interchange

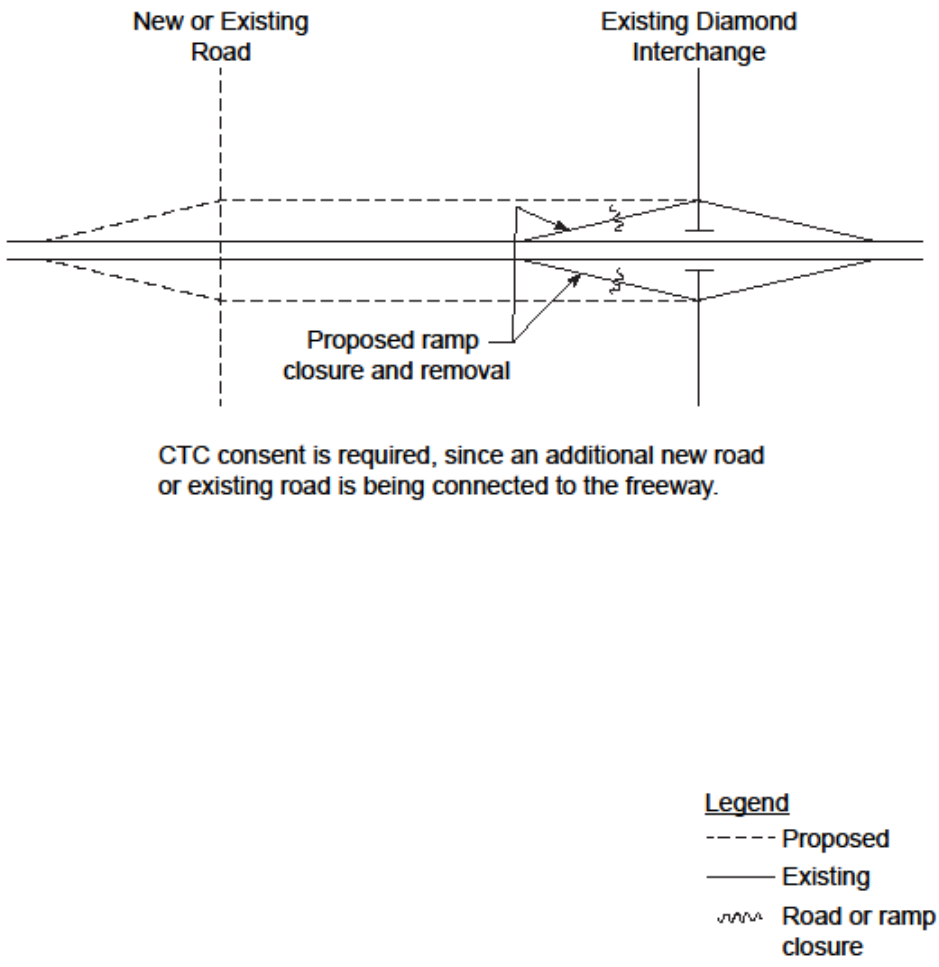

Figure 27-5 Existing Interchange – Ramp Modification Without New Access

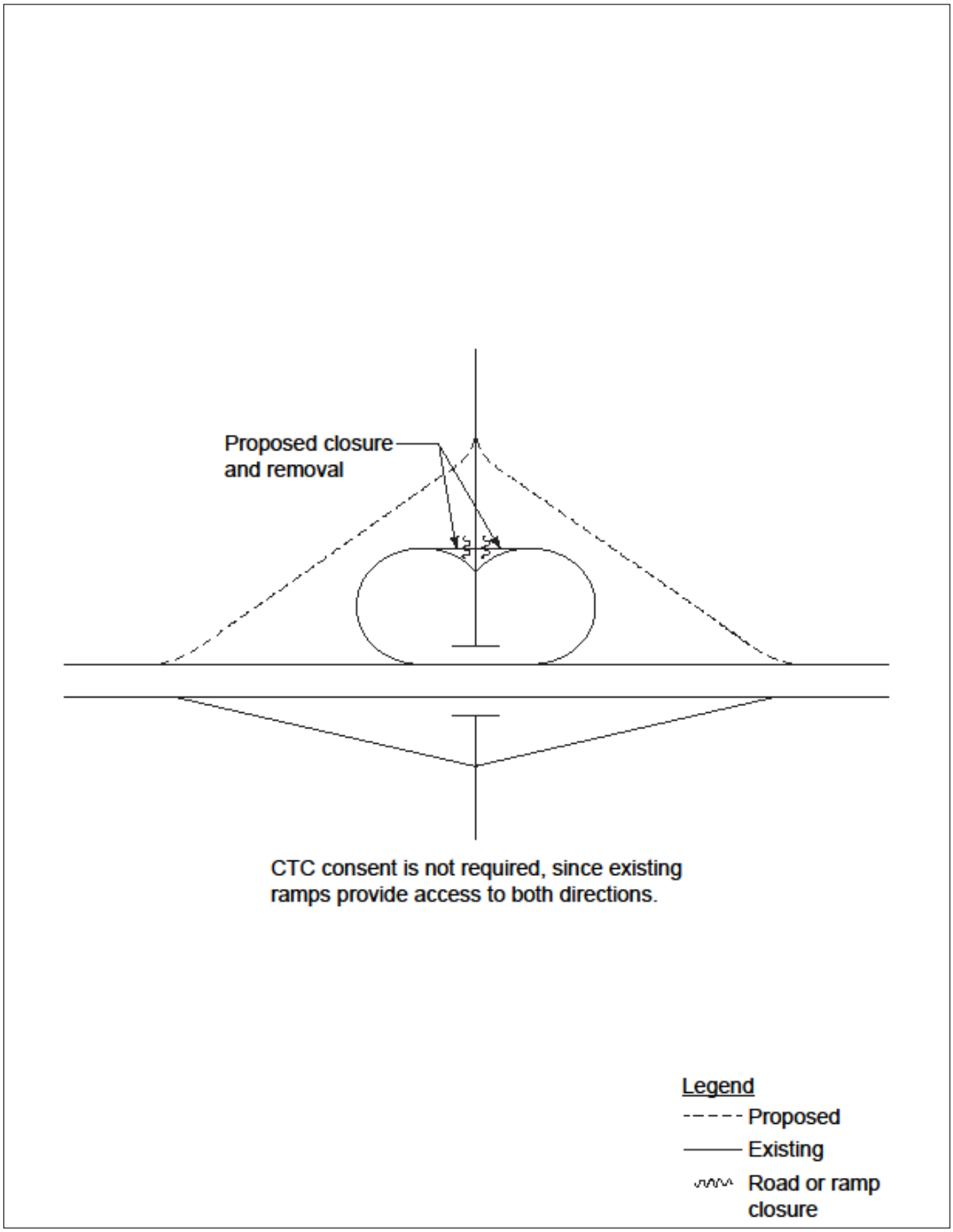

ARTICLE 4 Essential Procedures

General

This article discusses the essential procedures required for the approval of access control modifications.

Roles and Responsibilities

Project Sponsor

The project sponsor selects an implementing agency for each project component and is the customer of the implementing agency. It is imperative for the project sponsor to have early and continual discussions with Caltrans to establish the viability of the proposal, the procedural requirements, and the schedule for various project deliverables.

The project sponsor is responsible for securing approval of access control modifications and should fully understand the requirements to obtain CTC consent.

The project sponsor is responsible for ensuring that affected local agencies have a complete understanding of State requirements and engineering standards at an early stage of project planning to ensure the safety and operational performance of the State Highway System are not hindered.

Local Agency

The local agency must support the proposed access control modification and must serve as the project sponsor when an access control modification is funded by a developer.

The local agency must request the access control modification and make a firm funding commitment on a specific schedule by formal resolution, which typically takes place during the PID phase. In cases where funding specifics are not available during the PID phase, the formal resolution may be deferred to a later stage. However, the CTC cannot act on an access control modification request until the formal resolution requirement has been met.

The local agency should be aware that the CTC action in granting an access control modification will set terms and conditions for the modification. This usually consists

of specifying local and State responsibilities for right-of-way, construction costs, and the time frame for completion of construction.

Caltrans

Because Caltrans is responsible for protecting the public's investment in the State Highway System, Caltrans must review all proposed highway improvements that are funded-by-others.

After the project sponsor submits a PID for proposing an access control modification, Caltrans should give the project sponsor either a written reason why the proposal is unacceptable or a written confirmation in the form of a signed PID that the proposal is worthy of further evaluation as an access control modification.

Relevant Project Development Processes

The project development process for an access control modification is the same as for other projects, with information justifying the access control modification to be included in the PID, DPR, and PR (See Chapter 8 – Overview of Project Development).

The project sponsor, local agency, and developer should meet with Caltrans at the beginning of the project development process to determine engineering feasibility and to discuss the proposed construction financing. The initial discussions should confirm that there are no obvious engineering or financial conditions that would prevent continuation of the study or inhibit CTC consent for the access control modification.

Current policy requires that all PIDs developed for the State Transportation Improvement Program (STIP) and special funded projects must use the project study report-project development support (PSR-PDS) process, unless use of a project study report (PSR) is approved by the District Director. The PSR-PDS is a streamlined PID document that does not require the same level of engineering detail as a PSR. See Chapter 9 – Project Initiation and Appendix S – Preparation Guidelines for Project Study Report-Project Development Support Project Initiation Document.

The PSR-PDS does not provide enough detailed information for Caltrans to determine if the proposed access control modification is conceptually acceptable.

When the PSR-PDS is used as the PID for a proposed access control modification, it is essential that the DPR includes all information necessary for conceptual approval in addition to the instructions in Appendix K – Preparation Guidelines for Project Report. Due to the extent of the studies required, the complexity of these projects, and the amount of analysis required to adequately evaluate an access control modification, the DPR must also include information normally included in a PSR and as further described in the following sub-article. Also see Chapter 9 – Project Initiation and Appendix L – Preparation Guidelines for Project Study Report.

The DPR must include information regarding the access control modification and necessary mitigation strategies needed to implement the access control modification for competing alternatives; it must also have an approved draft environmental document under the California Environmental Quality Act (CEQA) and/or National Environmental Policy Act (NEPA), as appropriate.

Should the project sponsor desire to utilize the PSR process instead of the PSR-PDS process, an exception request from the project sponsor must be submitted to and authorized by the District Director.

Due to the requirements for CTC consent and because of Caltrans' responsibility for maintenance and tort liability, an encroachment permit by itself is not suitable for submitting a request for an access control modification. A project engineering evaluation report (PEER) is not detailed enough to support an access control modification due to the complexity and the significant amount of analysis required for these projects. However, an encroachment permit is necessary for construction of the project.

For access control modification, Caltrans will negotiate directly with public agencies that constructed and maintained public roads, such as roads on tribal lands and those maintained by the U.S. Forest Service, the National Park Service, or the California Department of Parks and Recreation.

If the access control modification is on the Interstate System, see Article 5 "Interstate System."

Conceptual Approval

The project sponsor is responsible for obtaining Caltrans' conceptual approval of the proposed access control modification. The following conditions must be satisfied

where applicable before access control modifications are considered for conceptual approval. Since this information is not normally included in a PSR-PDS, the DPR must satisfy these conditions even if CTC consent for an access control modification is not required.

- Description – The proposal must describe:
  - Existing and proposed public road connections
  - Configuration of existing and proposed interchanges (including adjacent interchanges)
  - Distances to adjacent public road connections
  - Projected impacts on adjacent public road connections
  - Freeway or expressway mainline, including at least the first adjacent existing or proposed interchange on both sides of the proposed change in access, and crossroad traffic volumes (average daily traffic and design hourly volume) including turning movements for current year, implementation year, and design year (20 years from implementation year)
  - Number of mainline and crossroad lanes, including auxiliary lanes and collector-distributor roads
- Justification – It must be demonstrated that the existing connections (at-grade or interchange) and/or local roads and streets in the corridor can neither provide the necessary traffic capacity nor be improved to satisfactorily accommodate the design-year traffic demands.
- Transportation system management – It must be demonstrated that reasonable transportation system management components (such as ramp metering, mass transit, and high-occupancy vehicle facilities), geometric design, and alternative improvements to the highway cannot provide the necessary traffic capacity to satisfactorily accommodate the design-year traffic demands without the proposed access control modification.
- Consideration of Alternatives – It must be shown that all reasonable alternatives for design options and locations have been assessed.
- Future transportation system management – Future transportation system management components should be provided for in all alternatives if a future need is identified.
- Interchange Spacing – The proposal must meet the interchange spacing and weaving design standards contained in the *HDM*.
- No Significant Adverse Impact – The proposal must not have a significant adverse impact on the safety and operation of the highway facility based on an analysis of current and future traffic.
- Connection to Public Road – The proposal must only connect to a public road and provide for all traffic movements.
- Local Planning – The proposal must consider and be consistent with local and regional land use and transportation plans.

- Coordination with Development – The proposal must take into consideration new or expanded development and demonstrate appropriate coordination between the development and related local circulation elements or otherwise required transportation system improvements.

Prior to proposing exceptions to design standards, all of the conditions for conceptual approval must be addressed and documented. Any proposed exceptions to design standards must be approved prior to Caltrans granting conceptual approval.

The environmental studies and documentation for an access control modification must include traffic impacts on the State highway resulting from the access control modification. The environmental studies and documentation must also document all mitigation measures necessary to mitigate the effect of the access control modification. The features of the proposed access control modification to the State highway, and the proposed environmental document under CEQA and/or NEPA, must be acceptable to Caltrans.

The items to be addressed in the PSR or DPR should be determined in consultation with the Headquarters Project Delivery Coordinator.

For projects utilizing the PSR-PDS, Caltrans grants conceptual approval of access control modifications with the approval of the DPR. Caltrans grants conceptual approval of access control modifications for projects utilizing the PSR with the approval of the PSR.

For access control modifications on the Interstate System, see Article 5 "Interstate System."

Exceptions to Design Standards

Requests for exceptions to design standards must be made in accordance with Chapter 21 – Exceptions to Design Standards.

Access Openings on Expressways

Access openings on expressways must meet the standards covered in *HDM* Index 205.1 – Access Openings on Expressways.

Interchange Spacing Requirements

Interchange spacing must meet the standards covered in *HDM* Index 501.3 – Spacing.

All of the conditions listed in the Sub-article "Conceptual Approval" must be addressed and incorporated into the fact sheet for exceptions to mandatory design standards, preferably as an attachment. It is also preferred to cover all other nonstandard features in the same fact sheet. Questions on the content and format of the fact sheet, along with any necessary variations to accommodate the unique information required to justify an exception to interchange spacing design standards, should be discussed with the Headquarters Project Delivery Coordinator.

Prior to requesting any exceptions to design standards for interchange spacing on the Interstate System, all of the FHWA policy requirements referenced in the Sub-article "Federal Highway Administration New or Modified Access Approval Process" must be addressed and documented.

Weaving Requirements

Weaving lengths must meet the standards covered in *HDM* Index 504.7 – Weaving.

ARTICLE 5 Interstate System

New or modified access points on the Interstate System require approval by the FHWA in addition to the Caltrans approval previously described. Since FHWA's approval constitutes a federal action, the NEPA process is required regardless of the funding source. Coordination with the FHWA transportation engineer who oversees the district projects to refine the scope of the analysis and to make an initial determination if the proposed access control modification is reasonable, is strongly recommended. This will assist the project analysis in being performed in a cost-effective manner and provide for a more effective review of the access control modification request by the FHWA.

Access Control Modifications Requiring Federal Highway Administration Review and Action

It is vital that the proponent discuss the proposal with FHWA since some of the listed access changes may not necessarily need detailed analysis to address the FHWA policy requirements referenced in the Sub-article "Federal Highway Administration New or Modified Access Approval Process."

The following access changes to Interstate System facilities require FHWA approval:

- New freeway-to-freeway interchange
- New service interchanges providing access between a non-freeway local roadway network (arterial, collector, or local road) and the Interstate
- Modification of freeway-to-freeway interchange configuration (for example, adding new ramps or abandoning/removing ramps)
- New partial interchanges or new ramps to-from continuous frontage roads that create a partial interchange
- Modification of existing interchange configuration, such as adding a loop to a diamond interchange
- Completion of basic movements at partial interchange (for example, completing a partial diamond interchange by adding a ramp)
- Locked gate access
- Abandonment of ramps or interchanges
- Access to special use lanes such as high-occupancy vehicle, high-occupancy toll (HOT) or truck only lanes (from the street network) within the Interstate System
- Relocation of a terminal of a ramp to a different local road
- Changes in operation of managed-lane access to general-purpose access to the Interstate

Generally, a change in the interchange configuration is considered a change in access even though the number of access points may not change. For example, replacing one of the direct ramps of a diamond interchange with a loop, or changing a cloverleaf interchange into a fully directional interchange is considered modified access for the purpose of applying FHWA policy.

Projects That May Not Require Federal Highway Administration Review and Action

Although approval may not be needed, coordination with the FHWA California Division Office is recommended to determine if any analysis is required based on the context of the project. If it is determined that these changes may require an analysis of the planning, environmental, design, safety, and operations of the proposed improvements, the project manager and project engineer should coordinate with the FHWA California Division Office to determine the type and extent of analysis required. The following access control modifications to Interstate System facilities may not require approval under FHWA policy:

- Shift of a ramp's location within the same interchange configuration, which results in ramp spacing that meets the design standards contained in the *HDM*.

If the interchange is reconfigured in such a way that the travel patterns change with the same number of access points, coordination of the project should be performed with the FHWA.

- Addition of lanes to an on-ramp. However, based on coordination with the FHWA, analysis of the potential consequences of this change on the safety and operational performance of the Interstate may be required.
- Addition of left-turn storage lanes, right-turn storage lanes, and through travel lanes at the terminus of existing ramps.
- Relocation or shifting of the existing on-ramp or off-ramp termini (such as moving the ramp end that connects with the local road) along the same roadway.
- Addition of a single auxiliary lane between two adjacent interchange ramps where the single auxiliary lane does not function as a mainline travel lane.
- Modification of the length of acceleration or deceleration lanes involved with any ramp.
- Improvements or changes to intersection control at ramp termini with local roads should be reviewed to ensure that the changes in the signalization do not result in queue spillback on to the mainline lanes of the Interstate and that sufficient storage is provided.
- Implementation of ramp metering or other active control of vehicles entering the Interstate System.
- Construction of new signing, striping, and/or resurfacing of an Interstate on-ramp or off-ramp, where geometric features are not changed.
- Installation of roadside guardrail and concrete barriers (such as for resurfacing and safety projects).
- Construction of overpasses or grade separation structures without ramps along Interstate facilities. The approval of air-rights over Interstate facilities is addressed as part of the location and design concept acceptance with the NEPA process and approval of plans, specifications, and estimate.
- Changes in access between managed lanes and general purpose lanes on the Interstate.
- Temporary modification to an interchange required for stage construction.

Coordination with the FHWA California Division Office is strongly recommended.

Federal Highway Administration New or Modified Access Approval Process

FHWA approval is a two-step process to help manage risk and provide flexibility. The two-step process helps identify fatal flaws and ensure the investment in subsequent phases of the project is not wasted. See the FHWA *Interstate System Access Informational Guide* for details.

Step 1 – Determination of Engineering and Operational Acceptability

Determination of Engineering and Operational Acceptability in accordance with FHWA policy requirements is referenced in the heading "Federal Highway Administration Policy Requirements" near the end of this article. An Interstate System Access Change Request that addresses all FHWA policy requirements is submitted to the FHWA California Division Office. An approved PID with the required information and a cover letter requesting the Determination of Engineering and Operational Acceptability for the access control modification serves as the Interstate System Access Change Request. Once the FHWA is satisfied that the proposed access change meets policy requirements, the FHWA will send a Determination of Engineering and Operational Acceptability.

Current policy requires that all PIDs developed for the STIP and special funded projects must use the PSR-PDS process, unless use of a PSR is approved by the District Director. However, the PSR-PDS does not typically provide enough detailed information for Caltrans or the FHWA to determine if the proposed access control modification is conceptually acceptable.

When the PSR-PDS is used as the PID, the project sponsor has two choices:

1. Prepare a separate report that addresses all of the FHWA policy requirements. This report may be called a Determination of Engineering and Operational Acceptability Report, Interstate Modified Access Report, Interstate New Interchange Report or any title that is descriptive of the proposed access control modification. This report may follow the PSR outline (See Chapter 9 – Project Initiation and Appendix L – Preparation Guidelines for Project Study Report) or follow the outline provided in the FHWA *Interstate System Access Informational Guide*. This separate report when approved and combined with a cover letter requesting the Determination of Engineering and Operational Acceptability for the access control modification serves as the Interstate System Access Change Request. Once the FHWA is satisfied that the proposed access change meets policy requirements, the FHWA will send a Determination of Engineering and Operational Acceptability.

   This separate report must be summarized in the DPR, and not attached to the DPR or draft environmental document.

Or

2. Ensure that the DPR addresses all of the FHWA policy requirements in addition to the information normally included in the DPR. See Chapter 10 – Formal Project Studies and Appendix K – Preparation Guidelines for Project Report. The DPR must include information regarding the access control modification for each competing alternative and document the impacts and necessary mitigation strategies needed to implement each competing alternative; it must also have an approved draft environmental document under NEPA. The DPR when approved and combined with a cover letter requesting the Determination of Engineering and Operational Acceptability of the access control modification serves as the Interstate System Access Change Request. Once the FHWA is satisfied that the proposed access change meets policy requirements, the FHWA will send a Determination of Engineering and Operational Acceptability.

   Since this is later in the project development process, project sponsors must be aware that completed design and environmental studies would be at risk if a Determination of Engineering and Operational Acceptability cannot be made. The FHWA may not be satisfied that the proposed access control modification meets all FHWA policy requirements, and may require the submittal of additional information.

If the project sponsor uses the PSR process instead of the PSR-PDS process, the PSR must contain all the required information for both Caltrans' conceptual approval and the FHWA to evaluate the proposed access modification on the Interstate System.

Due to unforeseen circumstances, there may be instances where a Determination of Engineering and Operational Acceptability request must be submitted to the FHWA after completion of the environmental process. Project sponsors must be aware that completed design and environmental studies would be at risk if a Determination of Engineering and Operational Acceptability cannot be made. Furthermore, additional environmental documentation may be required to address any substantive changes in the project scope as a result of the Determination of Engineering and Operational Acceptability review.

The time frame for a Determination of Engineering and Operational Acceptability needs to be taken into account when the project's schedule is established. At least 60 days should be allowed for the FHWA to review and respond; however, it is strongly suggested to establish a reasonable turnaround timeline that is agreed upon with the FHWA prior to each submittal. Once the FHWA determines that the proposal is acceptable in regard to engineering and operations, a formal letter will be sent to the District Director.

Step 2 – Final Approval

An Interstate System Access Change Request for Final Approval in the form of a letter is submitted to the FHWA California Division Office. The request should reference the previous Determination of Engineering and Operational Acceptability, detail any changes that have occurred since the determination was granted, and include a copy of the final environmental document with a copy of the record of decision. Once the Final Approval is granted, the FHWA will send a formal letter to the District Director.

Approval of an access control modification request will be given only after a finding of engineering and operational acceptability and completion of the environmental process. The request for FHWA Final Approval of the proposed access control modification can be submitted only after the appropriate planning, air quality conformity, and environmental processes under NEPA have been completed, and are determined to be complete and correct by Caltrans. The NEPA process must be followed regardless of the funding source since FHWA Final Approval of the proposed access control modification constitutes a federal action.

The proposal should also be included in the Transportation Improvement Program (TIP)/State Transportation Improvement Program (STIP) and long-range transportation plan (LRTP) prior to Final Approval. Furthermore, any commitments to be completed by Caltrans, a local agency or private entity should also be included in the Transportation Improvement Program/State Transportation Improvement Program and long-range transportation plan and may be made conditions for Final Approval.

If there are changes after the engineering and operational acceptability has been given and documented with a formal letter, the Final Approval request must include supporting documentation detailing any changes in the scope from the information submitted when the Determination of Engineering and Operational Acceptability was originally requested. The explanation for the changes should include any relevant technical information that would have been needed for the original Determination of Engineering and Operational Acceptability request.

Federal Highway Administration Policy Requirements

Interstate System Access Change Requests need to address the appropriate issues and provide the information necessary to allow the FHWA to make an informed decision considering the potential consequences of a change in access. The eight policy requirements in Section 2.7 of the FHWA *Interstate System Access Informational Guide,* must be addressed.

Approval Duration and Re-evaluation

An approved access control modification on the Interstate System should be re-evaluated whenever there is a significant change in conditions, design, or if the project has not progressed to construction within eight years after receiving a Final Approval of the access control modification from the FHWA. The NEPA re-evaluation period is different from the Interstate System access re-evaluation. A written evaluation of the final environmental impact statement (EIS) must be prepared if major steps to advance the action have not occurred within three years of the approval, see *Title 23 Code of Federal Regulations*, Section 771.129 for details.

If after eight years, the project has not progressed to construction, the access re-evaluation should contain an updated analysis explaining the changes that have occurred since the initial Determination of Engineering and Operational Acceptability.

If a project that previously received Final Approval from the FHWA is significantly changed (like changes to the: design, land use, traffic volumes, roadway configuration or design, and environmental commitments), then an access re-evaluation is required. The scope of the changes and the factors justifying the change will determine the level of analysis required.

The process for determining the nature and scope of the access re-evaluation needed should consider the changes to the project since the Final Approval from the FHWA that would affect the safety, operations, or design criteria that were used in the prior approval.

CHAPTER 28 – Resolutions of Necessity

Table of Contents

CHAPTER 28 – Resolutions of Necessity 28-3
ARTICLE 1 General 28-3
ARTICLE 2 Statutes 28-3
Right to Appear Before the California Transportation Commission 28-3
ARTICLE 3 Policy 28-4
Requests for Appearance Need Study 28-4
Project Reviews 28-4
ARTICLE 4 Procedures 28-5
District Director Review 28-5
District Condemnation Evaluation Meeting with Property Owner 28-5
Appearance Information Sheet and Fact Sheet 28-6
Action Options by Chief, Division of Design 28-7
Condemnation Panel Review 28-7
Condemnation Panel Review Meeting Arrangements 28-7
Stenographic Reporter 28-8
Meeting Participants 28-8
Inform Owner Prior to Meeting 28-8
Meeting Procedures 28-8
Condemnation Panel Discussion 28-9
Panel Report with Recommendation 28-9
Combined Meetings 28-9
Meeting California Transportation Commission Scheduling 28-10
Owner Notification for
California Transportation Commission Meeting Appearance 28-10
District Participation 28-10
District and Deputy District Directors' Involvement 28-10
Importance of This Process 28-11

CHAPTER 28 – Resolutions of Necessity

ARTICLE 1 General

Right-of-way needed for the State Highway System (SHS) is generally acquired through purchase at fair market value. Where the State cannot reach an agreement with the property owner on the value or amount of land to be acquired, Caltrans is allowed to request a condemnation action from the California Transportation Commission (CTC). This allows for the timely delivery of Caltrans' programs by securing the property rights needed to proceed with the transportation project.

Each year a number of property owners request an appearance before the CTC to challenge the resolution of necessity (RON) that will authorize acquisition of their property through eminent domain.

A resolution of necessity is a formal document adopted by the CTC that authorizes Caltrans to acquire property by eminent domain.

ARTICLE 2 Statutes

When the State is required to condemn property, condemnations must be authorized by a resolution of the CTC in accordance with the *California Streets and Highways Code*, Section 102 and pursuant to *California Code of Civil Procedure*, Section 1245.230.

Right to Appear Before the California Transportation Commission

Under Eminent Domain Law, a property owner whose property is to be considered for a resolution of necessity has the right to appear before the CTC to contest the resolution on any of the following grounds (*California Code of Civil Procedure*, Sections 1245.030, 1245.230 and 1245.235):

- Does public interest and necessity require the proposed project?
- Is the proposed project planned or located in the manner that will be most compatible with the greatest public good and the least private injury?

- Is the property sought to be condemned necessary for the proposed project?

In addition, an offer to purchase in accordance with *California Government Code*, Section 7267.2 must have been made to the owner of record.

ARTICLE 3 Policy

Requests for Appearance Need Study

Each year a number of property owners appear before the CTC to challenge the resolution of necessity that will authorize acquisition of their property by eminent domain. If the property owners address issues or alternatives that Caltrans did not adequately consider during the project development process or during the preparation preceding the resolution of necessity, doubt might be cast on the need for the property acquisition as proposed and important projects may be unnecessarily delayed. Consequently, when the resolution of necessity involves the appearance of the property owner before the CTC, Caltrans' management must thoroughly weigh and explore the issues so that Caltrans' positions are fully justified.

Project Reviews

To accomplish a thorough evaluation of the issues and to look for opportunities for resolution, Caltrans with concurrence from the CTC, has established a two-tiered review of the project. The first evaluation, to be held by the District Director, is termed the district Condemnation Evaluation Meeting (formerly termed "First Level") and if necessary, a second evaluation, termed the Condemnation Panel Review Meeting (formerly termed "Second Level") is to be held by the Condemnation Panel appointed by the Chief Engineer.

The district Condemnation Evaluation Meeting and the Condemnation Panel Review Meeting shall be conducted separately to afford the district every opportunity to discuss the project and to negotiate a settlement with the property owner. Combining the district Condemnation Evaluation Meeting and Condemnation Panel Review Meeting shall be considered only under unusual circumstances.

The district Condemnation Evaluation Meeting must be held far enough in advance of the Condemnation Panel Review Meeting to allow adequate time for the district to consider and evaluate recommendations discussed at the district meeting. Results of

all evaluations are to be included in the appearance information sheet (AIS) and the district's presentation during the Condemnation Panel Review Meeting.

The procedures to carry out this process are discussed in detail in Article 4. The outcome of this process is either an amicable resolution between Caltrans and the property owner, or a well-based recommendation to the Chief Engineer by the Condemnation Panel to proceed to the CTC to request an action on the resolution of necessity.

ARTICLE 4 Procedures

In order to ensure timely authorization for these resolutions, the following procedures should be followed.

District Director Review

When a property owner challenges a proposed resolution of necessity and requests an appearance before the CTC, the District Director shall personally review the facts, issues, and recommended Caltrans position. The review must include, but is not limited to, the following:

- The allegations raised and alternatives suggested by the property owner.
- Reasonable alternatives that might reduce or eliminate the parcel take.
- The recommended Caltrans position in the event that the CTC denies the resolution of necessity and the parcel cannot be condemned.

District Condemnation Evaluation Meeting with Property Owner

The purpose of the district Condemnation Evaluation Meeting is to identify and resolve all the property owners' issues, if possible, at the district level. To do so requires thorough preparation and open consideration of the property owners' concerns. Mandatory attendance and participation of design and right-of-way managers, as well as the District Director are necessary components for success. Clear, concise and complete responses to all of the property owners' concerns must be communicated at the time of the Condemnation Evaluation Meeting or promptly thereafter, in writing to the property owner if additional review is necessary.

The District Director shall ensure that appropriate personnel work with the owner throughout the acquisition process in an effort to resolve the owner's concerns. The

district's right-of-way and design units must work as a team, in a cooperative manner during this process. When a property owner challenges adoption of a resolution, the District Director is responsible for conducting a Condemnation Evaluation Meeting with the property owner to identify all issues and alternatives, and to determine if it is feasible to modify the design or schedule to effect resolution with the owner.

This meeting is to be conducted by the District Director with the assistance of the Deputy District Directors from design and right-of-way. The meeting should be limited to the functional managers, the Headquarters Project Delivery Coordinator, and the property owner. The Deputy District Directors should be familiar enough with the project details to provide a presentation to the meeting attendees. Other district staff should be available by phone or on standby to provide supplemental project details during the meeting, if necessary. Supplemental information on suggested meeting formats as well as other resources can be found on the Headquarters Division of Design intranet.

Appearance Information Sheet and Fact Sheet

If the property owner(s) does not withdraw their request for appearance upon conclusion of the Condemnation Evaluation Meeting and/or upon receipt of subsequent study results, and the district's recommendation is to proceed with the resolution of necessity, the district should notify the Headquarters Division of Design Chief, Attention: Office of CTC Highway Appearances, Highway Encroachments and Resource Conservation, Mail Station 28.

This notification will consist of a fact sheet and an appearance information sheet recommended for approval by the Deputy District Directors from design and right-of-way and approved by the District Director. A copy of the notification should also be sent to Headquarters Division of Right of Way and Land Surveys. The date selected for presentation to the CTC will be governed by the completeness of the district's initial notification and information submittal, whether or not the matter is to be evaluated by a Condemnation Panel, and the time required for the Condemnation Panel to perform its function in relation to the monthly cutoff dates for submitting agenda items (with supporting documentation) to the CTC.

Appendix JJ – Resolutions of Necessity contains templates of the fact sheet and appearance information sheet that is prepared for each appearance as well an outline of supplemental data and mapping. The fact sheet and the information included in the appearance information sheet are used to prepare the Panel Report, which is included

in the CTC briefing book should the resolution of necessity advance to the CTC for action. The actual presentation to the CTC will include a visual and verbal explanation based on this material. It is essential that the appearance information sheet be complete enough to allow the division chiefs of both Headquarters Division of Right of Way and Land Surveys and Headquarters Division of Design to decide if the request for appearance should be forwarded to a Condemnation Panel.

Action Options by Chief, Division of Design

The Chief of Headquarters Division of Design, after consulting with the Chief of Headquarters Division of Right of Way and Land Surveys, may take the following actions:

- Refer request to the Condemnation Panel to develop a recommended course of action for the Chief Engineer, or
- Refer project back to the district for additional design studies or design modifications.

Condemnation Panel Review

If the request for appearance is referred to a Condemnation Panel, the panel members will be selected from the list approved by the Chief Engineer. The Condemnation Panel shall consist of one or more Caltrans managers having career experiences in law, engineering, and right-of-way. The right-of-way panel member will act as panel chairperson and will designate a right-of-way staff person to serve as secretary to the Condemnation Panel.

The purpose of the Condemnation Panel Review Meeting is for the Condemnation Panel to conduct an independent review of the project, its impacts to the subject parcel, and to evaluate all issues brought forward.

Condemnation Panel Review Meeting Arrangements

The secretary for the Condemnation Panel will:

- Notify the panel members of their assignment and provide them with (1) the owner's written request to appear before the CTC, and (2) the district's appearance information sheet.
- Arrange through district right-of-way for a Condemnation Panel Review Meeting place and time that is convenient for the owner and all attendees. The facility should be suitable for a formal meeting. District right-of-way staff will be expected to make necessary arrangements by phone and to

confirm these, in writing, to the property owner and the panel members. An expenditure authorization should be provided by the district to capture charges to the project.

- Prior to the Condemnation Panel's review meeting with the owner, coordinate with district staff to arrange for a Condemnation Panel field review of the proposed acquisition. Representatives from district design and/or right-of-way may be requested to attend the field review to provide project details.

Stenographic Reporter

The Condemnation Panel Review Meeting is a relatively formal process that sometimes involves the preparation of a transcript by a stenographic reporter. If it is felt by the Condemnation Panel that a written transcript will be needed for a particular meeting, the Headquarters Division of Legal member of the Condemnation Panel will arrange for a stenographic reporter to attend and to prepare the transcript.

Meeting Participants

The owner and/or designated representative, the panel members, the panel secretary, the District Director, and the Deputy District Directors from design and right-of-way, will attend the Condemnation Panel Review Meeting. For locally funded projects or consultant-designed projects, the district may invite additional representatives to the Condemnation Panel Review Meeting to provide detailed information.

Caltrans representation at the meeting should be limited to only the managers listed, with potential expert presenters and other staff available on standby.

Inform Owner Prior to Meeting

Prior to the Condemnation Panel Review Meeting, the district should inform the owner of the specific details of the meeting procedures so the owner can arrange for engineering or legal assistance if desired.

Meeting Procedures

The panel secretary will begin the Condemnation Panel Review Meeting by explaining the purpose of the meeting and the procedures to be followed. District managers will describe the project using suitable maps and plan exhibits. Owners will be asked to present their concerns about the project or the proposed acquisition as presented, along with any suggestions they may have to reduce or mitigate project impacts.

Condemnation Panel Discussion

After all information has been presented and the meeting concluded, the owner and the stenographic reporter, if present, will be excused. The Condemnation Panel will then discuss the available information in an effort to develop a recommendation for the Chief Engineer. In some instances, the Condemnation Panel may need additional information from the district or other sources. They may also refer suggestions by the owner to the district for further evaluation. The Condemnation Panel may meet again upon completion of this evaluation to reach a decision.

Panel Report with Recommendation

The panel secretary will prepare a Panel Report and recommendation in coordination with the panel members. The report will include: a summary description of the project and the State's acquisition from the owner's property; a listing of the issues and recommendations raised by the owner; the Condemnation Panel's consideration of the issues and recommendations of the owner; the panel's findings; and the panel's recommendation. The report should be furnished to the panel members for review and comment prior to presenting it to the Chief Engineer for consideration.

The Chief Engineer will review the Panel Report to determine if Caltrans is ready to request the resolution of necessity from the CTC Dry Run.

Combined Meetings

The Chief Engineer has delegated the District Director the authority to combine the district Condemnation Evaluation Meeting and the Condemnation Panel Review Meeting for those projects where the property owner's issues are not related to the project's design. When this authority is exercised, the District Director shall provide in writing to the Chief Engineer, Attn: Chief Headquarters Division of Design, a notice of the decision to combine the meetings and verification that the property owners' issues are not design related.

The district will be responsible for notifying the panel secretary to coordinate the panel's participation at the combined meeting. The district will have the additional responsibility of preparing the Panel Report when a combined meeting is conducted. Coordination with the panel secretary will be necessary to complete this task.

Meeting California Transportation Commission Scheduling

If the Chief Engineer determines that Caltrans is ready to request CTC action on the resolution of necessity, the fact sheet, maps, and the Condemnation Panel's report will be furnished to the Headquarters Division of Transportation Programming, Office of CTC Liaison for inclusion in the CTC briefing book by Headquarters Division of Right of Way and Land Surveys prior to the due date for CTC book items.

Owner Notification for California Transportation Commission Meeting Appearance

The panel secretary will send a letter to the owner, notifying them of the date, time, and location to appear before the CTC. Copies of the Panel Report, Fact Sheet, maps and the Condemnation Panel Review Meeting transcript, if prepared, will be furnished to the owner with the notification. Copies of this transmittal will also be furnished to the Deputy District Directors of right-of-way and design.

District Participation

District staff is responsible for providing the necessary information to fully engage their managers and to prepare them for effective meetings with the property owners. The district will develop the presentation materials for the CTC, with assistance from the Condemnation Panel.

District and Deputy District Directors' Involvement

The Deputy District Directors for design and right-of-way are to be personally involved in the preparation and review of the appearance information sheet and any additional studies or required backup material before being sent to the Condemnation Panel. The information must be up-to-date, complete and factual.

The District Director will present Caltrans' draft presentation to the Chief Engineer at the Headquarters resolution of necessity Dry Run.

The Chief Engineer will determine at the conclusion of the district's resolution of necessity Dry Run presentation if the resolution of necessity is ready to move forward to the CTC for consideration. The district must keep in mind that Caltrans typically has only one opportunity to present Caltrans' position to the CTC.

Should the District Director be given approval to proceed, the District Director will conduct Caltrans' presentation before the CTC. If the District Director is unable to attend the CTC meeting, a Deputy District Director will conduct the presentation before the CTC.

Importance of This Process

Although this process usually occurs well after most required project approvals have been obtained, its importance cannot be minimized. Projects have been delayed or modified as a result of property owner challenges. Careful and complete documentation of the project need and design, throughout the entire project development process, is essential.

CHAPTER 29 – Landscape Architecture

Table of Contents

CHAPTER 29 – Landscape Architecture 29-7
SECTION 1 General 29-7
Introduction 29-7
Aesthetic, Environmental, Scenic, and Community Values 29-7
Traveler and Worker Safety 29-9
References 29-10
SECTION 2 Highway Planting 29-12
ARTICLE 1 Definitions, General Policy, and Programs 29-12
Definitions 29-12
General Policy 29-13
State Highway Operation and Protection Program 29-20
ARTICLE 2 Responsibilities 29-22
Headquarters 29-22
District 29-23
ARTICLE 3 Participation by Others 29-24
Highway Planting by Others 29-24
Maintenance Responsibilities – Planting by Others 29-25
Maintenance Agreements 29-26
ARTICLE 4 Project Development Process 29-28
General 29-28
Project Development Team 29-29
Comprehensive Corridor Plan 29-29
Priority Rating Sheets 29-30
Project Initiation Phase 29-30
Project Approval and Environmental Documentation Phase 29-34
Plans, Specifications, and Estimate Phase 29-36
Construction Phase 29-38
Transfer to Maintenance 29-39
SECTION 3 Safety Roadside Rest Areas 29-40
ARTICLE 1 Definitions, General Policy, and Programs 29-40
Definitions 29-40
Purpose of the Safety Roadside Rest Area System 29-40
Context Appropriateness 29-40
Use of Safety Roadside Rest Areas 29-41

Statutory Requirements 29-41
State and Federal Accessibility Requirements 29-43
State Energy and Environmental Design Requirements 29-43
Safety Roadside Rest Area Master Plan 29-44
Safety Roadside Rest Area Rehabilitation Program 29-45
New Safety Roadside Rest Areas Program 29-45
Wayside Stop Demonstration Program 29-45
ARTICLE 2 Responsibilities 29-48
Headquarters Landscape Architecture Program 29-48
Headquarters Division of Engineering Services-Structure Design, Office of Transportation Architecture 29-50
District 29-51
ARTICLE 3 Project Development Process 29-53
General 29-53
Safety Roadside Rest Area Partnership Projects 29-53
Site Requirements 29-54
Site and Architectural Analysis 29-54
Leadership in Energy and Environmental Design and California Green Building Standards Code Analysis 29-55
Stakeholder Involvement 29-55
Design Charrette Process 29-56
Project Initiation Phase 29-56
Project Approval and Environmental Documentation Phase 29-58
Plans, Specifications, and Estimate Phase 29-59
ARTICLE 4 Closure 29-59
Emergency or Intermittent Closure 29-59
Permanent Closure 29-60
Temporary Closure for Construction 29-61
ARTICLE 5 References 29-62
SECTION 4 Vista Points 29-63
ARTICLE 1 General Policy 29-63
Purpose of Vista Points 29-63
General Considerations 29-63
Preservation of Views 29-63
Americans with Disabilities Act of 1990 Compliance 29-64
Signage Requirements 29-64
Vista Point Inventory 29-64
ARTICLE 2 Project Development Process 29-65
ARTICLE 3 References 29-65
SECTION 5 Park-and-Ride Facilities 29-66
ARTICLE 1 General Policy 29-66
Purpose of the Park-and-Ride System 29-66
Use of Park-and-Ride Lots 29-66
Statutory Requirements 29-66
State and Federal Accessibility Requirements 29-67
Park-and-Ride Lease Program 29-68

ARTICLE 2 References 29-68
SECTION 6 Aesthetics 29-69
General 29-69
Aesthetic Considerations 29-69
SECTION 7 Blue Star Memorial Highways 29-71
ARTICLE 1 Purpose and General Policy 29-71
Purpose of Blue Star Memorial Highways 29-71
General Policy 29-71
ARTICLE 2 Responsibilities 29-71
Headquarters 29-71
District 29-71
Permittee 29-72
ARTICLE 3 Guidelines 29-72
Location of Markers 29-72
Maintenance 29-73
Dedication Ceremony 29-73
SECTION 8 Scenic Highways and Byways 29-74
ARTICLE 1 General Policy and Program 29-74
General 29-74
Corridor Protection Program 29-74
ARTICLE 2 Designation and Design Considerations 29-75
The Official Designation Process 29-75
Adding State Highways to the Scenic Highway System 29-76
County Roads as Part of the Scenic Highway System 29-76
Scenic Highway Identification 29-76
Scenic Highway Program Funding 29-76
Widening a Scenic Highway 29-76
Official Designation Does Not Preclude Development 29-77
Revoking a Scenic Highway Designation 29-77
Scenic Highway Designation Benefits 29-77
SECTION 9 Transportation Art 29-79
ARTICLE 1 General Procedure 29-79
Statutory Authority 29-80
Intellectual Property Rights - Copyright Ownership of Transportation Art 29-80
Artist Disclaimer Statement 29-80
Sponsor Recognition 29-80
Sponsor Recognition Disclaimer Statement 29-81
Placement 29-81
Transportation Art Requirements 29-81
ARTICLE 2 Responsibilities 29-83
Administrative Responsibilities 29-83
Financial Responsibilities 29-85
Maintenance Responsibilities 29-85
ARTICLE 3 Project Development Process 29-86
Processing Transportation Art Proposals 29-86

Preliminary Proposal Review 29-86
Community Review and Public Agency Resolution 29-88
Final Proposal Review 29-89
District Director Review 29-89
Encroachment Permit Process 29-89
After Construction 29-89
SECTION 10 Community Identification 29-90
ARTICLE 1 General Procedure 29-90
Community Identification Requirements 29-91
ARTICLE 2 Responsibilities 29-93
Administrative Responsibilities 29-93
Financial Responsibilities 29-94
Maintenance Responsibilities 29-95
ARTICLE 3 Project Development Process 29-96
Processing Community Identification Proposals 29-96
Preliminary Proposal Review 29-97
Community Review and Public Agency Resolution 29-98
Final Proposal Review 29-99
District Director Review 29-99
Encroachment Permit Process 29-100
After Construction 29-100
SECTION 11 Gateway Monuments 29-101
ARTICLE 1 General Procedure 29-101
Statutory Authority 29-102
Placement 29-102
Gateway Monument Requirements 29-102
ARTICLE 2 Responsibilities 29-104
Administrative Responsibilities 29-104
Financial Responsibilities 29-106
Maintenance Responsibilities 29-106
ARTICLE 3 Project Development Process 29-107
Processing Gateway Monument Proposals 29-107
Preliminary Proposal Review 29-108
Community Review and Public Agency Resolution 29-109
Final Proposal Review 29-110
District Director Review 29-110
Encroachment Permit Process 29-110
After Construction 29-110

Table of Figures

Figure 29-1 Determining Local Participation in Highway Planting 29-27
Figure 29-2 Responsibilities for Highway Planting Funded by Others 29-28
Figure 29-3 Water Conservation Categories and Required Actions 29-37
Figure 29-4 Transportation Art, Community Identification, and Gateway Monuments 29-79
Figure 29-5 Transportation Art, Community Identification, and Gateway Monuments 29-90
Figure 29-6 Transportation Art, Community Identification, and Gateway Monuments 29-101

CHAPTER 29 – Landscape Architecture

SECTION 1 General

Introduction

As the primary program responsible for the design of the highway roadside, the Headquarters Landscape Architecture Program (LAP) provides expertise in the planning, design, construction, maintenance, and operation of transportation system improvements that:

- balance mobility, safety, maintainability, and economic needs with adjacent land use and aesthetic, environmental, scenic, and community values.
- improve motorized and nonmotorized safety through the design of context-sensitive roadways and transit, bicycle, and pedestrian facilities.
- improve traveler and worker safety by providing design solutions that reduce the frequency and duration of maintenance worker exposure to traffic.
- improve traveler safety through the design of safety roadside rest areas and management of safety roadside rest area system needs.

Aesthetic, Environmental, Scenic, and Community Values

To make projects successful and to provide the best overall public benefit, the project development process includes evaluating and addressing impacts to aesthetic, environmental, scenic, and community values in balance with transportation goals.

The profession of landscape architecture utilizes site planning and design techniques that work in harmony with both constructed and natural environments. Landscape architects offer the project development team (PDT) a broad range of skills to identify innovative design solutions that address often competing requirements.

Aesthetic Values

Landscape architects provide expertise to protect and improve scenic views both towards and away from transportation improvements. Community and Caltrans aesthetic values may be incorporated into transportation projects by providing aesthetic reviews, visual impact assessments, comprehensive corridor plans, and aesthetic design guidance.

Environmental Values

Landscape architects provide design expertise to integrate transportation facilities with the physical, natural, and constructed environment, including habitat conservation and restoration; conservation of agricultural lands; water conservation through the use of drought tolerant plants and inert materials; the design of irrigation systems using non-potable water sources; and stormwater pollution prevention through erosion control techniques.

Landscape architects also provide design expertise in the selection and placement of planting provided to replace existing native or non-native planting removed by roadway construction activities. This work includes restoration of native landscape areas, required mitigation planting, highway planting revegetation, and replacement highway planting. These projects help mitigate the environmental impact of roadway construction projects.

Visual Quality

As part of the environmental planning process, landscape architects assess potential adverse visual impacts of transportation projects adjacent to communities or natural scenic resources. Landscape architects work with permitting agencies, local communities, and the PDT to consider avoidance mitigation measures. Landscape architects perform scenic resource evaluations and visual impact assessments, and they provide design expertise to protect and preserve scenic resources. For more information on preliminary assessments, scenic resource evaluations, and visual impact assessments, see Chapter 8 – Overview of Project Development.

Community Values

Landscape architects assist in integrating transportation needs with existing community goals and values by providing expertise in comprehensive corridor planning, urban design, historic preservation, and community involvement. They also assist in facilitating timely project delivery and building community consensus by implementing principles of community involvement and context-sensitive design, including:

- harmonizing the roadway with existing topography and land uses.
- preserving and enhancing community character.
- meeting the needs of nonmotorized travelers.
- preserving historic resources such as historic landscapes.

- supporting the incorporation of transportation art, gateway monuments, and community identification.

Traveler and Worker Safety

Landscape architects contribute to the safety of the traveling public and highway workers through roadside design techniques that minimize or eliminate worker exposure to traffic. These design techniques can be grouped into three categories: safe facility location, recurrent activity elimination, and safe maintenance access.

Safe Facility Location

These improvements enhance safety by placing or relocating facilities that require recurrent maintenance activities to protected areas or to areas outside the clear recovery zone. Typical examples include locating, relocating, or clustering facilities such as irrigation controllers, backflow preventers, remote control valves, ramp meters, changeable message sign controls, and cabinets to areas adjacent to the right-of-way fence or to protected areas. See the *Highway Design Manual (HDM)*, Topic 706, for more information.

Recurrent Activity Elimination

These improvements enhance safety by reducing or eliminating recurrent maintenance activities such as frequent pruning, graffiti removal, irrigation system repair, herbicide application, and weed control. Typical examples include the following:

- Removing plant material that encroaches upon sight distances
- Planting shrubs or vines or using textures on noise barriers
- Automating irrigation systems
- Providing vegetation control treatment beneath guardrails and signs
- Paving slopes beneath bridge structures
- Paving narrow areas
- Providing contrasting surface treatment (paving) beyond the gore area pavement
- Placing rock or other inert mulch materials
- Removing signs that are no longer required

Safe Maintenance Access

These improvements enhance safety by providing maintenance workers with safe access to roadway and roadside facilities requiring regular maintenance and include providing stairs on steep slopes, maintenance access roads, maintenance access gates, and maintenance vehicle pullouts.

References

The *Highway Design Manual* contains design standards and guidelines concerning the planting and conservation of existing vegetation, the development of highway planting projects, and the incorporation of scenic values in highway design. The manual also includes design standards and guidelines for safety roadside rest areas and vista points.

The *Storm Water Quality Handbooks: Project Planning and Design Guide* provides design guidance for selecting and designing stormwater quality best management practices (BMPs) during the planning and design phase of a project.

Chapter 27 of the *Standard Environmental Reference (SER)* provides guidelines for conducting scenic resource evaluations and for performing visual impact assessments during the project development process.

Chapter 28 of the *Standard Environmental Reference* provides guidelines for determinations of historic property eligibility and identification of historic landscapes during the project development process.

The *Encroachment Permits Manual* contains procedures and guidelines for permitting work by others, including planting design, transportation art, community identification, and gateway monuments.

The *Construction Manual* describes administration and oversight of projects.

The *Maintenance Manual* contains instructions about the maintenance of roadside vegetation and other roadside facilities.

The *Landscape Architecture PS&E Guide* provides guidelines for the preparation of highway planting and irrigation plans, specifications, and estimate (PS&E).

The *Plans Preparation Manual* and the *CADD Users Manual* provide guidelines for the preparation of highway planting and irrigation plans.

Caltrans Best Practices Public Participation Reference provides the planning process to seek out and consider the needs of all stakeholders in order to maximize the potential and benefit of public involvement and to adequately respond to and meet the requirements of State and federal legislation and mandates and Caltrans' policies and goals.

The *Main Street, California* booklet emphasizes Caltrans' commitment to and provides guidance on the safe, context-appropriate design of State highways that function as community main streets.

The Headquarters Division of Project Management *Project Communication Handbook* helps the project team identify internal and external stakeholders and improves communication among all parties.

Design Information Bulletin 82 – Pedestrian Accessibility Guidelines for Highway Projects, provides design guidance for pedestrian accessibility for highway projects.

The Federal Highway Administration's (FHWA) *Flexibility in Highway Design* provides guidance for creating transportation facilities that conserve and enhance environmental, scenic and community resources.

The FHWA Executive Memorandum issued April 26, 1994, *Environmentally and Economically Beneficial Practices on Federal Landscaped Grounds*, provides guidance on using native plant material and integrated pest management techniques to conserve water and reduce pollution.

The FHWA Executive Memorandum issued August 18, 1999, *Guidance Implementing Executive Order 13112 Invasive Species*, provides guidance on implementing *Executive Order 13112* signed by President Clinton on February 3, 1999, which strives to control the introduction and spread of invasive species and minimize their impact on economic, ecological, and human health.

SECTION 2 Highway Planting

ARTICLE 1 Definitions, General Policy, and Programs

Definitions

Establish existing planting – the period of time that allows newly installed plant material to reach a state of maturity that requires minimal additional maintenance. Establish existing planting work is accomplished via a separate contract that begins just after the completion of a planting and irrigation contract. The majority of the work performed during an establish existing planting project is identical to plant establishment; however, an establish existing planting project includes additional activities at the start of the project, including checking plants for deficiencies, checking and testing irrigation facilities, and repairing identified deficiencies.

Highway planting – the term includes new highway planting, replacement highway planting, roadside rehabilitation, highway planting revegetation, required mitigation planting, and irrigation system upgrade work. Highway planting addresses safety requirements, provides compliance with environmental commitments, and assists in the visual integration of the transportation facility within the existing environs.

Irrigation system upgrade – the conversion of a manually-operated irrigation system to an automatic or remote irrigation control system (RICS), replacement of obsolete irrigation components, conversion of a potable water irrigation system to non-potable water, and worker safety improvements.

Landscaped freeway – the planted section of freeway that meets the criteria established by the *California Outdoor Advertising Act*. This designation is used in the control and regulation of outdoor advertising displays.

Plant establishment – the period of time that allows newly installed plant material to reach a state of maturity necessary to require minimal future maintenance. FHWA regulations require a plant establishment period of sufficient length to ensure the survival of new plant material for all projects that include highway planting. The plant establishment period typically includes replacement of dead or damaged plant material; weed, rodent, and pest control; irrigation operation and repair; and other activities required to ensure the long-term survival of plant material.

General Policy

Conventional Highways

Highway planting funded and maintained by Caltrans on conventional highways is limited to planting that provides safety improvements (headlight glare screening, delineation of the roadway, fire suppression, and wind breaks), erosion control and stormwater pollution prevention, highway planting revegetation, and required mitigation planting.

Freeways, Controlled Access Highways, and Expressways

Highway planting is warranted on freeways, controlled access highways, and expressways under any of the following conditions:

- On new freeways, controlled access highways, and expressways – areas impacted by new highway construction where adjacent properties are developed at the time of highway construction contract acceptance
- On existing freeways, controlled access highways, and expressways – areas impacted by major modifications to the existing highway where adjacent properties are developed at the time of highway construction contract acceptance
- Where adjacent properties were developed on or before June 30, 1987
- To satisfy conditions from a memorandum of understanding (MOU) or memorandum of agreement (MOA) between Caltrans and another governmental agency
- To mitigate environmental impacts in compliance with environmental commitments, agreed to, for example, as a part of project development, resource agency permit requirement, or court order
- To provide planting necessary for revegetation, erosion control, stormwater pollution prevention or traffic safety improvements (headlight glare screening, delineation of roadway, fire suppression, and wind breaks)

Adjacent properties are considered “developed” when the streets or buildings are in place or when the adjacent properties have approved construction permits. Parks and open spaces are not considered developed property unless they are an integral component of a planned development.

Highway planting along freeways, controlled access highways, and expressways that exceed these provisions will only be permitted when funded and maintained by others.

Separate Contract Requirement for Highway Planting Work on Roadway Construction Projects

Highway planting with an estimated cost of $300,000 or more, in conjunction with or resulting from a roadway construction project, must be accomplished by separate contract and must include three years of plant establishment. This policy applies to all highway planting projects within the State operational right-of-way regardless of the funding source. The estimated cost of highway planting is the total sum of the bid items for planting and irrigation work and does not include the cost of traveler and worker safety features, or storm water pollution prevention plan (SWPPP) items.

Highway planting with an estimated cost of less than $300,000, in conjunction with or resulting from a roadway construction project, may remain with the parent roadway construction project and must include one year of plant establishment. Exceptions to this policy must receive concurrence from both district maintenance and the district landscape architect (LA) and be approved by the Headquarters Landscape Architecture Program.

The cost limit that triggers the separate contract requirement for highway planting work may be adjusted by the Headquarters Landscape Architecture Program.

Exceptions to the separate contract requirement policy may be granted by the Headquarters Division of Design-Landscape Architecture Program Deputy Division Chief when there is a demonstrated benefit to the State to combine planting with road construction under a single contract or when the planting work is legally required to be installed with the roadway construction contract. Exception requests must be approved by the Headquarters Landscape Architecture Program prior to approval of the project report (PR).

Maximum Costs for Planting and Water Assessment

Maximum costs have been established by the Headquarters Landscape Architecture Program for the cost per acre of new planting and for water assessment fees. These maximum costs apply whenever new planting or new water service are included on a project, regardless of funding source. The maximum costs for planting and water assessment fees may be adjusted by the Headquarters Landscape Architecture Program. The current maximum values established for planting and water assessment fees are located at: http://www.dot.ca.gov/hq/LandArch/16_la_design/guidance/

Exceptions to this policy must be approved by Headquarters Division of Design-Landscape Architecture Program Deputy Division Chief and may be considered where the highway planting work is funded and maintained by others; where a higher level of highway planting is required due to legal agreements or to replace planting originally provided by others.

Maximum Cost per Acre for Planting

The maximum cost per acre for planting excludes the costs for traveler and worker safety, stormwater pollution prevention, mitigation planting, erosion control, and the water assessment fee.

Maximum Water Assessment Fee Limit

The water assessment fee should not exceed the limit calculated by multiplying the maximum cost per acre by the number of irrigated acres. If the one-time, up front water assessment and/or water meter hookup fee exceeds the limit, a project of five or more acres will only be considered if the additional cost is paid by others. For projects affecting less than five acres, the assessment fee should be negotiated toward receiving the lowest fee possible.

Non-potable Water Irrigation Goal

One of Caltrans' goals is to minimize the use of potable water and maximize the use of non-potable water when needed for irrigated landscapes. Non-potable water includes untreated sources (wells, streams, rivers, underground water) as well as recycled water. Non-potable water suitable for irrigation should be used when available and cost effective. Use of non-potable water is cost effective when there is a demonstrated cost savings over a 20-year life cycle. Cost sharing or other methods should be evaluated to bring recycled water to the highway right-of-way in a cost effective manner.

Planting with Noise Barriers

Planting should be incorporated as an integral component of noise barrier work to discourage graffiti, address visual impact issues, and reduce future maintenance worker exposure. Where graffiti removal requires, or is expected to require recurrent maintenance activities, consideration must be given to covering new or existing noise barriers with vines and/or placing plants to screen the noise barriers to reduce graffiti.

To avoid excessive maintenance a variety of plant species whose growth habits minimize the potential for growth onto private property should be selected.

Noise barrier design and placement should provide safe maintenance access to plant materials.

Plant Establishment

Plant establishment periods for highway planting performed in conjunction with a roadway construction project must follow the policy described in this section under the heading "Separate Contract Requirement for Highway Planting Work on Roadway Construction Projects."

Plant establishment periods for highway planting performed under a separate contract from a roadway construction project must be three years in length.

Plant establishment periods for required mitigation planting may exceed three years when required by a regulatory agency.

Exceptions to this policy must receive concurrence from both district maintenance and the district landscape architect and approval from the Headquarters Landscape Architecture Program.

Establish Existing Planting

An establish existing planting project must be scoped and programmed as soon as it is determined that the standard three year duration of plant establishment work is insufficient to establish the plants in the initial highway planting contract. To minimize lapses in performance of plant establishment work that would occur between contracts, an establish existing planting project needs to be delivered and advertised so that the contract starts immediately after completion of the plant establishment period from the initial contract. Funding for establish existing planting contracts should be split from the parent project or funded by others.

Replacement Highway Planting

Replacement highway planting replaces vegetation installed by Caltrans or others that has been damaged or removed due to transportation project construction. Replacement highway planting may also include irrigation modifications and/or replacement. Caltrans will replace vegetation (including planting by others) damaged

or removed by State transportation construction activity. Vegetation will be replaced at a rate and size determined by the district landscape architect.

If a highway construction project-funded-by-others is proposed for an area in which the operational right-of-way is currently planted, the project proponent must provide replacement planting equal to or greater than the current allowable maximum cost per acre. See the "Maintenance Responsibilities – Planting by Others" Sub-article regarding maintenance responsibilities for planting that exceeds the maximum cost per acre.

If there is limited space for replacement planting due to transportation construction, replacement planting may be installed outside the limits of the parent highway project. Replacement planting may be located outside the State operational right-of-way if it is in a public space within the adjacent community and is maintained by others. The district landscape architect and the appropriate public agency should negotiate and agree on the location of this planting and the terms of the maintenance agreement.

Replacement highway planting required due to the impacts of a roadway construction project must be programmed in conjunction with and funded from the parent project. The cost of highway planting work should be identified in the project initiation document (PID) for the parent project. The Project Approval and Environmental Document (PA&ED) phase of work for the parent project should include the planting project within its project scope. Replacement highway planting must be under construction within two years of acceptance of the highway contract that damaged or removed the existing planting. For specific information regarding project programming, refer to Chapter 9 – Project Initiation.

Required Mitigation Planting

Required mitigation planting provides planting and other work necessary to mitigate environmental impacts due to roadway construction. The word "required" indicates that the work is necessary to meet legal and regulatory requirements.

Work involved in mitigation planting may include the following:

- Creation, restoration, or enhancement of a habitat such as wetlands or oak woodlands

- Creation, restoration, or enhancement of a specific habitat for sensitive species (such as elderberry plantings for the valley elderberry longhorn beetle or nesting habitat for the Least Bell's Vireo)

Required mitigation planting may be performed within the operational right-of-way, immediately adjacent to the highway, or at an offsite location as determined by the permit.

A planting project for required mitigation due to the impacts of a roadway construction project must be programmed and funded as part of the parent project. The cost of required mitigation planting should be identified in the PID for the parent project. This planting must be under construction within two years of acceptance of the highway contract that damaged or removed the existing planting, unless otherwise specified. For specific information regarding project programming, refer to Chapter 9 – Project Initiation.

Mitigation Monitoring

Monitoring of mitigation planting may be required as described in the regulatory and/or public agency's permit or the environmental document.

A separate mitigation monitoring contract must be programmed and funded as part of the parent project. The cost of required mitigation planting should be identified in the PID for the parent project. The PA&ED phase of work for the parent project should include the mitigation monitoring within its project scope. The mitigation monitoring project needs to be delivered and advertised so that the contract starts immediately after completion of the mitigation planting contract. For specific information regarding project programming, refer to Chapter 9 – Project Initiation.

Highway Planting Revegetation

Highway planting revegetation provides replacement planting for native vegetation that was damaged or removed due to a roadway construction project. Highway planting revegetation may include irrigation systems as appropriate.

When highway planting revegetation is required due to the impacts of a roadway construction project, it must be programmed and funded as part of the parent project. The cost of the work should be identified in the PID for the parent project. This planting must be programmed to be under construction within two years after acceptance of the highway contract. A follow-up establish existing planting contract

may be required to ensure the success of the highway planting revegetation project. For specific information regarding project programming, refer to Chapter 9 – Project Initiation.

Wildflower Planting

California native wildflowers must enhance roadside assets and provide food and shelter for pollinators. Wildflower planting must be included with all projects that have federal participation and include planting work, per *Title 23 Code of Federal Regulations*, Section 752.11. Highway planting to provide traffic safety improvements (see the "Conventional Highways" heading in this section), revegetation, erosion control, and irrigation-only projects are exempt from this requirement.

The minimum required percentage cost for native wildflowers is one-quarter of one percent of the total funds expended for planting and irrigation work.

Project reports must include a discussion of the proposed use of wildflowers and compliance with federal wildflower requirements. See Appendix D – Preparation Guidelines for Project Report (New Highway Planting or Roadside Rehabilitation) for more information.

The use of native wildflowers may not be appropriate under conditions such as the following:

- Where native, non-endemic wildflowers are considered invasive to natural areas or competitive with endemic native species
- Where native wildflowers would produce excessive dormant season fire fuel that increases the threat of wildfires and/or fire safety management will damage the wildflower resource itself
- Where wildflowers would not be compatible with the adjacent urban landscape environs
- In areas where human impact, such as trampling, would preclude successful establishment of native wildflowers
- Where irrigation necessary to sustain adjacent planting would lead to the decline of native wildflowers

The PR must describe the specific reasons why the use of native wildflowers is not appropriate with the project. In these situations, an estimate of the dollar value of the required wildflower element for the project must be included in the PR. These funds are to be tracked by the district for use in developing future native landscape

restoration projects that include wildflowers for compliance with the federal wildflower obligation. Funding for these native landscape restoration projects shall come from the district's State Highway Operation and Protection Program (SHOPP) minor allocation.

State Highway Operation and Protection Program

Roadside Rehabilitation

Roadside rehabilitation provides for water conservation improvements by utilizing recycled water and efficient irrigation technology, replacement and rehabilitation of existing vegetation damaged by weather, acts of nature, or deterioration in order to integrate the facility with the adjacent community and surrounding environs. Roadside rehabilitation also provides erosion control to comply with National Pollutant Discharge Elimination System (NPDES) permit requirements. These projects include strategies that improve traveler and worker safety by reducing the frequency and duration of maintenance worker exposure to traffic.

New Highway Planting

New highway planting provides planting to satisfy legal mandates, environmental mitigation requirements, memoranda of understanding or agreement between Caltrans and public agencies, and for aesthetics and erosion control. New highway planting also includes strategies that improve traveler and worker safety by reducing the frequency and duration of maintenance worker exposure to traffic.

When new highway planting is required due to the impacts of a roadway construction project, it must be programmed and funded as part of the parent roadway project. The cost of the work should be identified in the PID for the parent project. This planting must be programmed to be under construction within two years after highway construction contract acceptance. For specific information regarding project programming, refer to Chapter 9 – Project Initiation.

New highway planting funded from a district's minor program will only be allowed when approved by the District Director and when adequate resources are committed for maintenance of the new planting and irrigation.

Roadside Safety Improvements

Roadside safety improvements provide solutions to worker safety issues and reduce the frequency and duration of worker exposure to traffic through eliminating the need for workers on foot adjacent to the travel way, increasing access from locations off of the travel way, accommodating mechanized maintenance activities, and relocating equipment away from traffic. The risk of injury or fatality increases with the length of time an employee is exposed to traffic without protection. The majority of employee fatalities involve workers on foot. Common factors in these fatalities include urban location, high average daily traffic (ADT), roadside work near the shoulder, vehicles parked on the shoulder, and employees on foot.

Roadside Protection and Restoration and Advanced Mitigation

Roadside protection and restoration serves to enhance, preserve, or restore scenic and native landscape areas within or near roadsides, reduce life-cycle costs, and improve worker safety. Examples of roadside protection and restoration, and advanced mitigation work include the following:

- Placement of historic markers
- Elimination of qualified junkyards
- Removal of nonconforming outdoor advertising signs
- Construction of vista points and roadside ecological viewing areas
- Scenic enhancements
- Relinquishment of environmental mitigation sites
- Experimental or new features
- Work required to comply with the *Surface Mining and Reclamation Act of 1975*
- Buying credits in bulk from existing banks or in-lieu fee programs
- Securing environmental resources for advance mitigation that are in high demand but short supply
- Partnering with other agencies or non-profit organizations to fund restoration projects, in part or in whole
- Creation of new privately owned and operated, but Caltrans-dedicated, mitigation banks or conservation banks
- Acquiring conservation easements and land in fee simple
- Creation of new Caltrans-owned and operated mitigation banks or conservation banks
- Improving fish and wildlife protection on the State highway system, including fish passage remediation or improving habitat connectivity

ARTICLE 2 Responsibilities

Headquarters

Landscape Architecture Program

The Headquarters Division of Design-Landscape Architecture Program Deputy Division Chief:

- establishes statewide roadside SHOPP levels and performance goals.
- designates “landscaped freeway” segments.
- directs the development, implementation, and evaluation of sustainable roadsides, traveler and worker safety, and context-sensitive design strategies.
- directs policy development, performance reviews, and evaluates district compliance with policy and guidance.
- directs research for new materials and methods.
- reviews and approves design and policy exception requests.
- directs policy for compliance with National Pollutant Discharge Elimination System for erosion control and final soil stabilization.

Office of Landscape Architecture Support and Planning

The Chief of the Office of Landscape Architecture Support and Planning:

- provides advisory support to the Headquarters Division of Design-Landscape Architecture Program Deputy Division Chief for SHOPP coordination.
- provides expert advice to the districts for program and project delivery activities.
- recommends approval of policies, procedures, plans, and standards.

District coordinators for the Office of Landscape Architecture Support and Planning:

- assist districts with issues pertaining to policy and procedures involved in the preparation of PIDs, design concepts, PRs, design intent statements (DISs), fact sheets, and PS&Es for projects that improve compatibility, including highway planting, safety roadside rest areas, vista points, and other site development.
- assist the Headquarters Division of Design-Landscape Architecture Program Deputy Division Chief in development of SHOPP, State Transportation Improvement Program (STIP) and other programming documents relating to project development.
- review and assist district compliance with objectives, policies, guidelines, and standards.

- disseminate and interpret program and project development guidelines, policies, standards, and planting and irrigation system design concepts for compatibility improvements.
- review and make recommendations for exception requests to Caltrans' standards for landscape architecture work.
- recommend and maintain policies, guidelines, procedures, and standards for safety roadside rest area and vista point design.
- assist districts and other programs with safety roadside rest area, joint economic development, and privatization efforts.
- coordinate safety roadside rest area policies, standards, and ten-year SHOPP needs.
- oversee the development and update of the statewide *Safety Roadside Rest Area Master Plan*.

Office of Landscape Architecture Standards and Procedures

The Chief of the Office of Landscape Architecture Standards and Procedures:

- develops and maintains landscape architectural guidance and procedures.
- coordinates improvement of roadside design standards among Headquarters functional units, communicates improvements to the districts.
- monitors activities, objectives, and strategies for worker safety issues by Caltrans and other agencies, organizations, and manufacturers.
- initiates and oversees research and consultant studies.
- develops and maintains standards for highway planting and erosion control.

District

District Director

The District Director:

- ensures policy compliance with roadside programs and the compatibility of transportation facility improvements.
- delivers programmed projects on time and within budget.

District Landscape Architect

The district landscape architect:

- identifies highway planting needs by developing and maintaining a current list of potential projects that qualify as new highway planting, or roadside rehabilitation.

- reviews the preliminary environmental analysis report (PEAR) and final environmental document to ensure conservation of resources that contribute to the character of a project location, including existing trees, historic plantings, rock outcroppings, and environmentally sensitive areas.
- identifies district needs for accommodating worker safety on the State Highway System (SHS).
- prepares PID, PA&ED, and PS&E for highway planting work.
- prepares erosion control plans and special provisions for roadway improvement projects.
- reviews and approves slopes steeper than 4:1 (H:V). The district landscape architect's signature on the storm water data report at the conclusion of PID, PA&ED and PS&E affirms their review and approval.
- as a PDT member, assists with transportation improvements developed by Caltrans or others that are integrated with the surrounding environs and social context. The district landscape architect coordinates stakeholder identification and collaboration and provides recommendations for aesthetics, comprehensive corridor plans, context-sensitive-solutions, roadside management issues, stormwater pollution prevention, and visual impact assessments.
- for projects with highway planting developed by others, sends a copy of the planting plans and specifications to Headquarters Landscape Architecture Program, Office of Landscape Support and Planning, for "landscaped freeway" determination.

ARTICLE 3 Participation by Others

Highway Planting by Others

Highway planting within the State right-of-way, including installation, plant establishment, and maintenance, may be provided by others. Responsibility for installation, plant establishment, and maintenance for these projects is shown in Figure 29-1 and Figure 29-2.

Participation by others is normally accomplished through a cooperative agreement between Caltrans and the public agency.

The public agency should strive to implement a context-sensitive project development process that considers early and continuous stakeholder input.

If requested by the public agency, Caltrans may perform (on a reimbursed basis) the services for which the public agency is responsible if Caltrans has sufficient reimbursed budget authority. If Caltrans performs project construction support, the

project sponsor will reimburse Caltrans for its capital outlay support costs in the same proportion as the project sponsor's share of the total project capital cost unless other equitable arrangements are specified in the cooperative agreement.

An encroachment permit is required whenever the project sponsor, its consultants, or its contractors work within the State highway right-of-way. In the case of easements, additional permits may also be required from the entity that granted the highway easement. Refer to the *Encroachment Permits Manual* for specific information.

Plans and specifications for highway planting projects provided by others within the State right-of-way are sent to the Headquarters Landscape Architecture Program-Office of Landscape Support and Planning for "landscaped freeway" determination in accordance with the *California Outdoor Advertising Act* relative to the regulation of outdoor advertising displays.

Maintenance Responsibilities – Planting by Others

General

Maintenance of highway planting outside the highway operational right-of-way (except for required mitigation planting) is the responsibility of others at no additional cost to the State.

Freeways, Controlled Access Highways, and Expressways

Maintenance of warranted highway planting and required mitigation planting on freeways, controlled access highways, and expressways (within the maximum cost per acre) is the responsibility of Caltrans.

Maintenance of unwarranted planting on freeways, controlled access highways, and expressways is the responsibility of others at no additional cost to the State.

Maintenance of warranted highway planting (except for required mitigation planting) on freeways, controlled access highways, and expressways that exceeds the maximum cost per acre is the responsibility of others at no additional cost to the State. Exceptions to this policy may be granted if the additional cost per acre is due to factors that do not increase the maintenance effort required, such as areas of rock blanket or larger plant material. Exceptions must be concurred with by the Deputy District Director (DDD) of Maintenance and approved by the Headquarters Landscape Architecture Program.

Maintenance Agreements

Only one entity should be responsible for performing maintenance at a particular location. When Caltrans and another entity share maintenance responsibilities in the same area, a maintenance agreement should be negotiated that requires no greater expenditure of Caltrans' funds and person-years than Caltrans would typically expend for that area. Maintenance agreements are implemented through the encroachment permit process.

When negotiating maintenance agreements between Caltrans and public agencies, maintenance performed by others (including licensed landscape contractors and special programs groups) should be considered. To provide uniform application of policy, agreements for maintenance performed by others must be approved by district maintenance and the public agency.

When planting is funded by others, and the most efficient and economical maintenance option is to use Caltrans' resources, the additional maintenance cost must be paid for by the other entity. This funding arrangement must be specified in a formalized agreement.

Where public agencies are prohibited by statute from participating in maintenance work, Caltrans and the public agency will negotiate a maintenance agreement.

Caltrans may require the permittee to obtain water, electrical, or other utility sources.

Performance bonds may be required to ensure that any installation, establishment, maintenance, and necessary rehabilitation done by others will be constructed to Caltrans' standards.

Figure 29-1 Determining Local Participation in Highway Planting

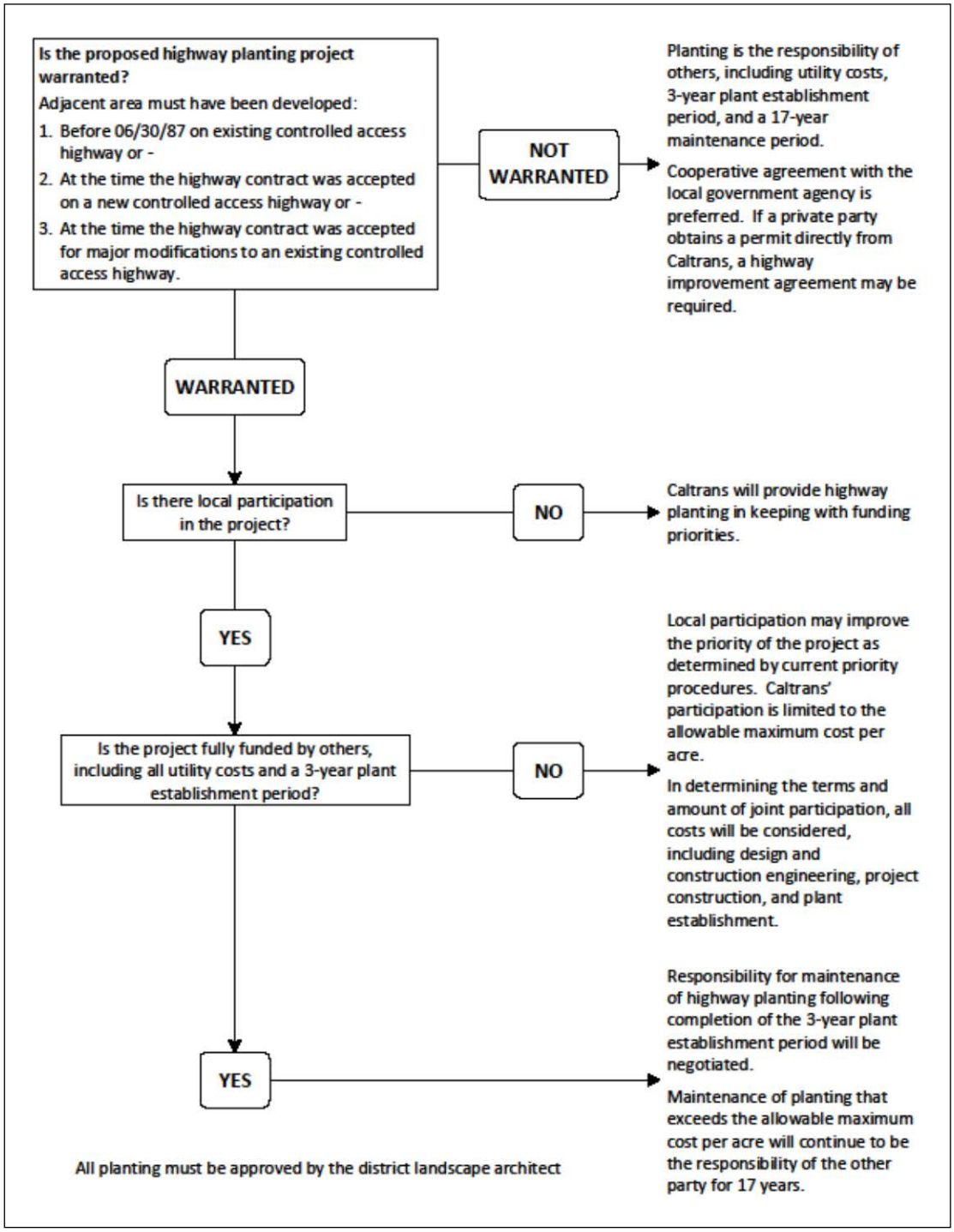

Figure 29-2 Responsibilities for Highway Planting Funded by Others

	INSTALLATION (Including 3-year plant establishment)	MAINTENANCE (17 years or perpetuity)
FUNDED JOINTLY		
New Highway Planting (warranted, not exceeding maximum cost per acre)	N	CT
Replacement Highway Planting	N	CT
Required Mitigation Planting	N	CT
Highway Planting that exceeds the maximum cost per acre	O	O
Unwarranted Planting	O	O
FUNDED 100% BY OTHERS		
New Highway Planting (not exceeding maximum cost per acre)	O	N
Replacement Highway Planting	O	CT
Required Mitigation Planting	O	N
Highway Planting that exceeds the maximum cost per acre	O	O
Unwarranted Planting	O	O

CT – Caltrans
O – Others
N – Negotiated

ARTICLE 4 Project Development Process

General

This article describes the project development process for highway planting projects. Refer to Section 3 “Safety Roadside Rest Areas” for information regarding the project development process for safety roadside rest areas.

The project development process is defined as those activities that commence with the project initiation phase and end at the assembly of the final project records following project construction. Project development for all roadside facility work

should be consistent with this chapter, as well as Part 2 – The Project Development Process (Chapters 8 through 15).

The design of all roadside facilities should incorporate context-sensitive-solutions techniques using a collaborative, interdisciplinary approach involving stakeholders early and continuously. The goal is to achieve transportation improvements that integrate and balance aesthetic, environmental, scenic, and community values with transportation safety, maintenance, and performance goals. See Chapter 22 – Community Involvement for specific information regarding community involvement.

The project development process for the design of roadside facilities should incorporate value analysis techniques that improve the quality and reduce the cost of these transportation improvements. Refer to Chapter 19 – Value Analysis for specific information regarding the value analysis process.

Project Development Team

Appropriate Caltrans' functional units, especially maintenance (landscape specialists) personnel familiar with the project site, construction, the local community, and other external stakeholders should be contacted and invited to participate in the PDT.

Refer to Chapter 8 – Overview of Project Development, for specific information on the PDT.

Comprehensive Corridor Plan

Where highway planting and other roadside improvements are proposed for a highway through a city or other jurisdictional limit, the district landscape architect will provide a copy of the comprehensive corridor plan, if available, to the local community, public agencies, and other affected stakeholders. The comprehensive corridor plan may be prepared by a consultant or other entity in cooperation with the community, public agencies, external stakeholders, and Caltrans' functional units, and is compiled and finalized by the district landscape architect. The plan may consist of drawings, charts, maps, images, and narrative necessary to guide future roadside enhancement and roadway aesthetic features, including general concepts sufficient to determine types and levels of highway planting and maintenance responsibilities.

The comprehensive corridor plan should be reviewed and updated periodically to address current issues with internal Caltrans' functional units, the local community, public agencies, and other affected external stakeholders.

Priority Rating Sheets

Priority rating sheets are required to be submitted with the PSR data sheet for all highway planting projects. Refer to Appendix E – Preparation Guidelines for Project Study Report Data Sheet (New Highway Planting and Highway Planting Restoration) for guidance on the process for priority rating determination and completion of priority rating sheets.

Project Initiation Phase

General

A PID is required for the programming of all candidate Major projects into the STIP or the SHOPP. A project study report (PSR) data sheet satisfies this requirement for both roadside rehabilitation and new highway planting projects. A project scope summary report (PSSR) or small capital value project PID is required for roadside safety improvement projects. Minor A and Minor B projects do not require a PID.

A PSR data sheet serves to identify the purpose-and-need for a project, including deficiencies in highway planting, traveler and worker safety, aesthetics, erosion control, stormwater pollution prevention, traffic management requirements, and plant establishment needs. The purpose-and-need should be identified in the PSR data sheet in sufficient detail to provide for development of a detailed preliminary design plan and design concept during the PR phase of work.

Data collection performed during the PID phase should include field reviews; study of as-built plans; input from community, public agency, and other external stakeholders; and an assessment of district maintenance and other appropriate Caltrans' functional unit needs. Identification of critical project elements early in the project initiation process allows development of an accurate work plan. An accurate work plan provides a sound basis for evaluating and monitoring project cost, scope, schedule, and ensuring timely project delivery.

The Headquarters Landscape Architecture Program district coordinator will review the unsigned PSR data sheet to ensure conformance with Caltrans' policies and program goals.

See Appendix E – Preparation Guidelines for Project Study Report Data Sheet (New Highway Planting and Highway Planting Restoration) for the PSR data sheet format for roadside rehabilitation and new highway planting projects.

See Appendix L – Preparation Guidelines for Project Study Report for the PID format for roadside safety improvement projects.

See Appendix R – Small Capital Value Projects Project Initiation Document for the PID format for small capital value projects.

Cost Considerations

For Caltrans funding limits for planting work and water assessment fees, see the heading "Maximum Planting and Water Assessment Costs" in this section.

Design Concept

PSRs developed for highway planting and roadside rehabilitation projects must include a written design concept as an attachment to the PSR data sheet, and may include a conceptual design plan. The design concept must be compatible with the Comprehensive Corridor Plan, if available. The purpose of the design concept is to identify project purpose-and-need, together with methods to address these needs, and to ensure that Caltrans' objectives are achieved, including enhancing aesthetics, maintaining environmental, scenic, and community values, and enhancing traveler and worker safety.

The following should be considered during development of a design concept for highway planting and roadside rehabilitation projects:

- Highway planting concepts such as effects and extent of roadside clearing, weed control, soil preparation, plant establishment, maintenance and operational strategies, and water conservation strategies
- Coordination with external stakeholders, including community representatives and public agencies
- Land use information, including railroad, adjacent land use, zoning, and the location of adjacent commercial businesses and advertising displays
- Roadside development information, including:
  - Right-of-way limits
  - As-built plans
  - Locations of paved ditches and drainage basins, and other areas that are not vegetated

  - Prior environmental commitments
  - Planned highway construction
  - Environmentally sensitive areas
- Locations of subsurface and overhead utilities
- Soil conditions, including soil structure and fertility, presence of groundwater, and the presence of hazardous material such as aerially deposited lead
- Climatic conditions
- Aesthetic deficiencies, as well as existing defining aesthetic features of the corridor
- Stormwater pollution prevention, including stormwater best management practices and water quality treatment techniques
- Water assessment fees and cost of water to be used during the length of the contract
- Irrigation techniques for water conservation including, but not limited to, temporary irrigation systems, recycled water transmission lines, recycled or non-potable water use, updating of irrigation systems with smart controllers, remote irrigation control systems, temporary irrigation systems, and reducing or ending irrigation at the completion of plant establishment
- Planting for water conservation including the use of native and non-native drought tolerant plant material, and inert (gravel) mulch
- Traffic management issues, including the potential required staged construction, traffic control, requirements for nighttime construction, and the need for lane and shoulder closures
- Traveler and worker safety improvements, including:
  - Relocating irrigation components such as controllers, backflow preventers, mainline pipe, remote control valves, lateral pipe, and sprinklers, or other roadside facilities such as ramp meters, control boxes and pull boxes to protected areas or adjacent to the right-of-way fence
  - Removal or replacement of deteriorating trees or other plant material and removal of plant material that encroaches upon required sight distances or blocks visibility to signage
  - Planting of vines and shrubs, or the use of textures on noise barriers and retaining walls to deter graffiti
  - Automation and modernization of irrigation systems
  - Providing maintenance access roads, access gates, and maintenance vehicle pullouts for workers on foot or in vehicles
  - Placing organic (woody) or inert (gravel) mulch, or installing rock blanket areas
  - Providing vegetation control treatment beneath guardrails and signs
  - Paving narrow areas
  - Paving slopes beneath bridge structures

- Providing contrasting surface treatment beyond the gore pavement
- Updating or removal of aging highway facilities. This work may include the following:
  - Replacing guardrail with a concrete barrier
  - Removing signs that are redundant
  - Replacing signs that are not standard
  - Removing or relocating pull boxes located in the shoulder or near the pavement edge

Upon completion of a draft design concept for highway planting and roadside rehabilitation projects, the PDT leader must request a review by the team, including the maintenance representative. The PDT leader may also need to arrange a meeting where other members of the PDT can discuss details of the design concept, including needs, deficiencies, priorities, and costs. The project landscape architect should update the design concept to incorporate feedback from this meeting in preparation for review by the Headquarters Landscape Architecture Program district coordinator who will verify conformance with Caltrans' policies, guidelines, and standards.

Design Exceptions

If exceptions to design standards are needed, approval must be obtained according to the procedures in Chapter 21 – Exceptions to Design Standards.

Approval of exceptions to mandatory design standards must be sought as early as possible in the project development process, especially where the project concept or project cost estimate depend on the proposed design exceptions. As soon as nonstandard design features are identified, the Headquarters Project Delivery Coordinator should be contacted to discuss the proposed nonstandard features.

District coordinators for the Headquarters Office of Landscape Architecture Support and Planning should be notified of project impacts.

Design Intent Statement

PSRs developed for highway planting projects should include a design intent statement. The design intent statement is developed from the design concept. It explains the purpose for the planting and irrigation work, as well as maintenance requirements for use by construction and maintenance personnel. By referring to this statement, future construction and maintenance staff can make decisions consistent with the original design concept.

A design intent statement should be prepared for all projects that include highway planting, including planting performed by permit. See Appendix EE – Highway Planting "One Liner" and Design Intent Statement (DIS) for the design intent statement format.

Project Approval and Environmental Documentation Phase

The PR refines the project purpose and scope described in the PSR and design concept. Planting work included with transportation improvement projects must be addressed in the PR for the parent project. Projects with planting, regardless of funding source or approval authority, are to conform to the responsibilities shown in Figures 29-1 and 29-2. Master PRs to cover several contiguous programmed projects on a single route may be acceptable when approved by the Headquarters Landscape Architecture Program. See Chapter 8 – Overview of Project Development and Appendix K – Preparation Guidelines for Project Report for specific information on PRs for roadway projects.

Planting Areas

The limits of planting do not necessarily need to coincide with the limits of adjacent developed properties. Such planting may be done to achieve corridor continuity with adjacent planting, to retain "landscaped freeway" classification, or to accommodate conditions such as the view from the road, the terrain, road alignment, traffic control signs, drainage or as part of a greenhouse gas reduction strategy.

Preliminary Design Plan

The PR should include a preliminary design plan that graphically communicates the design intent as an attachment. This plan is useful in generating more accurate project cost estimates at the PA&ED phase and for evaluation of future maintenance need by the maintenance unit. The PDT must be provided the opportunity to review the preliminary design plan, providing input early in the development of the project.

Design Concept

The design concept should be updated during the PA&ED phase.

Design Intent Statement

The design intent statement should be updated during the PA&ED phase.

Environmental Compliance

The PR should document key environmental issues, findings, assumptions, and commitments made to stakeholders during the PA&ED phase of work to ensure these key concepts are incorporated in the built project.

New highway planting, roadside rehabilitation, and safety improvement projects do not typically require preparation of an environmental document, and are frequently classified as a categorical exemption (CE) under the California Environmental Quality Act (CEQA) and a categorical exclusion (CE) under the National Environmental Policy Act (NEPA). The landscape architect should consult the district environmental unit to determine which environmental document, if any, is required for the project.

Projects not classified as a categorical exemption/categorical exclusion must include preparation of an environmental document to complete the PA&ED phase of project delivery. The environmental document must be attached to the PR.

The *Standard Environmental Reference* Volume 1, Chapter 30 describes the criteria that a proposed project must meet to be considered categorically excluded under NEPA as well as the preparation and processing of the categorical exclusion documentation.

The *Standard Environmental Reference* Volume 1, Chapters 34, 35, and 36 describe the preparation and processing of CEQA-only categorical exemptions, initial studies, negative declarations, and environmental impact reports.

Approval Process

The District Director is authorized to approve the PR.

Approval of the PR and completion of PA&ED signifies authority to prepare the PS&E and authority to finalize negotiations on the cooperative agreement. A copy of the approved PR should be transmitted to the Headquarters Landscape Architecture Program.

Following approval of the PR, changes to the scope of work should be avoided. Scope changes may affect other design decisions. Even minor scope changes may require additional field review or coordination with resource agency staff. Accordingly, significant scope changes that occur following PR approval should be

presented to the PDT for concurrence, and preparation of a supplemental PR may be required.

Plans, Specifications, and Estimate Phase

Preliminary Design Preparation and Review

Following PR approval, the project landscape architect should prepare the preliminary design, including detailed plans, construction details, special provisions, a project cost estimate, a plant list, and a water management plan. Planting and irrigation design should be sufficiently developed, and the plans should be complete and accurate enough to allow a detailed analysis of how well the deficiencies and justifications described in the PR have been addressed (including design for traveler and worker safety features).

Upon 60 percent completion of the preliminary design a review by the district landscape architect should be requested. The district landscape architect must ensure the project complies with Caltrans' policies and standards discussed in the *Highway Design Manual*, Chapter 900 – Landscape Architecture.

The project landscape architect should request information required to complete the PS&E from the various function units. As functional portions of the project are incorporated into the PS&E package, it should be reviewed for consistency and conformity with the entire submittal.

Design Intent Statement

During development of the PS&E, the district landscape architect should verify that the design intent statement is current and consistent with the PS&E and should verify that copies of the design intent statement are forwarded to district construction, district maintenance, and other pertinent stakeholders.

Plans, Specifications, and Estimate Submittal and Construction Contract Submittal for Advertisement

PS&E submittal to the Headquarters Division of Engineering Services-Office Engineer should follow the procedures listed in the *Ready to List and Construction Contract Award Guide (RTL Guide)*.

Construction Contract Submittal for Advertisement – Water Conservation Requirements for Planting Work

Based on the recurring drought in California, and in anticipation of future water shortages, Caltrans has established the following standard water conservation practices that apply to all projects at all times:

1. Comply with the water conservation practices required by *Deputy Directive DD-13 – Water Conservation* and the Model Water Efficiency Landscape Ordinance, even when there are no restrictions on water use.
2. Limit planting to native and non-native plant material appropriate for the project microclimate so that no additional water beyond natural rainfall is required for healthy plant survival after the plant establishment period.
3. Limit supplemental water provided by irrigation to non-potable, unless not practical.

In times of drought, additional water conservation actions will be required. Caltrans has established the following water conservation levels to categorize the actions triggered by the severity of the water shortage.

Figure 29-3 Water Conservation Categories and Required Actions

Conservation Category	**Condition That Triggers Category**	**Actions Required by District Office Engineer or Designer**
Voluntary Conservation	At least one of the following actions occur: 1. Local water agency requires water conservation 2. State requires voluntary conservation statewide.	Consider delaying the planting work in projects until the voluntary conservation requirements are lifted. Consider using nonpotable water truck watering sources. Submit written documentation of water availability with the submittal of the contract for advertisement.
Mandatory Conservation	At least one of the following actions occur: 1. Local water agency requires mandatory conservation 2. State requires mandatory conservation statewide.	Do not advertise or award projects that include non-essential planting work irrigated with potable water.
Severe Drinking Water Emergency	State Water Resources Control Board-Division of Drinking Water declares a local drinking water emergency due to an acute drinking water shortage.	Do not advertise or award projects that include any planting work irrigated with potable water.

Construction Phase

The project landscape architect should include the design intent statement, quantity calculations and project documents in the resident engineer (RE) file for distribution to construction.

The district landscape architect, project landscape architect, or functional units should be prepared to support and answer any technical questions from the district construction unit throughout the construction phase of work. Questions received directly from contractors, suppliers, or others outside of Caltrans should be directed to construction for response.

Prior to issuing contract change orders (CCOs) for any project that would affect highway planting or traveler and worker safety features, the construction resident engineer should consult with the district landscape architect or project landscape architect. The landscape architect should review the proposed contract change order with regard to its impact upon roadside facilities, stormwater pollution prevention, erosion control, and other issues and provide the construction resident engineer with immediate support.

In an effort to continue to improve the quality and maintainability of highway planting projects, the project manager should schedule three field reviews as appropriate during construction. Reviews should include the resident engineer, project landscape architect, landscape specialist and either the maintenance manager or the maintenance area superintendent. Reviews should occur during the layout of the irrigation system, upon completion of planting, and at the final “walk through” during plant establishment.

Field review meetings should focus on completion of contract document requirements and details that affect the safety, function, and maintainability of the completed project. Reviews should provide for timely and effective adjustments when necessary.

Just prior to construction contract acceptance, the resident engineer requests assistance from a landscape maintenance representative and the project landscape architect to develop a “punch list” of items that do not meet Caltrans’ requirements. Particular attention should be paid to compliance with water conservation requirements, including proper irrigation controller programming and operation and

compliance with stormwater permit requirements, which, if not rectified, could result in additional maintenance to meet regional water quality control board requirements.

Transfer to Maintenance

Upon Caltrans' acceptance of a new highway planting or roadside rehabilitation project, the district landscape architect and project landscape architect meet with district field maintenance for a project review. The project landscape architect must provide the district field maintenance with a file that includes product and equipment data, names and phone numbers of contact persons, and the design intent statement.

SECTION 3 Safety Roadside Rest Areas

ARTICLE 1 Definitions, General Policy, and Programs

Definitions

Safety roadside rest area – a facility that improves safety for the traveling public by allowing travelers to safely stop, rest, and manage their travel needs. Safety roadside rest areas provide an excellent opportunity for Caltrans to communicate with travelers.

Wayside stop – a facility designated by Caltrans, outside of the highway right-of-way, that provides products and services to the public, 24-hour access to public restrooms, and parking for automobiles and heavy trucks allowing for travelers to safely stop and rest.

Purpose of the Safety Roadside Rest Area System

The safety roadside rest area system is a safety component of the highway system providing roadside areas where travelers can safely stop, rest, and manage their travel needs. Planned with consideration of alternative stopping opportunities such as wayside stops, truck stops, commercial services, and vista points, the safety roadside rest area system provides public stopping opportunities where they are most needed, usually between large towns and at entrances to major metropolitan areas. To minimize the need for recurring maintenance activities, safety roadside rest areas are designed to support heavy use over many years.

Context Appropriateness

Safety roadside rest areas are unique pedestrian environments on the State Highway System where travelers (many of whom are unfamiliar with the local area) may get out of their vehicles and experience the local environment up close and on foot. Users may interact with other travelers, rest area maintenance crews, and perhaps law enforcement. Safety roadside rest areas provide travelers with a lasting impression of California, and that impression should be positive.

Safety roadside rest areas provide an opportunity for local communities, businesses, and public agencies (including those that manage tourism and recreational resources)

to intercept travelers and provide information and communication links. In many areas of the State, safety roadside rest areas can have a role in contributing to local economic development strategies.

The ideal safety roadside rest area site balances preservation of scenic, environmental, and cultural features with mobility, safety, and maintainability design requirements. Environmentally sensitive areas and their features may, in some instances, be suitable sites, but they should be protected from degradation by construction, maintenance, and public use.

Each safety roadside rest area should reflect and be integrated with the aesthetic, environmental, scenic, and cultural features (terrain, geology, vegetation, history, architecture, archaeology, and colors) of the region in which it is located. Architecture and landscape architectural development demand a high level of attention to maintaining contextual integrity through appropriate design details. The PDT must consider the existing natural and social context to develop an appropriate expression of its unique qualities for use in safety roadside rest area design.

Caltrans strives to work with local communities, trade and commerce organizations, the public, and other public agencies to ensure stakeholder collaboration in the development of safety roadside rest area improvements.

Use of Safety Roadside Rest Areas

Title 21 California Code of Regulations, Division 2, Chapter 20, regulates the use of safety roadside rest areas. Length of stay is limited to eight hours during any 24-hour period. Camping is prohibited. Solicitation of money and the sale or merchandising of food, goods, or services is prohibited, except for regulated newspaper vending, public telephones, commercial advertising, and vending machines operated by the blind under the California Department of Rehabilitation, Business Enterprise Program. Other non-commercial uses and activities may be considered when required by statute or requested in writing and approved by the Headquarters Landscape Architecture Program.

Statutory Requirements

The *California Streets and Highways Code*, Section 218 through Section 226.5, directs the California Transportation Commission (CTC) and Caltrans to plan, design, construct, and maintain a system of safety roadside rest areas on the State Highway

System, with associated costs paid from the State Highway Account. The *California Streets and Highways Code* also describes system planning criteria:

- In combination with other stopping opportunities, safety roadside rest areas should be located where they are most needed and approximately 30 minutes apart.
- Safety roadside rest areas may be provided at entrances to large metropolitan areas.
- Paired directional units should be provided on high-volume highways of four or more lanes; on all other highways, a single unit serving both directions should be provided.
- On high-volume highways, more safety roadside rest areas may be planned at strategic locations where needed.
- Caltrans shall design only those safety roadside rest areas that are reasonably economical, and that will provide travelers a safe place to stop for a short time during daytime and nighttime.
- The size of the units may differ according to location and potential use.
- Safety roadside rest areas may include, depending on size and use, vehicle parking, picnic tables, sanitary facilities, telephones, water, landscaping, tourist information panels, traveler service information facilities, and vending machines.
- Safety roadside rest areas shall not contain camping or recreational facilities.
- Caltrans must post, to the extent feasible, missing children information provided by the California Department of Justice and human trafficking posters.
- Caltrans shall authorize the placement of vending machines in a manner consistent with federal requirements. Caltrans will determine which safety roadside rest areas are suitable for vending machines, determine the vending machine locations within each safety roadside rest area, and approve the design and construction of any required vending structures.
- Caltrans may accept grants and financial or other assistance for safety roadside rest areas.

The *California Streets and Highways Code*, Section 226.5, provides for a joint economic development demonstration project for up to six new safety roadside rest areas.

- Caltrans may construct, operate, and maintain up to six new safety roadside rest area units as a joint economic development demonstration project, subject to the following:
  - There must be a public need for the safety roadside rest area, and the proposal must result in an economic savings to the State.

- Contracts for construction and maintenance of these facilities shall be awarded through competitive bidding.
- Caltrans may permit traveler-related commercial activities.
- No alcohol may be sold within safety roadside rest area facilities.
- Law enforcement responsibilities are the same as for the State Highway System.
- A public hearing must be held for each project to allow the local community and other interested parties to comment.
- Any funds received for the demonstration project shall be deposited in the State Highway Account.

State and Federal Accessibility Requirements

Safety roadside rest areas contain public facilities used by pedestrians, including, but not limited to, buildings, parking areas, sidewalks, curb cuts, curb ramps, telephones, vending machines, and picnic tables and must conform to State and federal accessibility requirements. For detailed information regarding the review process for pedestrian facilities on transportation projects, refer to *Design Information Bulletin 82* – Pedestrian Accessibility Guidelines for Highway Projects.

State Energy and Environmental Design Requirements

To comply with *Executive Order B-18-12*, Caltrans shall perform all of the following:

- take all cost-effective measures as described in the State of California Green Building Action Plan to build and operate the most energy-efficient and resource-efficient buildings.
- incorporate building commissioning to facilitate and improve building system operation.
- comply with applicable California Green Building Standard's (CALGreen) Tier 1 measures for new or major renovated State buildings under 10,000 square feet.
- obtain "Leadership in Energy and Environmental Design (LEED) Silver" or higher rating for new or major renovated State buildings larger than 10,000 square feet. The United States Green Building Council developed the LEED rating system to advance energy and material efficiency and sustainability.
- design and construct new or major renovated State buildings to exceed the applicable version of *Title 24 California Code of Regulations*, Part 6 by 15 percent.
- reduce water use 20 percent as measured against a 2010 baseline and strive for greater efficiencies.

- utilize alternate sources of water whenever cost effective for buildings and landscape.

The *Executive Order* and *Green Building Action Plan* are located at: http://www.green.ca.gov/resources.aspx

Caltrans is committed to the preservation and enhancement of California's resources and assets by minimizing the environmental impacts of projects. To help achieve this goal, all new and renovated safety roadside rest area buildings will be designed, constructed, and operated at a "LEED Silver" or higher rating, using the applicable version of LEED.

Project LEED and CALGreen components are identified through a collaborative effort between the Headquarters Division of Engineering Services and the design unit working with the project development team.

See Article 3 "Project Development Process" in this section for specific requirements in each phase of the project development process.

Safety Roadside Rest Area Master Plan

The *Safety Roadside Rest Area Master Plan* describes the ultimate safety roadside rest area system to be implemented as funding allows. The master plan identifies existing safety roadside rest areas, new safety roadside rest area needs, other stopping opportunities, and proposed closures and relocations.

The *Safety Roadside Rest Area Master Plan* includes existing units and highway segments identified as needing new rest area services. It also identifies parking capacity expansion needs at existing units to meet current and anticipated 20-year demands.

The Headquarters Landscape Architecture Program will consider recommendations for changes to the master plan upon request by the District Director. Districts should consider the requests of public agencies (including federal, State, and local agencies; tribal governments; or non-federally-recognized tribes). The Headquarters Landscape Architecture Program coordinates Caltrans and CTC concurrence for all master plan revisions.

Safety Roadside Rest Area Rehabilitation Program

The purpose of the SHOPP Safety Roadside Rest Area Rehabilitation Program is to improve public health, safety, security, accessibility, and operational maintainability of existing safety roadside rest areas. Examples of improvements include operational improvements; capacity expansion (parking and comfort stations); rehabilitation or replacement of exiting structural elements; compliance with the California Department of Industrial Relations-Division of Occupational Safety and Health, the *Americans with Disabilities Act of1990* (ADA), or sewage and drinking water quality mandates; electrical system upgrades; and upgrades to current ramp standards.

New Safety Roadside Rest Areas Program

The purpose of the SHOPP New Safety Roadside Rest Areas Program is to provide for new, appropriately spaced stopping opportunities as an integral part of the State Highway System where travelers may stop, rest, relax, obtain travel information, and return to the highway more alert and driving safely. All land, structures, landscaping, utilities and other facilities such as: restrooms, California Highway Patrol (CHP) office and storage space, tables, drinking fountains, telephones, motorist information, and trash receptacles are included. Partnerships and joint development on or off the State Highway System for safety roadside rest areas or other stopping opportunities with the private sector or public agencies are included.

The priority of the New Safety Roadside Rest Areas Program is to provide for additional safety roadside rest areas and other stopping opportunities on the Interstate System where there are gaps of more than 100 miles between existing safety roadside rest areas, where the closest safety roadside rest areas need additional parking capacity, and where unauthorized roadside parking is frequently observed. High-priority needs include additional safety roadside rest areas on Interstate 5 between Sacramento and San Diego, Interstate 80 between Sacramento and Oakland, and Interstates 8, 10, 15, and 40 in the desert areas.

Wayside Stop Demonstration Program

A wayside stop is defined as a facility near a highway but not within the highway right-of-way, designated by Caltrans as meeting the eligibility criteria of this program, that provides products and services to the public, 24-hour access to public restrooms, and parking for automobiles and heavy trucks. The Wayside Stop Demonstration Program conforms to the Interstate Oasis Program FHWA criteria.

In partnership with the private sector or public sector, wayside stop facilities that may alleviate overcrowding at nearby existing safety roadside rest areas may be developed outside the State highway right-of-way. Wayside stop facilities provide an alternative to expanding parking at existing safety roadside rest areas.

The Wayside Stop Demonstration Program has been established to enhance safety and convenience for highway users by designating and providing signage to certain facilities off the freeway at six locations that will provide increased opportunities to stop for rest, use restroom facilities, and obtain basic services.

Caltrans may enter into an agreement with the operators of commercial or governmental facilities located along the State Highway System to designate those facilities as wayside stops, and to provide highway signage. One or more entities may participate jointly in the agreement.

Each wayside stop should consist of facilities that are clustered in a single, easily identifiable location. Unless they serve a single direction of highway traffic, wayside stops should not be located closer than 20 miles apart. In cases where no single business meets all of the eligibility criteria, a combination of two or more businesses may qualify as a wayside stop if they are located immediately adjacent to each other, are easily accessible on foot from each other's parking lots by pedestrian walkways that are compliant with the *Americans with Disabilities Act of 1990*, and do not require crossing a public highway.

The wayside stop shall comply with laws concerning the provision of public accommodation without regard to race, religion, color, sex, national origin, or disability.

To qualify for wayside stop designation and highway signage, the facility must meet the following criteria:

- The facility must be located in an area designated by Caltrans as deficient in safety roadside rest area services. The location should correspond to a new rest area or stopping opportunity need as indicated on the current *Safety Roadside Rest Area Master Plan* or should supplement the capacity of an existing safety roadside rest area that is deficient in parking capacity.
- The facility must provide parking for automobiles and long vehicles (including commercial trucks) sufficient to meet anticipated demand, modern and sanitary rest rooms, and drinking fountains, at no charge to the public. Parking areas and paths of travel shall be well lit.

- Operators may designate a time limit for free parking, but travelers must be allowed at least 10 hours of free parking.
- The facility must be open and available to the public 24 hours per day, seven days per week, and must comply with the *Americans with Disabilities Act of 1990*.
- The facility shall provide products and services to the public. These products and services should include a public pay telephone; food (vending, snacks, fast food, and/or full service); and fuel, oil, and water for automobiles, trucks, and other motor vehicles. The facility may elect to provide additional products, services or amenities.
- The facility must be within three miles of the highway and shall be reached from a route that an engineering study determines can safely and conveniently accommodate vehicles of the type, size, and weight that would be traveling to the facility, entering and leaving the facility, returning to the highway, and continuing in the original direction of travel.
- The facility must include parking areas and ingress/egress points, that an engineering study determines can safely and efficiently accommodate movements into and out of the site, on-site circulation, and parking by all vehicles, including heavy trucks of the type, size and weight anticipated to use the facility.
- The facility operator must provide written assurance from local law enforcement authorities that the facility will receive adequate police protection.
- The facility operator must provide sufficient maintenance so that all facilities available to the public are clean and usable.
- The facility should be staffed by at least one person 24 hours per day, 365 days per year.

A PR should be prepared that addresses the anticipated increase in traffic, parking, water, and wastewater-disposal demand and the impacts on the local community and environment. The public and affected agencies should be afforded an opportunity to comment on the proposed action.

Signage shall conform to the *California Manual on Uniform Traffic Control Devices (California MUTCD)*. Off-highway directional signs must be in place prior to placement of signs within the operational State right-of-way.

ARTICLE 2 Responsibilities

New and rehabilitated safety roadside rest area projects follow a specialized project development process due to their uniqueness. Districts, Headquarters Division of Engineering Services, and the Headquarters Landscape Architecture Program must work together closely for safety roadside rest area project development. Due to the limited expertise in the design of safety roadside rest areas, including architectural, structural, and site design the Headquarters Division of Engineering Services-Structure Design, Office of Transportation Architecture and the Headquarters Landscape Architecture Program provide design expertise to assist the districts with project delivery.

Headquarters Landscape Architecture Program

Program Manager

The Headquarters Division of Design-Landscape Architecture Program Deputy Division Chief is the program manager for safety roadside rest area projects. The program manager:

- develops, approves, and maintains safety roadside rest area planning policy and guidance for the statewide *Safety Roadside Rest Area Master Plan* and sets priorities for new safety roadside rest areas, safety roadside rest area rehabilitation work, and wayside stops.
- recommends to the SHOPP Manager safety roadside rest area needs and deficiencies, performance objectives, and projects for inclusion in the *2015 Ten-Year State Highway Operation and Protection Program Plan (SHOPP Plan)* and the biennial SHOPP.
- recommends to the Headquarters Division of Transportation Programming the funding of safety roadside rest area projects by the CTC.
- is responsible for the development and consistent application of policy, procedures, practices, and design standards.
- advises the districts on project identification and development, prioritization of candidate projects, and provides technical expertise.
- collaborates with the district to resolve programming, funding, and design issues.
- provides training related to the project development and design of safety roadside rest areas.

Program Advisor

The program advisor:

- implements the day-to-day safety roadside rest area responsibilities of the program manager.
- recommends approval of safety roadside rest area policies, procedures, plans, and other standards, and the resolution of non-routine issues by the program manager.

Headquarters Landscape Architecture Program Roadside Facilities Coordinator

The roadside facilities coordinator:

- recommends and maintains safety roadside rest area design policies, guidelines, procedures, and standards.
- maintains statewide liaison with internal and external stakeholders.
- provides and distributes updated safety roadside rest area policies to the district safety roadside rest area coordinators.
- monitors compliance with the *Americans with Disabilities Act of 1990* and *Design Information Bulletin 82* – Pedestrian Accessibility Guidelines for Highway Projects.
- oversees the development and updating of the statewide *Safety Roadside Rest Area Master Plan* and guides the districts in identifying *2015 Ten-Year State Highway Operation and Protection Program Plan (SHOPP Plan)* needs.

Headquarters Landscape Architecture Program District Coordinators

The district coordinators:

- assist the district by providing guidance and training.
- assist the PDT to ensure an appropriate, context-sensitive approach to the planning and design of safety roadside rest area sites, architecture, and site furnishings.
- review conceptual site plan, schematic site plan, architectural building concepts, and architectural schematic building plans.
- facilitate the project planning and development processes through review, liaison, and coordination.
- assist the district landscape architect and PDT members by providing guidance regarding policies, procedures, practices, and standards in cooperation with the Headquarters Landscape Architecture Program Roadside Facilities Coordinator.

Headquarters Division of Engineering Services-Structure Design, Office of Transportation Architecture

Architect

The architect:

- in collaboration with the district landscape architect, is responsible for the development of architectural building design and building aesthetics.
- as a PDT member, assists the district landscape architect with the development of site plans for new safety roadside rest areas and rehabilitated safety roadside rest areas that include new architecture, and with the modification of existing pedestrian facilities.
- is primarily responsible for the development of the architectural building concepts and architectural schematic building plans, and assists in the development of the conceptual site plan and schematic site plan in collaboration with the district landscape architect on aesthetic and site planning aspects, and based on the district's aesthetic recommendations.
- coordinates the work of building design disciplines within the Office of Transportation Architecture and Office of Electrical, Mechanical, Water and Wastewater Engineering in the Headquarters Division of Engineering Services-Structure Design during the planning and design phases and coordinates support through construction. The specialists include structural, electrical, mechanical, water and wastewater engineers, architects, building estimators, and specification writers.
- provides design standards (including CALGreen requirements) and coordinates the Headquarters Division of Engineering Services review and oversight of work performed by consultants.
- acts as the technical resource for *Design Information Bulletin 82* – Pedestrian Accessibility Guidelines for Highway Projects, for architectural building work.
- for the Headquarters Division of Engineering Services portions of the PS&E, is responsible for review and approval of facility design in conformance with *Design Information Bulletin 82* – Pedestrian Accessibility Guidelines for Highway Projects, and for coordinating the State Fire Marshal review for fire code compliance.

The architect will also be the project LEED coordinator and will:

- ensure that appropriate LEED credits are identified and optimized.
- coordinate with various functional units to develop the LEED credit checklist from project initiation through construction.

- submit completed LEED templates to the United States Green Building Council, when applicable.
- ensure that CALGreen requirements are met.

The evaluation and LEED components that are part of project scope of work must be documented in the project credit checklist, the Owner's Project Requirements, and the Basis of Design. The appropriate LEED documents shall be attached to the PID and the PR.

Headquarters Division of Engineering Services Leadership in Energy and Environmental Design Project Reviewer

The Headquarters Division of Engineering Services LEED project reviewer, independent of the PDT:

- reviews project documentation for each LEED project.
- determines if the project achieved the credits pursued at each major milestone.

District

District Director

The District Director ensures project delivery policy compliance when developing and implementing safety roadside rest area projects.

District Landscape Architect

The district landscape architect:

- identifies district safety roadside rest area needs, recommends projects, and develops site plans for new and rehabilitated safety roadside rest areas, including architecture, pedestrian facilities, and landscaping.
- as a PDT member, assists the architect with the architecture, layout, design, and aesthetics of individual safety roadside rest areas.
- develops the conceptual site plan and schematic site plan.
- assists in the development of the architectural building concepts and architectural schematic building plans.
- acts as the technical resource for questions regarding *Design Information Bulletin 82* – Pedestrian Accessibility Guidelines for Highway Projects, for site pedestrian facilities (excluding building work) for safety roadside rest areas.

- coordinates the review of site pedestrian facilities in conformance with *Design Information Bulletin 82* – Pedestrian Accessibility Guidelines for Highway Projects.

Project Manager

The project manager is responsible for managing a project's scope, cost, and delivery schedule. The project manager communicates frequently with the district landscape architect, architect, Headquarters Landscape Architecture Program Roadside Facilities Coordinator, district maintenance, district project engineer (PE), and other functional units.

Project Engineer

The district project engineer is responsible for developing the civil engineering portion of the district PS&E package. The project engineer works closely with the district landscape architect, architect, and the PDT to coordinate the various project aspects.

District Safety Roadside Rest Area Coordinator

The district safety roadside rest area coordinator:

- serves as the district's focal point for coordinating safety roadside rest area needs planning, project programming, traveler services (including vending and public information), maintenance, and partnerships with other public agencies and the private sector.
- provides liaison between Headquarters and the district, coordinating safety roadside rest area issues across various program functional units (planning, design, environmental, construction, operations, and maintenance).

The district safety roadside rest area coordinator is designated by the District Director. At the District Director's discretion, separate coordinators may be designated for planning/design and maintenance/operations.

A current list of district safety roadside rest area system coordinators is located at: http://www.dot.ca.gov/hq/LandArch/16_livability/srra/srra-contacts.htm

ARTICLE 3 Project Development Process

General

This article describes aspects of the project development process that are unique to safety roadside rest area projects.

To be eligible for programming, new safety roadside rest areas must be identified in the current *Safety Roadside Rest Area Master Plan*.

Safety Roadside Rest Area Partnership Projects

Joint economic development demonstration projects are managed and guided by the Headquarters Landscape Architecture Program, with implementation by the districts. Proposals for joint economic development of new safety roadside rest areas by private partners or other public agencies should be coordinated with the Headquarters Landscape Architecture Program. Funding for joint economic development demonstration projects requires approval from the SHOPP Executive Committee.

Caltrans does not have statutory authority to commercialize existing safety roadside rest areas.

A viable safety roadside rest area joint economic development partnership may consist of a private or public partner that agrees to share in at least 50 percent of the total construction cost of a standard public safety roadside rest area facility, including, but not limited to, ramps, access roads, parking, utilities, architecture, landscape, lighting, signs, and fences. In conjunction with traditional safety roadside rest area facilities, the partner may fund, construct, maintain, and operate traveler-related commercial facilities, subject to State and federal laws, regulations, and requirements. The partner should maintain both the public and private facilities for an agreed-to term, generally 25 to 30 years.

It is preferred that Caltrans or another public agency own the right-of-way underlying any facilities or improvements funded with State or federal funds. The partner may lease the land necessary for traveler-related commercial facilities from Caltrans or may construct those facilities on abutting land owned by others.

FHWA regulations and the *California Code of Regulations* restrict or prohibit most commercial activities within controlled-access Federal-aid highways.

Commercialized safety roadside rest areas are limited to locations along conventional highways or the area within one-half mile of a freeway ingress and egress.

Rest area partnerships are of interest, both positive and negative, to the local community and rest area stakeholders. Local and regional business competition, goods-movement needs, environmental concerns, and employment opportunities for the disabled and blind are among the issues of concern. Implementation of a successful partnership requires a willing partner, an economically feasible proposal, open communication, fairness to all interests, respect of the inherent risks and effort of private entrepreneurs, and attention to the concerns of all stakeholders.

Site Requirements

Prior to programming any new safety roadside rest area or major safety roadside rest area rehabilitation, the district must document the type and adequacy (capacity, quality, and reliability) of potable water, electrical power, and wastewater disposal. Commercial or municipal water and wastewater facilities should be utilized where available. The district should analyze and document the feasibility and cost of developing, maintaining, and operating on-site wells and wastewater disposal systems.

A traffic analysis should be performed to determine the potential parking capacity demand for automobiles and long vehicles (commercial trucks, buses, recreational vehicles, and automobiles with trailers). Based upon traffic analysis, the comfort station capacity and utility demands can be determined by the Headquarters Division of Engineering Services. The district should determine to what extent the proposed site could accommodate the traffic demand without diminishing the site's environmental and scenic qualities.

Prior to programming, the district must demonstrate the safety and adequacy of ingress and egress to the site as well as pedestrian and vehicular circulation within the site.

Site and Architectural Analysis

Professional landscape architectural design processes should be applied to the site design of all new safety roadside rest areas and safety roadside rest area rehabilitation projects. These include development of program/scope, base mapping, site inventory (topography, vegetation, hydrology, drainage, views, and wind), site analysis, consideration of alternatives, sustainability, and design synthesis.

Site designs should address the potential for future expansion, physical site constraints/capacity, and the appropriate protection or incorporation of site qualities.

The district landscape architect collaborates with the architect and district maintenance to provide the PDT with a recommendation regarding rehabilitation or replacement of comfort stations. Due to age and condition of comfort stations may not be practical or cost effective to rehabilitate. When scoping each safety roadside rest area rehabilitation project, the cost and advantages of demolishing and replacing the existing comfort stations versus rehabilitation should be analyzed. The age, condition, materials, aesthetic qualities, before and after fixture capacity, and design requirements of the existing structure should be considered.

The Headquarters Division of Engineering Services will provide advance planning studies on building costs prior to project programming upon request by the district PDT.

Leadership in Energy and Environmental Design and California Green Building Standards Code Analysis

The PDT uses the LEED Credit Checklist and CALGreen requirements to evaluate LEED credit areas, using the applicable version of LEED.

The PDT uses the *LEED Roles and Responsibilities for Caltrans Groups/Disciplines* to determine functional responsibility for each of the LEED credits.

Contact the Headquarters Division of Engineering Services-Structure Design, Office of Transportation Architecture for a copy of the LEED Credit Checklist, CALGreen requirements, and the *LEED Roles and Responsibilities for Caltrans Groups/Disciplines.*

Stakeholder Involvement

The PDT identifies, contacts, and engages external safety roadside rest area stakeholders (local communities, chambers of commerce, historical societies, planning and land use professionals, tourism and recreational agencies, Native American tribes, and trucking and goods movement associations) to assist in assessing the natural, cultural, and aesthetic context of the project; participate in the selection of safety roadside rest area style; and partner in the development and implementation of public information and interpretive displays. Stakeholders can

also be valuable partners in seeking additional safety roadside rest area enhancements through other funding sources.

Design Charrette Process

The design charrette process is recommended for the development of conceptual site plans, architectural building concepts, LEED goals and PID LEED Credit Checklist, schematic site plans, schematic building plans, the LEED Owner's Project Requirements, the LEED Basis of Design, and PR LEED Credit Checklist. Charrettes can accelerate the design and delivery process and ensure that important criteria are identified and incorporated initially into the design analysis and development.

Collaborative efforts to develop the conceptual and schematic site plans include the district landscape architect; project landscape architect; architect; Headquarters Division of Engineering Services design engineers; project engineer; project manager; representation from maintenance, environmental, and right-of-way; Headquarters Landscape Architecture Program Roadside Facilities Coordinator; Headquarters Landscape Architecture Program district coordinator; external stakeholders such as: CHP, Bureau of Land Management, United States Forest Service, blind vendors, and others as appropriate to the project.

The Headquarters Landscape Architecture Program, and the Office of Transportation Architecture and Office of Electrical, Mechanical, Water, and Wastewater Engineering within the Headquarters Division of Engineering Services-Structure Design provide guidance on policy and standards issues and LEED considerations, and share ideas from a statewide perspective.

Project Initiation Phase

At the scoping stage for a new safety roadside rest area and safety roadside rest area rehabilitation projects, a PSR is required as the PID for programming. A conceptual site plan must be developed, typically a bubble diagram that illustrates the following elements at their approximate location and scale: right-of-way, vehicular and pedestrian circulation patterns, existing and proposed structures, and existing underground and overhead utilities.

Expansion required to satisfy 20-year design needs should be shown diagrammatically as well. If future expansion is limited by physical site constraints, show only that expansion that is practical and describe unmet needs.

The context analysis studies and conceptual site plan are prepared by the district landscape architect, in consultation with the architect and other PDT members, and included in the PSR.

Architectural building concepts, including diagrammatic floor plans (bubble diagrams), circulation patterns, and elevation sketches are prepared by the architect for inclusion in the PSR. Architectural style, elevation, and construction detail concepts should be derived by analyzing local and regional architecture, historic and cultural context, and the natural environment. For safety roadside rest area rehabilitation projects that replace or significantly modify the existing architecture, the architect should develop a minimum of three contextually appropriate architectural building concepts for consideration.

The PDT shall incorporate CALGreen requirements and establish goals for LEED elements of the project regarding indoor and site environmental concerns, energy use, equipment efficiency, and building occupancy and management. A draft Owner's Project Requirements and Basis of Design and a completed LEED Credit Checklist shall be attached to the PSR. The Owner's Project Requirements, Basis of Design, and Checklist shall be reviewed by the Headquarters Division of Engineering Services LEED Project Reviewer prior to PSR approval.

The conceptual site plan and recommended architectural building concepts shall be reviewed with the Headquarters Landscape Architecture Program Roadside Facilities Coordinator prior to PSR approval. PSRs for safety roadside rest area projects must include an inventory of known environmental resources, identification of potential environmental issues and constraints, a description of potential hazardous materials or waste in the project area (including buildings at the project site), the type of environmental document anticipated for NEPA and/or CEQA compliance, and potential mitigation measures and their estimated costs. Refer to Appendix L – Preparation Guidelines for Project Study Report for general information on PID requirements.

Refer to Appendix X – Preparation Guidelines for Project Study Report (Safety Roadside Rest Area) for the format, requirements, and instructions for PSRs for major safety roadside rest area and safety roadside rest area rehabilitation projects.

Refer to Appendix R – Small Capital Value Projects Project Initiation Document for the PID format and requirements for sewage and drinking water compliance projects with a total combined capital and support cost of $3,000,000 or less.

Project Approval and Environmental Documentation Phase

A PR is required for all new safety roadside rest areas, safety roadside rest area rehabilitations, and wayside stop demonstration projects. The PR refines the project purpose and scope described in the PSR.

To facilitate Headquarters Division of Engineering Services building design, a building site data submittal must be completed by the district PDT and then submitted to the architect.

A schematic site plan refines the conceptual site plan (bubble diagram) and must be prepared for all new safety roadside rest area projects and safety roadside rest area rehabilitation projects that involve the demolition and replacement of existing comfort stations or the placement of new buildings. The schematic site plan may manually drafted and must be of a scale sufficient to show the location and arrangement of site elements, including buildings, parking areas, walkways, benches, tables, picnic structures, lighting fixtures, potable water faucets, trash receptacles, dumpster enclosures, kiosks, trees, and lawn areas (generally 1″=20′).

The schematic site plan should be prepared by the district landscape architect and included in the PR.

The architect shall prepare schematic architectural building plans that are a refinement of the preferred conceptual alternative selected by the PDT and shall include floor plans and a view of each elevation.

A completed LEED Owner's Project Requirements, Basis of Design, LEED Credit Checklist, and a list of CALGreen features shall be attached to the PR. The documents shall be reviewed by the Headquarters Division of Engineering Services LEED Project Reviewer prior to PR approval.

The schematic site plan and schematic architectural building plans shall be reviewed with the Headquarters Landscape Architecture Program Safety Roadside Rest Area Coordinator and the program manager prior to PR approval.

Refer to Appendix M – Preparation Guidelines for Project Report (Safety Roadside Rest Area) for the PR format, requirements, and instructions for safety roadside rest area and safety roadside rest area rehabilitation projects.

Plans, Specifications, and Estimate Phase

Preliminary Site Plan and Preliminary Building Design

A preliminary site plan refines the schematic site plan and must be finalized before the Office of Transportation Architecture and Office of Electrical, Mechanical, Water, and Wastewater Engineering within the Headquarters Division of Engineering Services-Structure Design can begin their portion of the PS&E. This should occur at or before the 30 percent PS&E stage. At this stage, all site elements and plan dimensions need to be accurately depicted and drafted electronically.

A preliminary building design plan refines the schematic architectural building plan. Upon completion of the preliminary building design, the architect will present the design to the district for approval by the PDT.

Functional units responsible for individual LEED Credits submit documentation to the architect as soon as sufficient information is available to complete the necessary calculations.

District Plans, Specifications, and Estimate Development

To facilitate coordination of the combined PS&E package, the district PS&E package is completed concurrently with the Headquarters Division of Engineering Services PS&E. The district is responsible for coordinating and ensuring the consistency of the final, combined PS&E package.

At PS&E, the Owner's Project Requirements and LEED Basis of Design are updated, and the completed LEED Credit Checklist incorporated into the contract documents as a plan sheet. These documents are used to develop the LEED credit templates to be submitted to the United States Green Building Council.

ARTICLE 4 Closure

Emergency or Intermittent Closure

An emergency closure is an unanticipated temporary closure of facilities and temporary suspension of services at a safety roadside rest area unit to ensure public health, safety, or welfare.

An intermittent closure is a planned and regularly scheduled temporary closure of facilities and temporary suspension of services at a safety roadside rest area unit to

respond to seasonal issues (such as a snow), an expected or documented reduction in demand during a specified period of time (a season, certain days, or months), or due to extraordinary budget issues.

Policies and procedures for emergency and intermittent closures are addressed in the *Maintenance Manual*.

Permanent Closure

Permanent closure is the termination of services and facilities at an existing safety roadside rest area unit and the removal of that unit from the *Safety Roadside Rest Area Master Plan*.

Permanent closure, replacement, or relocation of an existing safety roadside rest area constitutes a project.

A unit of the safety roadside rest area system may be permanently closed only after the following conditions have been met:

- A project has been initiated for closure of the facility following existing project development procedures.
- The public and stakeholders have been provided an opportunity for public hearing.
- Environmental analysis indicates impacts will be insignificant or may be mitigated.
- Traffic analysis has addressed mainline and ramp traffic volumes and vehicle types (auto, commercial trucks, and buses) for the safety roadside rest area and adjacent safety roadside rest areas in the system.
- The CHP Division level office has been provided an opportunity to comment on the proposed closure.
- Route-segment accident and roadside parking history has been investigated and addressed.
- The resulting gap in safety roadside rest area spacing has been addressed relative to spacing guidelines in the statutes and the *Safety Roadside Rest Area Master Plan*.
- Availability of alternative safe and free parking and restroom opportunities have been addressed.
- Alternatives such as replacement, relocation, and operation by others have been evaluated.
- The FHWA has been provided an opportunity to comment on the proposed closure and identified reimbursement requirements.

- The District Director finds and recommends that safety roadside rest area closure will not reduce traveler safety.
- The Safety Roadside Rest Area Program Manager (Headquarters Division of Design-Landscape Architecture Program Deputy Division Chief) concurs that the safety roadside rest area closure will not significantly impact the safety roadside rest area system and amends the current *Safety Roadside Rest Area Master Plan*.
- The CTC concurs with the action.

Major stakeholders, including the local counties, cities, communities, and other parties should be notified and provided a 30-day opportunity to comment.

Districts should obtain the concurrence of the Safety Roadside Rest Area Program Manager (Headquarters Division of Design-Landscape Architecture Program Deputy Division Chief) prior to approval of the PSR or PR.

In signing the PSR or PR, the District Director should find that the safety roadside rest area closure will not impact the function of adjacent safety roadside rest areas. Consideration should be given to potential impacts to safety roadside rest areas in adjacent districts or states. The approved PSR constitutes district recommendation to amend the *Safety Roadside Rest Area Master Plan* and permanently closing and disposing of the safety roadside rest area unit(s).

If the Safety Roadside Rest Area Program Manager concurs with the district recommendation, the proposal either will be recommended for programming (and subsequently for funding) as a capital project or presented to the CTC for concurrence.

Temporary Closure for Construction

Construction closure is a planned and scheduled temporary closure of facilities and temporary suspension of services at an existing safety roadside rest area unit due to rehabilitation or reconstruction contracts. It is the policy of Caltrans to close any unit of the safety roadside rest area system during construction, in accordance with the following guidelines:

- The local community, CHP Division level office, contract maintenance forces, California Department of Rehabilitation Business Enterprise Program (BEP) vendors, rest area stakeholders, and general public have been notified well in advance of the closures and are provided with timely updates of information before and during the closure.

- Temporary or alternative restroom, water, and telephone services for the public during the construction closure period have been considered, if need is indicated and costs are reasonable.
- Advance public notification of the closures should be provided through press releases, signs on the highway, and signs or posters at the adjacent safety roadside rest areas.
- Efforts to shorten the duration of the construction period to reduce impacts to the traveler should be considered when feasible, economical, and reasonable.

ARTICLE 5 References

The *Highway Design Manual*, Topic 903 – Safety Roadside Rest Area Standards and Guidelines, describes design standards for new safety roadside rest areas.

The *Maintenance Manual* provides policies and procedures for safety roadside rest area emergency and intermittent closures and for closures due to routine or planned maintenance activities.

The Headquarters Division of Engineering Services *TAEMW&W Memo to Designers 7-1, Project Delivery Guide,* explains the architectural, electrical, mechanical, water and wastewater project delivery process from PS&E start to final structure PS&E.

The United States Green Building Council *LEED for New Construction Current Version* Reference Guide provides guidance, resources, and information on the process of achieving LEED certification for new or major reconstruction of safety roadside rest areas.

The American Association of State Highway and Transportation Officials (AASHTO) *Guide for Development of Rest Areas on Major Arterials and Freeways, Third Edition (2000)* provides useful guidance for safety roadside rest area planning and design.

SECTION 4 Vista Points

ARTICLE 1 General Policy

Purpose of Vista Points

Caltrans recognizes that California's highways traverse areas of scenic beauty and pass by points of visual interest where the traveling public desire to safely pull off the highway to experience the scenic view and take a short break from driving. To satisfy traveler expectations, Caltrans provides vista points at appropriate scenic locations.

A vista point is a roadside facility that permits travelers to safely exit the highway to park, get out of the vehicle, and view a scenic panorama or point of visual interest. Vista points typically include parking areas, sidewalks, and viewing areas, and pedestrian amenities such as benches, interpretive displays, and bicycle parking. In some cases, vista points may also include picnic tables, rest rooms, trash receptacles, and drinking fountains.

General Considerations

Vista points provide travelers with a lasting impression of California's environmental diversity and scenic beauty. Each vista point should reflect and reinforce the aesthetic, scenic, environmental, and cultural features of its surrounding region and should carefully balance preservation of these features with safety, mobility, and maintainability requirements.

Development of new vista points should be considered in the planning and design of all transportation improvement projects. New vista points should be implemented as part of a roadway construction project.

Rehabilitation of an existing vista point may be planned and designed as part of a roadway construction project or as separate stand-alone vista point project.

Vista points may also be integrated into new or existing safety roadside rest areas.

Preservation of Views

As part of providing travelers a place to stop and safely take in a scenic view, the preservation and enhancement of scenic views is a paramount design concern in

designing a vista point. Site infrastructure that detracts from scenic views should be screened or located outside the scenic viewshed. Attractive views may be enhanced and revealed by selectively pruning or removing existing vegetation. Proposed vista point sites where future off-site development or vegetation growth may block scenic views should be avoided.

Scenic views at existing vista points may become obscured or degraded by unforeseen development or vegetation growth outside the right-of-way. Efforts should be made to work with adjacent property owners to reclaim lost views through vegetation pruning or removal of vegetation. When views cannot be restored, the vista point's designation and signage must be removed and the facility designated and signed as a map stop. A map stop provides amenities similar to a vista point but does not feature scenic views.

Americans with Disabilities Act of 1990 Compliance

To be designated a vista point, the site must be paved and provide access conforming to State and federal accessibility requirements (*Americans with Disabilities Act of 1990* and *Design Information Bulletin 82* – Pedestrian Accessibility Guidelines for Highway Projects). Unpaved pullouts located beyond the shoulder are not designated vista points.

Signage Requirements

New vista points must include signage conforming to the *California Manual on Uniform Traffic Control Devices*. Existing facilities designated by signs as scenic overlooks, scenic areas, scenic views, or viewing areas must also conform to the *California Manual on Uniform Traffic Control Devices*. Signage not meeting *California Manual on Uniform Traffic Control Devices* requirements must be replaced as part of adjacent roadway construction projects or as part of normal maintenance.

Vista Point Inventory

Vista points are listed in Caltrans' vista point inventory. Contact the Roadside Facilities Coordinator in the Headquarters Landscape Architecture Program to add a new vista point to the inventory.

ARTICLE 2 Project Development Process

The district landscape architect provides the PDT with recommendations regarding the vista point site location, scenic view orientation, and conceptual site design. Design concepts for vista points should be derived from an analysis of the local and regional setting, the historic and cultural context, and the natural environment.

To ensure stakeholder collaboration in the development of new vista points, the PDT identifies, contacts, and engages external stakeholders (local communities, historical societies, tourism and recreational agencies, and Native American tribes) in assessing the natural, cultural, and aesthetic context of the project area and in the development of amenities such as interpretive displays.

While Caltrans typically holds fee simple ownership of a vista point site, it may be necessary or desirable to construct a vista point on land owned by other State, federal or tribal agencies. Work to obtain right-of-way agreements or easements with other public agencies begins early in the project development process.

During PA&ED, a preliminary site plan is prepared by the district landscape architect depicting the right-of-way, topography, pedestrian circulation, and all existing and proposed site features and amenities for all new and rehabilitation vista point projects. The preliminary site plan must be of a scale sufficient to show the location and arrangement of parking areas, walkways, benches, picnic tables, trash receptacles, interpretive signs, and all other site elements that compose the design. The preliminary site plan must be included in the project report.

The safety and adequacy of ingress and egress to the site, and pedestrian and vehicular circulation within the site, must be demonstrated prior to programming. The proposed site must accommodate the traffic demand without diminishing the site's environmental and scenic qualities. The Headquarters Division of Design is responsible for the design and approval of roadway geometrics.

The district landscape architect is responsible for approving site selection, design concept, and site design for all vista points.

ARTICLE 3 References

Refer to the *Highway Design Manual*, Topic 904 – Vista Point Standards and Guidelines, for a description of vista point standard facilities and design components.

SECTION 5 Park-and-Ride Facilities

ARTICLE 1 General Policy

Purpose of the Park-and-Ride System

Park-and-ride lots are valuable resources that lead to improved performance of the entire transportation system. They provide a location to park vehicles to utilize carpools and access bus and rail services or bikeways, thereby taking vehicles off of local streets and the State Highway System. Planning, constructing, and maintaining a network of well-placed park-and-ride lots is an important element of an effective multi-modal transportation system. The goals of a network of park-and-ride lots include, but are not limited to, increasing the mobility options of travelers, increasing person throughput on the system, decreasing the number of vehicle trips, decreasing greenhouse gas and air pollution associated with transportation, and decreasing congestion on the system.

Use of Park-and-Ride Lots

The *California Vehicle Code*, Section 22518, regulates the use of fringe and transportation corridor parking facilities constructed, maintained, or operated by Caltrans. Fringe parking is an area for parking located on a commuter corridor, outside the central business district, and most often used by suburban residents who work or shop downtown.

Park-and-ride facilities shall be used only by persons using a bicycle or public transit, or engaged in ridesharing, including, but not limited to, carpools or vanpools. No person shall park any vehicle 30 feet or more in length or engage in loitering, camping, vending, or any other commercial activity, on any fringe or transportation corridor parking facility.

Statutory Requirements

Park-and-ride facilities must be considered for inclusion on all major transportation construction projects that include, but are not limited to, new freeways, interchange modifications, lane additions, transit facilities, and high-occupancy vehicle (HOV) lanes. It is important to consider park-and-ride facility needs before setting right-of-way lines. The district park-and-ride coordinator must be consulted as to the appropriateness of including park-and-ride facilities and for assistance in

documenting compliance with the legal requirements in the project initiation and project approval documents. Justification is required for proposals that are contrary to the park-and-ride coordinator's recommendations. The *California Streets and Highways Code*, Section 146.5, regulates park-and-ride development as follows:

a. The department may construct, maintain, and operate fringe and transportation corridor parking facilities along the state highway system when those facilities would reduce motor vehicle traffic congestion or improve highway safety. Those facilities may include child care projects that are part of an overall traffic reduction plan. For purposes of this code, those facilities are part of the state highway, and the department shall acquire the right-of-way necessary for those facilities in accordance with all of the laws and procedures applicable to other state highway projects.
b. The department may enter into agreements with other public agencies for the joint financing of fringe and transportation corridor parking facilities. The rights and obligations of the department and other public agencies with respect to those facilities shall be determined by agreement.
c. Fringe and transportation corridor parking facilities estimated to cost two hundred fifty thousand dollars ($250,000) or more and located in an urbanized area shall be limited to those facilities included by transportation planning agencies in a regional transportation improvement program prepared pursuant to Section 14527 of the Government Code. Not more than two million dollars ($2,000,000) of the state funds appropriated by the Legislature each year for state highway construction may be used for the purpose of constructing those facilities. In addition, for projects estimated to cost thirty thousand dollars ($30,000) or more, the state funds may be used only to match federal or local funds, or both.
d. It is the intent of the Legislature to allow the department to make available space in underutilized park and ride lots for child care purposes when linked to an overall traffic reduction plan. It is not the intent of the Legislature for the department to enter into the operation of those child care projects.

State and Federal Accessibility Requirements

Park-and-ride lots are public facilities used by pedestrians, including, but not limited to, parking areas, sidewalks, curb cuts, curb ramps, and telephones, and must conform to State and federal accessibility requirements. For detailed information regarding the review process for pedestrian facilities on transportation projects, refer to *Design Information Bulletin 82* – Pedestrian Accessibility Guidelines for Highway Projects.

Park-and-Ride Lease Program

In partnership with the private sector, park-and-ride facilities may be developed outside the right-of-way of controlled-access highways. Caltrans may enter into agreements and leases with private land owners for use of existing parking facilities such as shopping centers and church parking lots, or to develop parking facilities for the park-and-ride lease program.

Refer to the *Right of Way Manual*, Section 11.15.06.00, for the procedure for Caltrans to enter into park-and-ride agreements and leases.

ARTICLE 2 References

The *Highway Design Manual*, Topic 904 – Park and Ride Standards and Guidelines, describes design standards for park-and-ride facilities.

The *Maintenance Manual* provides policies and procedures for maintenance of park-and-ride lots.

The American Association of State Highway and Transportation Officials *Guide for Park-and-Ride Facilities* provides useful guidance for park-and-ride facility planning and design.

SECTION 6 Aesthetics

General

Aesthetics must be considered in the project planning and design process. This is particularly important for highways that traverse communities and areas of natural beauty and areas with a pronounced cultural context. A reasonable expenditure is justified to aesthetically enhance all transportation projects.

Aesthetic Considerations

The following factors should be considered when planning and designing a highway:

- New highways are located such that the alignments and appurtenances will be integrated into their surroundings, preserving or enhancing the natural and constructed environment to maintain contextual integrity. If applicable, the new highway incorporates scenic vistas. Aesthetic features such as natural slopes, rock outcroppings, and existing vegetation; scenic views; historic locales and cultural features; and important environmental areas should be preserved to the greatest extent possible.
- Highway alignment and profile are designed to fit the character of the area traversed and follow the existing terrain as closely as possible to minimize unsightly scars caused by excavation and embankment work.
- Slopes are rounded to blend with the surrounding topography.
- Provide wide medians, independent roadways, or separated grade and profile elevations on multi-lane facilities, to reduce the visual or environmental impact of the new highway, add scenic interest, and relieve the monotony of unilateral or parallel roadways wherever feasible.
- Consider bridges, tunnels, and retaining walls as substitutes for prominent excavation and embankment slopes when costs of such alternates are not excessive.
- When site requirements permit, stormwater treatment best management practices such as bioswales, infiltration, or sediment basins are sited and shaped to conform to the surrounding site conditions and terrain.
- Include aesthetic features to integrate transportation improvements with their surroundings, including special treatment for bridges, median barriers, walls, ground cover materials, and pavement.
- Selectively thin or remove existing vegetation such as trees or large shrubs to open up scenic vistas and provide a natural looking boundary between vegetated and cleared areas. Vegetation removal for aesthetic purposes requires concurrence of the district landscape architect and input from the landowner and the district environmental unit.

- Protect desirable vegetation such as: trees, specimen plants, diminishing native species, or historical plantings wherever possible. Destruction of desirable vegetation is avoided if possible, or minimized.
- Use project materials that reflect the character of the area.
- Identify project or comprehensive corridor plan aesthetic features through community involvement and public participation. Aesthetic design features should address community goals, values, or other defining transportation improvement characteristics.
- Strive for consistency and compatibility of highway design features throughout the transportation corridor, including bridges, overhead sign structures, noise barriers, retaining walls, traffic barriers, and paving.
- Develop corridor design themes with consistent form, line, color, material, and texture.
- Develop aesthetic treatments for wall structures in accordance with *Design Information Bulletin 88* – Wall Structure Aesthetic Guidelines.

SECTION 7 Blue Star Memorial Highways

ARTICLE 1 Purpose and General Policy

Purpose of Blue Star Memorial Highways

After World War II, a nationwide movement was started to pay tribute to the nation's armed forces by designating various State and national routes as "Blue Star Memorial Highways." In 1945, the National Council of State Garden Clubs, Inc. approved the Blue Star Memorial Program. California Garden Clubs, Inc. accepted the program in 1947 when the California State Legislature designated Highway 40 (now Route 80) and Highway 99 as Blue Star Memorial Highways.

General Policy

Caltrans cooperates with the California Garden Clubs, Inc. in erecting and maintaining appropriate memorial markers on highways that the California State Legislature has designated as Blue Star Memorial Highways.

ARTICLE 2 Responsibilities

Headquarters

The Headquarters Landscape Architecture Program coordinates the Blue Star Memorial Highway program. The Headquarters Division of Research, Innovation and System Information Office of Highway System Information and Performance, maintains a log of designated highway segments. This log is located at: http://www.dot.ca.gov/hq/LandArch/16_livability/blue_star/index.htm

The Division of Legislative Affairs assists the California Garden Clubs, Inc. with preparation of draft legislative resolutions.

District

The district:

- approves the location proposed for a marker and assures it is within a designated segment of highway. If the marker is located within an easement, the district is responsible for coordinating with the owner of record.

- assumes the administrative costs associated with the project, including permit processing and, if required, staff assistance and traffic control.

Because these markers designate memorial highways authorized by legislative resolutions, the district does not charge a fee for the required encroachment permits.

Permittee

The California Garden Clubs, Inc. is responsible for initiating and sponsoring legislative resolutions for Blue Star Memorial Highways through their local legislators.

The permittee:

- assumes the cost of all labor and materials involved in providing and installing the marker, as well as any modifications required to the facilities to accommodate the marker.
- restores, replaces, or removes markers that are vandalized or accidentally damaged.

ARTICLE 3 Guidelines

Location of Markers

The following guidelines govern the placement of Blue Star Memorial Highway markers:

- Markers may only be erected on highway segments that the California State Legislature has designated as Blue Star Memorial Highways.
- On designated highway segments with safety roadside rest areas, markers should be placed in safety roadside rest areas.
- On designated highway segments without safety roadside rest areas, markers may be placed at vista points, historical sites, or other appropriate areas approved by the district.
- The district works with the California Garden Clubs, Inc. to identify an appropriate site, determine if planting is desirable, and coordinate the project. Features such as paving, benches, or signs will not be permitted as part of a marker site.
- Placement of markers must consider the effect of the proposed marker on routine roadside maintenance activities, traffic flow, and the maintainability of the marker without interference to traffic.

Maintenance

The district performs litter pickup and other minor maintenance activities required in the right-of-way adjacent to the markers.

The permittee is responsible for maintaining the integrity of the marker. If a marker is vandalized or accidentally damaged, the district will consult with the permittee concerning its restoration, replacement, or removal.

Dedication Ceremony

The California Garden Clubs, Inc. may conduct a dedication ceremony at the marker installation site. A district representative attends this ceremony.

SECTION 8 Scenic Highways and Byways

ARTICLE 1 General Policy and Program

General

Many State highways are located in areas of outstanding natural beauty. California's Scenic Highway Program was created by the California State Legislature in 1963. Its purpose is to protect and enhance the natural scenic beauty of California highways and adjacent corridors through special conservation treatment. The State laws governing the Scenic Highway Program are found in the *California Streets and Highways Code*, Section 260 through Section 263.

A highway may be officially designated as scenic depending upon how much natural landscape is seen by travelers, the scenic quality of the landscape, and the extent to which development intrudes upon the traveler's enjoyment of the view.

To be eligible for designation, a highway segment must be included in the *California Streets and Highways Code*, Section 263. An official list of highways "eligible" for designation as scenic highways and those already "officially designated" as scenic highways is located at:
http://www.dot.ca.gov/hq/LandArch/16_livability/scenic_highways/scenic_hwy.htm

The status of a proposed State scenic highway changes from "eligible" to "officially designated" when the local governing body applies to Caltrans for scenic highway approval, adopts a Corridor Protection Program, and receives notification that the highway has been officially designated a scenic highway.

Corridor Protection Program

To nominate an eligible scenic highway for official designation, a city or county must identify and define the highway's scenic corridor. Scenic corridors consist of land visible from the highway, and is comprised primarily of scenic and natural features. Topography, vegetation, viewing distance, and/or jurisdictional lines determine the corridor boundaries. The city or county must adopt ordinances, zoning, and/or planning policies that preserve the scenic quality of the corridor or document that such regulations exist in local codes. The ordinances or policies should contain sufficient detail to avoid broad interpretation and effectively maintain the scenic

character of the corridor. These ordinances and/or policies make up the Corridor Protection Program.

The Corridor Protection Program must include five legislatively required elements:

1. Regulation of land use and density of development
2. Detailed land and site planning
3. Control of outdoor advertising
4. Careful attention to and control of earthmoving and landscaping
5. The design and appearance of structures and equipment

Public participation in developing these elements helps to assure popular support.

ARTICLE 2 Designation and Design Considerations

The Official Designation Process

To nominate an eligible scenic highway for official designation, contact the Caltrans district scenic highway coordinator. A coordinator list is located at: http://www.dot.ca.gov/hq/LandArch/16_livability/scenic_highways/scenic.hwy.coordinators.htm

The government entities with jurisdiction over lands adjacent to the highway must take the following steps:

1. Conduct a visual assessment of the route to determine if it meets current scenic highway criteria and to what extent, if any, development has intruded on the scenic views.
2. Submit a scenic highway proposal to the district scenic highway coordinator. The proposal package should include a letter of intent by the local governing body, maps showing the scenic corridor and existing zoning, a map overlay of development in the corridor, a narrative description of the scenic elements, and clear delineation and labeling of all city, county, and public land borders. The district and State scenic highway coordinators review the proposal and, if it is determined that the corridor meets the scenic criteria, the applicant proceeds to the next step. If the route fails this review, it is not advisable to continue seeking official designation.

3. Prepare and adopt a Corridor Protection Program. The district and State scenic highway coordinators review the corridor protection program. If it is determined that the program meets the legislative standards, a recommendation to designate the highway as scenic is forwarded to Caltrans Director.

Adding State Highways to the Scenic Highway System

A city or county may propose adding routes with outstanding scenic elements to the list of eligible State highways. However, additions can only be made through legislative action. Before consideration of a new route, consult the district scenic highway coordinator to ensure that the proposed route qualifies.

County Roads as Part of the Scenic Highway System

Although there is no official list of county highways eligible for scenic designation, county highways that have outstanding scenic qualities are considered eligible and do not require legislation. To receive official designation, the county must follow the same process required for official designation of State scenic highways.

Scenic Highway Identification

The California poppy serves as the logo for the Scenic Highway Program. Caltrans places signs with this logo along officially designated routes.

Scenic Highway Program Funding

There are no special State funding sources for preparation of scenic highway nominations. However, interested cities and counties can apply to Caltrans for Community Based Planning Grants for this purpose. More information is available on the Caltrans Headquarters Division of Transportation Planning website located at: http://www.dot.ca.gov/hq/tpp/offices/ocp/cbtp.html

Widening a Scenic Highway

While widening of scenic highways is allowed, Caltrans works with appropriate agencies to ensure protection of scenic corridors to the maximum extent feasible. Caltrans identifies impacts to scenic corridors (including degradation and obstruction of scenic views) as an integral part of its project planning, project development, and maintenance operations.

Official Designation Does Not Preclude Development

An effective Corridor Protection Program ensures that activities within the scenic corridor are compatible with scenic resource protection and consistent with community values while still allowing appropriate development.

Revoking a Scenic Highway Designation

The most critical element of the Scenic Highway Program is implementation and local enforcement of the Corridor Protection Program. Caltrans performs a compliance review of scenic highways every five years, or more often if appropriate. Revocation of a scenic highway designation can occur if Caltrans determines that the Corridor Protection Program or the scenic quality of the corridor is no longer in compliance. A city or county may request revocation if it no longer wishes to be part of the program.

Scenic Highway Designation Benefits

Official designation requires a local governing body to enact a Corridor Protection Program that protects and enhances scenic resources along the highway. A Corridor Protection Program, properly enforced by the locals can:

- protect the scenic corridor from encroachment of incompatible land uses such as junkyards, dumps, concrete plants, and gravel pits.
- mitigate activities within the corridor that detract from its scenic quality by proper siting, landscaping or screening.
- prohibit billboards and regulate on-site signs so that they do not detract from scenic views.
- make development more compatible with the environment and in harmony with the surroundings.
- regulate grading to prevent erosion and cause minimal alteration of existing contours and to preserve important vegetative features along the highway.
- preserve views of hillsides by minimizing development on steep slopes and along ridgelines.
- prevent the need for noise barriers (soundwalls) by requiring a minimum setback for residential development adjacent to a scenic highway.

Additional Benefits

- Enhancing community identity and pride, encouraging citizen commitment to preserve community values
- Enhancing land values by maintaining the scenic character of the corridor
- Providing a vehicle for the community to promote local tourism that is consistent with the community's scenic values

SECTION 9 Transportation Art

ARTICLE 1 General Procedure

Caltrans recognizes the effects of transportation facilities on local communities and encourages integrating these facilities with their surroundings to enhance and reflect the aesthetic, environmental, scenic, and cultural values of the affected community.

Caltrans supports enriching the cultural and visual environment of the transportation system and local communities by facilitating placement of transportation art within the State highway right-of-way.

Transportation art includes graphic or sculptural artwork, either freestanding or placed upon a required engineered transportation feature (such as a noise barrier, retaining wall, bridge, bridge abutment, bridge rail, or slope paving) that expresses unique attributes of a community's history, resources, or character.

Transportation art is proposed, provided, installed, maintained, and removed or restored by the public agency representing the area in which the art will be installed. The public agency may be a city, county, tribal government or non-federally recognized tribe.

Transportation art, community identification, and gateway monuments compare and contrast as follows:

Figure 29-4 Transportation Art, Community Identification, and Gateway Monuments

	May Include Text	**May Include Graphic Images**	**Freestanding Structure or Sign**	**Integrated With or Placed Upon a Required Engineered Transportation Feature**
Transportation Art	No	Yes	Freestanding or Integrated	Freestanding or Integrated
Community Identification	Yes	Yes	No	Yes
Gateway Monuments	Yes	Yes	Yes	No

Statutory Authority

Authority for Caltrans to control encroachments within the State highway right-of-way and thus transportation art, is contained in the *California Streets and Highways Code*, Chapter 3.

Intellectual Property Rights - Copyright Ownership of Transportation Art

Transportation art located within Caltrans' right-of-way is a benefit to the people of California and will become property of the State. Prior to the installation or placement of the approved transportation art, the artist(s) and public agency must provide Caltrans with an executed and notarized copyright assignment and transfer agreement containing terms and conditions approved by Caltrans. The copyright assignment and transfer agreement assigns, transfers, and conveys the artist's entire rights, title and interest in and to the approved transportation art to Caltrans, including but not limited to, the artist's common law and federal law copyright ownership rights to the approved transportation art.

Artist Disclaimer Statement

The artist must place a disclaimer statement in a conspicuous manner on or in close proximity to the artwork. The disclaimer statement must state that the contents of the artwork solely reflect the views of the artist and do not reflect the official views or policies of Caltrans or the Federal Highway Administration.

Sponsor Recognition

Transportation art may include sponsor recognition such as the name, identifying logo, or symbol of the artist, public agency, and/or financial sponsor(s). The sponsor recognition should be unobtrusive, discreet, and not appear to be an integral part of the artwork. The sponsor recognition may be placed on or adjacent to the transportation art and will not be considered to be "text." Caltrans retains sole discretion for determining the appropriate size, content, colors, and other elements of this recognition. Sponsor recognition must be provided and maintained by the public agency.

Sponsor Recognition Disclaimer Statement

The sponsor recognition must include a disclaimer statement that Caltrans does not endorse the sponsor's products and/or services and that the sponsor's name only appear as a reference as the source of sponsorship. This disclaimer must be placed in a conspicuous manner adjacent to the sponsor's name.

Placement

Transportation art may be either freestanding, or placed upon/integrated with a required engineered transportation feature such as a noise barrier, retaining wall, bridge, bridge abutment, bridge railing, or paved slope.

Freestanding transportation art within the State right-of-way must be placed as far as practical from the traveled way or edge of roadway, while still remaining visible. The proposed location for all transportation art must be reviewed by Caltrans for safety and environmental considerations prior to approval.

Transportation art that is freestanding is considered to be a discretionary fixed object. See *Highway Design Manual* Topic 309 – Clearances, for the minimum required horizontal clearances for transportation art.

Transportation Art Requirements

Proposed transportation art must:

- include graphics or sculptural artwork that expresses unique attributes of a community's history, resources, or character.
- be a freestanding structure or sign, or integrated with or placed upon a required engineered transportation feature.
- not make use of or simulate colors or combinations of colors usually reserved for official traffic control devices described in the *California Manual on Uniform Traffic Control Devices*.
- not create a distraction to transportation system users. For example, it should be large enough to interpret at highway speed, but not be so large that it demands attention from the motorist.
- not include illumination (such as blinking or intermittent lights) that impairs the vision of or distracts transportation system users. Other lighting may be permitted. Lighting may be allowed on existing structures only when approved by Headquarters Division of Maintenance-Structure Maintenance and Investigations.

- be located where required maintenance can be safely performed as specified in the encroachment permit, the maintenance agreement, and in conformance with Caltrans' procedures.
- be appropriate to its proposed setting.
- be in proper scale with its surroundings.
- be composed of materials that are durable for the projected lifespan.
- be fully funded for design, installation, maintenance, restoration, and removal by others for its projected lifespan.
- conform to provisions of the *California Outdoor Advertising Act*.
- not imitate, obscure, or interfere with traffic control devices.
- not interfere with airspace above the roadway.
- not be placed within State highway right-of-way upon trees, rocks or other natural features.
- not adversely affect existing structures, drainage patterns or stormwater runoff quality, landscaping, natural vegetation.
- not include reflective or glaring surface finishes.
- not include moving elements (kinetic art) or simulate movement.
- not restrict sight distance.
- not display symbols or icons such as flags, logos, or commercial symbols, except as allowed in Sub-article "Intellectual Property Rights - Copyright Ownership of Transportation Art."
- not display text that makes special interest, private, religious, or political statements, or includes business names, trade names, jingles, or slogans.
- be designed to minimize ongoing maintenance needs. Caltrans-approved protective graffiti coatings may be required if appropriate.
- be consistent with Headquarters Division of Maintenance-Structure Maintenance and Investigations inspection requirements, including the following:
  - Paint used on structures should not fill or obscure cracks. Latex or other flexible type paints may be used on concrete structures only with written permission from the Headquarters Division of Maintenance-Structure Maintenance and Investigations.
  - Painting of steel structures will only be permitted with written permission from the Headquarters Division of Maintenance-Structure Maintenance and Investigations.
  - Painted art on concrete structures should avoid load-carrying, stress-bearing structural members, including, but not limited to bridge girders, soffits, columns, and piers. Wing walls and abutments are preferred locations for painted art.
  - Artwork must not impair the necessary inspection of bridges, retaining walls, and other structures.

- To facilitate Caltrans' inspection access to structures, mural art may be placed on removable panels.
- Chipping, blasting, or in any way modifying existing concrete surfaces is prohibited, unless required for inspection by Headquarters Division of Maintenance-Structure Maintenance and Investigations.

Additional guidance for placing transportation art on highway bridge structures is available from Headquarters Division of Engineering Services-Structure Design, Office of Transportation Architecture.

ARTICLE 2 Responsibilities

Administrative Responsibilities

Headquarters

The Headquarters Division of Design-Landscape Architecture Program Deputy Division Chief:

- appoints a Headquarters Transportation Art Coordinator.
- maintains and disseminates policy and procedures for the Transportation Art Program.
- monitors district performance and provides quality assurance of program guidelines.
- reviews proposals for conformance with policy and for statewide consistency.

The Division of Traffic Operations, Office of Encroachment Permits & Engineering Support Chief:

- develops forms and special provisions for the Transportation Art Program.
- maintains and clarifies encroachment permit policies and procedures.

The Division of Engineering Services-Structure Design, Office of Transportation Architecture and Division of Maintenance-Structure Maintenance and Investigations:

- maintain guidelines for structural and architectural design and structure maintenance to facilitate the placement of transportation art on highway bridge structures.
- approve any exceptions to the guidelines for structural and architectural design and structure maintenance.

District

The District Director:

- administers the transportation art program in accordance with these guidelines.
- designates a district transportation art coordinator.
- approves qualified final transportation art proposals.

The district transportation art coordinator:

- acts as the single focal point to qualify, process, and evaluate transportation art submittals by public agencies.
- facilitates and coordinates the placement of authorized transportation art within the transportation right-of-way.
- notifies the Headquarters Transportation Art Coordinator of permit approval and construction completion.
- prepares annual summary reports and submits them to the Headquarters Division of Design-Landscape Architecture Program Deputy Division Chief.
- reviews transportation art proposals for:
  - documented community acceptance.
  - compliance with State and federal regulations and Caltrans' guidance.
  - adequately planned and resourced maintenance of the transportation art by the public agency.
  - safety and liability issues for Caltrans, the public agency, and the public.
- submits final transportation art proposals to the Headquarters Division of Design-Landscape Architecture Program Deputy Division Chief.

The district permit engineer:

- forwards the qualified final submittal to the Headquarters Division of Design, Office of Project Support, to obtain written approval from FHWA if the proposal is on an Interstate highway.
- ensures a maintenance agreement has been executed prior to issuance of the encroachment permit.
- ensures a copyright assignment and transfer agreement is executed prior to issuance of the encroachment permit.
- issues the encroachment permit to the public agency.
- monitors and enforces permit and maintenance agreement requirements for the maintenance, restoration, or removal of transportation art.
- inspects the transportation art construction.

- notifies the district transportation art coordinator of permit approval and construction completion.

Financial Responsibilities

Transportation art is solely funded by the public agency. All costs for proposed transportation art design, construction, access for maintenance, maintenance, and removal, if required, shall be the responsibility of the public agency and stipulated in detail in the preliminary and final transportation art submittals.

Caltrans assumes the administrative costs associated with reviewing transportation art proposals, and developing, issuing, and monitoring the encroachment permit and maintenance agreement for approved transportation art projects. All other costs, including labor, materials, supplies, and traffic control (if required) for design, engineering, testing, construction, installation, maintenance, restoration, and removal of the transportation art shall be the responsibility of the public agency.

Caltrans may require the public agency to provide bonds or other means to ensure maintenance, restoration, and removal of the transportation art.

Maintenance Responsibilities

Transportation art must be kept clean, free of graffiti, and in good repair. The public agency must provide regularly scheduled maintenance as described in the maintenance agreement for its projected lifespan, including graffiti removal and restoration work necessary to maintain the integrity of the transportation art. Graffiti removal shall conform to Caltrans' policies and guidelines, which require prompt removal of offensive messages and timely removal of all other graffiti. Caltrans graffiti removal policy is described in *Deputy Directive DD-39-R1 – Graffiti Prevention and Removal* and Volume 1, Chapter D1 of the *Maintenance Manual*.

A maintenance agreement for the care and upkeep of the transportation art by the public agency must be executed between the public agency and Caltrans. Maintenance shall be performed by the public agency as stipulated in the agreement. Worker access to perform maintenance required by transportation art should be from outside the highway right-of-way whenever possible.

Caltrans will not provide maintenance of transportation art, but may perform maintenance activities in the area, such as litter pickup and other activities associated with normal transportation facility maintenance. Any maintenance activities required

adjacent to the transportation art that are over and above what Caltrans would normally provide must be described in the encroachment permit, maintenance agreement, or cooperative agreement and identified as a responsibility of the public agency.

If the public agency fails to maintain the transportation art as provided in the maintenance agreement, Caltrans may perform the maintenance at the public agency's expense, or direct the public agency to remove the transportation art at the public agency's expense.

When notified by Caltrans, the public agency shall remove any transportation art that creates a maintenance or operational concern. If the public agency does not remove the transportation art in a timely manner, Caltrans may remove the transportation art and bill the public agency for the costs involved.

Caltrans reserves the right to immediately remove or alter transportation art due to emergency, construction, restoration, or other necessary activities affecting the transportation facility.

ARTICLE 3 Project Development Process

Processing Transportation Art Proposals

A transportation art proposal is typically developed by the public agency (such as the responsible city or county, tribal government, or non-federally-recognized tribe) that has jurisdiction over the area where the transportation art will be placed. Public agencies should contact the Caltrans district transportation art coordinator to develop a qualified final proposal for submittal to the District Director for approval, and then processed as an encroachment permit.

Transportation art included as part of a capital improvement project, will be reviewed and approved through Caltrans project development process, and as directed within these guidelines.

Preliminary Proposal Review

Public agencies seeking approval of transportation art must first submit a preliminary proposal to the Caltrans district transportation art coordinator. The coordinator reviews the preliminary proposal for safety, aesthetics, maintenance accessibility, message, and proper fit within the context of the transportation corridor. The

preliminary proposal will be returned to the public agency for revision if Caltrans recommends changes at any time before final approval.

Preliminary proposals must consist of plans, specifications, artist renderings, and other necessary documents prepared by a licensed landscape architect, architect, professional engineer, or artist, as appropriate and include:

- A written evaluation of alternate locations outside the highway right-of-way for proposed freestanding transportation art
- A resumé of the artist's work and background
- A full description of the proposed transportation art, including a model or scaled plans, elevations, sections and details necessary to convey location, view from all sides, materials, and construction or installation methods. Caltrans may furnish site data as required
- Plans and details stamped by a licensed engineer if the proposal includes freestanding art, new structures, or modification of existing Caltrans' structures
- Proposed location, showing existing topography, and dimensions and offsets to right-of-way lines, edge of pavement, centerline, and the clear recovery zone
- Proposed color scheme, paint or stain materials, or protective coatings
- Required environmental documentation
- Material safety data sheet for proposed materials
- Proposed lighting
- Specifications
- Proposed traffic control plans and specifications
- Proposed cost estimate
- Proposed construction schedule
- Projected lifespan
- Proposed maintenance access plan
- Preliminary maintenance agreement, including maintenance schedule

After receiving the preliminary proposal, the district transportation art coordinator reviews the submittal for compliance with safety requirements (clear recovery zone setback, visibility, maintenance access, and highway operations), and compatibility with transportation corridor character and aesthetics. The district transportation art coordinator may advise the public agency of constraints or other concerns, solicit additional documentation or exhibits, or may request changes to the scope of work. The public agency must address all comments, make appropriate revisions, and

resubmit the proposal to the district transportation art coordinator for review as a qualified preliminary proposal.

Upon acceptance of a qualified preliminary proposal, the district transportation art coordinator circulates the proposal for evaluation of potential conflicts with gateway monuments and community identification. District design, traffic operations, environmental, maintenance, right-of-way, and other appropriate functional units also evaluate the preliminary proposal and identify concerns or provide suggestions for compliance with Caltrans' policies. Proposals that involve freestanding art, new structures, or modification of existing Caltrans' structures must also be circulated to Headquarters Division of Maintenance-Structure Maintenance and Investigations, and/or Headquarters Division of Engineering Services-Structure Design, Office of Transportation Architecture.

The district transportation art coordinator also determines whether preparation of a permit engineering evaluation report (PEER) will be required, taking into consideration highway operation, maintenance, and tort liability.

Upon completion of district circulation, the district transportation art coordinator provides review comments to the public agency and asks them to make the required revisions. After completion of revisions, the package is resubmitted by the public agency to the district transportation art coordinator as a qualified final proposal. The qualified final proposal should then be processed by the public agency for community review.

Community Review and Public Agency Resolution

Prior to final proposal review by Caltrans, the public agency must document local support for the proposal. Working with the district transportation art coordinator, the public agency will determine an appropriate method of community review, ranging from a signed petition to conducting noticed public meetings. The public agency will secure and document community acceptance, ensuring that those most affected have been provided the opportunity to express either support or opposition to the final proposal. After securing public acceptance, the public agency shall issue an adopted resolution or other official document recommending approval of the proposed design of the transportation art and requesting installation within the highway right-of-way. This resolution or document must describe the public agency's:

- jurisdiction over the area of the project site.

- approval of the transportation art.
- funding responsibility.
- commitment to regular scheduled maintenance of the transportation art throughout its projected lifespan, including timely graffiti removal, restoration, and removal of the transportation art as required.
- proposed schedule for commencing and completing project installation.

Final Proposal Review

The district transportation art coordinator will review the qualified final proposal, including the maintenance agreement, and documentation of local support to verify that all previous comments have been addressed and will forward the proposal to the District Director for approval.

District Director Review

The District Director will review the qualified final proposal for community acceptance, compliance with State and federal regulations, and Caltrans' guidance, adequacy of maintenance resources, and safety and liability issues for Caltrans, the public agency, and the public.

District Director approval of a transportation art proposal is made with due consideration to safety (location, potential for motorist distraction, and accessibility for maintenance), aesthetics, community support, and maintainability. Once approved, no changes shall be made without prior written approval of the District Director.

After District Director approval, the district transportation art coordinator advises the public agency to submit the proposal to the district permit engineer for processing as an encroachment permit.

Encroachment Permit Process

Approved transportation art proposals are processed as an encroachment permit as per the *Encroachment Permits Manual*, Section 500.2 and Appendix B.

After Construction

After construction is complete, the district transportation art coordinator sends a copy of the transportation art proposal, approval documents, permit, and as-built information to the Headquarters Transportation Art Coordinator.

SECTION 10 Community Identification

ARTICLE 1 General Procedure

Caltrans recognizes the effects of transportation facilities on local communities and encourages transportation system improvements that reflect community needs and its values.

Caltrans supports enriching the cultural and visual environment of the transportation system and local communities by facilitating the placement of community identification within the State highway right-of-way.

Community identification includes visual images, graphics, sculptural artwork, or text that is placed on a required engineering feature (such as a noise barrier, retaining wall, bridge, bridge abutment, bridge rail, or slope paving) that expresses unique attributes of a community's identity, history, resources, character, or other defining characteristics.

Community identification is proposed, provided, installed, maintained, and removed (or restored) by the public agency representing the area in which the community identification will be installed. The public agency may be a city, county, tribal government or non-federally-recognized tribe.

Community identification, transportation art, and gateway monuments compare and contrast as follows:

Figure 29-5 Transportation Art, Community Identification, and Gateway Monuments

	May Include Text	**May Include Graphic Images**	**Freestanding Structure or Sign**	**Integrated With or Placed Upon a Required Engineered Transportation Feature**
Transportation Art	No	Yes	Freestanding or Integrated	Freestanding or Integrated
Community Identification	Yes	Yes	No	Yes
Gateway Monuments	Yes	Yes	Yes	No

Community Identification Requirements

To avoid distraction and minimize visual clutter, only a single community identification or gateway monument will be permitted per State highway approach in each direction into a local city, county, or community. Existing community identification or gateway monuments located within 660 feet of the State highway on either private or public property will be considered the single allowed feature, and no additional community identification or gateway monument will be approved.

Proposed community identification must:

- incorporate a name, logo, graphic, seal, or slogan that has been historically associated with the community.
- be integrated with, or placed upon a required engineered transportation feature.
- not be a freestanding structure or sign.
- not make use of or simulate colors or combinations of colors usually reserved for official traffic control devices described in the *California Manual on Uniform Traffic Control Devices*.
- not create a distraction to transportation system users. For example, it should be large enough to interpret at highway speed, but not be so large that it demands attention from the motorist.
- not include illumination (such as blinking or intermittent lights) that impairs the vision of, or distracts transportation system users. Other lighting may be permitted. Lighting may be allowed on existing structures only when approved by Headquarters Division of Maintenance-Structure Maintenance and Investigations.
- be located where the required maintenance can be safely performed as specified in the encroachment permit, the maintenance agreement, and in conformance with Caltrans' procedures.
- be appropriate to its proposed setting.
- be in proper scale with its surroundings.
- be composed of materials that are durable for the projected lifespan.
- be fully funded for design, installation, maintenance, restoration, and removal by others for its projected lifespan.
- conform to provisions of the *California Outdoor Advertising Act*.
- not imitate, obscure, or interfere with traffic control devices.
- not interfere with airspace above the roadway.
- not be placed within State highway right-of-way upon trees, rocks or other natural features.

- not adversely affect existing structures, drainage patterns or stormwater runoff quality, landscaping, or natural vegetation.
- not include reflective or glaring surface finishes.
- not include moving elements (kinetic art) or simulate movement.
- not restrict sight distance.
- not display symbols or icons such as flags, logos, or commercial symbols.
- not display text that makes special interest, private, religious, or political statements, or includes business names, trade names, jingles, or slogans.
- be designed to minimize ongoing maintenance needs. Caltrans-approved protective graffiti coatings may be required if appropriate.
- be consistent with Headquarters Division of Maintenance-Structure Maintenance and Investigations inspection requirements, including the following:
  - Paint used on structures should not fill or obscure cracks. Latex or other flexible type paints may be used on concrete structures only with written permission from the Headquarters Division of Maintenance-Structure Maintenance and Investigations.
  - Painting of steel structures will only be permitted with written permission from the Headquarters Division of Maintenance-Structure Maintenance and Investigations.
  - Community identification on concrete structures should avoid load-carrying, stress-bearing structural members, including, but not limited to bridge girders, soffits, columns, and piers.
  - Community identification must not impair the necessary inspection of bridges, retaining walls, and other structures.
  - To facilitate Caltrans' inspection access to structures, community identification may be placed on removable panels if not an integral part of a structure.
  - Chipping, blasting, or in any way modifying existing concrete surfaces is prohibited, unless required for inspection by Headquarters Division of Maintenance-Structure Maintenance and Investigations.
- Additional guidance for placing community identification on highway bridge structures is available from Headquarters Division of Engineering Services-Structure Design, Office of Transportation Architecture

ARTICLE 2 Responsibilities

Administrative Responsibilities

Headquarters

The Headquarters Division of Design-Landscape Architecture Program Deputy Division Chief:

- appoints a Headquarters Community Identification Coordinator.
- maintains and disseminates policy and procedures for community identification.
- monitors district performance and provides quality assurance of program guidelines.
- reviews proposals for conformance with policy and for statewide consistency.
- processes FHWA review of proposals located on an Interstate highway.

The Division of Traffic Operations, Office of Encroachment Permits & Engineering Support Chief:

- develops forms and special provisions for the Community Identification Program.
- maintains and clarifies encroachment permit policies and procedures.

The Division of Engineering Services-Structure Design, Office of Transportation Architecture and Division of Maintenance-Structure Maintenance and Investigations:

- maintain guidelines for structural and architectural design and structures maintenance to facilitate the placement of community identification on highway bridge structures.
- approve any exceptions to the guidelines for structural and architectural design and structure maintenance.

District

The District Director:

- administers the community identification program in accordance with these guidelines.
- designates a district community identification coordinator.
- approves qualified final community identification proposals.

The district community identification coordinator:

- acts as the single focal point to qualify, process, and evaluate community identification submittals by public agencies.
- facilitates and coordinates the placement of authorized community identification within the transportation right-of-way.
- notifies the Headquarters Community Identification Coordinator of community identifications permit approval and construction completion.
- prepares annual summary reports and submits to the Headquarters Division of Design-Landscape Architecture Program Deputy Division Chief.
- reviews community identification proposals for:
  - documented community acceptance.
  - compliance with State and federal regulations and Caltrans' guidance.
  - adequately planned and resourced maintenance of the community identification by the public agency.
  - safety and liability issues for Caltrans, the public agency, and the public.
- submits final community identification proposals to the Headquarters Division of Design-Landscape Architecture Program Deputy Division Chief.

The district permit engineer:

- forwards the qualified final submittal to the Headquarters Division of Design, Office of Project Support, to obtain written approval from FHWA, if the proposal is on an Interstate highway.
- ensures a maintenance agreement has been executed prior to issuance of the encroachment permit.
- issues the encroachment permit to the public agency.
- monitors and enforces permit and maintenance agreement requirements for the maintenance, restoration, or removal of community identification.
- inspects the community identification construction.
- notifies the district community identification coordinator of permit approval and construction completion.

Financial Responsibilities

Community identification is solely funded by the public agency. All costs for community identification design, construction, access for maintenance, maintenance, and removal, if required, shall be the responsibility of the public agency and stipulated in detail in the preliminary and final community identification submittals.

When the work is proposed by a public agency, Caltrans will allocate project resources for the design and integration of community identification as would normally be allocated for the design of standard aesthetic treatments integrated with engineered highway features. Resources needed for design, implementation, construction (including traffic control, if required), and maintenance of community identification that are over and above what Caltrans would otherwise allocate will be negotiated with the public agency and documented in the encroachment permit or cooperative agreement.

When community identification proposed by a public agency is to be part of a Caltrans roadway project, Caltrans will allocate resources for the administrative costs associated with review and determination of appropriateness of proposed community identification as part of the transportation corridor's existing and proposed engineered highway features.

Caltrans assumes the administrative costs associated with reviewing community identification proposals, and developing, issuing, and monitoring the encroachment permit and maintenance agreement for approved community identification projects. All other costs, including labor, materials, supplies, and traffic control (if required) for design, engineering, testing, construction, installation, maintenance, restoration, and removal of the community identification shall be the responsibility of the public agency.

Caltrans may require the public agency provide bonds or other means to ensure maintenance, restoration, and removal of the community identification.

Maintenance Responsibilities

Community identification must be kept clean, free of graffiti, and in good repair. The public agency must provide regularly scheduled maintenance as described in the maintenance agreement for its projected lifespan, including graffiti removal and restoration work necessary to maintain the integrity of the community identification. Graffiti removal shall conform to Caltrans' policies and guidelines, which require prompt removal of offensive messages and timely removal of all other graffiti. Caltrans graffiti removal policy is described in *Deputy Directive DD-39-R1 – Graffiti Prevention and Removal* and Volume 1, Chapter D1 of the *Maintenance Manual*.

A maintenance agreement for the care and upkeep of the community identification by the public agency must be executed between the public agency and Caltrans.

Maintenance shall be performed by the public agency as stipulated in the agreement. Worker access to perform maintenance required by community identification should be from outside the highway right-of-way whenever possible.

Caltrans will not provide maintenance of the community identification, but may perform maintenance activities in the area such as litter pickup and other activities associated with normal transportation facility maintenance. Any maintenance activities required adjacent to the community identification that are over and above what Caltrans would normally provide must be described in the encroachment permit, maintenance agreement, or cooperative agreement and identified as a responsibility of the public agency.

If the public agency fails to maintain the community identification as provided in the maintenance agreement, Caltrans may perform the maintenance at the public agency's expense, or direct the public agency to remove the community identification at the public agency's expense.

When notified by Caltrans, the public agency shall remove any community identification that creates a maintenance or operational concern. If the public agency does not remove the community identification in a timely manner, Caltrans may remove the community identification and bill the public agency for the costs involved.

Caltrans reserves the right to immediately remove or alter community identification due to emergency, construction, restoration, or other necessary activities affecting the transportation facility.

ARTICLE 3 Project Development Process

Processing Community Identification Proposals

A community identification proposal is typically developed by the public agency (such as the responsible city or county, tribal government, or non-federally-recognized tribe) that has jurisdiction over the area where the community identification will be placed. Public agencies should contact the Caltrans district community identification coordinator to develop a qualified final proposal for submittal to the District Director for approval, and then processed as an encroachment permit.

Community identification included as part of a capital improvement project, will be reviewed and approved through Caltrans project development process, and as directed within these guidelines.

Preliminary Proposal Review

Public agencies seeking approval of community identification must first submit a preliminary proposal to the Caltrans district community identification coordinator. The coordinator reviews the preliminary proposal for safety, aesthetics, maintenance accessibility, message, and proper fit within the context of the transportation corridor. The preliminary proposal will be returned to the public agency for revision if Caltrans recommends changes at any time before final approval.

Preliminary proposals must consist of plans, specifications and other necessary documents prepared by a licensed landscape architect, architect, or professional engineer and include:

- A full description of the proposed community identification, including a model or scaled plans, elevations, sections and details necessary to convey location, view from all sides, materials, and construction or installation methods. Caltrans may furnish site data as required
- Plans and details stamped by a licensed engineer if the proposal includes new structures or modification of existing Caltrans' structures
- Proposed location, showing existing topography, and dimensions and offsets to right-of-way lines, edge of pavement, centerline, and the clear recovery zone
- Proposed color scheme, paint or stain materials, or protective coatings
- Required environmental documentation
- Material safety data sheet for proposed materials
- Proposed message to be communicated
- Proposed lighting
- Specifications
- Proposed traffic control plans and specifications
- Proposed cost estimate
- Proposed construction schedule
- Projected lifespan
- Proposed maintenance access plan
- Preliminary maintenance agreement, including maintenance schedule

After receiving the preliminary proposal, the district community identification coordinator reviews the submittal for compliance with safety requirements, visibility, maintenance access, and highway operations), and compatibility with transportation corridor character and aesthetics. The district community identification coordinator may advise the public agency of constraints or other concerns, solicit additional documentation or exhibits, or may request changes to the scope of work. The public agency must address all comments, make appropriate revisions, and resubmit the proposal to the district community identification coordinator for review as a qualified preliminary proposal.

Upon acceptance of a qualified preliminary proposal, the district community identification coordinator circulates the proposal for evaluation of potential conflicts with gateway monuments and transportation art. District design, traffic operations, environmental, maintenance, right-of-way, and other appropriate functional units also evaluate the preliminary proposal and identify concerns or provide suggestions for compliance with Caltrans' policies. Proposals that involve new structures or modification of existing Caltrans' structures must also be circulated to Headquarters Division of Maintenance-Structure Maintenance and Investigations, and/or Headquarters Division of Engineering Services-Structure Design, Office of Transportation Architecture.

The district community identification coordinator also determines whether preparation of a PEER will be required, taking into consideration highway operation, maintenance, and tort liability.

Upon completion of district circulation, the district community identification coordinator provides review comments to the public agency and asks them to make the required revisions. After completion of revisions, the package is resubmitted by the public agency to the district community identification coordinator as a qualified final proposal. The qualified final proposal should then be processed by the public agency for community review.

Community Review and Public Agency Resolution

Prior to final proposal review by Caltrans, the public agency must document local support for the proposal. Working with the district community identification coordinator, the public agency will determine an appropriate method of community review, ranging from a signed petition to conducting noticed public meetings. The public agency will secure and document community acceptance, ensuring that those

most affected have been provided the opportunity to express either support or opposition to the final proposal. After securing public acceptance, the public agency shall issue an adopted resolution or other official document recommending approval of the proposed design of the community identification and requesting installation within the highway right-of-way. This resolution or document must describe the public agency's:

- jurisdiction over the area of the project site.
- approval of the community identification.
- funding responsibility.
- commitment to regular scheduled maintenance of the community identification throughout its projected lifespan, including timely graffiti removal, restoration, and removal of the community identification as required.
- proposed schedule for commencing and completing project installation.

Final Proposal Review

The district community identification coordinator will review the qualified final proposal, including the maintenance agreement, and documentation of local support to verify that all previous comments have been addressed and will forward the proposal to the District Director for approval.

District Director Review

The District Director will review the qualified final proposal for community acceptance, compliance with State and federal regulations, and Caltrans' guidance, adequacy of maintenance resources, and safety and liability issues for Caltrans, the public agency, and the public.

District Director approval of a community identification proposal is made with due consideration to safety (location, potential for motorist distraction, and accessibility for maintenance), aesthetics, community support, and maintainability. Once approved, no changes shall be made without prior written approval of the District Director.

After District Director approval, the district community identification coordinator advises the public agency to submit the proposal to the district permit engineer for processing as an encroachment permit.

Encroachment Permit Process

Approved community identification proposals are processed as an encroachment permit as per the *Encroachment Permits Manual*, Section 500.8 and Appendix B.

After Construction

After construction is complete, the district community identification coordinator sends a copy of the community identification proposal, approval documents, permit, and as-built information to the Headquarters Community Identification Coordinator.

SECTION 11 Gateway Monuments

ARTICLE 1 General Procedure

Cities or counties often desire new and existing transportation facilities provide identification and a favorable image of the communities in which they are located. Caltrans encourages and promotes enrichment of the cultural and visual environment for transportation system users and local communities by facilitating and coordinating the integration of gateway monuments within the State highway right-of-way.

Gateway monuments are any freestanding structure or sign, non-integral or non-required highway feature that communicate the name of a local city, county or community. A gateway monument may include the officially adopted seal or slogan of the local city, county, or community.

Gateway monuments are proposed, provided, installed, maintained and removed (or restored) by the public agency representing the area in which the gateway monument will be installed. The public agency may be a city, county, tribal government or non-federally-recognized tribe.

Gateway monuments, transportation art, and community identification enhancements compare and contrast as follows:

Figure 29-6 Transportation Art, Community Identification, and Gateway Monuments

	May Include Text	**May Include Graphic Images**	**Freestanding Structure or Sign**	**Integrated With or Placed Upon a Required Engineered Transportation Feature**
Transportation Art	No	Yes	Freestanding or Integrated	Freestanding or Integrated
Community Identification	Yes	Yes	No	Yes
Gateway Monuments	Yes	Yes	Yes	No

Statutory Authority

Authority for Caltrans to control encroachments within the State highway right-of-way, and thus gateway monuments, is contained in the *California Streets and Highways Code*, Chapter 3.

Placement

Gateway monuments within the State right-of-way must be placed as far as practical from the traveled way or edge of roadway, while still remaining visible. The proposed location for all gateway monuments must be reviewed by Caltrans for safety and environmental considerations prior to approval.

Gateway monuments are considered to be a discretionary fixed object. See *Highway Design Manual*, Topic 309 – Clearances, for the minimum required horizontal clearances for gateway monuments.

Gateway Monument Requirements

To avoid distraction and minimize visual clutter, only a single community identification or gateway monument will be permitted per State highway approach in each direction into a local city, county, or community. Existing community identification or gateway monuments located within 660 feet of the State highway on either private or public property will be considered to be the single allowed feature, and no additional community identification or gateway monument will be approved.

Before submitting a proposal to locate a gateway monument within the State highway right-of-way, the public agency must consider and document other feasible alternatives including, but not limited to:

- locating the gateway monument outside of the operational highway right-of-way.
- providing community identification on existing or proposed engineering highway features in lieu of a gateway monument.
- providing aesthetic treatment on an existing or proposed transportation facility in lieu of a gateway monument.
- use of existing or natural topographic features in the placement of the gateway monument.

Other improvements may be considered in conjunction with the gateway monument proposal. Any improvements over and above what Caltrans would otherwise fund,

install, construct, or maintain, will be the responsibility of the public agency. Caltrans will collaborate with the public agency for appropriateness of the gateway monument proposal in context with existing, proposed, and future improvements.

Caltrans retains sole discretion for determining all design elements of a gateway monument, including location, appropriate size, colors, and content.

Proposed gateway monuments must:

- incorporate a city, county or community name, logo, graphic, seal, or slogan that has been associated historically with the area.
- be a freestanding structure or sign.
- not be integrated with, or placed upon a required engineered transportation feature.
- not make use of or simulate colors or combinations of colors usually reserved for official traffic control devices described in the *California Manual on Uniform Traffic Control Devices*.
- not create a distraction to transportation system users. For example, it should be large enough to interpret at highway speed, but not be so large that it demands attention from the motorist.
- not include illumination (such as blinking or intermittent lights) that impairs the vision of, or distracts transportation system users. Other lighting may be permitted. Lighting may be allowed on existing structures only when approved by Headquarters Division of Maintenance-Structure Maintenance and Investigations.
- be located where required maintenance can be safely performed as specified in the encroachment permit, the maintenance agreement, and in conformance with Caltrans' procedures.
- be appropriate to its proposed setting.
- be a proper size and in scale with its surroundings. The maximum size shall fit within 353 cubic feet. The width shall not exceed 20 feet and the height shall not exceed 18 feet above existing grade
- be composed of materials that are durable for the projected lifespan.
- be fully funded for design, installation, maintenance, restoration, and removal by others for its projected lifespan.
- conform to provisions of the *California Outdoor Advertising Act* .
- not imitate, obscure, or interfere with traffic control devices.
- not interfere with airspace above the roadway.
- not be placed within State highway right-of-way upon trees, rocks or other natural features.

- not adversely affect existing structures, drainage patterns or stormwater runoff quality, landscaping or natural vegetation.
- not include reflective or glaring surface finishes.
- not include moving elements (kinetic art) or simulate movement.
- not restrict sight distance.
- not display symbols or icons such as flags, logos, or commercial symbols.
- not display text that makes special interest, private, religious, or political statements, or includes business names, trade names, jingles, or slogans.
- be designed to minimize ongoing maintenance needs. Caltrans-approved protective graffiti coatings may be required if appropriate.
- not display telephone numbers, street addresses, or internet addresses.
- not require the removal of trees or other vegetation for visibility, or harm trees during construction. Pruning of tree branches or roots, and removal of shrubs should be avoided, and will be allowed only with written approval of the district landscape architect.
- not negatively impact existing highway features, including existing signs, irrigation systems, necessary drainage patterns, and facilities.
- not protrude or span over travel lanes or roadbed.

ARTICLE 2 Responsibilities

Administrative Responsibilities

Headquarters

The Headquarters Division of Design-Landscape Architecture Program Deputy Division Chief:

- appoints a Headquarters Gateway Monument Coordinator.
- maintains and disseminates policies and procedures for gateway monuments.
- formulates and manages a statewide inventory of gateway monument proposals.
- monitors district performance and provides quality assurance of program guidelines.
- reviews proposals for conformance with policy and for statewide consistency.
- processes FHWA review of proposals located on an Interstate highway.

The Division of Traffic Operations, Office of Encroachment Permits & Engineering Support Chief:

- develops forms and special provisions for the Gateway Monument Program.

- maintains and clarifies encroachment permit policies and procedures.

District

The District Director:

- administers the Gateway Monument Program in accordance with these guidelines.
- designates a district gateway monument coordinator.
- approves qualified final gateway monument proposals.

The district gateway monument coordinator:

- manages the Gateway Monument Program
- acts as the single focal point to qualify, process, and evaluate gateway monument submittals by public agencies.
- facilitates and coordinates the placement of authorized gateway monuments within the transportation right-of-way.
- notifies the Headquarters Gateway Monument Coordinator of gateway monument permit approval and construction completion.
- prepares annual summary reports and submits to the Headquarters Division of Design-Landscape Architecture Program Deputy Division Chief.
- reviews gateway monument proposals for:
  - documented community acceptance.
  - compliance with State and federal regulations and Caltrans' guidance.
  - adequately planned and resourced maintenance of the gateway monuments by the public agency.
  - safety and liability issues for Caltrans, the public agency, and the public.
- submits final gateway monument proposals to the Headquarters Division of Design-Landscape Architecture Program Deputy Division Chief.

The district permit engineer:

- forwards the qualified final submittal to the Headquarters Division of Design, Office of Project Support, to obtain written approval from FHWA, if the proposal is on an Interstate highway.
- ensures a maintenance agreement has been executed prior to issuance of the encroachment permit.
- issues the encroachment permit to the public agency.
- monitors and enforces permit and maintenance agreement requirements for the maintenance, restoration, or removal of gateway monument.

- inspects the gateway monument construction.
- notifies the district gateway monument coordinator of permit approval and construction completion.

Financial Responsibilities

Gateway monuments are solely funded by a public agency. All costs for proposed gateway monument design, construction, access for maintenance, maintenance, and removal, if required, shall be the responsibility of the public agency and stipulated in detail in the preliminary and final gateway monument submittals.

Necessary resources for design, implementation, construction or maintenance of gateway monuments will be the responsibility of the public agency. A cooperative agreement between Caltrans and the public agency will document any such negotiated agreements.

Caltrans assumes the administrative costs associated with reviewing gateway monument proposals, and developing, issuing, and monitoring the encroachment permit and maintenance agreement for approved gateway monument projects. All other costs, including labor, materials, supplies, and traffic control (if required) for design, engineering, testing, construction, installation, maintenance, restoration, and removal of the gateway monument shall be the responsibility of the public agency.

Caltrans may require the public agency provide bonds or other means to ensure maintenance, restoration, and removal of the gateway monument.

Maintenance Responsibilities

Gateway monuments must be kept clean, free of graffiti, and in good repair. The public agency must provide regularly scheduled maintenance, as described in the maintenance agreement, for its projected lifespan, including graffiti removal and restoration work necessary to maintain the integrity of the approved gateway monument. Graffiti removal shall conform to Caltrans' policies and guidelines, which require prompt removal of offensive messages and timely removal of all other graffiti. Caltrans graffiti removal policy is described in *Deputy Directive DD-39-R1 – Graffiti Prevention and Removal* and Volume 1, Chapter D1 of the *Maintenance Manual*.

A maintenance agreement for the care and upkeep of the gateway monument by the public agency must be executed between the public agency and Caltrans.

Maintenance shall be performed by the public agency as stipulated in the agreement. Worker access to perform maintenance required by gateway monuments should be from outside the highway right-of-way whenever possible.

Caltrans will not provide maintenance of the gateway monument, but may perform maintenance activities in the area such as litter pickup and other activities associated with normal transportation facility maintenance. Any maintenance activities required adjacent to the gateway monument that are over and above what Caltrans would normally provide must be described in the encroachment permit, maintenance agreement, or cooperative agreement and identified as a responsibility of the public agency.

If the public agency fails to maintain the gateway monument as provided in the maintenance agreement, Caltrans may perform the maintenance at the public agency's expense, or direct the public agency to remove the gateway monument at the public agency's expense.

When notified by Caltrans, the public agency shall remove any gateway monument that creates a maintenance or operational concern. If the public agency does not remove the gateway monument in a timely manner, Caltrans may remove the gateway monument and bill the public agency for the costs involved.

Caltrans reserves the right to immediately remove or alter gateway monuments due to emergency, construction, restoration, or other necessary activities affecting the transportation facility.

ARTICLE 3 Project Development Process

Processing Gateway Monument Proposals

A gateway monument proposal is typically developed by the public agency (such as the responsible city or county, tribal government, or non-federally-recognized tribe) that has jurisdiction over the area where the gateway monument will be placed. Public agencies should contact the Caltrans district gateway monument coordinator to develop a qualified final proposal for submittal to the District Director for approval, and then processed as an encroachment permit.

Gateway monuments included as part of a capital improvement project, will be reviewed and approved through Caltrans project development process, and as directed within these guidelines.

Preliminary Proposal Review

Public agencies seeking approval of gateway monuments first submit a preliminary proposal to the Caltrans district gateway monument coordinator. The district gateway monument coordinator reviews the preliminary proposal for safety, aesthetics, maintenance accessibility, message, and proper fit within the context of the transportation corridor. The preliminary proposal will be returned to the public agency for revision if Caltrans recommends changes at any time before final approval.

Preliminary proposals must consist of plans, specifications and other necessary documents prepared by a licensed landscape architect, architect, or professional engineer and include:

- A written evaluation of alternate locations outside the highway right-of-way for proposed freestanding gateway monuments
- A full description of the proposed gateway monument, including a model or scaled plans, elevations, sections and details necessary to convey location, view from all sides, materials, and construction or installation methods. Caltrans may furnish site data as required.
- Plans and details stamped by a licensed engineer
- Proposed location, showing existing topography, and dimensions and offsets to right-of-way lines, edge of pavement, centerline, and the clear recovery zone
- Proposed color scheme, paint or stain materials, or protective coatings
- Required environmental documentation
- Material safety data sheet for proposed materials
- Proposed message to be communicated
- Proposed lighting
- Specifications
- Proposed traffic control plans and specifications
- Proposed cost estimate
- Proposed construction schedule
- Projected lifespan
- Proposed maintenance access plan
- Preliminary maintenance agreement, including maintenance schedule

After receiving the preliminary proposal, the district gateway monument coordinator reviews the submittal for compliance with safety requirements (clear recovery zone setback, visibility, maintenance access, and highway operations), and compatibility

with transportation corridor character and aesthetics. The district coordinator may advise the public agency of constraints or other concerns, solicit additional documentation or exhibits, or may request changes to the scope of work. The public agency must address all comments, make appropriate revisions, and resubmit the proposal to the district gateway monument coordinator for review as a qualified preliminary proposal.

Upon acceptance of a qualified preliminary proposal, the district gateway monument coordinator circulates the proposal for evaluation of potential conflicts with transportation art and community identification. District design, traffic operations, environmental, maintenance, right-of-way, and other appropriate functional units also evaluate the preliminary proposal and identify concerns or provide suggestions for compliance with Caltrans' policies.

The district gateway monument coordinator also determines whether preparation of a PEER will be required, taking into consideration highway operation, maintenance, and tort liability.

Upon completion of district circulation, the district gateway monument coordinator provides review comments to the public agency and asks them to make the required revisions. After completion of revisions, the package is resubmitted by the public agency to the district gateway monument coordinator as a qualified final proposal. The qualified final proposal should then be processed by the public agency for community review.

Community Review and Public Agency Resolution

Prior to final proposal review by Caltrans, the public agency must document local support for the proposal. Working with the district gateway monument coordinator, the public agency will determine an appropriate method of community review, ranging from a signed petition to conducting noticed public meetings. The public agency will secure and document community acceptance, ensuring that those most affected have been provided the opportunity to express either support or opposition to the final proposal. After securing public acceptance, the public agency shall issue an adopted resolution or other official document recommending approval of the proposed design of the gateway monument and requesting installation within the highway right-of-way. This resolution or document must describe the public agency's:

- jurisdiction over the area of the project site.

- approval of the gateway monument.
- funding responsibility.
- commitment to regular scheduled maintenance of the gateway monument throughout its projected lifespan, including timely graffiti removal, restoration, and removal of the gateway monument as required.
- proposed schedule for commencing and completing project installation.

Final Proposal Review

The district gateway monument coordinator will review the qualified final proposal, including the maintenance agreement, and documentation of local support to verify that all previous comments have been addressed and will forward the proposal to the District Director for approval.

District Director Review

The District Director will review the qualified final proposal for community acceptance, compliance with State and federal regulations, and Caltrans' guidance, adequacy of maintenance resources, and safety and liability issues for Caltrans, the public agency, and the public.

District Director approval of a gateway monument proposal is made with due consideration to safety (location, potential for motorist distraction, and accessibility for maintenance), aesthetics, community support, and maintainability. Once approved, no changes shall be made without prior written approval of the District Director.

After District Director approval, the gateway monument coordinator advises the public agency to submit the proposal to the district permit engineer for processing as an encroachment permit.

Encroachment Permit Process

Approved gateway monument proposals are processed as an encroachment permit as per the *Encroachment Permits Manual*, Section 500.7 and Appendix B.

After Construction

After construction is complete, the district gateway monument coordinator sends a copy of the gateway monument proposal, approval documents, permit, and as-built information to the Headquarters Landscape Architecture Program Gateway Monument Coordinator.

CHAPTER 30 – Highway Traffic Noise Abatement

Table of Contents

CHAPTER 30 – Highway Traffic Noise Abatement 30-3
Reference Information 30-3
SECTION 1 General Policy 30-3
Scope 30-3
Build at Ultimate Location When Possible 30-4
Noise Abatement Outside the Right-of-Way 30-4
Combine Noise Barrier Projects with Reconstruction Projects 30-7
Cost Effectiveness 30-7
Residents' Desires 30-7
Alternative Designs Required 30-8
Emergency Access Openings 30-8
Use of Plants With Noise Barriers 30-9
Consideration of Environmental Resources 30-9
Value Analysis and Life-Cycle Cost Analysis 30-10
Reasonableness and Feasibility 30-11
SECTION 2 New Highway Construction or Reconstruction 30-14
Policy 30-14
Noise Abatement Criteria 30-14
General 30-14
California Environmental Quality Act Requirements 30-15
Federal Highway Administration 30-15
Approaching the Noise Abatement Criteria 30-16
Design Considerations to Mitigate Noise 30-16
Minimum Attenuation 30-16
Determination of Reasonableness 30-17
Reporting of Proposed Noise Abatement Decisions 30-18
SECTION 3 Retrofit Noise Barriers on Existing Freeways 30-19
General 30-19
Qualifying Areas 30-19
Priority Index for Retrofit Noise Barrier Projects 30-19
Priority Adjustments 30-20
Cost Effectiveness 30-21
Project Costs 30-22
Project Features 30-22

SECTION 4 School Noise Abatement Projects 30-23
Streets and Highways Code Requirements..... 30-23
Available Options 30-23
Agreements with Schools 30-23

Table of Figures

FIGURE 30-1 Noise Barrier Proposed Outside State Highway Right-of-Way (Typical Section) 30-5
FIGURE 30-2 Noise Abatement Criteria..... 30-14

CHAPTER 30 – Highway Traffic Noise Abatement

Reference Information

Some of the references found in this chapter have hyperlinks that connect to Caltrans intranet pages which are not displayable to the general public. Until such time that the specific reference becomes available on the internet, the user will have to contact their district liaison, Caltrans project manager, or the appropriate Headquarters division to inquire about the availability of the reference.

SECTION 1 General Policy

Scope

Caltrans' noise abatement policy addresses the public's sensitivity to highway generated noise and the requirements for considering construction of noise abatement facilities when they are reasonable and feasible. The abatement of highway traffic noise is a design consideration that is required by State and federal statutes and regulations and by Caltrans' policy.

As part of the general environmental review process associated with all projects, project sponsors are required to evaluate if the project could result in substantially increased noise levels (termed "noise impact"); and when "reasonable" and "feasible", consider attenuating this increased noise. Using this policy and procedures, environmental studies may result in recommendations that proposed projects consider noise abatement to protect specific properties, along with preliminary designs for the abatement facilities. The project engineer (PE) should work with the environmental unit in determining those preliminary designs. Later, as project details are developed, it is the responsibility of the PE to determine the feasibility and reasonableness of constructing the noise abatement facility; specifically where noise abatement facilities will be constructed, materials to be used and various other design details. Once these details have been determined, they should be reviewed by the district environmental unit and concurrence obtained. This chapter provides basic guidelines to assist the PE in making the decisions they are responsible for. Specific structural and architectural design features of noise barriers,

as well as other noise abatement facilities, are covered in other Caltrans manuals and the Caltrans *Standard Plans*.

The three basic types of projects involving noise abatement include:

- The construction of new highways or the reconstruction of existing highways (see Chapter 2 – Roles and Responsibilities).
- The construction of noise abatement features to retrofit existing freeways through residential areas.
- The construction of noise abatement features to retrofit existing freeways to reduce the level of freeway traffic noise that intrudes into public and privately owned primary and secondary schools. School noise abatement projects may be proposed as an element of the State Highway Operation and Protection Program (SHOPP).

Build at Ultimate Location When Possible

Noise barriers should be constructed at the ultimate location to accommodate a full standard facility or approved permanent nonstandard facility, meeting the transportation concept for number of lanes, when reasonable and feasible. A wall must not be constructed where planned future construction would limit its useful life to less than 15 years. If the route concept indicates the freeway will be widened, and the noise barriers are currently to be constructed adjacent to the shoulder, the design should provide for salvage in the future.

Noise Abatement Outside the Right-of-Way

Noise abatement facilities are normally constructed within the State highway right-of-way. However, under certain conditions it may be appropriate to construct them outside the right-of-way. The following factors should be considered when developing location and strategies for noise abatement facilities.

The topography between the noise source (i.e., freeway traffic) and the noise receptors (i.e., the adjacent residences) or other factors will sometimes not allow a noise barrier to be constructed at a reasonable height or at a feasible location within the right-of-way. Under these conditions, it may be more reasonable and feasible to construct the noise barrier on private property. Conditions which illustrate this are shown in Figure 30-1.

FIGURE 30-1 Noise Barrier Proposed Outside State Highway Right-of-Way (Typical Section)

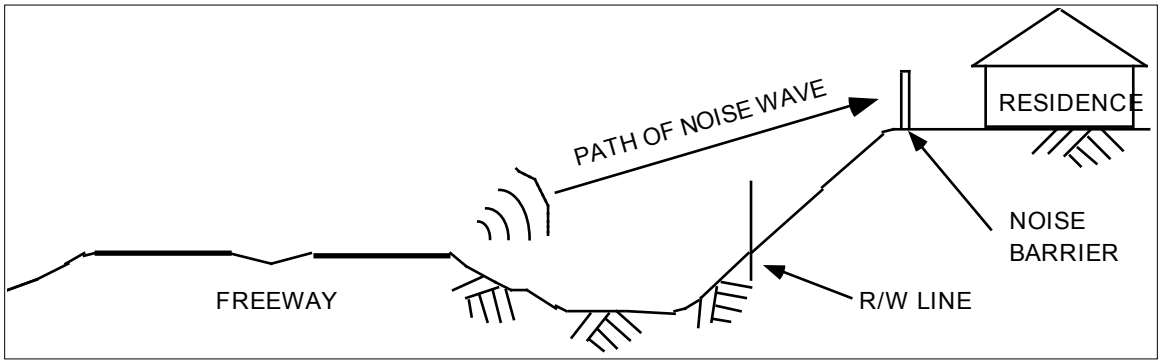

When analysis of traffic noise impacts determines that noise abatement should be considered for properties adjacent to the freeway, and when it is found to be more reasonable and feasible to construct a noise barrier for that abatement outside the State highway right-of-way, such construction may be implemented under the following conditions.

- A determination must be made that all (100 percent) of the affected property owners are supportive of the construction of the proposed noise barriers, their location and the materials to be used for construction.
- Each affected property owner must enter into a contract with Caltrans which specifies that they:
  - Agree to allow Caltrans personnel, representatives and contractors to enter upon their property for purposes of constructing the noise barrier and all other related work.
  - Agree to accept ownership and maintenance responsibility of their respective portion of the noise barrier upon its completion. When responsibility for maintenance is assigned to a property owner, it is done with the understanding that on a federally funded project, the Federal Highway Administration (FHWA) will hold Caltrans responsible for that maintenance.
  - Agree not to remove the noise barrier without full consent of all other affected property owners and Caltrans.
  - Agree to allow Caltrans personnel and representatives to enter upon their property with appropriate prior notification for the purpose of periodic inspection of the noise barrier.
  - Agree that the contract provisions will be a permanent burden upon and a benefit for the property involved. The district right-of-way unit will determine specific wording which, as a minimum, should include these provisions:

  - "The term of this contract shall be a burden and a benefit which runs with the land, and shall inure to the benefit of and be binding upon the successors, assigns or transferees of the property owner."
- All parties to the contract must agree to record the document in the official records of the appropriate county recorder's office.

This policy regarding the possibility of constructing noise barriers outside the right-of-way applies to all State highway projects regardless of funding for those projects.

Another noise abatement strategy which may be considered in rare and unusual cases is to provide noise insulation of the residential units. When this is being considered, the following guidelines must be complied with.

Noise insulation will not normally be provided in private residential dwellings, and may be provided only when severe traffic noise impacts are anticipated and normal abatement measures are physically not feasible or are economically unreasonable. When considering extraordinary abatement measures, it must be demonstrated that the affected activities experience traffic noise impacts to a far greater degree than other similar activities adjacent to highway facilities; i.e., private residential dwelling units will have after-project exterior noise levels of 75 dBA, Leq(h), or more, or the project causes a noise level increase of 30 dBA or more over predicted noise levels if no project was constructed. Noise insulation proposed in accordance with these criteria, on a Federal-aid project, is subject to approval of the FHWA. When noise abatement is provided for public or private properties in line with this policy, an agreement must be entered into with the owner of the subject property which specifies that Caltrans is not responsible for any future costs of operating and/or maintaining the noise abatement improvements; i.e., air conditioning, caulking, etc.

Noise attenuation off the right-of-way is sometimes considered when there is a multistory residential building adjacent to the freeway. A noise barrier constructed at a height which provides attenuation for a single story building will usually not provide attenuation for the upper floors of the multistory building. When designing a noise barrier to provide noise attenuation for a multistory residential building, the noise barrier should not be designed to shield the floors above the ground floor unless the barrier provides at least a 5 dBA reduction for a substantial number of residential units above the ground floor at a reasonable increase in cost.

Combine Noise Barrier Projects with Reconstruction Projects

When a retrofit noise barrier and a reconstruction project are programmed for the same facility in different years, an attempt should be made to reschedule the projects to combine them.

Cost Effectiveness

The cost effectiveness calculation for determining the reasonableness of a noise barrier should include the cost of any necessary widening, retaining walls, drainage, right-of-way, etc., needed to accommodate the noise barrier if those features will not be funded by another programmed project.

Residents' Desires

The views and opinions of the residents living immediately adjacent to the freeway and affected by the traffic noise must be considered in reaching a decision on noise abatement measures. Noise barriers will not be provided if 50 percent or more of those affected residents do not want them. The opinions of these residents should be obtained through public hearings, community meetings or other means as appropriate. [For Federal-aid projects FHWA's regulations require that the views (i.e., opinions) of the affected residents will be a major consideration in reaching a decision on the reasonableness of abatement measures to be provided.]

The opinions of those affected residents should also be considered regarding the height of proposed noise barriers. If the majority of those residents object to the proposed height of the noise barrier, the barrier may be constructed at a lower height under certain conditions. The affected residents should be informed of the proposed height of the noise barrier determined necessary by noise analyses. If they request a lower noise barrier, the shorter height may be constructed if it will still reduce the noise by a minimum of 5 dBA and if the line of sight to the truck exhaust stack height (11.5 feet) is broken.

During preliminary design, consideration must be given to the opinions from the adjacent residents on all relevant factors, such as whether they favor the construction of the proposed noise abatement facilities, heights of the proposed facilities, materials to be used, etc. When the final design proposes significant revisions to the preliminary design, attention must be given to verify that the proposal will still be commensurate with the desires of the impacted residents.

Alternative Designs Required

Highway Design Manual Topic 1102 requires at least two noise barrier design alternatives be included in each project. Alternative materials or methods should be considered in order to increase competition and reduce project costs. Exceptions to this requirement may be approved at the Deputy District Director level. The opinions of the impacted residents should be considered when selecting the alternative materials and methods.

Questions regarding products and methods approved for use on Caltrans projects should be directed to the Headquarters Division of Environmental Analysis. The list of approved products is constantly being expanded to include recycled materials, new concrete designs, and various other materials.

Projects which will be financed by others (tax measures, local agencies, developers, etc.) are not required to include the minimum two design alternatives. However, the advantage of having more than one alternative should be pointed out to the project funder.

Emergency Access Openings

Emergency-service agencies often express the need for emergency personnel access gates to be installed in noise barriers. The gates would be used to provide a means to evacuate trapped or injured persons from the freeway in the event a large-scale earthquake or other type of catastrophic event makes the freeway impassable for emergency vehicles. These gates may be placed in noise barriers when there are no other means of providing access to the freeway. These gates are not intended to be used as an alternate means of emergency access to the adjacent neighborhoods. Access to those areas should be planned and provided for from local streets and roads.

Another need often expressed is for small openings through noise barriers to allow for the passage of fire hoses. Provision of these openings may be allowed when there is no other means of providing fire protection on the freeway.

Local emergency response agencies should be contacted early in the project development process to determine the need for the gates and the fire hose openings. Where possible, the emergency access gates and fire hose openings should be combined. When there is need for access gates to be used by Caltrans maintenance forces, their needs should be combined with the emergency gates when possible.

Use of Plants With Noise Barriers

Where noise barriers are warranted, they should be designed as part of the total transportation facility. This is achieved by coordinating the planning and design of all transportation facility elements; i.e., alignment and profile of the traveled way, drainage features, contour grading and landforms, other structures, existing planting, new planting needs and the required barriers. This concept should be followed throughout the project development process.

Noise barriers, land forms (slopes and berms), and plantings should be integrated features of the transportation corridor, and should be planned, designed, constructed and maintained to complement one another. Use of plants as integral components of and as complements to noise barriers should be considered, if at all feasible. The objective is to reduce life-cycle costs of the improvements. Planting should be used to combat graffiti, to reduce construction costs by building cost-effective barriers, and to enhance public acceptance.

Where plants are to be used as a cover or appliqué for aesthetics and graffiti control, the district should involve the local community which has a strong interest in protecting the community's image and seek participative involvement in protecting the plants from vandalism. This may be accomplished by cooperative agreements or the Adopt-A-Highway Program.

Planting will be considered part of a noise barrier for funding purposes. Planting may be included as part of the barrier project or as a separate contract if more cost-effective. Planting as an element or component of a noise barrier is not subject to the cost limitations of standard highway planting.

Consideration of Environmental Resources

There are various environmental resources which may be impacted by the proposed construction of noise abatement facilities. Those resources which have the greatest potential for being impacted are wetlands, archeological and historic sites, and scenic resources. An overall mitigation and attenuation plan should be developed, balancing the noise impacts and the environmental impacts which would be incurred if noise attenuation is constructed. A visual assessment by the District Landscape Architect to analyze the project impacts should be carried out during the environmental studies when an initial review concludes that a proposed project may have an effect on a scenic resource (see Chapter 29 – Landscape Architecture). The visual assessment

can help determine if the potential impact is significant and what mitigation measures may be appropriate. If a project may impact an eligible or designated scenic highway, the district scenic highway coordinator should also be involved in the evaluation.

Caltrans must consider and preserve scenic values and resources along officially designated scenic highways (see Chapter 1 – Introduction and Chapter 29 – Landscape Architecture) and along highways with scenic values. This requires a thorough evaluation of the benefits of noise attenuation and its impact on visual resources. This evaluation will normally be conducted as part of the project's environmental studies. However, the PE must be aware of the special considerations required, and must verify that the necessary evaluations have been made.

Value Analysis and Life-Cycle Cost Analysis

Chapter 9 – Project Initiation, addresses the need to consider value analysis (VA) studies for all noise barrier projects. The value analysis studies should consider that the basic aim is to achieve satisfactory noise reduction. Specific considerations are:

- Are there non-wall alternatives?
- Can part or all of the reduction be achieved using an earth mound?
- Are there materials which would be acceptable at this location which have not been tried previously?
- Can the need for a safety shape barrier be eliminated by relocating the wall?
- Is the barrier located so that future maintenance costs will be minimized?
- Can expensive aesthetic treatments be reduced or eliminated by judicious use of planting?

These are only a few of the questions which an innovative value analysis team should consider.

Project files for each project which incorporates a noise barrier should include the justification and background for the design type or the options allowed.

Beyond the very basic questions to be addressed in a value analysis study, a life-cycle cost analysis should be conducted for the various types of noise barriers considered for the project. A number of factors are involved in planning, designing, constructing and maintaining noise barriers. Some of these factors are difficult to evaluate. A list of these factors should be used to test any types of barrier being studied, and to justify the barrier material type that is proposed to be built. The analysis will often be

different for a given design type depending on whether it is located adjacent to the traveled way or nearer to the right-of-way line. The life-cycle cost analysis should include all associated costs, including any planting, landscape maintenance and irrigation costs required.

The value analysis and life-cycle cost analysis should be conducted prior to making any presentations of noise abatement options to the public. These studies should be the basis for the alternatives presented at any public meetings.

Reasonableness and Feasibility

Environmental studies may result in recommendations that a proposed project consider providing noise abatement to protect specific properties. However, noise barriers should be constructed only if they are determined to be "reasonable" and "feasible." Making this determination is among the responsibilities of the PE.

Reasonableness

Reasonableness is a more subjective criterion than feasibility. It implies that common sense and good judgment have been applied in arriving at a decision.

The final determination of reasonableness will be made only after a careful and thorough consideration of appropriate factors. Regard should be given for the individual circumstances of each particular project.

In making a reasonableness analysis, consideration should be given to the following, with the understanding that these items are not all-inclusive. Guidance on how to consider these criteria is included in Section 3.

Reasonableness Factors

- Cost effectiveness
  Cost effectiveness should be considered for any proposed noise mitigation. While there is no firm cost effectiveness criterion for noise barriers considered for new highway construction or reconstruction projects, the criterion specified for retrofit noise barriers should be used as a guide. Section 3 provides details on the cost effectiveness criterion.

- Change in noise levels
  Mitigation of traffic noise for new highway construction or reconstruction projects should be considered only if the predicted noise level caused by the roadway improvement project exceeds the criteria indicated by Figure 30-2.

This takes into consideration the difference between the future noise levels for the Build Alternative and the No Build Alternative.

- Development along the freeway

  Consideration should be given to the amount of development that occurred before and after the initial construction of the freeway and the type of development (e.g., residential versus commercial). The relative dates for when adjacent land development is "planned, designed and programmed" and the "date of public knowledge" of the proposed transportation project will be used to determine the reasonableness of providing noise abatement as part of the proposed transportation project.

  Environmental studies will include a traffic noise analysis for developed lands and for undeveloped lands where development is planned, designed and programmed. If a traffic noise impact is expected to occur where development has occurred, or where development is planned, designed and programmed, noise abatement measures must be considered as part of the transportation project. Development is considered to be planned, designed, and programmed if a noise-sensitive land use, such as a residence, school, church, hospital, library, etc., has received a building permit from the local agency with jurisdiction at the time of the noise analysis.

  The date of public knowledge of the proposed transportation project is used to determine if noise abatement should be part of the project, or if noise abatement is the responsibility of local governments or private developers. The date of public knowledge shall be the date that a project's environmental analysis and documentation is approved, i.e., the date of approval of the categorical exclusion (CE), finding of no significant impact (FONSI), or record of decision (ROD). After this date, Caltrans is still responsible for analyzing changes in traffic noise impacts, when appropriate, but is no longer responsible for providing noise abatement for new development which occurs adjacent to the proposed transportation project. Provision of such noise abatement then becomes the responsibility of local communities and private developers.

Additional Reasonableness Considerations

- Environmental impacts of abatement construction

  Consideration should be given to the effects on the social, economic and natural environment caused by the construction of a noise barrier. This includes the potential impacts on scenic resources and scenic corridors which are addressed previously. For new highway construction or reconstruction projects, consideration should be given to the benefits which may be realized by the adjacent residents by having a noise barrier in place prior to the work being performed on the roadway project.

- Land use controls

  Consideration should be given to the likeliness of the qualifying area to change land use designation within the life-cycle of the project. Working with the local agency responsible for the land use designation (i.e., local city or county) will determine if redevelopment of the subject area is a strong possibility. A written statement from the local agency should be obtained for documentation that redevelopment is likely. If it is likely to be redeveloped, it may be prudent to defer the construction of the noise barriers until a final decision is known.

  Qualifying properties that are redeveloped subsequent to the project action are not eligible for noise attenuation to be provided as part of the project. Furthermore, it is appropriate to work with the local agency to identify compatible land use designations (i.e., commercial or business/professional) and appropriate conditions (i.e., developer-built noise barriers to State standards) for property adjacent to State facilities.

- Large noise impacts

  Consideration should be given to noise impacts that are far greater than the normal experienced impacts; i.e., exterior noise levels of 75 dBA, Leq(h), or higher, or a projected noise level increase of 30 dBA, or more, over existing levels.

- Residents' views

  The residents' desires should be considered when noise attenuation is otherwise found to be reasonable and feasible. If 50 percent or more of the affected residents do not want the noise barriers, the barriers will not be constructed. (See earlier discussion for more detail.)

- Outside Construction

  When outside lanes and shoulders are reconstructed for outside widening projects, consideration should be given to providing noise barriers if the predicted noise level approaches or exceeds the noise abatement criteria (NAC), even if it is found to be technically unreasonable. Factors to be considered in this regard would be the opinions of the affected residents toward the construction of noise abatement facilities.

Feasibility

Feasibility is defined with regard to engineering considerations. A 5 dBA noise reduction must be achieved in order for the proposed noise barrier to be considered feasible. Ability to achieve an adequate noise reduction may be limited by: (1) topography; (2) access requirements for driveways, ramps, etc.; (3) the presence of local cross streets; or (4) other noise sources in the area.

SECTION 2 New Highway Construction or Reconstruction

Policy

Reasonable and feasible noise abatement measures should be incorporated into new or reconstruction highway projects (see definition of new and reconstruction in Chapter 2 – Roles and Responsibilities). Federal-aid highway projects of this type are classified by FHWA as Type I. See headings in Section 1 for definitions of the terms reasonable and feasible.

Noise Abatement Criteria

Noise abatement criteria for various land use activity categories are shown in Figure 30-2.

FIGURE 30-2 Noise Abatement Criteria

Activity Category	Hourly A-Weighted Sound Level dBA, Leq(h)	Description of Activity Categories
A	57 exterior	Lands where serenity and quiet are of extraordinary significance and serve an important public need, and where the preservation of those qualities is essential if the area is to continue to serve its intended purpose.
B	67 exterior	Picnic areas, recreation areas, playgrounds, active sport areas, parks, residences, motels, hotels, schools, churches, libraries, and hospitals.
C	72 exterior	Developed lands, properties, or activities not included in Categories A or B above.
D	--	Undeveloped lands.
E	52 (interior)	Residences, motels, hotels, public meeting rooms, schools, churches, libraries, hospitals, and auditoriums.

General

Noise attenuation requirements under California law (i.e., the *California Environmental Quality Act of 1970*) differ from the requirements of the FHWA, which are based on *Title 23 Code of Federal Regulations*, Part 772. Both standards have mitigation requirements when noise effects will substantially increase the

ambient noise levels of adjacent areas. Under the California Environmental Quality Act (CEQA), a substantial increase in noise will result in a significant effect and must be mitigated or "findings" made. Under FHWA regulations, a traffic noise impact must be mitigated when the predicted noise levels "approach or exceed" the noise abatement criteria or when the predicted noise levels substantially exceed predicted noise levels without the project and it is reasonable and feasible to mitigate.

When a noise analysis is to be conducted for a project, one of the first decisions made is to determine which requirements are applicable. Following that decision, environmental personnel will make the analysis by taking into consideration a number of factors. The following overview of those factors is presented for information of the PE. More detail on these factors can be obtained from the district environmental unit

California Environmental Quality Act Requirements

A determination must be made whether the proposed project will substantially increase the ambient (existing) noise levels for adjacent areas.

If there is a substantial increase in noise, the noise must either be mitigated or identified as a noise impact for which it is likely that no, or only partial, abatement measures are available, for reasons including specific economic, social, or other conditions which make additional noise attenuation measures unfeasible. If noise abatement is found to be reasonable and feasible, noise barriers should be constructed.

Federal Highway Administration

Traffic noise impacts occur when the predicted noise levels approach or exceed the noise abatement criteria, or when the predicted noise levels with the project substantially exceed the predicted noise levels without the project. When noise impacts occur, abatement must be considered and mitigation must be provided when reasonable and feasible.

Substantial increase is defined as a predicted 12 dB, or greater, noise increase over the existing worst-hour noise level resulting from the proposed highway project.

Severe traffic noise impact is defined as a predicted increase of noise from a project of 30 dB or an absolute predicted level of 75 dB or greater.

Approaching the Noise Abatement Criteria

For the purposes of noise analysis on new highway construction or reconstruction projects, when the predicted noise level reaches 1 dBA less than the noise abatement criteria, it is considered to be approaching the noise abatement criteria for all land-use categories.

Design Considerations to Mitigate Noise

If traffic noise impacts have been identified, mitigation must be considered and all reasonable and feasible noise abatement measures must be included in the project.

Mitigation measures may include, but are not limited to the following:

- Design alternatives which result in lessening the noise effect. For example, alteration of horizontal and vertical alignment.
- Construction of noise barriers.
- Noise insulation.

If the project location is flexible, horizontal alignments can be selected away from sensitive noise receivers. Or if the horizontal alignment is fixed, perhaps the vertical alignment can be altered to a depressed highway, which reduces noise. Most often, highway alignments are selected on the basis of other overriding factors. The construction of noise barriers is then the most common option available. In some cases, including school noise abatement projects, noise insulation, sealed double-paned windows, and air-conditioning can be used effectively for noise mitigation.

Minimum Attenuation

The noise abatement criteria were developed as a guide to identify traffic noise impacts, and should not be considered as design goals for noise reduction. When designing a noise barrier, the goal should be in terms of the amount of noise reduction provided by the barrier, rather than an attempt to satisfy the noise abatement criteria. When a noise barrier is proposed, it must achieve a “substantial reduction” (a minimum noise reduction of 5 dBA). An exception to this criterion would be appropriate in some cases, such as where a gap between two noise barriers is closed to provide continuity.

Determination of Reasonableness

A discussion of general considerations to be given to reasonableness and feasibility is included in Section 1. This section will provide more details regarding the determination of reasonableness.

The six criteria shown next should be used to make a basic determination of the reasonableness of constructing a noise barrier for new and reconstruction projects. It is recognized there may be instances where abatement should be found to be reasonable and feasible even though it is found to fall outside some of these criteria. Therefore, these criteria should not always be rigidly applied.

Reasonableness Criteria

1. The barrier cost per residence.
   Note: Evaluation of the cost-per-residence should be based on the cost-effectiveness criterion from the retrofit noise barrier program (see Section 3) which is subject to periodic adjustment.
2. The percentage of the impacted housing development that predated the initial highway construction.
3. The percentage of the impacted housing development which has been in place for at least 10 years.
4. The future "build" noise levels (i.e., with the proposed project).
5. The increase in the proposed project's "build" noise levels over the existing noise levels.
6. The increase in the proposed project's future "build" noise levels compared to the future "no-build" noise levels.

Additional Reasonableness Considerations (when appropriate)

1. Environmental impacts
2. Enforcement, or lack of enforcement, of land use controls by local agencies
3. Large noise impacts
4. Residents' views
5. Outside reconstruction

Reporting of Proposed Noise Abatement Decisions

During the environmental process, the PE shall prepare the noise abatement decision report (NADR). The noise abatement decision report incorporates the technical information from the noise study with design considerations and engineering cost. The noise abatement decision report documents which noise abatement strategies are reasonable and feasible and thus should be included in the draft environmental document for public consideration. The noise abatement decision report is submitted to the environmental unit. The noise abatement decision shall be discussed in the draft project report and included the draft environmental document for public circulation. The noise abatement decision report may be incorporated into the draft project report or written as a separate report and summarized in the draft project report. The final noise abatement decision, like the preferred alternative, will be decided by the project development team (PDT) and will be included in the project report and final environmental document. See Appendix K – Preparation Guidelines for Project Report, for additional guidance on the noise abatement decision report.

SECTION 3 Retrofit Noise Barriers on Existing Freeways

General

The policies in this section are governed by *California Streets and Highways Code*, Sections 215.5 and 215.6. For Federal-aid highway participation, the retrofit noise barrier program is also governed by applicable sections of *Title 23 Code of Federal Regulations*, Part 772 covering Type II projects, a project type classification by FHWA on existing freeways with development predating the freeway.

Qualifying Areas

Retrofit noise barrier proposals on existing freeways vary in their qualifications for funding depending on their funding source. Locally funded proposals are not subject to these restrictions:

State Only Funded:

Qualifying developed areas must meet all of the following conditions to satisfy state statutes (*California Streets and Highways Code*, Section 215.5):

- Existing freeway location
- Residential area
- Noise level must be higher than 67 dBA, Leq(h)

Funded Using Federal-aid:

Federal criteria, consistent with *Title 23 Code of Federal Regulations*, Part 772 for Type II projects, indicate that noise abatement measures will only be approved for projects that were approved before November 28, 1995, or are proposed along lands where land development or substantial construction predated the existence of any highway.

Priority Index for Retrofit Noise Barrier Projects

A priority index (PI) is calculated for each project proposed for programming where the measured or adjusted noise levels exceed the noise abatement criteria for activity category B [67 dBA, Leq(h)]. The formula used for the priority index considers achievable reduction (AR), measured noise levels above 67 dBA (NL), number of living units (LU), and the cost of the proposed noise barriers in thousands of dollars:

PI=(AR)(NL-67)2(LU)/Cost($1000)

The achievable reduction is the average reduction in noise levels that the proposed noise barrier will achieve. The noise abatement criteria of 67 dBA, Leq(h) is a goal for achievement, but is not mandatory. However, any noise barrier considered under this program must provide a minimum of 5 dBA noise reduction.

The noise levels is the average of field-measured noise levels, dBA, Leq(h), adjusted to future design hour noise levels using computerized versions of the FHWA Highway Traffic Noise Prediction Model with California Vehicle Noise (CALVENO) reference energy mean emission levels.

The number of living units is limited to the residences immediately adjacent to the freeway (i.e., first line receivers). Residences located above the first floor in multistory units are included in the residential count only if the proposed barrier will provide a 5 dBA reduction for these units.

The project cost in $1,000s used in the calculation includes all costs directly related to the proposed noise barriers. This includes items for earthwork, structural section, drainage, traffic control, structure work, planting and other specialty work, as well as the noise barrier itself.

For projects which include noise barriers at multiple locations, the overall project's priority index is calculated independently for each location. The priority index for the combined project is calculated using a weighted average method, with the weighting based on the number of residential units protected at each location.

Priority Adjustments

One of the factors for determining priority is whether a majority of the occupants in close proximity to the freeway resided there prior to the time the freeway routing was adopted by the California Transportation Commission (CTC). The city or county in which the residential area is located is responsible for providing Caltrans with documentation on percentage of original occupants still residing along the freeway.

If a city or county submits documentation for a specific project that shows the majority of the current occupants in close proximity to the freeway resided there prior to the adoption of the freeway, the priority index calculated by the priority index formula is enhanced by an amount equal to the actual percentage of occupants currently still residing there. For example, if the priority index for a project is

calculated to be 10.00 and the documentation furnished by the local agency indicates that the current residing percentage is 52.5 percent, then the priority index is adjusted to 62.5.

The following definitions apply in determining percentage of original occupants still residing along the freeway:

- Majority – over 50 percent of total persons living in dwelling units that are in close proximity or immediately adjacent to the freeway.
- Occupants – person or persons who are currently occupying the dwelling units under consideration.
- In close proximity – the area encompassed by residential units immediately adjacent to the freeway (same first line receptors used in priority index formula).

If the current occupant or occupants are the owners, then the date of purchase is submitted as documentation. For rental and leased properties, a statement is obtained from the landlord of the date occupancy commenced. For occupants other than principal occupants, a statement from the principal occupants is obtained that shows the date these occupants first began to reside in the residence.

If any city or county contributes at least 33 percent of the estimated cost of any soundwall project included for the first time in the State Transportation Improvement Program (STIP), starting in 1992, the project is given priority over all other soundwall projects included for the first time in that STIP. If due to the accelerated priority given a project two or more projects each qualify for the highest priority, the relative ranking between the projects is determined on the basis of their relative ranking prior to being accelerated.

Cost Effectiveness

Projects on the priority list must be "cost effective". Projects are considered to be cost effective if they cost no more than the criterion established for each residential unit protected by the barrier. The cost effectiveness criterion was established as $35,000 for the 1996 and 1997 calendar years. This criterion will be adjusted each two years by using the California Construction Cost Index as a guide. The adjusted criterion will be issued in each even-numbered year by the Headquarters Noise Abatement Program Manager. Any questions on this should be directed to the Noise Abatement Program Advisor in the Headquarters Division of Environmental Analysis.

The project's cost effectiveness calculation should include all living units (houses, apartments, and condominiums, etc.) that will benefit by a reduction of 5 dBA or more as a result of the noise barrier construction.

Project Costs

The project cost used in making the cost-effectiveness calculation should be the same as that used for calculating the priority index. This same cost should also be used for programming the project unless it is combined with other projects. While all of the directly associated costs should be included in the cost effectiveness calculation, costs associated with other improvements should not be included. For example, if a noise barrier is designed on top of a retaining wall, where the retaining wall would be provided to allow for future widening, the cost of the retaining wall and any embankment and structural section placed behind it should not be included. The cost of work to provide for future widening will have to be funded from other sources. If funding is not available to program the other work, the noise barrier cannot be programmed.

Project Features

Only project features directly attributable to retrofit soundwalls are eligible for funding from the retrofit soundwall program. Acceptable project features associated with retrofit soundwall program projects are:

- Drainage modifications as a result of noise barriers
- Safety treatments as a result of noise barriers
- Miscellaneous asphalt paving
- Traffic control, etc.

Inappropriate project features are:

- Widening (including retaining wall for retrofit soundwalls)
- Any other items not related to retrofit soundwall construction.

SECTION 4 School Noise Abatement Projects

Streets and Highways Code Requirements

California Streets and Highways Code, Section 216 requires Caltrans to mitigate noise that intrudes into specified areas within public and private elementary or secondary schools when that noise is generated by freeway traffic or by the construction of the freeway. The areas eligible for protection from the noise are those that are used as classrooms, libraries, multipurpose rooms, and spaces used for pupil personnel services. When the levels within these areas exceed 52 dBA, Leq(h), Caltrans is required to attenuate the excessive noise. The *California Streets and Highways Code* establishes qualifying criteria that include the time of school construction and current use of the school. Projects under these criteria should be proposed as SHOPP projects, as there is no longer a program specifically for school noise abatement.

Available Options

Noise abatement options include construction of a noise barrier, acoustical treatment of the school structure, or a combination of both. Acoustical treatments may include installing insulation, multi-pane windows and air conditioning equipment. If these treatments are undertaken, the windows must also be sealed to prevent their being opened, which would render the improvements ineffective. A preliminary investigation should be made to determine which method of attenuation is the most appropriate.

Agreements with Schools

When it has been determined that acoustical treatments of the school structure should be undertaken, a cooperative agreement with the school district should be prepared to specify each parties' responsibilities for developing and implementing the project. Typically, the school district will retain an architect to identify the necessary improvements and to design the contract plans, and the school district will award and administer the construction contract. Caltrans' responsibilities are typically confined to reviewing the scope of work proposed, verifying that the work has been satisfactorily completed and for reimbursing the school district for their expenses. See Chapter 16 – Cooperative Agreements, and the *Cooperative Agreement Manual* for additional information on cooperative agreements.

CHAPTER 31 – Nonmotorized Transportation Facilities

Table of Contents

CHAPTER 31 – Nonmotorized Transportation Facilities 31-3
SECTION 1 General 31-3
Introduction 31-3
Definition 31-3
Categories of Projects 31-3
Minimum Annual Funding 31-4
Project Reports Required 31-4
Coordinate Planning & Design with Outside Entities 31-4
SECTION 2 Application 31-5
ARTICLE 1 Routes Severed by Freeways 31-5
Preserving Existing Nonmotorized Capabilities 31-5
Types of Existing Major Routes 31-5
Alternative Routes 31-5
Proposals After Freeway Construction 31-6
ARTICLE 2 New Corridors 31-6
Criteria for New Corridors 31-6
Public Hearing Requirements 31-6
Public Hearing Process 31-6
Financing 31-7
ARTICLE 3 Cooperative Projects 31-7
Request by Public Agency 31-7
Location Guidelines 31-7
State Funding Contribution 31-7
ARTICLE 4 State Projects 31-8
Caltrans Initiation 31-8
State Funding 31-8
Types of State Projects 31-8
SECTION 3 Planning Guidelines 31-9
Early Evaluation of Need 31-9
Freeways 31-9
Expressways and Conventional Highways 31-9
Toll Bridges 31-9
Maintenance Provisions 31-10
Encourage Relinquishment 31-10

Consult with Local Agencies Prior to Abandonment 31-10
Funding 31-11
SECTION 4 Design Guidelines 31-12
California Statutes 31-12
Bicycle Design Criteria and Traffic Control Devices 31-13
Improvements Not on the State Highway System 31-13
Pedestrian Design Policy and Criteria 31-14
Pedestrian Accessibility 31-14
SECTION 5 Approvals 31-15
Project Report and Public Hearing 31-15
Changes in Access Control 31-15
Federal Highway Administration Approval 31-15

CHAPTER 31 – Nonmotorized Transportation Facilities

SECTION 1 General

Introduction

State and federal laws require Caltrans to promote and facilitate increased use of nonmotorized transportation. The purpose of this chapter is to outline pertinent statutory requirements, planning policies, and implementing procedures regarding nonmotorized transportation facilities.

Definition

Section 887 of the Streets and Highways (S&H) Code defines a "nonmotorized transportation facility" as a facility designed primarily for the use of pedestrians, bicyclists, or equestrians. It may be designed primarily for one of these uses or it may be designed as a joint-use facility.

A nonmotorized transportation facility may be part of the highway (such as a shoulder) or it may be separated from highway traffic for exclusive nonmotorized use (such as a bike path or sidewalk).

Categories of Projects

Any new projects for nonmotorized transportation facilities along a State highway or within its right-of-way will generally fall into one of the following categories:

- Replacement of an existing major route for nonmotorized traffic that is being severed or destroyed by freeway construction (S&H Code -- Section 888)
- Provision of a nonmotorized facility along a new freeway corridor where nonmotorized facilities do not exist (S&H Code -- Section 888.2)
- Provision of a nonmotorized facility along a State highway under a Cooperative Agreement at the request of a local agency (S&H Code -- Section 887.6)

- Provision of a nonmotorized facility along a State highway based upon a finding that the traffic safety or capacity of the highway will be increased (S&H Code -- Section 887.8). The finding is made in consultation with appropriate law enforcement agencies.

In addition, any development of a State highway project should address features beneficial to nonmotorized traffic, including (but not limited to) widening shoulders, striping, and signing.

Minimum Annual Funding

Section 888.4 of the S&H Code requires an annual state-wide budget of at least $360,000 for new nonmotorized transportation facilities to be used in conjunction with the State Highway System. The primary emphasis of the program is to benefit bicyclists. Projects in this program should be designed to improve safety and convenience for bicyclists and to increase traffic safety or capacity of the highway. Because funds are limited, priority should be given to projects that close gaps in bikeways, eliminate high accident frequency locations, and serve high-use areas such as schools, employment centers, shopping areas, parks, beaches, and other activity centers.

Project Reports Required

Proposals for nonmotorized transportation facilities that are within the State right-of-way or are included as part of a State construction project, require the preparation of a project report (PR) or other appropriate report, as specified in Chapter 12 – Project Approvals and Changes to Approved Projects, Section 4.

Coordinate Planning & Design with Outside Entities

Planning and design processes for all projects must address the needs of nonmotorized users, and must be fully coordinated with federal, State, regional, and local agencies, as well as user groups served by the project. Bikeway planning and design criteria are found in Chapter 1000 of the *Highway Design Manual (HDM)*.

SECTION 2 Application

ARTICLE 1 Routes Severed by Freeways

Preserving Existing Nonmotorized Capabilities

Section 888 of the Streets and Highways (S&H) Code states that Caltrans will not construct a State highway as a freeway that will result in the severance or destruction of an existing major route for nonmotorized traffic and light motorcycles unless it provides a reasonable, safe, and convenient alternate route or unless such a route already exists.

A "light motorcycle", as used in the above context, is defined as a motor-driven cycle or a motorized bicycle, both of which are defined in Sections 405 and 406 of the Vehicle Code.

Types of Existing Major Routes

An existing major route for nonmotorized traffic may be any of the following:

- Conventional highway or expressway
- Sidewalk on a conventional highway: The sidewalk may be principally for pedestrian use but may also be used by bicyclists when permitted by local ordinance.
- Freeway shoulder on which bicycle traffic is permitted in accordance with Vehicle Code, Section 21960, and for which no reasonable, safe, or convenient alternate route is available.
- Path within the freeway right-of-way
- Path outside of the freeway right-of-way
- Path outside of the roadway

Alternative Routes

A reasonable, safe, and convenient alternate route can consist of a system of local routes or State highways. The alternate route should not consist of significant out-of-direction travel, additional grades of significant length or slope, or high-volume routes with narrow shoulders.

Proposals After Freeway Construction

Pursuant to Section 888 of the S&H Code, nonmotorized facilities proposed after a freeway has been constructed do not qualify as an "alternate route" for a severed or destroyed nonmotorized route. Instead, such facilities are to be developed as a cooperative project under the provisions of Sections 887.6 and 888.2 of the S&H Code.

ARTICLE 2 New Corridors

Criteria for New Corridors

Section 888.2 of the S&H Code states that Caltrans will incorporate nonmotorized transportation facilities into the design of freeways on the State Highway System along corridors where nonmotorized facilities do not exist, upon a finding that such facilities: (1) would conform to the California Recreational Trails System Plan or (2) would (following a public hearing) conform to the nonmotorized transportation master plans of local agencies; would not duplicate existing or proposed routes; and would enhance community interests.

Public Hearing Requirements

When designing a new freeway, the project engineer (PE) must determine if nonmotorized facilities or reasonable, safe, and convenient alternate routes exist or are proposed within the corridor. The findings must be discussed as part of the regular public hearing for the project or at a separate public hearing to comply with the requirements of Section 888.2 of the S&H Code.

For projects past the regular public hearing stage, local agencies should be contacted to determine their desires regarding nonmotorized transportation facilities. If a local agency requests nonmotorized facilities to be included in the project, Caltrans must conduct a public hearing. It is important to note that if Caltrans defers inclusion of nonmotorized facilities until after the freeway is completed, it may still be required to include the facilities at a later date, under the provisions of Sections 887.6 or 887.8 of the S&H Code.

Public Hearing Process

The public hearing process, if separately accomplished, should follow normal procedures, as specified in Chapter 11 – Public Hearing. At the hearing it is

important to fully discuss and document the relationship of the freeway project and its nonmotorized transportation facilities to the California Recreational Trails Plan, the local agencies' nonmotorized master plans or bicycle transportation plans, and the regional agencies' Regional Transportation Plan.

Financing

Nonmotorized facilities constructed under Section 888.2 of the S&H Code are financed with State highway funds.

ARTICLE 3 Cooperative Projects

Request by Public Agency

Section 887.6 of the S&H Code states that:

> Upon the request of a public agency, the department may enter into an agreement with the agency for the construction and maintenance of nonmotorized transportation facilities which generally follow a state highway right-of-way where the department has determined that the facility will increase the safety and convenience of bicyclists.

Location Guidelines

The facility may be inside or outside of the highway right-of-way. The PE should document the availability of reasonable, safe, and convenient alternate routes and the relationship of the project to the local agencies' nonmotorized master plans or bicycle transportation plans and the regional agencies' Regional Transportation Plan.

State Funding Contribution

Section 887.6 of the S&H Code further states that:

> The department's contribution, if any, to the cost of constructing the nonmotorized facilities shall be based upon a finding that the traffic safety or capacity of the highway will be increased. The agreements may provide for the handling and accounting of funds, the acquisition of right-of-way, maintenance, and any other phase of the project.

ARTICLE 4 State Projects

Caltrans Initiation

Section 887.8 of the S&H Code states that Caltrans may construct and maintain nonmotorized transportation facilities approximately paralleling State highways after consulting with the law enforcement agency having jurisdiction over the highway.

State Funding

If Caltrans determines that a nonmotorized facility approximately paralleling the highway would increase traffic safety or traffic capacity on the highway, Caltrans pays for the construction and maintenance of the nonmotorized facility.

Types of State Projects

Examples of State-funded projects include:

- A bikeway in an area where a freeway constructed prior to 1976 severed or destroyed a major nonmotorized route
- Striping and signing a State highway shoulder as a bikeway—or constructing a separate path—to provide continuity to a local or regional bikeway system
- Widening a State highway shoulder to improve safety and convenience for nonmotorized users

SECTION 3 Planning Guidelines

Early Evaluation of Need

Caltrans must address the needs of bicyclists and pedestrians in the initial planning stages of all projects and must coordinate the planning of nonmotorized projects with relevant outside entities.

Freeways

Section 21960 of the Vehicle Code allows Caltrans to prohibit nonmotorized travel on freeways. It is Caltrans' policy to prohibit pedestrians on freeways. However, Caltrans allows bicycle travel on approximately one-fourth of the State's freeways. Freeway shoulders that are open to bicyclists are usually in non urban areas where a safe and convenient alternate route does not exist.

For additional information regarding bicyclists and pedestrians on freeways, see Chapter 100 of the *Highway Design Manual*.

Expressways and Conventional Highways

Nonmotorized traffic is not prohibited on expressways and conventional highways. The vast majority of bicycling is done on public roads with or without bikeway designations. When the roadway and the shoulders are adequately paved and maintained, they provide safe and convenient routes for most bicyclists.

Toll Bridges

Bicycle and pedestrian facilities should be considered on new toll bridges and their connections. Caltrans should coordinate the development of the facilities with local and regional agencies to ensure continuity of a nonmotorized transportation system in the area.

The cost of the facilities on the bridges and their connections is paid for by Caltrans as part of the cost of the construction of the bridge, unless the cost of such facilities is to be paid by a governmental agency other than a State agency.

Maintenance Provisions

Nonmotorized projects within the State highway right-of-way that are partially funded by local agencies may be maintained by local agencies under a cooperative agreement with Caltrans.

If the nonmotorized facility is a bike path or a walkway that connects to a local nonmotorized facility, and if it is outside the limits needed for operating and maintaining the roadway, then Caltrans should seek agreement for the local agency to maintain the facility. Maintenance by the local agency can provide continuity in the maintenance of the local nonmotorized system and helps demonstrate a local willingness to cooperate in the project. Maintenance provisions should be established that do not compromise the safety or operation of the highway.

If the nonmotorized facility is a bike route or bike lane on the shoulder of the roadbed, Caltrans should maintain it as part of its normal roadway maintenance.

Maintenance responsibility may vary with the circumstances; however isolated segments or parallel facilities of substantial length near the roadway should be maintained by Caltrans, as discussed above.

Encourage Relinquishment

Section 73 of the Streets and Highways (S&H) Code states that the California Transportation Commission (CTC) may relinquish any nonmotorized facility (as defined in S&H Code, Section 887) constructed as part of a State highway project, to a county or city within whose territorial limits it is located. As a condition for relinquishment, the county or city must enter into an agreement or adopt a consenting resolution. See Chapter 25 for more information.

Consult with Local Agencies Prior to Abandonment

Section 892 of the S&H Code requires Caltrans to consult with local agencies to determine if State highway right-of-way could be developed as a nonmotorized transportation facility prior to taking any abandonment actions. If Caltrans and local agencies determine that the right-of-way can be developed as a nonmotorized transportation facility, then Caltrans must first make the property available to the local agencies. These procedures are described in Sections 104.15 and 887.6 of the S&H Code and in Section 14012 of the Government Code.

Caltrans needs to determine the potential for development of the property as a nonmotorized transportation facility and include the determination in the notification of proposed abandonment. The determination should include any known local or regional plans for nonmotorized facilities on the property and any schedules for construction and funding by the local agency responsible for development of the facility.

Funding

Federal, State, and local funding is also available to local agencies for local nonmotorized projects.

The federal Intermodal Surface Transportation Efficiency Act (ISTEA) provides Caltrans and local agencies with nonmotorized facilities funding from several sources. The regional transportation planning agencies and CTC establish priorities for projects.

Caltrans administers the Bicycle Lane Account, which provides $360,000 a year to local agencies for projects that improve safety and convenience for bicycle commuters. In addition, the State Local Transportation Fund provides funds to local agencies for nonmotorized projects.

Caltrans is also eligible for ISTEA funds for nonmotorized projects. As discussed in Section 1, it must set aside at least $360,000 per year for nonmotorized transportation facilities used in conjunction with the State Highway System.

SECTION 4 Design Guidelines

California Statutes

California Streets and Highways Code, Section 890.6

Section 890.6 states:

> (a) The department, in cooperation with county and city governments, shall establish minimum safety design criteria for the planning and construction of each type of bikeway identified in Section 890.4 and roadways where bicycle travel is permitted.
>
> (b) The criteria shall include, but not be limited to, the design speed of the facility, minimum widths and clearances, grade, radius of curvature, pavement surface, actuation of automatic traffic control devices, drainage, and general safety, with consideration for the safety of vulnerable populations, such as children, seniors, persons with impaired vision, and persons of limited mobility. The criteria shall be published by January 1, 2016, and updated biennially, or more often, as needed.
>
> (c) The criteria shall be established in consultation with the existing advisory committee of the department dedicated to improving access for persons with disabilities.

California Streets and Highways Code, Section 890.8

Section 890.8 states:

> The department shall establish uniform specifications and symbols for signs, markers, and traffic control devices to designate bikeways, regulate traffic, improve safety and convenience for bicyclists, and alert pedestrians and motorists of the presence of bicyclists on bikeways and on roadways where bicycle travel is permitted.

California Streets and Highways Code, Section 891

Section 891 states:

> (a) All city, county, regional, and other local agencies responsible for the development or operation of bikeways or roadways where bicycle travel is permitted shall utilize the minimum safety design criteria established pursuant to Section 890.6, except as provided in subdivision (b), and shall utilize the uniform specifications and symbols for signs, markers, and traffic control devices established pursuant to Section 890.8.
>
> (b) An agency may utilize minimum safety design criteria other than those established by Section 890.6 if all of the following conditions are met:
>
> > (1) The alternative criteria have been reviewed and approved by a qualified engineer with consideration for the unique characteristics and features of the proposed bikeway and surrounding environs.
> >
> > (2) The alternative criteria, or the description of the project with reference to the alternative criteria, are adopted by resolution at a public meeting, after having provided proper notice of the public meeting and opportunity for public comment.
> >
> > (3) The alternative criteria adhere to guidelines established by a national association of public agency transportation officials.

Bicycle Design Criteria and Traffic Control Devices

The *Highway Design Manual* Chapter 1000 – Bicycle Transportation Design contains the design criteria discussed in *California Streets and Highways Code*, Section 890.6.

The *California Manual on Uniform Traffic Control Devices* *(California MUTCD)* contains the information for signs, markers, and traffic control devices discussed in *California Streets and Highways Code*, Section 890.8.

Improvements Not on the State Highway System

For improvements on local systems, the responsible local entity is delegated authority to exercise their engineering judgment when utilizing the applicable design guidance and standards, including those for bicycle facilities established by Caltrans pursuant to *California Streets and Highways Code*, Sections 890.6 and 890.8. The Caltrans *Local Assistance Procedures Manual*, Chapter 11 provides the guidance for documenting design decisions on local systems when engineering judgment is exercised for deviation from accepted design standards.

Pedestrian Design Policy and Criteria

Policy and criteria for developing pedestrian facilities are contained in Topic 105 – Pedestrian Facilities of the *Highway Design Manual* and *Design Information Bulletin 82* – Pedestrian Accessibility Guidelines for Highway Projects.

Pedestrian Accessibility

Buildings and transportation facilities on all projects must be accessible within the State highway rights-of-way in accordance to federal and State law. The *Americans with Disabilities Act of 1990*, along with its implementing regulations, and the *California Government Code*, Section 4450 et seq., prescribe that buildings and facilities shall be made accessible to persons with disabilities. Accessibility design standards for the State of California are prescribed in *Title 24 California Code of Regulations;* in Part 2, the *California Building Code*. The Department of General Services, Division of the State Architect (DSA), oversees *California Building Code* compliance.

Except for rail and transit stations, within the State highway rights-of-way, Caltrans (in addition to Division of the State Architect) is authorized by State law to certify, on a project-by-project basis, that a project complies with State pedestrian accessibility design standards for transportation facilities. *Design Information Bulletin 82* – Pedestrian Accessibility Guidelines for Highway Projects, provides design guidance on pedestrian accessibility for highway projects and how to comply with the various federal laws and State codes.

Division of the State Architect reviews and provides the required approval that a rail or transit station project complies with the State pedestrian accessibility code.

SECTION 5 Approvals

Project Report and Public Hearing

For projects on freeways where nonmotorized facilities do not exist, the Draft and final Project Report should discuss the following items regarding a nonmotorized facility: (1) the project's conformity with the California Recreational Trails System Plan; or (2) the local agency's nonmotorized transportation master plans or bicycle transportation plans; the non-duplication of existing or proposed nonmotorized routes; and the enhancement of community interests as a result of the nonmotorized project.

Item (2) should be discussed at the public hearing. If the public hearing process has already occurred, a separate public hearing will be required.

Changes in Access Control

Nonmotorized projects are often proposed within the access control line on existing freeways and expressways. It may be necessary to obtain Federal Highway Administration (FHWA) concurrence for a change in access control. Consult with the Headquarters Project Delivery Coordinator.

Federal Highway Administration Approval

Programs involving Federal-aid participation have guidelines that specify approval procedures for nonmotorized projects. Additional FHWA approval is normally not required. Districts should review the guidelines for specific information regarding approval procedures for nonmotorized projects.

CHAPTER 32 – Lands and Buildings Facilities

Table of Contents

CHAPTER 32 – Lands and Buildings Facilities 32-3
ARTICLE 1 General..... 32-3
Lands and Buildings Facility Category Structure..... 32-3
Office Buildings..... 32-3
Unique Lands and Building Facilities Features..... 32-4
Comply with State Energy and Environmental Design Requirements..... 32-4
District and Headquarters Relationship..... 32-5
Project Manager..... 32-5
Design Responsibilities 32-6
Minor Projects 32-6

CHAPTER 32 – Lands and Buildings Facilities

ARTICLE 1 General

Lands and Buildings Facility Category Structure

Projects in the Lands and Buildings Facilities Category of the Highway Capital Outlay Program are divided into four programs:

- 20.XX.201.351 Equipment Facilities
- 20.XX.201.352 Maintenance Facilities
- 20.XX.201.353 Office Buildings
- 20.XX.201.354 Materials Labs

Each program is assigned to a Headquarters division chief to act as the State Highway Operation and Protection Program (SHOPP) program manager.

The Headquarters Division of Transportation Programming provides overall coordination and programming among the subprograms. Lands and Buildings Facilities projects are generally funded in the SHOPP.

A facility project study report (PSR) or equivalent shall be approved by the District Director prior to listing any project in the SHOPP. Refer to Chapter 9 – Project Initiation, for additional information on the project initiation of SHOPP projects.

Office Buildings

The CaliforniaDepartment of Finance (DOF) must approve office building projects before they are included in the Governor's Budget. They must conform to *State Administrative Manual* (SAM) requirements. New office buildings and annexes follow a specialized approval process due to their uniqueness. Districts must work closely with the Headquarters Division of Administration, the Headquarters Division of Budgets, and the Headquarters Division of Transportation Programming for office building project development and funding proposals, as well as the California Department of General Services (DGS) for their design.

Unique Lands and Building Facilities Features

The Lands and Building Facilities Category has several features which differentiate it from other SHOPP categories. Although it is a relatively small program, it has added importance because it directly affects the working environment of Caltrans' employees. Project candidates are usually derived from facility master plans prepared by the respective program managers. The needed architectural and structural engineering expertise has been centralized within Caltrans in the Headquarters Division of Engineering Services-Structure Design, Office of Transportation Architecture.

Comply with State Energy and Environmental Design Requirements

To comply with *Executive Order S-20-04*, Caltrans shall:

- Take all cost-effective measures as described in the State of California Green Building Action Plan to build and operate the most energy- and resource-efficient buildings; and
- Design, construct, and operate all new and renovated buildings at a "Leadership in Energy and Environmental Design (LEED) Silver" or higher rating. The United States Green Building Council developed the LEED Rating System to advance energy and material efficiency and sustainability.

The Executive Order and Green Building Action Plan are available at the following link: http://www.green.ca.gov/default.htm

To achieve the desired LEED rating for the project, LEED components shall be identified as part of the scope of work in both the facility PSR and project report. Headquarters Division of Engineering Services and district designers will collaborate on what these LEED components will be. The architect will be the project LEED coordinator. The architect will assist the project development team in identifying the appropriate LEED components and credits, and ensuring the credits are achieved throughout the life of the project. The project architect will be responsible for completing the LEED Credit Checklist based on the identified credits. The completed LEED Credit Checklist is required as an attachment to both the facility PSR and project report. Contact Headquarters Division of Engineering Services-Structure Design, Office of Transportation Architecture for a copy of the LEED Credit Checklist.

District and Headquarters Relationship

Districts are responsible for project management and, through the project manager, are ultimately responsible for project delivery. Districts are usually directly responsible for project identification, facility PSR, project report, environmental clearance, right-of-way acquisition, site plan preparation (utilities, drainage, paving, etc.), and plan review.

Headquarters Division of Engineering Services is responsible for the building design portions of Lands and Buildings Facilities projects with the exception of office buildings that are completed by the California Department of General Services. Both Headquarters Division of Engineering Services and the district share in the construction-engineering portion of the projects. If the design is contracted out, the consultant may be responsible for both the architectural and the district plans, with technical review provided by Headquarters Division of Engineering Services and the district design units.

The SHOPP program managers are responsible for ensuring individual project compliance with the goals of the funding program. The SHOPP program managers advise the districts in project identification and development. They prioritize project candidates within their subprograms and generally provide technical expertise.

Even though the Lands and Buildings Facilities Category has unique features, it is still part of Caltrans' Capital Outlay Program. Although the districts are responsible for delivering individual projects, the program as a whole is managed on a statewide basis and the districts have not been delegated authority to change scope, cost, or schedule without Headquarters' approval. The SHOPP program manager is responsible for balancing available funding on a statewide basis.

Project Manager

For every project, the district must name a project manager who has responsibility for developing and meeting schedules and insuring accurate cost estimates. The project manager should be assigned as early as possible, after a project is identified as a high priority in the facility master plan, and definitely before commencing the project initiation document. The project manager should be identified in all reports and correspondence.

Design Responsibilities

For non-office buildings, Headquarters Division of Engineering Services has the role of consultant to the districts. At the district's request, they will provide engineering and architectural services, including advice relating to the program. Project delivery priorities are established through the project programming process.

Minor Projects

Usually, a minor program is a district program with minimal input from Headquarters. However, for the Lands and Buildings Facility Program, a limit on available design resources has led to annual prioritization of minor projects. The district Minor A program manager, in conjunction with the Headquarters SHOPP Lands and Buildings Facility Program Manager and Headquarters Division of Engineering Services, develops a priority list approximately two years in advance for each fiscal year. Any changes will require both district and Headquarters approval.