DESIGN INFORMATION BULLETIN NO. 83 - 04

CALTRANS SUPPLEMENT TO FHWA CULVERT REPAIR PRACTICES MANUAL

This document establishes uniform procedures to carry out the highway design functions of the California Department of Transportation. It is neither intended as, nor does it establish, a legal standard for these functions. The procedures established herein are for the information and guidance of the officers and employees of the Department.

This document is not a textbook or a substitute for engineering knowledge, experience or judgment. Many of the instructions given herein are subject to amendment as conditions and experience may warrant. Special situations may call for variation from the procedures described, subject to the approval of the Division of Design, or such other approval as may be specifically called for.

TABLE OF CONTENTS

1.1 INTRODUCTION 1
1.1.1 Objectives 1
1.1.2 Organization 1
1.1.3 Overview of Problem 2
2.1 CULVERT STRUCTURES 3
2.1.1 Material 3
2.1.1.1 Rigid 3
2.1.1.1.1 General 3
2.1.1.1.2 Concrete Pipe 4
2.1.1.1.3 Other Rigid Materials 4
2.1.1.1.3.1 Reinforced Polymer Mortar Pipe (RPMP) 4
2.1.1.1.3.2 Polymer Concrete Pipe 5
2.1.1.1.3.3 Fiber Reinforced Concrete Pipe 5
2.1.1.1.3.4 Ductile Iron 5
2.1.1.2 Flexible 5
2.1.1.2.1 Metal Pipe 6
2.1.1.2.2 Plastic Pipe 6
2.1.1.2.3 Fiberglass – Fiber Reinforced Plastic (FRP) 7
2.1.1.3 Culvert Coatings 7
2.1.1.3.1 Coatings for Concrete and Other Culverts 7
2.1.1.3.2 Coatings for Metal Culverts 9
2.1.2 Service Life for Culvert Rehabilitation; Geotechnical Factors 10
2.1.2.1 Hydrogen-Ion Concentration (pH), Soil Resistivity, Chloride and Sulfate Concentration of the Surrounding Soil and Water 10
2.1.2.2 Material Characteristics of the Culvert 10
2.1.2.3 Abrasion 11
3.1 PROBLEM IDENTIFICATION AND ASSESSMENT 13
3.1.1 Culvert Inspection Program (CIP) 13
3.1.2 Office Review 14
3.1.3 Site Visit and Inspection 14
3.1.3.1 Voids and Piping in the Backfill 23

4.1 END TREATMENT AND OTHER APPURTENANT STRUCTURE REPAIRS AND RETROFIT IMPROVEMENTS 25

4.1.1 Headwalls, Endwalls and Wingwalls 25

4.1.2 Outfall Works 25

5.1 PROBLEM IDENTIFICATION AND ASSOCIATED REPAIR FOR CULVERT BARRELS 27

5.1.1 Concrete Culverts 27

5.1.1.1 Joint Repair 27

5.1.1.1.1 Misalignment 27

5.1.1.1.2 Exfiltration 28

5.1.1.1.3 Infiltration 28

5.1.1.1.3.1 Chemical Grouting 29

5.1.1.1.3.2 Internal Joint Sealing Systems 32

5.1.1.1.4 Cracked and Separated Joints 33

5.1.1.2 Cracks 34

5.1.1.2.1 Longitudinal Cracks 35

5.1.1.2.2 Transverse Cracks 36

5.1.1.3 Spalls 36

5.1.1.4 Slabbing 37

5.1.1.5 Invert Deterioration/Concrete Repairs 38

5.1.1.6 Crown Repair/Strengthening 39

5.1.2 Corrugated Metal Pipes and Arches 39

5.1.2.1 Joint Repair 39

5.1.2.2 Abrasion and Invert Durability Repairs 41

5.1.2.2.1 Invert Paving 43

5.1.2.2.2 Invert Paving with Concreted Rock Slope Protection (CRSP) or Calcium Aluminate Abrasion Resistant Concrete 47

5.1.2.2.3 Steel Armor Plating 47

5.1.2.2.3.1 Welded Steel Pipeliners 49

5.1.2.3 Soil Migration 50

5.1.2.4 Corrosion 51

5.1.2.4.1 Human Entry 52

5.1.2.4.1.1 Cathodically Protecting Metal Culverts 53

5.1.2.4.2 Non-Human Entry 53

5.1.2.5 Shape Distortion 53
5.1.3 Structural Plate Pipe 55
5.1.3.1 Seam Defects 55
5.1.3.2 Seam Repair, Invert Durability and Shape Distortion 56
5.1.4 Aluminum Pipe 57
5.1.5 Plastic Pipe 57
6.1 GENERAL CULVERT BARREL REHABILITATION TECHNIQUES 59
6.1.1 Caltrans Host Pipe Structural Philosophy 59
6.1.2 Grouting Voids in Soil Envelope 60
6.1.2.1 Voids Below the Invert 60
6.1.2.2 Voids Within the Backfill 60
6.1.3 Rehabilitation Families 62
6.1.3.1 Sliplining (General) 62
6.1.3.1.1 Sliplining Using Plastic Pipe Liners 65
6.1.3.1.1.1 Allowable Types of Plastic Liners 65
6.1.3.1.1.2 Strength Requirements 66
6.1.3.1.1.3 Pipe Dimensions 67
6.1.3.1.1.4 Grouting 74
6.1.3.1.1.5 Joints 75
6.1.3.1.1.6 Installation 76
6.1.3.1.1.7 Other Considerations 77
6.1.3.2 Lining with Cured-In-Place Pipes 78
6.1.3.3 Lining with Folded and Re-Formed PVC Liner (Fold and Form) 80
6.1.3.4 Lining with Deformed-Reformed HDPE Liner 81
6.1.3.5 Lining with Machine Wound Plastic Liner 83
6.1.3.6 Sprayed Coatings 86
6.1.3.6.1 Air Placed Concrete and Epoxy or Polyurethane Lining for Drainage Structures 86
6.1.3.6.2 Cement Mortar Lining 87
6.1.3.7 Man-Entry Lining with Pipe Segments 88
6.1.3.7.1 Fiberglass Reinforced Cement (FRC) Liners 89
6.1.3.7.2 Fiberglass Reinforced Plastic (FRP) Liners 89
6.1.3.8 Other Techniques 91
6.1.3.9 IHS Server Link 91

7.1 INFLUENCING FACTORS 91
7.1.1 Hydrology 91
7.1.2 Hydraulics 91
7.1.3 Safety 92
7.1.4 Environmental 92
7.1.5 Host Pipe Dimensions and Irregularities 93
7.1.6 Coordination with Headquarters and Division of Engineering Services (DES) .. 94
7.1.6.1 Headquarters Concurrence for Large Diameter Liners 94
7.1.6.2 Geotechnical Design Assistance/Approval for Pipe Replacement using Trenchless Excavation Construction (TEC) Methods 94
7.1.6.3 Coordination with Geotechnical Design 94
7.1.7 Maximum Push Distance for Large Diameter Flexible Pipe Liners 96
8.1 GUIDELINES FOR COMPARISON OF ALTERNATIVE REHABILITATION TECHNIQUES 97
8.1.1 Table of Alternative Repair Techniques 97
8.1.1.2 Failing Culvert Solutions Summary 104
8.1.2 Process Flow Charts 104
9.1 REPLACEMENT 105
9.1.1 Repair Verses Replacement 105
9.1.2 Replacement Systems 105
9.1.2.1 Open Cut (Trench) Method 106
9.1.2.2 Trenchless Excavation Construction (TEC) Methods 106
9.1.2.2.1 Pipe Jacking 117
9.1.2.2.1.1 Auger Boring 119
9.1.2.2.2 Pipe Ramming 119
9.1.2.2.3 Microtunneling 120
9.1.2.2.4 Pipe Bursting and Pipe Splitting 122
9.1.2.2.5 Trenchless Replacement References 122
9.1.2.3 Other Considerations for TEC 123
10.1 NEW PRODUCT APPROVAL PROCESS AND CONSTRUCTION-EVALUATED EXPERIMENTAL FEATURE PROGRAM 129
11.1 OTHER CONSIDERATIONS 130
11.1.1 Supporting Roadway and Traffic Loads 130
11.1.2 Compaction Grouting 132

11.1.3 Future Rehabilitation 133

12.1 APPENDIXES 134

Appendix A – Butt Fusion Procedures for Solid Wall HDPE Slipliner 135

Appendix B – Flow Chart of the New Product Approval Process 141

Appendix C – Typical Resistivity Values and Corrosiveness of Soils 142

Appendix D – Crack Repair in Concrete Pipe Using a Maximum Strength, Non-Shrink, Portland Cement or Mortar (Refer to Index 5.1.1.2) 143

Appendix E – Sources of Information and Industry Contacts 144

Appendix F – CIPP Guidance for Resident Engineers 152

Appendix G – Case Studies 165

Example 1: Ed-50-PM 14.0 (4C9104) Culvert Repair Summer 2003 165

Example 2: 03-Nevada-80 PM 4.0 Culvert Repair (Castle Creek) EA 03-4C3601 (Summer 2003) 180

Example 3: 03-Yub-49 KP 9.5/PM 5.9 (3C3504) Emergency Repair of CMP (Summer 2003) 188

Example 4: Compaction Grouting 193

Appendix H – Design Examples 195

Design Example 1: (36 in. x 227 ft 10-ga CMP) 195

Design Example 2: 108 inch x 384 ft SSPP (10 gage) 199

Design Example 3: (84” x 145 ft RCP) 201

1.1 INTRODUCTION

1.1.1 Objectives

Numerous documents and publications have already been written on the issue of culvert repair. The primary purpose of this Design Information Bulletin (D.I.B.) is to supplement the 1995 Federal Highway Administration Publication 'Culvert Repair Practices Manual-Volumes 1 and 2' (refer to on-line FHWA Hydraulics publications: http://www.fhwa.dot.gov/bridge/hydpub.htm), highlight areas of general concern, and reference other appropriate documentation to provide information, guidelines and alternatives for the cost-effective repair, rehabilitation, strengthening or retrofit upgrade of culverts and storm drains as described in Indices 806.2 and 838.1 of the Highway Design Manual (HDM). In addition, information contained in this D.I.B. supplements Topic 853 - Pipe Liners and Linings for Culvert Rehabilitation of the HDM and Section 15-6 of the 2010 edition of the Standard Specifications.

This D.I.B. is intended to be of assistance to design, maintenance, hydraulic and structural engineers who are responsible for decisions regarding maintenance, repair, rehabilitation, retrofit upgrading, and replacing highway culverts.

Many new products and techniques have been developed that often make complete replacement with open cut unnecessary. When used appropriately, these new products and techniques can benefit the Department in terms of increased mobility, cost, and safety to both the public and contractors. This D.I.B. is intended to build a collection of procedures that are cost-effective for their location and that will meet the needs of their particular area.

1.1.2 Organization

This D.I.B. is organized into twelve sections:

- Index 1.1 provides an introduction, purpose, target audience, and a general overview of problem.
- Index 2.1 reviews the most common materials used in culvert conduits and associated Highway Design Manual (HDM) references for material selection and service life. It provides general discussions on the behavior of rigid and flexible pipe and references the appropriate Caltrans standards for excavation, backfill and installation. Service life for culvert rehabilitation is also discussed in conjunction with various geotechnical factors, which include: pH, resistivity, chloride and sulfate concentration of the surrounding soil and water, and abrasion potential.
- Index 3.1 discusses problem identification and assessment through field inspection.
- Index 4.1 outlines culvert end treatment and other appurtenant structure repairs and retrofit improvements for headwalls, endwalls, wingwalls and outfall works.
- Index 5.1 outlines various types of problems that can be encountered in culvert barrels and presents guidelines and information on procedures for the associated repairs.

- Index 6.1 provides information on general culvert rehabilitation techniques. This section discusses Caltrans host pipe structural philosophy, grouting voids and provides a comprehensive outline of the various rehabilitation families and techniques.
- Index 7.1 discusses the following influencing factors that should be considered: hydrology, hydraulics, safety, environmental, host pipe dimensions and irregularities, and headquarters assistance/approval for large diameter plastic liners and pipe replacement using Trenchless Excavation Construction (TEC) methods.
- Index 8.1 provides a summary table and references for comparison of the various alternative rehabilitation techniques and guidance on the overall process.
- Index 9.1 discusses replacement; the decision process used to determine whether to repair or replace. Open cut and a comprehensive listing of the various trenchless replacement systems are provided, along with other considerations for TEC.
- Index 10.1 discusses Caltrans New Product Approval Process and construction evaluated experimental feature program and appropriate headquarters contacts.
- Index 11.1 Identifies some other considerations that should be taken into account when analyzing alternatives to repair and/or replace culverts.
- Index 12.1 – Appendixes provides supplemental information on; butt fusion procedures, Caltrans New Product Approval Process, culvert inspection, corrosion and crack repair in concrete pipe. Also provided are sources of repair information, industry contacts, cured in place pipe (CIPP) guidance for resident engineers, some large diameter metal pipe repair case studies, and design examples.

1.1.3 Overview of Problem

Culverts are an integral part of the highway system, and like other parts of the system they are subject to deterioration. Currently, culverts functionally classified as bridges (see Index 62.2 (2) of the HDM) are inspected at least every two years. In 2005 the Department initiated a statewide culvert inspection program resourced through maintenance. Camera equipped vehicles for culvert inspection are available in every District. See Index 3.1.1. However, culvert repair work is frequently approached strictly as a maintenance problem without consideration of the underlying structural or hydraulic conditions from which the deterioration originates. Surveys performed recently have shown relatively high percentages of culverts in need of at least some form of repair.

Because of the large number of aging culverts in use today, the Department is faced with a major expense in repairing, rehabilitating, and replacing culverts as they reach the end of their design service life.

To date, there has been limited written guidance available within the Department on the topic of how to rehabilitate culverts without disrupting traffic.

2.1 CULVERT STRUCTURES

2.1.1 Material

The most common materials used in culvert conduits are reinforced concrete, corrugated steel, and corrugated high-density polyethylene. Other materials that may be found in culvert conduits are corrugated aluminum, non-reinforced concrete, ribbed polyvinyl chloride (PVC), welded steel, timber, and masonry. Refer to HDM Chapter 850, Topics 851, 852, 855 and 857 for guidance on Material Selection, Design Service Life and Kinds of Pipe Culverts. Refer to FHWA Culvert Repair Practices Manual Volume 1, pages 2-18 to 2-30 for a description of culvert materials and coatings for culvert materials. Refer to Table 857.2 in the HDM for allowable alternative pipe materials for various types of installations.

These various pipe materials will have differing types of response to applied load. Based on this response, the pipe material can be categorized as either rigid or flexible, as described in Indices 2.1.1.1 and 2.1.1.2. This distinction in behavior is important not only in understanding how a pipe will perform under various soil and live load conditions, but will also affect failure mechanisms and repair considerations.

HDM Index 857.2 provides general guidelines for alternative pipe culvert selection using the AltPipe web-based program that is located on the Headquarters Office of Highway Drainage Design (within the Division of Design Headquarters Division of Design) website at the following web address: http://www.dot.ca.gov/hq/oppd/altpipe.htm

2.1.1.1 Rigid

2.1.1.1.1 General

If the culvert material is rigid (usually reinforced concrete), the load is carried primarily by the structure walls. Refer to FHWA Culvert Repair Practices Manual Volume 1, pages 2-7 to 2-8, 2-11 and 2-31 to 2-35 for a description of pipe loading, rigid culvert behavior and installation. As described on page 2-33 and in Figures 2.20 and 2.21 on pages 2-34 and 2-35, it is very important to have uniform bedding to distribute the load reaction around the lower periphery of the pipe. Adequate support is critical in rigid pipe installations, or shear stress may become a problem. Excavation, backfill and culvert beddings shall conform to the details shown on the Standard Plans numbered A62D, RSP A62DA, A62E and to the provisions in Section 19-3, “Structure Excavation and Backfill” of the Standard Specifications. In addition, slurry cement backfill or controlled low strength material (CLSM) may be used in lieu of structure backfill. Per Index 856.5 of the HDM, a stress reducing slab may be used for culverts where it is necessary to have less than 2 feet of cover below the top of a flexible pavement.

2.1.1.1.2 Concrete Pipe

Laying Circular Reinforced Concrete Pipe

Per Topic 855.1 of the HDM, for reinforced concrete pipe (RCP), box (RCB) and arch (RCA) culverts maintenance free service life, with respect to corrosion and abrasion and/or durability, is the number of years from installation until the deterioration reaches the point of exposed reinforcement at any location on the culvert.

Refer to Standard Plan D88 for required minimum cover for construction loads on reinforced concrete pipes and arches.

For non-reinforced concrete pipe culverts, per HDM Topic 855.1 maintenance free service life, with respect to corrosion and abrasion and/or durability, is the number of years from installation until the deterioration reaches the point of perforation or major cracking with soil loss at any point of the culvert.

2.1.1.1.3 Other Rigid Materials

2.1.1.1.3.1 Reinforced Polymer Mortar Pipe (RPMP)

Reinforced Polymer Mortar (semi-rigid) pipes (RPMP) are made by mixing a high strength thermosetting polyester resin, aggregate/sand and chopped glass fiber roving to form a type of semi-rigid concrete. The resin within the mix provides for bonding the aggregate much like Portland Cement does in traditional concrete pipes. Cement and water are not used and this product may be used in corrosive applications. It is also lightweight with less wall thickness compared to RCP and uses push-together joints instead of a bell and spigot. RPMP is available in diameters from 18 inches to 102 inches and section lengths of 5, 10 and 20 feet. See FHWA Culvert Repair Practices Manual Volume 1, page 2-27 and refer to ASTM D3517.

Currently, Caltrans does not contemplate developing new Standard Specifications for this product; however, this product is approved for jacking and microtunneling for permit installations. See Indices 9.1.2.2.1 and 9.1.2.2.3. There is a very limited use for RPMP in typical direct burial culvert applications due to its relatively high cost. However, in addition to jacking and microtunneling applications, there is potential usage for RPMP as a slipliner if site conditions dictate a structural design. See Index 6.1.3.1. and ASTM D3262. In large diameter human entry pipes the material may also be viable for use as a segmental liner (see index 6.1.3.7.1).

Since RPMP is specially designed to fit specific site loading and hydraulic characteristics, the Underground Structures Unit within Caltrans Division of Engineering Services (DES) should be contacted for a project-by-project review. See Index 7.1.6.2.

Maintenance free service life, with respect to corrosion and abrasion and/or durability, is the number of years from installation until the deterioration reaches the point of perforation or major cracking with soil loss at any point of the culvert.

2.1.1.1.3.2 Polymer Concrete Pipe

Also known as Polyester Resin Concrete (PRC), this type of pipe is currently not included in Caltrans. The materials used in polymer concrete include resin, sand, gravel, and quartz powder mineral filler. Similar to RPMP pipes, Polymer concrete pipes are lightweight compared to RCP and use push-together joints with gaskets. PRC pipes may be viable for use in some specialized applications including corrosive environments (pH ranges of 1 to 10) and pipe jacking or microtunneling (high compressive strengths of up to 13,000 psi), see Indices 9.1.2.2.1 and 9.1.2.2.3.

2.1.1.1.3.3 Fiber Reinforced Concrete Pipe

The fiber cement industry has grown out of the asbestos cement industry. Fiber reinforced concrete pipe consists of cellulose fiber, silica sand, cement, and water. Fiber reinforced concrete pipe is potentially a durable, lightweight option to non-reinforced concrete pipes. It is not approved or included in Caltrans Standards for use as a direct burial alternative pipe. However, in large diameter man entry pipes the material may be viable for use as a segmental liner. See Index 6.1.3.7.1.

2.1.1.1.3.4 Ductile Iron

Ductile iron is a strong, durable semi-rigid pipe. Even though ductile iron has been used for culvert and storm drains, it is generally not a cost effective option and there are no Caltrans Standards. Occasionally this material may be a consideration for use as a slipliner.

2.1.1.2 Flexible

If the culvert material is flexible (usually metal or plastic), a soil-pipe interaction must be present in order that the pipe is able to transfer the bulk of the load to the surrounding soil. In other words, the soil, not the pipe, carries and supports most of the live and dead load. Suitable backfill material and adequate compaction are of critical importance – especially below the springline. A well-compacted soil envelope of adequate width is needed to develop the lateral pressures required to maintain the shape of the culvert. The

width of the soil envelope is a function of the strength of the surrounding in-situ soil and the size of the pipe. This is achieved by meeting the requirements that are outlined in Section 19-3 of the Standard Specifications for Structure Excavation and Backfill and conforming to the details shown on Standard Plan A62F. Refer to FHWA Culvert Repair Practices Manual Volume 1, pages 2-9 to 2-10 for a description of flexible culvert behavior. Also, refer to Standard Plan D88 for required minimum cover for construction loads on plastic pipes and metal culverts. See Index 2.1.1.1.1 for discussion of structure backfill alternatives. See HDM Topic 856.5 and Table 856.5 for minimum thickness of cover required for design purposes.

2.1.1.2.1 Metal Pipe

For all metal pipes and arches that are listed in Table 857.2 in the HDM, maintenance free service life, with respect to corrosion and abrasion and/or durability, is the number of years from installation until the deterioration reaches the point of perforation at any location on the culvert. This is primarily a function of corrosivity and abrasiveness of the environment into which the pipe is placed. See Figure 855.3A - Minimum Thickness of Metal Pipe for 50 Year Maintenance Free Service Life and Figure 855.3B – Chart for Estimating Years to Perforation of Steel Culverts (California Test 643) in the HDM. Note that the service life estimates referenced in Figures 855.3A and 855.3B, are for various corrosive conditions only, and both these charts require, as a minimum, site-specific pH and minimum resistivity data from District Materials in order to determine the pipe's corrosion resistant service life. For a detailed discussion of maintenance free service life and durability of metal pipe, refer to Topic 852.3 and 852.3 (2) *Durability*, in the HDM. For a detailed discussion of corrosion, see Index 5.1.2.4 of this document. For a detailed discussion of metal pipe abrasion see Indices 2.1.4.1 and 5.1.2.2.

The following is a brief summary of the material design step considerations for metal pipe:

1) Metal thickness adequate to support fill height (see HDM Tables 856. A-P).
2) Use Figures 855.3A and 855.3B to determine the minimum thickness and limitation on the use of steel, aluminum or aluminized steel (corrugated or spiral rib) pipe.
3) Consider Aluminized Steel or Aluminum if applicable.
4) Increase Metal thickness to offset corrosion and abrasion effects.
5) Consider Protective Coating or invert paving using Tables 855.2C and 855.2F (knowing channel bedload material and stream velocity) if necessary.
6) Check material design meets design service life per Topic 855.1(1).

2.1.1.2.2 Plastic Pipe

"Plastic" pipe is as unspecified a term as is "metal" pipe. The two most commonly used plastics are polyvinyl chloride (PVC) and high-density polyethylene (HDPE). The limited data that is available regarding plastic pipe for culvert applications suggests that plastic materials may provide equivalent service life in a potentially broader range of environmental conditions than either metal or concrete. Both PVC and HDPE are unaffected by the chemical and corrosive elements typically found in soils and water. In

addition, both types have exhibited excellent abrasive resistance. Plastic pipe materials are also subject to some limiting conditions that often are not a consideration in selecting other culvert types which include: extended exposure to sunlight (specifically ultra-violet radiation) and a higher potential for damage from improper handling and installation. See Index 5.1.4. Plastic is also flammable; PVC will melt/burn under high temperatures but is inherently difficult to ignite and will self-extinguish once the heat source is removed. PVC brittleness increases with decreased temperatures and/or long term exposure to ultra-violet radiation. However, temperature considerations are most important if the pipe is likely to be handled or impacted during periods of low temperatures, therefore, situations where PVC pipe is placed where temperatures are regularly below freezing should be avoided. HDPE will continue to burn as long as adequate oxygen supply is present. Based on testing performed by Florida DOT, this rate of burning was fairly slow, and often "burned itself out" if there wasn't sufficient airflow through the pipe. End treatments using metal or concrete (flared end sections or headwalls) will limit the possibility of fire damage.

Per Topic 855 of the HDM, maintenance free service life, with respect to corrosion and abrasion and/or durability, is the number of years from installation until the deterioration reaches the point of perforation at any location on the culvert or at the onset of wall buckling. and/or for further discussion on durability and strength requirements. See Section 64 of the Standard Specifications for pipe material, joints, earthwork and concrete backfill requirements. See Index 2.1.1.2 for a general discussion on flexible pipe behavior and excavation and backfill considerations. See Index 6.1.3.1.1 for sliplining using plastic pipe liners. For further discussion on plastic pipe, see Index 5.1.4 and FHWA Culvert Repair Practices Manual Volume 1, pages 2-25 and 2-26.

2.1.1.2.3 Fiberglass – Fiber Reinforced Plastic (FRP)

FRP is not included in the Caltrans Allowable Alternative Materials Table 857.2 of the HDM and is typically not economically competitive for use as a direct burial alternative culvert material. FRP pipe is available in diameters from 12 inches to 144 inches. For further discussion on FRP, see FHWA Culvert Repair Practices Manual Volume 1, page 2-26.

2.1.1.3 Culvert Coatings

2.1.1.3.1 Coatings for Concrete and Other Culverts

As discussed in FHWA Culvert Repair Practices Manual Volume 1, pages 2-28 to 2-30, a variety of coating types may be used either singularly or in combination to protect culverts from corrosion and or abrasion and meet design service life requirements.

Caltrans Abrasion Test Panel Installation Showing Various Culvert Materials and Coatings

Polyvinyl Chloride (PVC) Lined RCP is not listed in the FHWA Culvert Repair Practices Manual. It is primarily used for protection from corrosion, but also provides some sacrificial abrasion resistance to RCP in lieu of additional cover and/or admixtures. PVC Lined RCP uses Polyvinyl Chloride sheet liners that cover three hundred sixty degrees (360°) of the interior surface of the pipe. It was originally designed specifically to protect new concrete sewer pipe against hydrogen sulfide gas/sulfuric acid attack.

Example Polyvinyl Chloride (PVC) Lined RCP Using T-Lock^{tm} Polyvinyl Chloride (PVC) Sheet Liners Manufactured By Ameron Protective Linings Division

Designers need to be aware that both the cement in concrete as well as the reinforcing steel in RCP are susceptible to chemical attack and will occasionally need to be protected. For pH ranging between 7.0 and 3.0 and for sulfate concentrations between 1500 and 15,000 ppm, concrete mix designs conforming to the recommendations given in Table 855.4A of the HDM should be followed. Higher sulfate concentrations or lower pH values may preclude the use of concrete or would require the designer to develop and

specify the application of a complete physical barrier. Reinforcing steel can be expected to respond to corrosive environments similarly to the steel in CSP. Referring to Figure 855.3A it is apparent that combinations of pH and minimum resistivity will lead to corrosion of reinforcing steel if water can penetrate through the concrete. In a similar fashion, waters with high chloride concentrations (e.g., marine environments) can also lead to corrosion of reinforcing steel. However, properly designed and installed RCP (i.e., minimal cracking due to handling/construction loading) will typically provide adequate concrete coverage over the reinforcing steel to provide protection to the steel, except under extreme conditions. Contact the District Materials unit or Corrosion Technology in Engineering Services for design recommendations when in extremely corrosive conditions. Non-Reinforced concrete pipe is not affected by chlorides or stray currents and may be used in lieu of RCP (with additional concrete cover and/or protective coatings) for sizes 36 inches in diameter and smaller. See Table A in Index 2.1.2.2, HDM Table 855.4A, and HDM Index 852.1(4).

2.1.1.3.2 Coatings for Metal Culverts

Coatings for metal culverts are designed to provide either a corrosion barrier (generally covering the entire periphery of the pipe) or a sacrificial layer of abrasive resistant material (generally concentrated in the invert of the pipe). While increasing the pipe's metal thickness to offset corrosive or abrasive effects can also be specified, coatings are typically more cost effective and should be given first consideration.

HDM Table 855.2C lists all of the plant-applied approved coatings for steel culverts and constitutes a guide for estimating the added service life that can be achieved based upon abrasion resistance characteristics only. Field application of a concrete invert lining or even special abrasion resistant tiles or linings can also be specified to increase service life due to abrasive conditions.

Under most conditions, plain galvanizing of steel pipe is all that need be specified. However, the presence of corrosive or abrasive elements may require the use of various coating products, used either individually or in combination. The Department of Fish and Game (DFG) has approved the use of polymeric sheet coating; however, DFG will restrict the use of bituminous coatings as discussed in the HDM. It should be noted that polymeric sheet coating was originally developed as a corrosive barrier although it can also provide additional protection from abrasion.

Where significant soil side corrosion and abrasion are present, a composite steel spiral rib pipe, which is externally pre-coated with a polymeric sheet, and internally polyethylene lined, may also provide additional service life. Index 852.3 (2) (a) of the HDM discusses these approved protective coatings and their application to protect against corrosion, abrasion, or both. Section 66-1.02C of the Standard Specifications outlines the requirements for the approved coatings.

Determining when a coating is needed, and what type to call for will depend on the results of the materials/geotechnical investigation and an assessment of the corrosive and abrasive potential of the site by the designer. Minimum resistivity; pH; sulfate concentration; type, size and hardness of bedload materials can affect both durability and selection of appropriate coating. In many cases, multiple coating types may be effective

and as such the contractor should be given the option of selecting the most cost effective of those that meet minimum service life requirements.

While generally perceived as an alternative pipe product as opposed to a coating, the application of a thin layer of aluminum over steel (i.e., aluminizing) can often be a very effective mechanism to enhance the durability of steel pipe. Per the material design selection considerations listed in Index 2.1.1.2.1, if the channel bedload is non-abrasive, the pH of the soil, backfill, and water is within the range of 5.5 to 8.5, inclusive, and the minimum resistivity is 1500 ohm-centimeters or greater, the use of Aluminized Steel (type 2) should be considered prior to considering alternative coatings or increasing the thickness of the steel. See Index 852.3 (2) (b) of the HDM. Aluminized steel should be considered to be equivalent to galvanized steel when abrasion is a factor. See Table 855.2D of the HDM.

Where soil side corrosion is the only concern, polymeric coated steel pipe service life should be evaluated using Figure 855.3B (to determine steel thickness necessary to achieve 10-year minimum life of base steel), with the assumption that the (exterior) polymeric coating will provide additional protection to attain the 50-year service life requirement.

For locations where water side corrosion and/or abrasion is of concern, recently developed coating products like polymeric sheet, can provide superior abrasive resistant qualities (as much as 10 or more times that of bituminous coatings of similar thickness).

2.1.2 Service Life for Culvert Rehabilitation; Geotechnical Factors

Generally, for culvert rehabilitation, the design service life basic concepts are the same as those defined in Index 855.1 of the HDM. Plastic pipe liners should be considered the same as plastic pipe with no additional service life added for annular space grouting. The estimated design service life for rehabilitation projects should be the same as indicated in Index 855.1(1) of the HDM.

Regardless of the method or material selected to repair, rehabilitate or replace the culvert, the following influences must be assessed during any estimation of service life:

2.1.2.1 Hydrogen-Ion Concentration (pH), Soil Resistivity, Chloride and Sulfate Concentration of the Surrounding Soil and Water

Both concrete and metal pipes can be subject to corrosion attack. In reinforced concrete culverts, a high sulfate concentration will cause the cement to deteriorate whereas the reinforcing steel can be corroded if there is a low pH or high chloride concentration. See Indices 2.1.1.3.1 and 2.1.1.3.2, Table A in Index 2.1.2.2, Tables 855.4A, 855.4B and Figure 855.3A of the HDM.

2.1.2.2 Material Characteristics of the Culvert

A careful determination of geotechnical factors at the Culvert site should be made to assure proper material selection for any repair or restoration. Table A suggests limitations and potentials for culvert materials.

Table A

Material	Acceptable pH range	Resistivity Level (ohm-cm)	Abrasion Potential	Chloride/Sulfate resistance
Steel	See HDM Table 855.3 B	See HDM Table 855.3 B	Low(3)	(5)
Aluminum	5.5-8.5(1)	>1500(1)	Varies(1)	(5)
Plastic	>4(6)	N/A	Generally Low(6)	N/A
Concrete	>3(2)	N/A	Low to High(4)	Sulfates(2)
Polymer Mortar	1-13	N/A	Generally Low	N/A

(1) Aluminum corrodes differently than steel and is not susceptible to corrosion attack within the acceptable pH range of 5.5-8.5 when considering abrasion potential. See HDM Index 852.4(2)(a) thru (e), abrasion potential dependent upon, velocity, size, shape and hardness of bedload, i.e., velocities > 5 ft/s only allowable for a small, rounded bedload.

(2) See HDM Table 855.4A for recommended cement type and minimum cement factor when pH range is 3 to 5.5.

(3) Assuming zinc galvanizing is present and base steel not exposed to corrosion attack.

(4) Abrasion potential for concrete is dependent upon the quality, strength, and hardness of the aggregate and density of the concrete as well as the velocity of the water flow coupled with abrasive sediment content. There is a correlation between decreasing water/cement ratio, increasing compressive strength and increasing abrasion resistance.

(5) Chlorides and sulfates combined with moist conditions may create a hostile corrosive environment. Minimum resistivity indicates the relative quantity of soluble chlorides and sulfates present in the soil or water. See HDM Figure 855.3A.

(6) PVC may experience greater abrasive wear in an acidic environment.

2.1.2.3 Abrasion

Abrasion is the wearing of pipe material by water carrying sands, gravels and rocks (bed load). There are multiple factors that should be considered when attempting to estimate the abrasion potential of a site and associated service life of a culvert and/or lining material including size, shape, hardness and volume of bed load in conjunction with volume, velocity, duration and frequency of stream flow in the culvert. For example, at independent sites with a similar velocity range, bedloads consisting of small and round particles will have a lower abrasion potential than those with large and angular particles such as shattered or crushed rocks. Given different sites with similar flow velocities and particle size, studies have shown the angularity of the material may have a significant impact to the abrasion potential of the site. All types of pipe material are subject to abrasion and can experience structural failure around the pipe invert if not adequately protected. Four abrasion levels have been developed by FHWA to assist the designer in quantifying the abrasion potential of a site. The abrasion levels and recommended pipe/invert materials that are presented in HDM Table 855.2A are similar to the four abrasion levels that have been developed by FHWA, however, some modifications have

been made based on research data. The descriptions of abrasion levels are intended to serve as general guidance only, and not all of the criteria listed for a particular abrasion level need to be present to justify defining a site at that level. Included with each abrasion level description are guidelines for providing an abrasive resistant pipe, coating or invert lining material. The designer is encouraged to use those guidelines in conjunction with the abrasion history of a site to achieve the required service life (see Index 2.1.2) for a pipe, coating or invert lining material. See HDM Index 855.2 Abrasion.

Sampling of the streambed materials is generally not necessary, but visual examination and documentation of the type, size and shape of the materials in the streambed and the average stream slopes will provide the designer with the general site characteristics needed to determine the expected level of abrasion from HDM Table 855.2A. Where an existing culvert is in place, the wear rate of the invert should also be estimated and compared with HDM Tables 852.2D – F to determine the expected level of abrasion.

The stream flow velocity in the culvert should be based on typical intermittent flows and not a 10 or 50-year event. This is because most of the total abrasion will occur during these more frequent smaller events. For velocity determination of typical intermittent flow, the velocities in Tables 855.2A – D and 855.2F of the HDM should be compared to those generated by the 2-5 year return frequency flood.

Corrugated steel pipes are typically the most susceptible to the combined actions of abrasion in conjunction with corrosion – this has led to a wide range of protective coatings being offered. However, steel plate and welded steel pipeliners are viable alternatives for use as an invert lining. See Index 5.1.2.2 for abrasion and invert durability repairs of corrugated metal culverts.

Aluminum may display inferior abrasion characteristics than steel in non-corrosive environments, however, Aluminized Steel (Type 2) can be considered equivalent to galvanized steel for abrasion resistance. Furthermore, in some cases, Aluminum may display less abrasive wear than steel in a corrosive environment depending on the volume, velocity, size, shape, hardness and rock impact energy of the bed load.

Polymer Mortar, fiber reinforced plastic and other resin-based products such as Cured in Place Pipeliner (CIPP) offer good abrasion resistance and are not subject to corrosion effects. The same can be said for PVC and HDPE; however, PVC may experience greater abrasive wear in an acidic environment (pH < 4).

Concrete pipes will counter abrasion through increased minimum thickness over the steel reinforcement, i.e., by adding additional sacrificial material. In RCP it is possible to specify an additional 0.5 inches of cover, however, RCP is generally not recommended as an alternative in abrasive environments. Abrasion potential for any concrete lining is dependent upon the thickness, quality, strength, and hardness of the aggregate as well as the velocity of the water flow coupled with abrasive sediment content. There is a correlation between decreasing water/cement ratio, increasing compressive strength and increasing abrasion resistance. For further discussion on concrete invert paving, see Index 5.1.2.2.1 and HDM Index 853.6.

Various Culvert Material Test Panels Shown Above After 1 Year Of Wear At Site With Moderate To Severe Abrasion (Velocities Generally Exceed 10 ft/s, See Table Next Page). Note: the significant wear to abrasive resistant protective coatings, which, would typically not be recommended under these conditions (see table next page). The bed load material composed of 90% quartz sand. Also note the wear on the leading edges (right) of the steel nuts.

3.1 PROBLEM IDENTIFICATION AND ASSESSMENT

Over the years, culverts have traditionally received less attention than bridges. Since culverts are less visible it is easy to put them out of mind, particularly when they appear to be performing adequately. Safety is the most important reason why culverts should be inspected.

3.1.1 Culvert Inspection Program (CIP)

Under the CIP, the physical characteristics and condition of Caltrans' culverts and related drainage system assets are inventoried and assessed by state forces. The purpose of the CIP is to identify and address drainage system deficiencies before they become a serious problem.

The CIP was established in 2005 by a $2.5 million Budget Change Proposal (BCP) and implemented in all twelve districts during FY 2006/07. All districts maintain a functional database, into which drainage asset inspection information is entered (i.e., photos/video, condition summary), to manage statewide culvert inventory and prioritize state fiscal and other resources for protecting, maintaining, restoring and improving drainage facilities in Caltrans' right of way.

A rating system was developed by Caltrans Division of Maintenance in lieu of the FHWA rating system and is compatible with the Caltrans Culvert Inventory database. For more information see attached link to the Culvert Inspection Manual:

http://onramp.dot.ca.gov/hq/maint/OMSWEC/Drainage/CIP/Docs/Inspection_Manual_10-31-08.pdf

3.1.2 Office Review

Prior to heading out to the field, the first step is to review the as-built plans to establish a baseline for service life from the construction date and to better understand the design parameters of the culvert facility including type, size, physical and geographical locations. In addition, the designer should review the drainage files (if available) for the hydrological and hydraulic parameters of the culvert to determine a preliminary understanding of outlet velocity, design headwater and abrasion level and perform supplemental calculations as needed.

When available, at a minimum, the following information sources and references generally should be included as part of the office review prior to heading out to the field:

- As-built plans (Construction date, pipe material, thickness, coating etc.)
- Materials/Geotechnical Report (pH, resistivity, chlorides, sulfates, groundwater etc.)
- Culvert database (Maintenance Culvert Inspection Program)
- Hydraulic Report/Hydrology Study (Q_{100} – Headwater/Velocity & flow regime)
- Google Earth (Aerial and street view of watershed and topography)
- Photo Log
- HDM Abrasion Tables 855.2A, 855.2B, 855.2D and 855.2F

3.1.3 Site Visit and Inspection

The goal of the site visit to a deteriorated culvert is to establish the underlying *cause* of the problem by observing all of the symptoms which may be present and performing additional tests, explorations and measurements as required.

There are several key activities that must always be performed during a culvert inspection to ensure that a culvert is functioning adequately. The inspection should evaluate structural integrity, hydraulic performance and roadside compatibility. It is important to determine the underlying cause of a problem so that it will not recur or become more serious.

In most instances, District Maintenance will have already conducted an initial inspection - either as part of the culvert inspection program, or as a result of a problem being discovered by Maintenance forces. When inspection information within Maintenance does not already exist, the designer may contact District Maintenance to schedule an inspection of all culverts that are suspected of needing repair as part of a pavement rehabilitation or highway reconstruction project to existing facilities. This information, either pre-existing or via specifically scheduled inspection, needs to occur early in the

PID phase of the project in order to generate appropriate repair strategies and their associated cost estimates. See HDM Index 803.3.

For non-human entry culvert inspections (generally less than 36”), it will be necessary for the designer to request the culvert inspection crew within Maintenance to perform an inspection of the barrel using a remote controlled video camera. All Districts have remote cameras.

Only staff with confined space training and proper equipment may enter confined spaces. The District or Headquarters Safety and Health Officers are responsible to ensure standardized training is given on a regular basis and that qualified trainers and instructors are available.

Per Caltrans safety manual, a confined space is any location that meets the following definition:

1) An employee can physically enter, and
2) Has limited or restricted means of entry or exit, and
3) Is not designed for continuous employee occupancy.

Confined spaces include structures or facilities such as tanks, bridge cells, *shafts*, pits, bins, tubes, pipelines, deep trenches, vaults, vats, pump houses or compartments, sewage lift stations, *culverts*, cofferdams, elevator pits, or similar locations.

For more detailed information on confined spaces, see Chapter 14 of the Safety Manual.

Work activities that include human entry into regulatory defined tunnels or shafts to conduct construction activities must address the requirements of the California Code of Regulations (CCR), Title 8, Subchapter 20 - Tunnel Safety Orders (TSO). The regulations apply to underground structures of 30 inches or greater diameter or shaft excavations of 20 feet or more in depth. However, inspection for design purposes or inspection as a part of construction close-out of tunnels, shafts or other underground facilities are *not* affected by these regulations.

For more detailed information on Tunnel Safety Orders, see HDM Index 110.12.

For safety, the assessment team should consist of at least two people.

Recommended field safety and inspection gear to have available for conducting field assessments of culverts includes:

- Traffic Safety Vests and Hardhat (mandatory)
- Safety goggles (mandatory)
- Waterproof boots
- Work gloves
- Geologist pick hammer
- Clipboard
- 25-foot Measuring Tape or Folding Carpenters Ruler
- Digital camera (shock-resistant and waterproof)
- Flashlight (500k to 1M candle) and/or head lamp

- Personal Air Monitoring Device
- Tool Belt or backpack for Hands-Free Carrying of Inspection Equipment
- Cell phones and/or Field Radios
- CTL Crack comparator card (concrete pipes)
- Folding Shovel, Machete and Pry-Bar
- Inclinometer
- Paint spray can(s)

There are several key activities that should be performed during a culvert inspection to ensure that a culvert is functioning adequately. The following general elements are recommended to consistently determine cause, type, and extent of culvert problems:

a) Evaluate the roadway for cracks or depressions:

b) Evaluate the embankment and median for depressions, sinkholes, scour or piping:

Further investigations by Geotechnical Design may be needed. Refer to Index 7.1.6.3 for coordinating with Geotechnical Design.

c) Evaluate the stream for bedload type, debris load type, high water marks, profile, waterway, watershed (organic or inorganic, major changes since original construction), upstream storage, downstream erosion, fish and aquatic species:

d) Evaluate the culvert barrel for changes in shape (metal and plastic pipe), loss of backfill (by using hammer soundings), signs of corrosion, abrasive wear and existing thickness (for metal pipe, contact the Corrosion Technology Branch within DES):

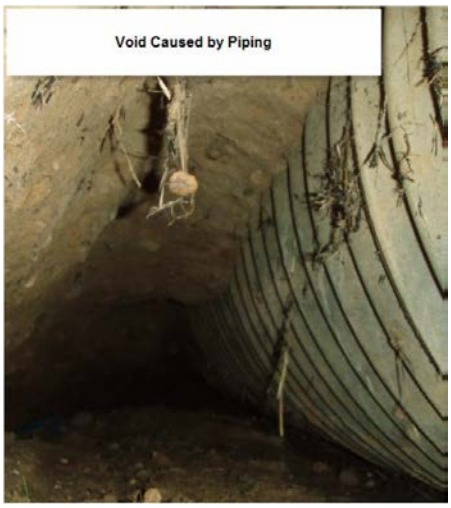

e) Evaluate the culvert barrel for joint integrity, soil loss, alignment, cracks (concrete pipe - check location and crack width) and structural integrity:

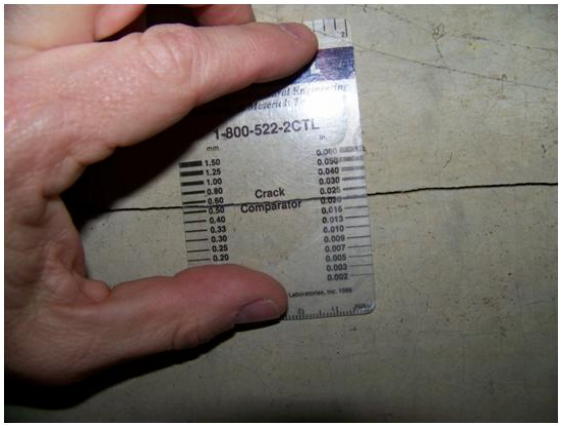

f) Evaluate the inlet and culvert barrel functionality for piping and passing debris:

g) Evaluate the inlet and roadway for signs of overtopping or high water:

h) Evaluate the inlet and roadway for available headwater:

i) Evaluate the outlet for piping

j) Evaluate the outlet for slope, or downstream channel erosion:

For long pipes 24 inches or smaller in diameter, it will probably be necessary to perform an inspection of the barrel with a remote controlled video camera. All Districts have a remote camera.

Remote Controlled Camera Vehicle

District 3 Video Inspection Vehicle

The camera system is also used to respond to Maintenance requests for investigation, which may lead to Capital Projects. If available, this unit may be utilized during project construction for investigating the quality of joints, backfill operations, or other needs**.** The uses may vary from district to district.

The following references discuss problem identification and assessment:

- FHWA Culvert Inspection Manual (refer to on-line FHWA Hydraulics publications: http://www.fhwa.dot.gov/bridge/hydpub.htm) provides guidelines for the inspection and evaluation of existing culverts. Although it is a stand-alone supplement to the bridge inspector's training manual, the guidelines are generally applicable to culverts of all sizes and it is recommended as the primary inspection reference by Caltrans staff for all culvert inspection.
- Chapter 3, FHWA Culvert Repair Practices Manual Volume 1, and Table 7.1 on page 7-5. See Figures 3.2, 3.3 and 3.4 on pages 3-9, 3-10 and 3-12 for flow charts outlining the overall process for analysis of problems and solutions.

3.1.3.1 Voids and Piping in the Backfill

When the water table is higher than the culvert invert, water may seep into the culvert between storms. Infiltration can occur during flood events by suction from pressure differentials in inlet control culverts. If voids in the backfill are discovered during the field review, the most likely cause of soil loss is the migration of soil fines from infiltration - either through a worn invert or leaking joints. It is important to investigate the full extent of the voids. In human entry culverts this may simply involve performing hammer soundings (if metal pipe) along with a thorough evaluation of the roadway and the embankment for cracks, depressions, sinkholes, scour or piping. In non-human entry culverts that are inspected by camera, if symptoms such as a worn invert or open joints are present, the same thorough evaluation of the roadway and the embankment must be performed. However, if the full extent of the voids or their cause (e.g. groundwater) is still unknown, further investigations by Geotechnical Services may be needed. See below.

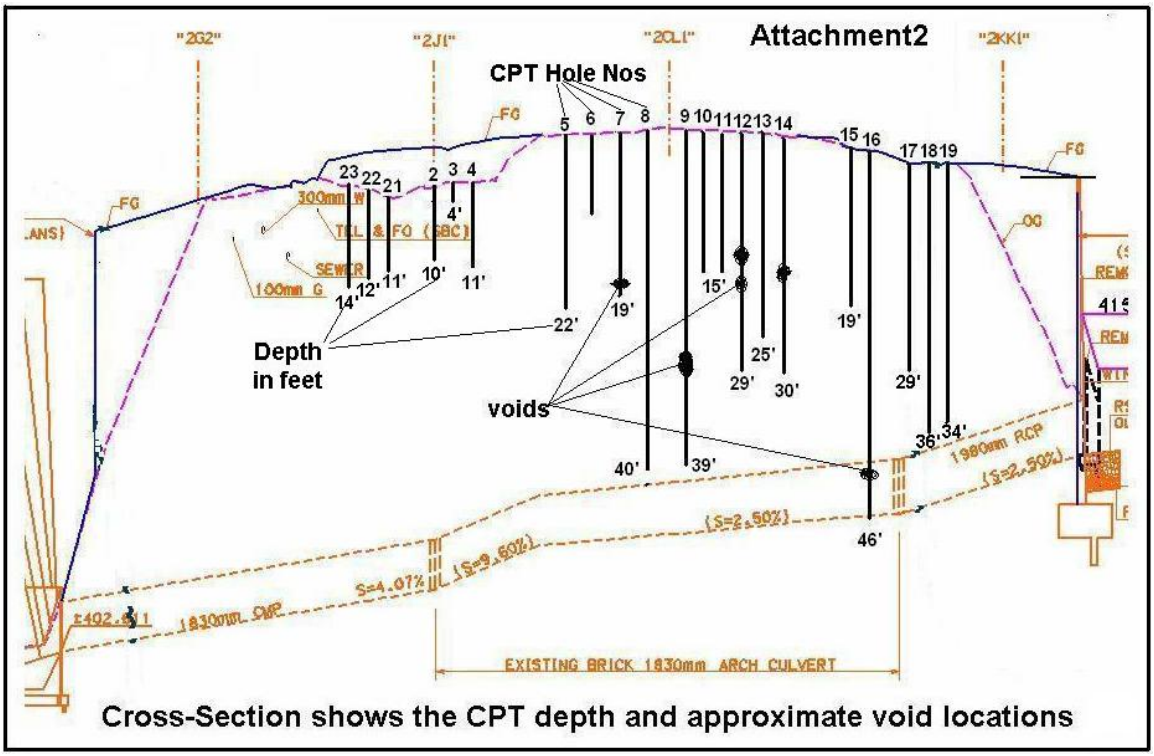

Void Detection in the Roadway Prism by Geotechnical Services with Cone Penetrometer

Exfiltration is the opposite of infiltration and occurs when leaking joints allow water flowing through the pipe to leak into the supporting material. It is not as common as infiltration because many culverts are empty except during peak flows and operate under open channel flow with the hydraulic grade line below the top of the pipe. Examples of where exfiltration may occur include inverted siphons, storm drains and pipes that are designed with the hydraulic grade line above the top of the pipe. Minor leakage may not be a significant problem unless soils are quite erosive.

Piping is a phenomenon caused by seepage along a culvert barrel which removes fill material, forming a hollow similar to a pipe. Fine soil particles are washed out freely along the hollow and the erosion inside the fill may ultimately cause failure of the culvert or the embankment. Besides open joints or a worn invert, the source of seepage may be at the inlet if no headwall or impervious materials were placed. See Index 5.1.2.3.

Voids that develop around culverts which have been in place for a long time are similar to voids around newly installed jacked pipes and tunnels; They may go undetected until the overlying ground collapses into the void loosening this material. This loosened material, which supports the roadway, may immediately cause a depression or sinkhole at the surface, or it may occur at a later date when the loosened material re-densifies with the help of water, traffic vibrations, earthquake shaking, etc. It is not possible to predict when a pipe and/or the roadway prism will collapse.

Therefore, because of the risk and potential of numerous problems associated with voids, the importance of early communication with the Geotechnical Services specialist from the Division of Engineering Services (DES) and coordination with headquarters cannot be over-emphasized. See Index 7.1.6.3.

4.1 END TREATMENT AND OTHER APPURTENANT STRUCTURE REPAIRS AND RETROFIT IMPROVEMENTS

4.1.1 Headwalls, Endwalls and Wingwalls

Selecting an appropriate end treatment for a specific type of culvert and location requires the application of sound engineering judgment. Design guidance for culvert entrances and exits is given in Topics 826 and 827 of the HDM. If bank erosion is evident, or if the proposed repairs reduce capacity, a review of the original design may be warranted, particularly if the original selection was the same standardized type for both the headwall on the upstream end and the endwall on the downstream end. Straight headwalls and endwalls should be limited to locations with low approach and exit velocity not requiring inlet or outlet protection against eddy action. However, at the outlet to some cross culverts in narrow riverine canyons where there is a free outfall, it may be necessary to consider using a straight endwall to prevent erosion.

Improved Entrance to Increase Capacity (Inlet Control)

4.1.2 Outfall Works

If needed, either because the original design was incomplete or the proposed culvert repairs will significantly increase velocity, outfall works should provide a transition for the 100-year flood or design event from the culvert outlet to a section in the natural channel where natural stage, width, and velocity will be restored. Often, some economical and effective armoring in the form of riprap may be applied to the threatened area or appurtenance. Refer to “Hydraulic Design of Energy Dissipaters for Culverts and Channels,” HEC 14 Chapter 5, for more information on estimating scour at culvert outlets and the FHWA sponsored HY-8 Culvert Hydraulic Analysis Program.

HEC-14 describes procedures that can be used to compute scour hole sizes and design internal and external dissipaters and HY-8 incorporates these procedures. The following link provides a design guide for riprap basins level with the stream:

http://onramp.dot.ca.gov/hq/design/drainage/index.php

If an outfall structure is required for transition, it will not typically be a counterpart of that required at the entrance. Wingwalls, if intended for an outfall transition, should not flare at an angle (in degrees from the stream axis) greater than 150 divided by the outlet velocity in feet per second (ft/s). For the 100-year flood or design event, warped endwalls can be designed economically to fit trapezoidal or U-shaped channels, as transitions for moderate to high velocity (10-18 ft/s). For extreme velocity (exceeding 18 ft/s) the transition can be shortened by use of an energy-dissipating structure. At large culverts where stream channel degradation is present, countermeasures may be needed to prevent embankment failures and loss of pipe support at the outlet where the high-energy waterfall can undermine the embankment toe quickly in heavy runoff. HY-8, the FHWA culvert software program provides designs for energy dissipators and follows the FHWA Hydraulic Engineering Circular No.14 method for design.

Energy Dissipator Plunge Pool and Bank Protection at Large Diameter Culvert Outlet

Energy Dissipator with Flared Wingwalls and Bank Protection

Refer to FHWA Culvert Repair Practices Manual Volume 1, Chapter 5, and Volume 2, Appendices B-16 through B-22.

For bank protection design, see Chapter 870 of the HDM.

5.1 PROBLEM IDENTIFICATION AND ASSOCIATED REPAIR FOR CULVERT BARRELS

5.1.1 Concrete Culverts

5.1.1.1 Joint Repair

A discussion on joint requirements and performance is given in Topic 854.1(1) and (2) of the HDM. Table 854.1 provides information to help the designer select the proper joint under most conditions. See Chapter 5- 8.1(a) and (b), FHWA Culvert Inspection Manual for a discussion on misalignment and joint defects. The joint repair strategy should be dependent on the specific type of problem associated with the defect present i.e., misalignment, exfiltration, infiltration, cracks, or joint separation. In addition, pipe diameter will be an important factor to be considered because human entry is usually limited to pipes 30 inches or larger.

5.1.1.1.1 Misalignment

See FHWA Culvert Repair Practices Manual Volume I, pages 3-32, 3-37 and 3-44. Misalignment may indicate the presence of serious problems in the supporting soil. If progressive settlement is present, joint repair should not be performed until a solution to stabilize the surrounding soil has been found. In some cases, reconstruction may be the only option. If so, where there is a need to withstand soil movements or resist disjointing forces, “positive” joints should be specified. Refer to Standard Specifications, Section 61 and Table 854.1 in the HDM.

78 in. RCP with Misalignment **Failed 36" RCP**

If the misalignment is a result of leaking joints and undermining, a determination should be made whether the undermining is due to piping, water exfiltration or infiltration of backfill material and a combination of grouting the external voids and sealing the culvert joints may be warranted using chemical grouting or other joint repair methods that are described in index 5.1.1.1.3. In addition the joint should be specified "watertight" per Section 61 of the Standard Specifications. Further discussion on watertight joints is given in Topic 854.1(2) of the HDM. Further discussion on piping is given in Topics 829.3 and 829.4 of the HDM.

5.1.1.1.2 Exfiltration

Minor leakage may not be a significant problem unless soils are quite erosive. Where exfiltration has resulted in piping, measures should be taken for sealing culvert joints and making them "watertight" in addition to grouting for filling voids in the soil behind the joint as discussed in the previous section. The same techniques used to stop infiltration will also stop exfiltration. For RCP storm drain systems with pipes less than 30 inches or less in diameter, grouting as described in 5.1.1.1.3, or some of the lining methods described under Index 6.1.3, such as cured in place, can be used to stop exfiltration. For larger diameters, internal grouting, PVC repair sleeves, grouting sleeves, internal steel expansion ring gasket joint sealing systems as described in 5.1.1.1.3, or other lining methods described in Index 6.1.3 such as sliplining or lining with CIPP will stop exfiltration.

5.1.1.1.3 Infiltration

Infiltration can cause settlement and misalignment problems if it carries fine-grained soil particles from the surrounding backfill. See Index 5.1.2.3, Soil Migration. In such cases, measures should be taken to seal the joints to make them watertight. It may be possible to use an internal steel expansion ring gasket joint sealing system (see Index 5.1.1.1.3.2) in conjunction with pressure grouting to fill voids in the soil behind the joint. Internal grouting or some of the lining methods described in Index 6.1.3 such as sliplining, or lining with CIPP will also stop infiltration. In general, for culvert repair work, Portland

cement based grout, with and without special admixtures, is usually adequate and much less expensive than the foaming and chemical grouts that are used to resist high external and internal fluid pressures. Internal grouting can be specifically designed to stop infiltration at deteriorated, continuously leaking or open joints. See FHWA Culvert Repair Practices Manual Volume 1, pages 5-37, 6-11, 6-14, and Volume 2, Appendices B-30 and B-26 for procedures on grouting voids and sealing culvert joints. Also see Index 11.1.1.

5.1.1.1.3.1 Chemical Grouting

Internal Chemical Grouted Joint (RCP)

Chemical grouting is a commonly used method for sealing leaking joints in structurally sound, sewer pipes that are under the groundwater table. It will not provide structural repair, and it is inappropriate for longitudinal or circumferential cracks, broken or crushed pipes. However, other methods such as using repair sleeves in combination with chemical grouting are appropriate for such repairs (see discussion towards end of this section). Attempting to seal joints that are not leaking or infiltrating during the sealing process has produced questionable results. Some types of chemical grouts have failed in arid regions where the grout has dried up during periods of low groundwater and in coastal regions where the ground is subject to tidal fluctuations. The long-term service life for chemical grouting is unknown. One study concluded the life expectancy for chemically grouted joints was no more than 15 years, other references indicate a 20 year service life, and it is known to last even longer in other applications such as sealing tunnels and dams.

In non-human entry RCP, chemical grouting is generally accomplished using a sealing packer and a closed circuit television (CCTV) camera. The sealing packer and CCTV camera are pulled through the pipe with cables. Concurrently, air or water testing equipment is used to test the joint and determine the effectiveness of the sealing.

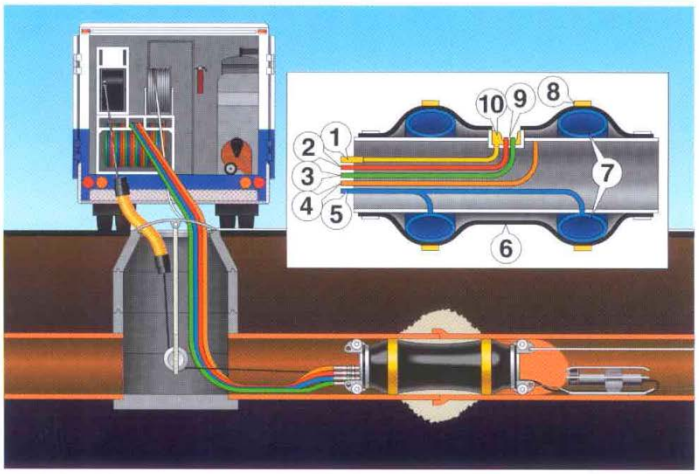

Modern injection packers are very sophisticated, consisting of; (1) Pressure Sensing Line, (2) Chemical "A" Line, (3) Chemical "B" and Air Pressure Line, (4) Sleeve Air Line, (5) End Seal Air Line, (6) Sleeve, (7) End Seal Elements, (8) Sealing Pads, (9) Chemical Injection Ports, (10) Pressure Sensor Element.

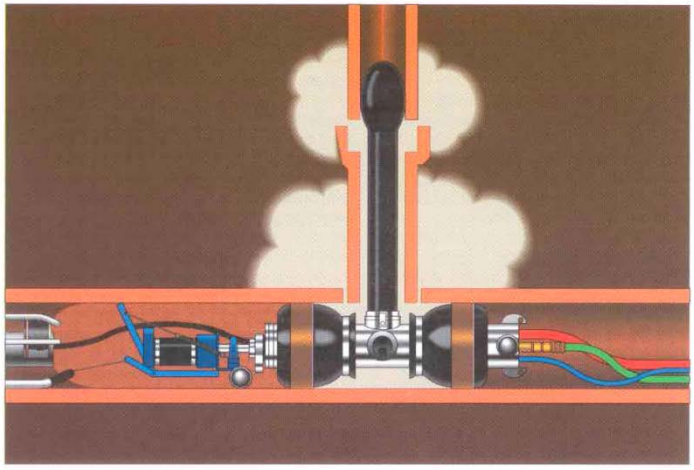

New injection packers can seal lateral connections and the first few feet of service lines with chemical grout quickly and cost-effectively.

In pipes with large enough for human entry, pressure grouting is accomplished using manually placed inflatable pipe grout sealing rings or predrilled injection holes and a hand-held probe (see figure below):

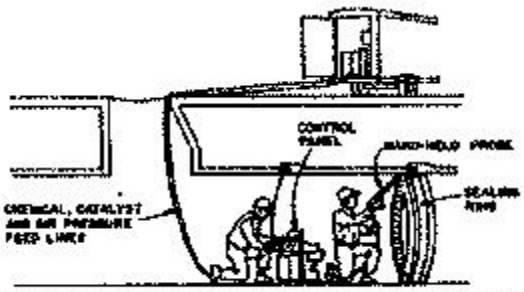

FIGURE 4.4. Typical arrangement for sealing large diameter pipe with grouting rings.

Illustration of Gel Grout Penetrating Outside the Pipe Joint

The two basic groups of chemical grouting materials are gels and polyurethane foams. Polyurethane foam grout forms in place as a gasket and cures to a hard consistency but retains a rubber-like flexibility. The seal takes place in the joint and there is only minimum penetration outside the pipe. The service life of polyurethane foam is not moisture-dependent and therefore it can be considered for use in locations with wet-dry cycles. Gel grouts penetrate outside the pipe and infiltrate the soil surrounding the joint.

The mixture cures to an impermeable condition around the joint area.

The service life of the non-urethane type gels discussed below is moisture-dependent, and therefore these types should not be considered for use in locations with wet-dry cycles.

Urethane gel however, is different from the acrylamide, or acrylate gels in that water is the catalyst and they may be used in locations with wet-dry cycles to form either an elastomeric collar within the pipe joint as well as filling the voids in the soil outside the joint.

Generally the foam grouts are more expensive and difficult to install.

The most commonly used gel grouts are of the acrylamide, acrylic, acrylate and urethane base types. Acrylamide base gel is significantly more toxic in its pre-gelled form than the others but grout toxicities are of concern only during handling and placement or installation and EPA has now withdrawn a long standing proposal that sought to ban the use of acrylamide grouts. Due to its very low viscosity, acrylamide has long been the material of choice to repair underground structures in the sanitary sewer industry. The non-toxic urethane base gels are EPA approved for potable water pipelines because they

use water as the catalyst rather than other chemicals. Because of soil and moisture variability, formulating the correct mixture is largely dependent on trial and error on a case-by-case basis, and is difficult to accurately specify in design.

As of this writing, there are no Caltrans specifications for internal chemical grouting.

It is a good idea to contact a chemical grouting manufacturer and/or contractor for further information. See Appendix E.

5.1.1.1.3.2 Internal Joint Sealing Systems

To seal leaking culvert joints with excessive infiltration and exfiltration, if the pipe is round and large enough for human entry and the external hydraulic head pressure (groundwater) is low (i.e., external head pressure does not exceed 15' above pipe invert at any point) and the internal head pressure (hydraulic grade line) does not exceed 20' above the invert at any point, it may be possible to use an internal EPDM rubber pipe joint sealing system comprising an EDPM rubber membrane, backing plates, spacers, shims, clips, and set screws for the securing rubber membrane across pipe joints. Depending on each individual situation, supplemental grouting may also be needed to fill any voids in the soil behind the joint. Section 15-6.05 includes specifications for installing EPDM rubber pipe joint seals for mechanically sealing internal pipe joints in culverts 24 to 108 inches in diameter. See FHWA Culvert Repair Practices Manual Volume 2, pages B-111 to B-116.

Any joint gaps, low areas and deep imperfections of the pipe periphery are filled with cement mortar or epoxy and on each side of the joint where the seating surface band location of the seal is to be located and rendered flush with the surrounding joint surface in compliance with the manufacturer's recommendations.

If abrasion protection is needed, it may be necessary to cover the steel expansion ring with concrete, shotcrete or other authorized material.

Manufacturer’s claims regarding the range of application for internal joint seals varies widely. For the purposes of design, the following recommendations are suggested for Caltrans facilities. Situations beyond these suggested ranges may be discussed with the District Hydraulic Unit or Headquarters Office of Highway Drainage.

Internal mechanical pipe joint seals should not to be used where the joint gap exceeds 2" for tongue and groove RCP (i.e., physical separation of pipe ends). However, the maximum allowable gap may be increased by 1-1/2" for both indicated situations if a back-up plate used. Furthermore, internal mechanical pipe joint seals should not to be used where the joint offset exceeds 1/2" for pipe 36" diameter and below, or 3/4" for pipe larger than 36" diameter.

AMEX-10/WEKO-SEAL Internal Joint Sealing System Examples Above.
(Courtesy Of Miller Pipeline).

One method for sealing joints uses a jacked-in-place PVC repair sleeve combined with O-rings and annular space chemical or cementitious grouting. PVC repair sleeves range from 36 inches to 100 inches in diameter.

A third option may be to use "grouting" sleeves ranging from 12 inches to 54 inches in diameter. Grouting Sleeves have a stainless steel core surrounded by an absorbent gasket which is soaked in an expanding Polyurethane foam grout which bonds the repair sleeve to the host pipe upon contact with water or air by filing the annular space between the structural stainless steel core and the host pipe. At each end is a closed cell Polyethylene End Sealer. Both of these repair sleeves are discussed in FHWA Culvert Repair Practices Manual Volume 2, pages B-155 to B-159, however, the information above supercedes the size range and grouting information presented. For manufacture contact information, see Appendix E.

Examples of Internal Joint Sealing Systems include: the HYDRA-Tight Seal by Hydra-Stop, In-Weg Internal Seals by J. Fletcher Creamer and Son, Depend-O-Lok by Brico Industries, Link-Pipe PVC Sleeve and Link-Pipe Grouting Sleeve. All of these systems are non-structural. Also see Index 6.1.2 for grouting voids in the soil envelope.

5.1.1.1.4 Cracked and Separated Joints

Cracked joints are more than likely not watertight even if gaskets were used. However, if no other problems are evident, such as misalignment, and the cracks are not open or spalling, they may be considered a minor problem to only be noted in inspection. Severe joint cracks are similar in significance to separated joints. Separated joints are often found when severe misalignment is found. In fact either problem may cause or aggravate

the other. Embankment slippage may also cause separations to occur. An attempt should be made to determine whether the separations are caused by improper installation, undermining, or uneven settlement of fill. If undermining is determined, an attempt should be made to determine whether the undermining is due to piping, water exfiltration, or infiltration of backfill material. It may also be necessary to test the density of the surrounding soil.

RCP Examples With Joint Separation, Missing Seal and Backfill Loss

Refer to the previous discussion under *misalignment, exfiltration and infiltration* for joint repair considerations. See Indices 5.1.1.1.1, 5.1.1.1.2, 5.1.1.1.3 and 5.1.1.1.3.2.

5.1.1.2 Cracks

For culverts that have been newly installed and backfilled, cracks should not exceed 0.01 inch in width in severely corrosive environments (pH of 5.6 or less, water containing vegetal or animal wastes, seawater, or other water with high concentration of chlorides). Conversely, for culverts installed in a non-corrosive environment (neutral pH close to 7, low concentrations of salt, vegetal or animal wastes), cracks of up to 0.1 inch in width of the installed pipe are acceptable if they are not excessive in number.

For all culverts cracks less than 0.01 inch in width are minor and only need to be noted. Cracks greater than 0.01 inch in width but less than 0.1 inch should be noted as possible candidates for routing a 0.25 inch wide minimum by 0.5 inch deep maximum V-Grind, then patching or sealing (see Appendix D). Cracks greater than 0.1 inch in width may indicate a serious condition and the Underground Structures Unit within the Division of Engineering Services should be contacted.

Circumferential Cracking **Longitudinal Cracking**

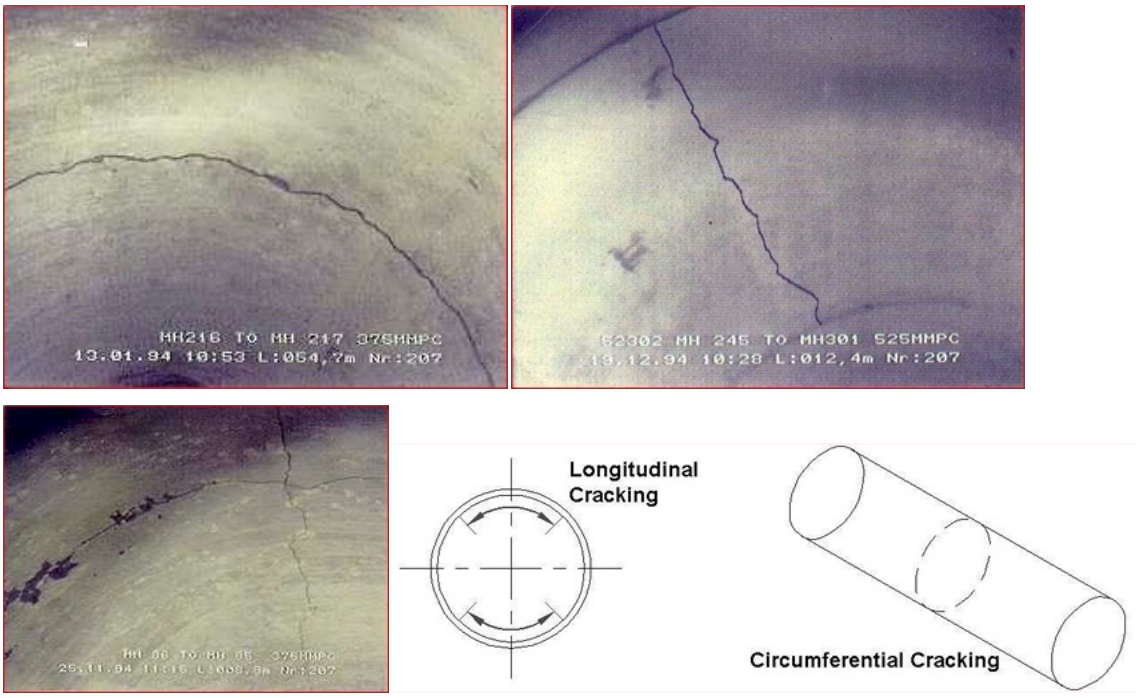

Typical Locations for Longitudinal Cracking can be Found in the Crown and Invert.

5.1.1.2.1 Longitudinal Cracks

See FHWA Culvert Repair Practices Manual Volume 1, page 3-45.

Longitudinal cracking in excess of 0.1 inch in width may indicate overloading or poor bedding. If there is no soil loss associated with cracking in excess of 0.1 inch, rehabilitation may be considered.

See Figures 3.16 and 3.17 in FHWA Culvert Repair Practices Manual Volume 1 for the results of poor and good side support, the deformation of cracked pipes, the cause of the deformation and the visible effects. It should be noted that reinforced concrete pipe may fail (see Index 2.1.1.1.1) but will rarely “collapse”.

There is a choice of materials that may be used to repair cracks. The materials generally may be categorized as either flexible crack fillers or rigid materials that are more permanent that may create a structural repair. The latter group includes both Portland cement-based mortar (for cracks greater than 0.01 inch which must first be routed out) and structural adhesives that provide tensile and shear strength including epoxy systems that may be filled with a powder or unfilled. See Appendix D, and FHWA Culvert Repair Practices Manual Volume 2, Appendix B-25 for information on crack sealing with cement mortar or epoxy adhesive. Other options for repair may be to use one of the repair sleeves or chemical grouting using a hand held probe as described in Index 5.1.1.1.3.

See Caltrans Standard Specification Section 95: Epoxy, in conjunction with “Repair by Injection of Epoxy Adhesive” guidelines given in above-referenced Appendix B-25.

Pipe diameter will be an important factor to be considered when repairing individual cracks because human entry is usually limited to pipes 30 inches or larger. For smaller diameter, non human-entry pipes, consideration should be made for the use of a slip liner.

See FHWA Culvert Repair Practices Manual Volume 1, page 6-24 and Volume 2, Appendix B-39, B-40, Index 6.1.3.1 of this D.I.B. for general sliplining procedures and Caltrans Standard Special Provision No. 15-6.10 for sliplining using Plastic PipeLiners".

If diameter reduction is a concern, lining options may include use of a cured in place resin-impregnated pipeliner (pipes 12 inches to 108 inches diameter). See Index 6.1.3.2.

It should be noted that regardless of the lining method chosen, the lining itself does not need to provide load carrying ability or independent structural support; if the host pipe is not capable of doing this, it should be replaced. See Index 6.1.1, Caltrans host pipe structural philosophy. Replacement due longitudinal cracking should be considered as a final option and will be dependent on consultation with the Division of Underground Structures within the Division of Engineering Services. See Indices 5.1.1.2 and 11.1.1.

5.1.1.2.2 Transverse Cracks

Poor bedding and/or poor installation may cause transverse cracks. Cracks may occur across the top of pipe when settlement occurs and rocks or other areas of hard foundation material near the midpoint of a pipe section are not adequately covered with suitable bedding material. Section 19-3.03D (Foundation Treatment) of the Standard Specifications addresses situations when solid rock or other unyielding material is encountered. For repairs of transverse cracks, the same discussion of crack sealing and lining and other options for repairs as outlined under longitudinal cracks in Index 5.1.1.2.1 apply to repairing transverse cracks.

See FHWA Culvert Repair Practices Manual Volume 1, page 3-47.

5.1.1.3 Spalls

Spalls (fractures) often occur along the edges of either longitudinal or transverse cracks when the crack is associated with overloading or poor support rather than tension cracking. For Spalls associated with cracks, the cause of cracking should first be determined.

If the cause is construction overloading, clean around the spall and apply a mortar patch. See FHWA Culvert Repair Practices Manual Volume 2, Appendix B-28 for more information on patching concrete. Also rout out the crack (if over 0.01 inch) to a depth of at least 0.5 inch and grout the crack. If the cracking is due to post construction loading, either the loading must be reduced, or the pipe should be replaced by another, which is capable of supporting the applied load.

Spalling can also be caused by corrosion of the steel reinforcing when corrosive water is able to reach the steel through cracks or shallow cover. As the steel corrodes, the oxidized steel expands and causes the concrete covering the steel to spall. It must be determined where the corrosive material is coming from (i.e., interior or exterior or both). If it is coming from the interior only, chip back around the spall and sandblast steel to remove the rust and apply mortar patch. In strongly acidic environments, such as drainage from mines or caustic water, various applied coatings (thermoplastic flame sprays, for example) or full-length sliplining may be warranted. See Index 5.1.1.2.1 for pipe liner references.

If the corrosive material is coming from both the interior and exterior, patch as indicated for the interior, but monitor the culvert to determine the rate of degradation for timing of future replacement.

If the spalls are caused by debris (logs, boulders, etc.), it is recommended to clean around the spalled area and apply a mortar patch, assuming no other damage is present.

See FHWA Culvert Repair Practices Manual Volume 1, page 3-47.

5.1.1.4 Slabbing

The terms slabbing, shear slabbing, or slab shear refer to a radial failure of concrete that occurs from straightening of the reinforcement cage. It is characterized by large slabs of concrete "peeling" away from the sides of the pipe and a straightening of the reinforcement due to excessive deflection or shear cracks. Slabbing is a serious problem that may occur under high fills with reinforced concrete pipe of inadequate D-load strength and/or an inadequate depth of bedding on a rock foundation.

It may also occur under poor consolidation/backfill conditions with a high water table.

If it is determined that the culvert is structurally stable, the primary concern is protection of the inner (and exposed) layer of steel reinforcing against corrosion.

Clean around the damaged area, chip back and sandblast steel to remove the rust and apply mortar patch. In strongly acidic environments, such as drainage from mines or caustic water, various applied coatings (thermoplastic flame sprays, for example) or full-length sliplining may be warranted. See Index 5.1.1.2.1 for pipe liner references. See FHWA Culvert Repair Practices Manual Volume 2, Appendix B-28 for more information on patching concrete.

If the slabbing is due to post construction loading, either the loading must be reduced, or the pipe should be replaced with one capable of supporting the applied load. Refer to Standard Plans A62D and A62DA for the allowable minimum classes of RCP and D-load verses cover, and Section 19-3.03D (Foundation Treatment) of the Standard Specifications when solid rock or other unyielding material is encountered. See FHWA Culvert Repair Practices Manual Volume 1, page 3-47.

5.1.1.5 Invert Deterioration/Concrete Repairs

Worn RCP Invert with First Exposure of Reinforcing Steel and Severely Worn RC Arch Invert

The inverts of precast concrete culverts are normally quite durable to damage. However, abrasion can be a serious problem in mountain areas where moderate-to-large sized rock is carried by fast moving water. When the water velocity that is generated by the 2-5 year return frequency flood is greater than 8 ft/s, and the upstream channel has an abrasive bed load, abrasion related problems can be expected. See HDM Table 855.2A (abrasion levels 4 - 6).

Deteriorated inverts in precast concrete culverts generally require paving to restore them to an acceptable functional condition. In order to accomplish this, and to dry the invert, it will be necessary to divert any flows present and/or perform the work during the summer for non-perennial streams and channels. For human entry pipes, guidelines for shotcrete/gunite paving, lining, and repairs, and invert paving are provided in appendices B-11 and B-29 of FHWA Culvert Repair Practices Manual Volume 2. Also, see HDM Indices 853.5 and 853.6, Table 855.2F and Sections 15-6.04 and 15-6.14 of the Standard Specifications for concrete invert paving and cementitious pipeliners . For smaller diameter RCP with invert deterioration, trenchless robotic applicators for cement mortars indicated in HDM Table 855.2F may be considered. See Authorized Materials List for Cementitious Pipeliners and Concrete Invert Paving:

http://www.dot.ca.gov/hq/esc/approved_products_list/

Standard Mortar (Section 51-1.02F of the Standard Specifications) is not recommended for Abrasion Level 4 or higher. See Appendix H for a concrete invert paving design example (RCP).

5.1.1.6 Crown Repair/Strengthening

Failed Crown in Reinforced Concrete Box Culvert

Precast concrete culverts may sustain damage in their crown section due to the depth of cover being too shallow to adequately support and distribute vehicle live loads. The result may be cracking, spalling and distortion in the crown area. Some information on procedures that may be used to repair such problems is provided in Appendix B-37 of FHWA Culvert Repair Practices Manual Volume 2. For severe cases of crown deterioration (see photo), replacement may be necessary.

5.1.2 Corrugated Metal Pipes and Arches

The primary factors that affect corrugated metal pipe (CMP) and pipe arch culverts are corrosion, and abrasion which in turn may lead to: (1) joint defects, (2) invert deterioration, (3) shape distortion, and (4) soil migration. See Indices 2.1.1.2.1, 2.1.1.3.2, 2.1.2, and 2.1.2.1-3 for material characteristics, coatings and service life discussion relative to the deteriorating factors to metal pipe.

At steel pipe sites where abrasion is present, once the galvanizing layer has been worn away, corrosion will occur, followed by eventual perforation of the invert and loss of surrounding backfill soil. This in turn may lead to shape distortion depending on the compromise to the soil-pipe interaction resulting from the migration of backfill fines.

Aluminum corrodes differently than steel and is not susceptible to corrosion attack within the acceptable pH range of 5.5-8.5. Abrasion potential is dependent upon, volume, velocity, size, shape and hardness of bedload. Culvert flow velocities that frequently exceed 5 ft/s are only allowable for low volumes of smaller, rounded bedload. In non-corrosive environments, Aluminum pipes may abrade quicker than steel and are not recommended in an environment where the velocity frequently exceeds 5 ft/s and if angular or large sized bedload material is present. See Indices 2.1.2.2, 2.1.2.3 and HDM Index 852.4(2)(a) through (e), prior to selecting aluminum as an allowable alternative.

5.1.2.1 Joint Repair

A discussion on joint requirements and performance is given in Topic 854.1(1) and (2) of the Highway Design Manual. Table 854.1 provides information to help the designer select the proper joint under most conditions. See Chapter 5- 4.2 (b), FHWA Culvert Inspection Manual for a discussion on joint defects. The joint repair strategy should be dependent on the specific type of problem associated with the defect present i.e., misalignment, exfiltration, infiltration, and joint separation. Most of the concerns and

repairs that are outlined in this D.I.B. under the joint repair section for precast concrete pipe also hold true for flexible pipe (i.e., misalignment, exfiltration, infiltration, and joint separation). Joint defects and associated repairs specifically for CMP and pipe arches are discussed in FHWA Culvert Repair Practices Manual Volume 1, pages 6-14 and 6-15. Also see Indices 5.1.1.1.2, and 5.1.1.1.3. Once again, pipe diameter will be an important factor to be considered because human entry is usually limited to pipes 30 inches or larger. If the pipe is still round (i.e., less than 10% deflected), the same EDPM seals described in Index 5.1.1.1.3.2 for RCP may be used in CMP. When the host pipe is corrugated metal, the EPDM seal must have a smooth surface on both sides with no extrusions. See detail below.

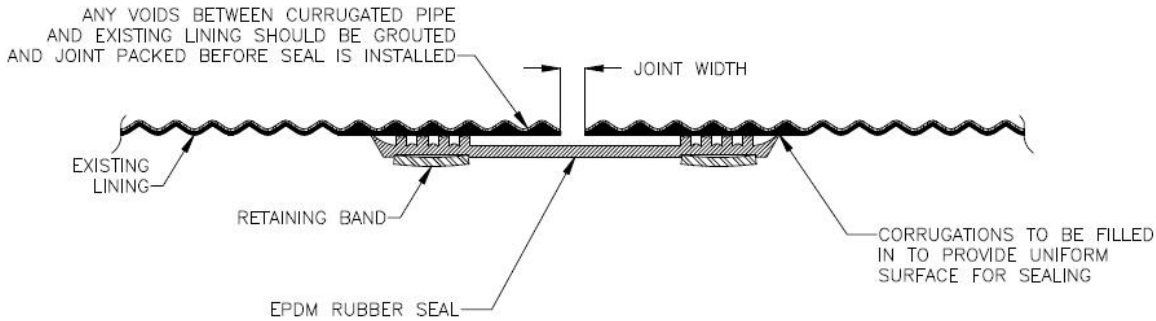

DETAIL B: EXISTING LINING FOLLOWS CORRUGATED PROFILE

If abrasion protection is needed, it may be necessary to cover the steel expansion ring with concrete, shotcrete or other authorized material. Section 15-6.05 includes specifications for installing EPDM rubber pipe joint seals onto the interior of an existing pipe or culvert 24 to 108 inches in diameter, creating a circumferential leak resistant seal at the joints.

Separated Joint CMP with Physical Separation of Pipe Ends

A variety of external loads and changing soil conditions may cause joints to open allowing backfill infiltration and water exfiltration, however, this is unlikely if the proper bands are used. Key factors in the inspection of joints are indications of backfill infiltration and water exfiltration causing erosion of surrounding soil resulting in surface holes or pavement deflections. See Index 11.1.1.

Sink Hole Damage (Location Unknown) **Loss of Backfill Fines**

5.1.2.2 Abrasion and Invert Durability Repairs

Abrasion of the pipe wall occurs through the action of materials carried in flow (bedload) impacting on the pipe wall. It is affected by the frequency of abrasive loads in the flow and velocity of the flow (5 ft/s or greater). Obviously the amount, type and size of material carried and frequency of the flow have a significant impact on the life expectancy of the pipe, as does the material composition of the pipe itself.

Examples of Abrasive Bedload Types

One of the most common problems with corrugated metal culverts is deterioration of the invert, usually due to a combination of corrosion and abrasion once the galvanizing layer has been worn away. It is for this reason that corrugated steel culverts are frequently coated with an asphaltic or other type of protective coating. However, in HDM Table 855.2C, with the exception of polyethylene (CSSRP), towards the upper end of the flow velocity range for moderate abrasion, these coatings are generally ineffective and alternative invert materials are recommended. See HDM Index 855.2 Abrasion, and Indices 2.1.2.1, 2.1.2.2, and 2.1.2.3, for corrosion and abrasion influences that must be included in any estimation of service life. If these influences have been overlooked or

inadequately addressed during the original design, eventually the coatings are abraded or broken away, and corrosion that attacks the bare steel is accelerated by abrasion that constantly removes the somewhat protective oxide layer formed by corrosion.

Continuation of this action, if unchecked, will ultimately lead to loss of the invert and the creation of voids under and around the culvert (see pictures below and Appendix G – Example 1).

Corrosion Accelerated by Abrasion Causing Invert Loss and Void Below

Worn Invert on Leading Edge (To Flow) of Corrugations Caused by Abrasion

Since a corrugated metal pipe is classified as a flexible structure that requires interaction with soil for stability, loss of the invert may result in severe distortion and collapse of the culvert (see Index 11.1.1).

Thus, repairs for severely deteriorated inverts in large diameter metal culverts must include:

- Structural repairs that restore the structural capacity of the culvert to resist circumferential thrust loads
- Re-establishing the connection between the soil and the pipe by filling voids immediately on the backside of culverts with low strength pressure grout mix. This will tend to crack rather than build an undesirable 'block'. Refer to Index 6.1.2 and page B-135 of FHWA Culvert Repair Practices Manual Volume 2, for procedures for grouting voids behind and under culverts.

See Appendix G for case studies of structural repairs and filling voids on the backside.

Many types of repairs and corrective action may be taken to alleviate or minimize future invert durability problems. In most cases, the material selection should be both abrasion and corrosion resistant. Plastic slipliners are an effective rehabilitation method primarily for smaller pipe sizes in both abrasive and corrosive environments; they are available in a broad range of dimensions and joint type selections. See Index 6.1.3.1.1. and Appendix H for a design example.

If access is limited, or the reduction of pipe cross sectional area resulting from sliplining is unacceptable, it may be necessary to use an alternative lining method such as cementitious pipeliners or CIPP. See Indices 6.1.3.6.2, 6.1.3.2, and HDM Table 855.2F.

In general, for pipes large enough for human entry with invert durability problems, sliplining should not be the first choice. Instead, invert paving should be the first choice to restore or replace weakened inverts. See Index 5.1.2.2.1 below. As an alternative in situations where the abrasion level is high, steel armor plating can provide increased resistance to abrasion and impact damage. See HDM Table 855.2F and Index 5.1.2.2.3.

5.1.2.2.1 Invert Paving

One of the most effective ways to rehabilitate corroded and severely deteriorated inverts of CMP and SSPP is by paving with reinforced concrete**,** shotcrete or other approved materials from the authorized materials list posted on METS website:

http://www.dot.ca.gov/hq/esc/approved_products_list/pdf/cementitious_culvert_linings.pdf

See HDM index 853.6 and Appendix H for a design example. If abrasion is present, and if concrete is selected within SSP 15-6.04, a compressive strength of 6000 psi at 28 days should also be selected. For non-human entry CMP with invert deterioration, trenchless robotic applicators for cement mortars indicated in HDM Table 855.2F may be considered for a 360 degree application. Standard Mortar (Section 51-1.02F of the Standard Specifications) is not recommended for Abrasion Level 4 or higher, however, a geopolymer mortar has approximately the same abrasion resistance as concrete and calcium aluminate mortar is significantly more resistant to abrasion than concrete. See HDM Tables 855.2 E-F. See Index 6.1.3.6.2.

The maximum grading indicated (1.5 inch) for coarse aggregate may need to be modified if the concrete must be pumped. The abrasion resistance of cementitious materials is affected by both its compressive strength and hardness of the aggregate. There is a correlation between decreasing the water/cement ratio, increasing compressive strength and increasing abrasion resistance. Therefore, where abrasion is a significant factor, the lowest practicable water/cement ratios and the hardest available aggregates should be used.

A typical design detail for concrete invert paving is shown below for situations with minimal loss of the invert (i.e., some perforations, but not complete invert loss) that do not require an extensive structural connection between the invert paving and the host pipe. Paving thickness may range from 2 inches to 13 inches depending on the abrasiveness of site.

For extremely abrasive conditions (i.e., Level 6 in HDM Tables 855.2A and 855.2F) alternative materials are recommended to reduce the significant paving thickness required for concrete to achieve a 50-year maintenance free service life. HDM Table 855.2F provides guidance on minimum material thickness to achieve a 50-year maintenance free service life. See photo below for an example of abrasion level 6 where insufficient concrete invert paving thickness was placed. Per HDM Table 855.2F, abrasion levels 5 and 6 require over 12 inches of concrete to achieve a 50-year maintenance free service life, however, 3-5 inches of calcium aluminate abrasion resistant concrete (or mortar) is equivalent. For composite sections, a "raked" finish is preferred to provide a good mechanical bond area for calcium aluminate concrete to mechanically key into the concrete. See photo. When applied directly to the invert, WWM should be tack welded to the host pipe for improved bonding.

Invert paving sections typically vary from 90 to 180 degrees for the internal angle depending on the extent of the deterioration on both sides of the pipe. In the detail below, the designer opted to provide a flattened invert for additional thickness and to spread the abrasive stream bedload.

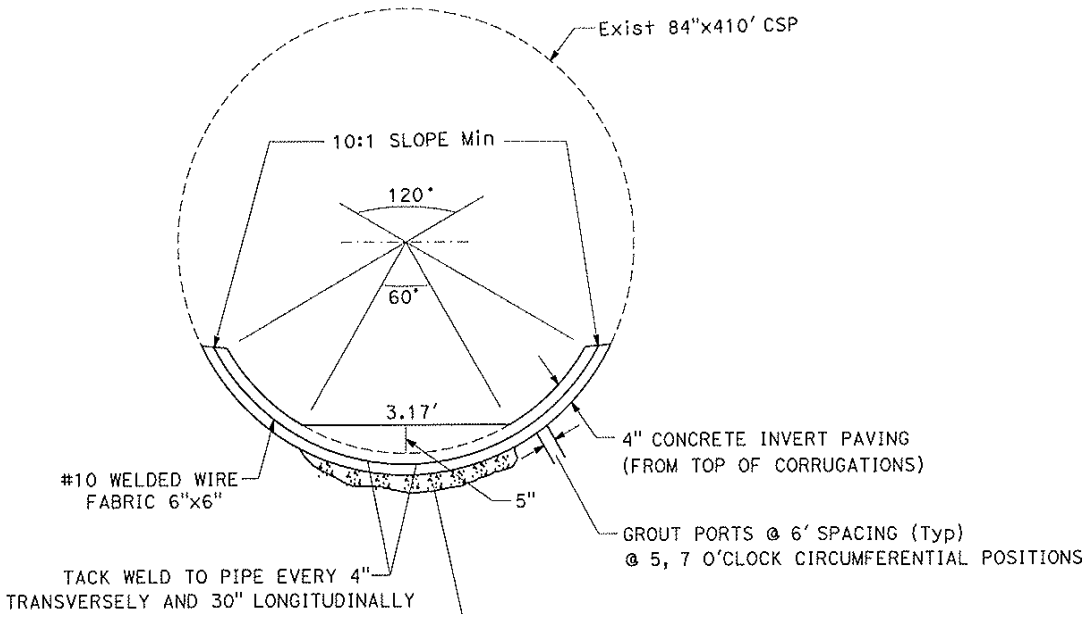

(Above) Example of Insufficient Concrete Invert Paving Design Thickness for Abrasion Level 6

Concrete Section **Composite Section with Calcium Aluminate**

For situations where there is significant loss of the pipe invert (see picture on page 49), it will be necessary to tie the concrete to the more structurally sound portions of the pipe

wall in order to transfer compressive thrust of culvert walls into the invert slab using the general procedures outlined in HDM Index 853.6. See detail under Index 6.1.2.1, and Appendix H, Design Example 2.

See Appendix B-11, FHWA Culvert Repair Practices Manual Volume 2, for procedures for shotcrete/gunite paving, lining, and repairs (all human entry). See Appendix B-29, FHWA Culvert Repair Practices Manual Volume 2, SSP 15-6.04 Invert Paving and HDM Index 853.6 for specifications and procedures for invert paving.

When using the general procedures outlined in HDM Index 853.6, consultation with the Headquarters Office of Highway Drainage Design within the Division of Design, the Corrosion Technology Branch within Materials Engineering and Testing Services (METS) to determine the more structurally sound portions of the pipe wall, and the Underground Structures unit in the Division of Structures within the Division of Engineering Services (DES) is advised.

See Appendix G for some large diameter invert paving case studies. Because every site is unique, no 'one size fits all' for determining the thickness, paving limits and geometry of concrete invert linings. See HDM table 855.2F. The procedures outlined in Appendix H, Design Example 2, should be followed and the following details and standard special provision (SSP) references should be reviewed for inclusion in the bid package:

15-6.04 Concrete Invert Paving

15-6.02 Fill Culvert Voids

15-6.03 Contact Grouting (if host pipe is metal)

XS-17-060-1 Corrugated Metal Culvert: General Procedures for Invert Repair

XS-17-060-2 Corrugated Metal Culvert: Details for Invert Repair

For cement slurry and contact grout materials, host pipe cleaning, inspection and numerous contractor submittal requirements, review Section 15-6 of the Standard Specifications.

For human entry pipes that are determined to be in abrasion level 6 (or higher), consult with District Hydraulics to consider using concreted RSP or other abrasion resistant layer special designs with, or in lieu of, concrete to achieve 50 years of maintenance free service life.

5.1.2.2.2 Invert Paving with Concreted Rock Slope Protection (CRSP) or Calcium Aluminate Abrasion Resistant Concrete

Concreted Rock Slope Protection (CRSP) **Calcium Aluminate Abrasion Resistant Concrete**

These methods are generally limited to large diameter culverts with $Q_{2\text{-}5}$ velocity greater than 14 ft/sec and an abrasion level of 6. Lining the culvert barrel invert with concreted RSP can provide an effective countermeasure to abrasion and increase barrel roughness thus decreasing velocity within the barrel. A nominal strength of 4500 psi may be used in the concrete. The rock size may vary. However, it is imperative to achieve adequate rock embedment (i.e., 75% min.) into the concrete. At the culvert ends, a smooth transition back to the channel bed profile should be provided with adequate embedment to prevent undermining.

5.1.2.2.3 Steel Armor Plating

In locations with severe abrasion (see Index 2.1.2.3) a viable option to invert paving with concrete may be to armor plate the invert with steel plates (thickness between 0.25 inch and 0.50 inch). See HDM Table 855.2F. This method is used in large diameter pipes that can accommodate a reduction in waterway area. The smooth, wide invert spreads wear over a greater area and is less of an impediment to flow than corrugated metal. It is important to securely attach steel armor plates to the host pipe. See 03-Nev-49 pictures below of 0.375 inch thick steel armor plate example at Shady Creek that replaced a concrete invert lining.

Finished 0.375-inch Thick Steel Plate Invert **Workers Placing Steel Plates (See Detail Below)**

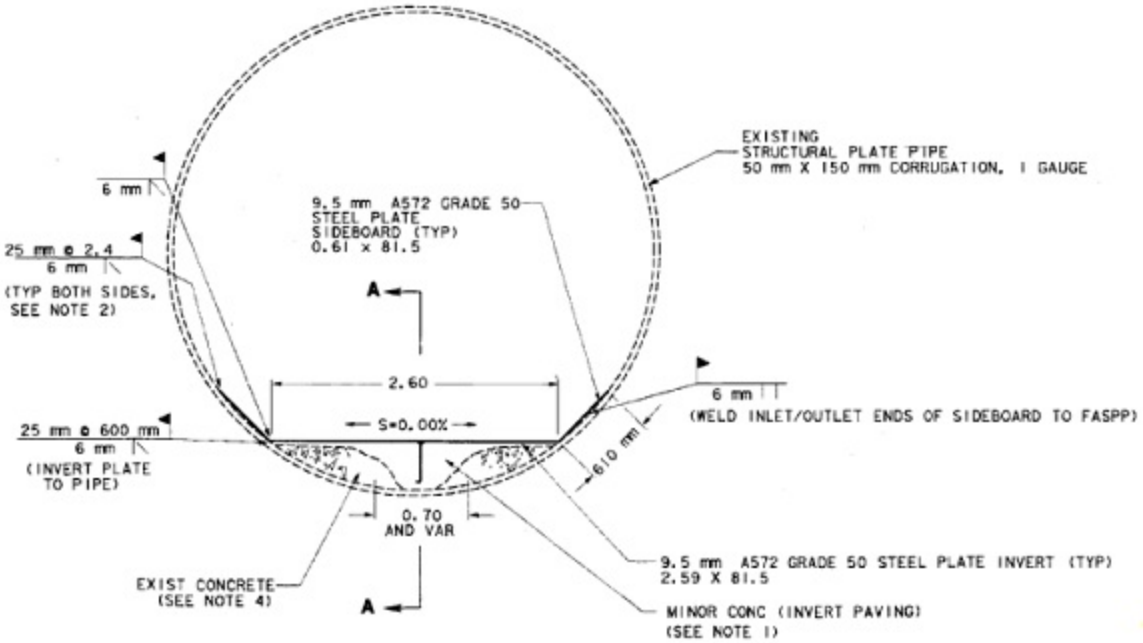

Example Steel Armor Plating Detail. To prevent piping under the steel plate, it is important to provide end treatment details – particularly at the upstream end. See details below and post-construction photo of 120 inch SPP on Sbd 330 where end treatment was not part of the design.

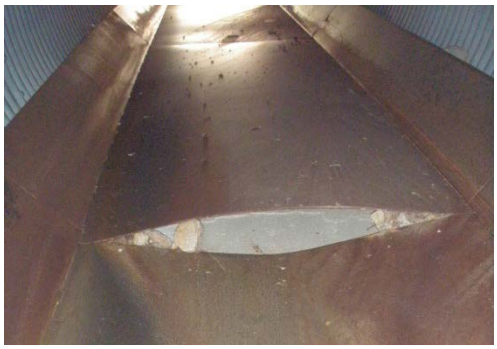

Insufficient Anchorage with No End Treatment

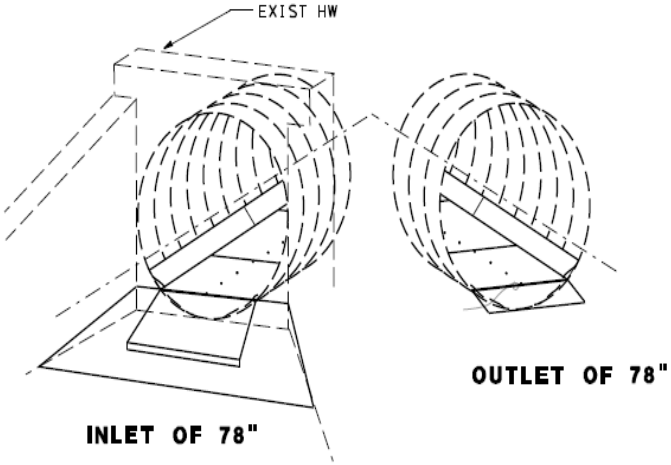

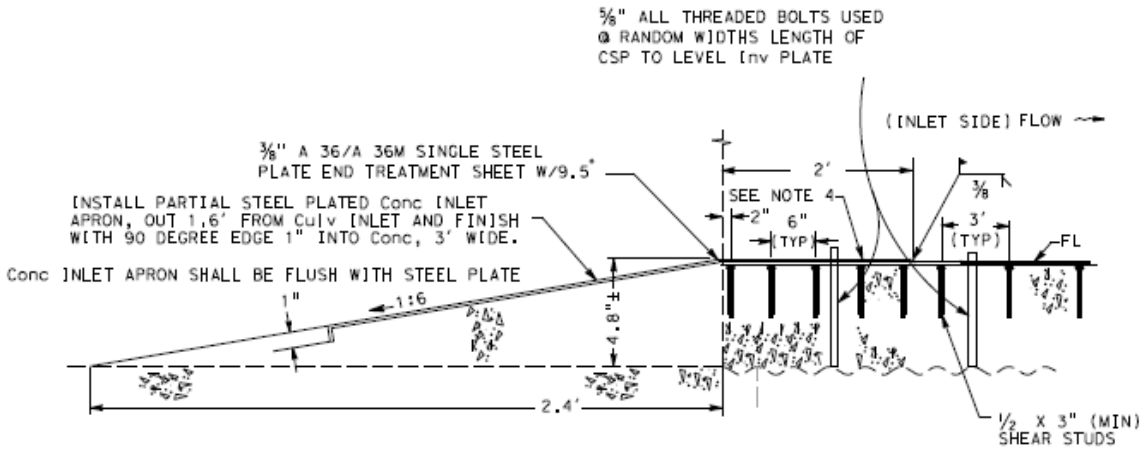

Steel Plate and Concrete Apron End Treatment (Inlet)

Several other materials that have been successfully used to plate inverts subject to abrasion include guardrail elements, railroad rails and bridge deck grating.

5.1.2.2.3.1 Welded Steel Pipeliners

Welded steel pipeliners are available in round, arch and elliptical shapes and can be custom made for special shapes. The custom design sizes range from 26" to 180" and larger in diameter and up to 1" thick. Standard sizes 24" and smaller are available from stock, however, more commonly this repair method is used as a structural repair solution for large diameter (human-entry) metal pipes that are corroded on the backside throughout the circumference and where invert paving within the lower 180 degrees is insufficient. These installations are considered to be part of the sliplining family, however, unlike plastic pipeliners, in all sizes they may be considered for structural repairs. Per Index 6.1.1, if the host pipe cannot be made capable of sustaining design loads, it should be replaced rather than rehabilitated. Per Index 7.1.6.1, any re-lining project that proposes to utilize large diameters should be treated as a special design and consultation with the Headquarters Office of Highway Drainage Design within the Division of Design and the Underground Structures unit in the Division of Structures within the Division of Engineering Services (DES) is advised. See Index 6.1.3.1 and SSP 15-6.06 and examples below.

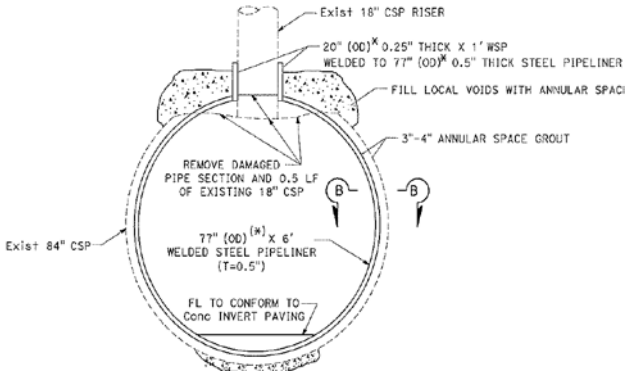

Various Welded Steel Pipeliner Structural Repair Installations (InfraSteel®. Courtesy of Precision Pipe & Products, Inc.)

5.1.2.3 Soil Migration

Backfill Fines Infiltrating Through CMP Joint

When the pipe is located beneath the ground water level, consideration must be given to the possibility of loss of side support through soil migration (the conveying by groundwater of finer particle soils into void spaces of coarser soils). Generally, migration can occur where the void spaces in the pipe backfill are sufficiently large enough to allow the intrusion of eroded fines from the trench sidewalls. For migration to occur, the in-situ soil must be erodible, and there must be a flow path for the water. Normally, erodible soils are fine sands and silts and special clays. This situation is exacerbated where a significant gradient exists in the ground water from the outside of the trench towards the inside, i.e., the trench must act as a drain, and/or the pipe joints are not watertight (see Highway Design Manual 854.1(2) – Joint Performance – Watertight Joint).

As a remedial measure for such anticipated conditions, depending on the amount of shape distortion, cementitious grouting, or a combination of expansion rings (refer to previous discussion for sealing culvert joints with expansion ring gaskets or repair sleeves under Index 5.1.1.1.3.2), and Slurry Cement pressure grouted backfill in lieu of Structure Backfill, or a combination of Structure Backfill with Filter Fabric (only if external access is feasible) is recommended. See Index 6.1.2. Grouting Voids in Soil Envelope. Also see appendices B-26 and B-34, FHWA Culvert Repair Practices Manual Volume 2 for procedures for sealing culvert joints and repair at a distorted section.

5.1.2.4 Corrosion

In a study conducted during the mid 1950's in District 1 where approximately 7000 culverts were inspected, the majority of the metal corrosion in culverts throughout the District occurred in the invert and was usually due to acidic water. In most cases of accelerated failure of the culvert metal, corrosion was found to be the primary factor caused by groundwater flowing on a continuous basis and emanating from poorly drained, waterlogged soil with anaerobic bacteria present.

Corroded inverts in metal pipe will visually appear much differently than those worn by abrasion. Corrosion will first manifest itself inside the culvert as rust with nodules and pitting. See first photo below. The first perforations may appear in a much wider area related to the flow-line compared to when abrasion is the primary wear factor. For example, in the middle photo below, the first perforations are occurring on either side at the outer edge of the darker wear zone. The wear pattern of a severely corroded CMP invert will appear to have rough edges and often has strands of metal remaining at 6 o'clock. See third photo below.

Progressively Corroded CMP Inverts

The dark, stained, wear zone present in most worn metal pipes usually indicates the limit of exposed steel where the galvanizing layer has worn away. Even in nonabrasive flows, most galvanizing exposed to frequent flow generally lasts a maximum of 10 years.

Corrosion on the backside may be present if rust stains inside the pipe are present around joints and seams outside (i.e., above) the general flow zone. See third photo above.

A quick, approximate method for evaluating metal loss is to strike a geologist's pick hammer and compare the penetration or rebound with a nearby location that is close to the original gage thickness (usually in the upper section above mid-point of the culvert).

Contact the Corrosion Technology Branch within DES for a detailed investigation.

There are several types of corrosion leading to failure in pipes – atmospheric, microbiological and galvanic corrosion. Any of these types of corrosion are influenced by the structure of the soil, but the most commonly used criteria to indicate relative corrosivity to steel are the pH or hydrogen iron concentration, the specific electrical resistance, and the chloride and sulfate content of both soil and water. Other factors that can influence the corrosion rates are the effects of industrial effluents from either commercial or residential sources or stray electrical currents in close proximity to the pipe. Stray current sources include electricity transmission lines, electrified rail lines and the like.

In general, in areas of high rainfall, the soils tend to be acidic and of high electrical resistivity. Acid soils are generally regarded to be corrosive, while a high electrical resistivity is indicative of low corrosivity. Some typical values of the resistivity of soils and waters are shown in Appendix C (Table 5-1). Table 5-2 in Appendix C shows a rating of the soils corrosivity as determined by specific electrical resistance. Visual indications of the relative corrosivity of various soil types are shown Table 5-3 of Appendix C.

Corroded Steel Pipes

Refer to Indices 2.1.1.2.1 and 2.1.1.3.2 for a discussion on how service life is estimated relative to pH and coatings for metal culverts.

5.1.2.4.1 Human Entry

One of the most effective ways to rehabilitate corroded and severely deteriorated inverts of human entry CMP (i.e., 42-48 in. or larger) is by paving them with reinforced concrete or shotcrete. Refer to Index 5.1.2.2.1.

Where invert paving within the lower 180 degrees is insufficient for large diameter metal pipes that are corroded on the backside throughout the circumference, welded steel pipeliners may be a viable replacement alternative to open trench construction. See Index 5.1.2.2.4.

5.1.2.4.1.1 Cathodically Protecting Metal Culverts

Refer to FHWA Culvert Repair Practices Manual Volume 1, pages 2-12 to 2-14, 6-13 and Volume 2, Appendix B-31, for a discussion on the corrosion process and procedures for cathodically protecting metal culverts.

5.1.2.4.2 Non-Human Entry

In corroded smaller diameter CMP where abrasion is not a factor, designing a pipeliner for corrosion resistance is completely different to designing for abrasion resistance. If the bedload at the site non-abrasive, almost any liner thickness will provide a 50 year service life once the pipe is adequately sealed by the pipeliner and annular space grout forming a composite structure and a corrosion barrier on the inside of the host metal pipe. See Index 6.3.1.1.7 (6).

This concept applies to close fitting (i.e. no annular space grouting) liners which include machine spiral wound PVC (expandable diameter), cured in place pipe or cementitious lining. Each one of these methods provides additional hydraulic capacity (if needed) compared to sliplining. For detailed information on these methods, see HDM Index 853.5, and Indices:

6.1.3.5 Lining with Machine Wound PVC Liner,

6.1.3.2 Lining with Cured-In-Place Pipes, and

6.1.3.6 Sprayed Coatings

SSP 15-6.14 Cementitious Pipeliners includes concrete, shotcrete, mortar, and several proprietary cementitious lining products that are listed on METS's Authorized Materials List for Cementitious Pipeliners and Concrete Invert Paving. In most cases, cement mortar will meet service life requirements - providing abrasion is not a factor.

5.1.2.5 Shape Distortion

The single most important feature to observe and measure when inspecting corrugated metal culverts is the cross-sectional shape of the culvert barrel. The corrugated metal culvert barrel depends on the backfill or embankment to maintain its proper shape and stability. The culvert will deflect, settle or distort when the backfill does not provide the required support. See Index 2.1.1.2, for a general discussion on flexible pipe behavior.

Flexible piping must utilize the soil to construct an envelope of supporting material around the pipe so that the deflection is maintained at an acceptable level. The extent to which the pipe depends on this enveloping soil is a function of the depth of cover, surface loading and the ring stiffness of the pipe. The deflection of flexible pipe is the sum total of two major components: the "installation deflection", which reflects the technique and care by which the pipe was handled and installed, and the "service deflection", which reflects the accommodation of the constructed pipe-soil system (pipe and compacted backfill) to the subsequent earth loading and other loadings. Overloading or soil movement may cause distortion.

It is quite common to have at least some symmetrical or unsymmetrical distortion in corrugated metal culverts. A flexible pipe has been defined as one that will deflect at least 2 percent without structural distress. It is also common that the culvert is stable in that

distorted shape; that is, it is not continuing to distort. Therefore, it is important to determine by measurement and monitoring whether the culvert is stable in its distorted shape or whether it is continuing to become distorted. Usually 85-90% of deflection occurs within the first month of construction. This is the time that it takes for the soil to settle and stabilize. However, if there is instability in the backfill, the pipe will continue to change shape. In general, deflections of more than 7-8% (either horizontal or vertical) should be noted and may lead to structural problems. Beyond 10%, even joints designed to be watertight will be prone to leakage and the associated potential for soil migration/piping. Seam separation and/or buckling may occur for deflections greater than 15%. If deflection is identified, the location, by distance from the inlet and degrees from invert, should be noted and the length of the horizontal and vertical axes of the culvert barrel should also be recorded. Unless water-tightness is an issue, monitoring deflections below 10 - 12% is typically the appropriate course of action so that a determination can be made of whether the conditions are worsening. Beyond 10 - 12%, it is recommended that plans for rehabilitation/replacement be undertaken.

The overall condition of the culvert should be assessed, as well as the soil-pipe conditions that caused the deformation to occur (e.g., corrosion, abrasion, poor compaction, open joints, etc…). Symmetrical deflection of the crown may be indicative of problems with support of the bottom of the culvert or insufficient backfill/cover over the top of the culvert. Unsymmetrical deformation of the top of the culvert may be the result of loss of soil support on one side of the bottom (potentially from problems due to infiltration, infiltration and piping at joint(s) or perforated invert) or improper compaction of the backfill on one side of the culvert. Thus the shape may not be symmetrical for either the entire length of the culvert or individual sections of it. Therefore, the conditions that caused the deformation must be assessed and the rehabilitation plan must include correcting the underlying problem. See Appendix B-34, FHWA Culvert Repair Practices Manual Volume 2, for procedures for repair at a distorted section.

Shape Distortion Caused by Backfill Soil Loss

The decision to repair (re-compact embedment material, grout voids, repair joints or line invert) verses replace the culvert by trenching and cover or by other trenchless methods such as jacking or pipe-ramming, is dependent in part on the structural integrity of the culvert. If the culvert must be replaced, the decision to replace by trench and cover versus other trenchless methods will be influenced by cost, the need to maintain traffic during

construction and possibly other environmental concerns. Relining by sliplining or other methods that are outlined in this D.I.B. should not be used on host culverts with excessive (generally greater than 15-20 %) deflection because the host pipe must be structurally sound and capable of withstanding all loads. See Index 6.1.1 for Caltrans host pipe structural philosophy. However, if the host pipe can be adequately stabilized, stopping further distortion, and the soil-pipe interaction re-established, it may be feasible to rehabilitate pipes with deflections beyond 10-12% using semi rigid pipe such as welded steel or fiber reinforced polymer concrete pipe. See Indices 2.1.1.1.3.1, 5.1.2.2.3.1, 7.1.6.1, and 11.1.1.

5.1.3 Structural Plate Pipe

Since they too are flexible structures that are made from metal, they suffer from the same types of problems, as do corrugated metal and pipe arch culverts. In addition, they also suffer from problems that are unique to their style of construction, which is assembly with individual pieces of metal that are fastened together with bolts. See pictures below.

5.1.3.1 Seam Defects

The longitudinal seams of structural steel plate culverts are subject to displacement and cracking due to incorrect assembly of the plates and differential soil pressures or most commonly, if there is instability in the backfill caused by infiltration.

Repairs are made by splicing, re-bolting (see pictures below) or welding with reinforcing steel to the inside corrugation valleys at the location of seam distress. See Appendix B-38, FHWA Culvert Repair Practices Manual Volume 2.

Longitudinal or transverse seams in structural plate assemblies may deteriorate due to sheared or corroded connector bolts, lost or corroded nuts, or plate tears.

Whatever repair is made must be structurally sufficient to accommodate the load thrust, which will be present in the shell of the conduit. Contact Underground Structures within DES for all structural repair recommendations.

If the seams are to be repaired using shotcrete or gunite, brackets, firmly attached to the structural plates, must be incorporated to anchor the concrete mix to the plates. Because of the inherent low thrust resistance in such repair, this type of seam repair may be useful only for transverse seams.

Again, the conditions that caused the seam defects must be assessed and the rehabilitation plan must include repairing the seams and correcting the underlying problem (e.g. invert paving – see below) and/or stabilizing the soil envelope if necessary.

5.1.3.2 Seam Repair, Invert Durability and Shape Distortion

The same discussions outlined under invert durability and shape distortion for corrugated metal pipe also apply to structural steel plate. There are ordinarily no joints in structural plate culverts, only seams. Distress in circumferential seams is rare and can result from severe differential deflection caused by a foundation or soil failure – usually as a result of invert failure (see photos in Index 5.1.2.2). Depending upon the degree of deflection, it may be possible to rehabilitate the invert, however, contrary to the recommendation under “Joint Defects” on page 6-19 of FHWA Culvert Repair Practices Manual Volume 1, and Appendix B-26 of Volume 2, internal steel expansion ring gasket joint sealing systems are not recommended for circumferential seam repairs. If it is not possible to rehabilitate the invert, and there is severe differential deflection present, replacement is recommended. However, if the host pipe can be adequately stabilized, stopping further distortion, and the soil-pipe interaction re-established, it may be feasible to rehabilitate SSPP with deflections beyond 10-12% using semi rigid pipe such as welded steel (all sizes) or fiber reinforced polymer concrete pipe (available up to 126 in. nominal diameter). See Indices 2.1.1.1.3.1, 5.1.2.2.3.1, 7.1.6.1., and 11.1.1.

SSPP with Deflection Beyond 10-12%

5.1.4 Aluminum Pipe

Aluminum corrodes differently than steel and is not susceptible to corrosion attack within the acceptable pH range of 5.5-8.5. See Indices 2.1.2.2 and 2.1.2.3 when considering abrasion potential. Aluminum reacts with the alkalis (OH) found in portland cement concrete. Because of potential problems with bonding at the connection where there will be a build-up of gas leaving a gap with no bond, concrete invert paving is not recommended. Aluminum culverts are not recommended where abrasive materials are present, and where flow velocities would encourage abrasion to occur (i.e., culvert flow velocities that frequently exceed 5 feet per second where abrasive materials are present) In a corrosive environment, Aluminum may display less abrasive wear than steel depending on the volume, velocity, size, shape, hardness and rock impact energy of the bed load. If it is deemed necessary to place aluminum pipe in abrasion levels 4 through 6 in Table 855.2C, contact Headquarters Office of State Highway Drainage Design for assistance.

5.1.5 Plastic Pipe

Plastic pipe culverts are a relatively new form of culvert in sizes ranging from 12 inches to 60 inches for new pipe and potentially up to 120 inches for use as a liner. It is advised that designers confer with the District Hydraulics Unit and/or the Office of Highway Drainage in Headquarters prior to using plastic pipe larger than 60 inches in diameter. Refer to Indices 2.1.1.2.2, and 2.1.2 for discussion of material and service life factors.

Although plastics are not subject to common corrosive agents (e.g., chlorides, acids, sulfates) and show good resistance in abrasive environments, they are still part of the "flexible" pipe materials family and therefore most of the discussion and repair procedures that are outlined under the joint repair, shape distortion and soil migration for metal pipe will also apply to plastic. See Indices 5.1.2.1, 5.1.2.2.4 and 5.1.2.3. The same

EDPM seals described in Index 5.1.1.1.3.2 for RCP and Section 15-6.05 may be used in plastic pipes. Internal mechanical pipe joint seals should not to be used where the joint gap exceeds 2" (i.e., physical separation of pipe ends) or where the joint gap exceeds 3" for bell/spigot plastic. However, the maximum allowable gap may be increased by 1-1/2" for both indicated situations if a back-up plate used.

The Standard Specifications state plastic pipe must be Type C or Type S corrugated polyethylene pipe, or corrugated PVC pipe with smooth interior. If the site is abrasive, the standard wall thickness for plastic pipe may not meet the minimum material thickness required to achieve 50 years of maintenance-free service life. See HDM Tables 855.2F and 853.1B for plastic pipeliner alternatives if repairs are needed.

Other issues that are unique to plastic include oxidation, stress cracking and problems associated with exposure to ultraviolet rays at the ends and being flammable. Cracks in high-density polyethylene (HDPE) pipes are most typically going to occur at a seam. In reference to HDPE, it is worth noting that since it is a relatively new culvert product, both the material qualities and physical design are undergoing continuous change. Pipe made today has a different profile, different corrugation (annular instead of helical or spiral) and is made with revised resin compounds as the industry upgrades its products. Given that our standards for placement have been relatively constant, we are more likely to see cracking and other problems in older pipes.

Splitting of 60 inch Diameter Pipe. This Pipe was Installed in 1996 by Another State

Profile of pipe: Note wall buckling and obvious oval shape. This 42 inch diameter pipe was installed in 1994. The pipe is 82 feet long and has a maximum cover of about 10 feet. Separations of the joints ranged from 1 to 3 inches. Rippling of the sidewalls is apparent throughout the length of the pipe (see below).

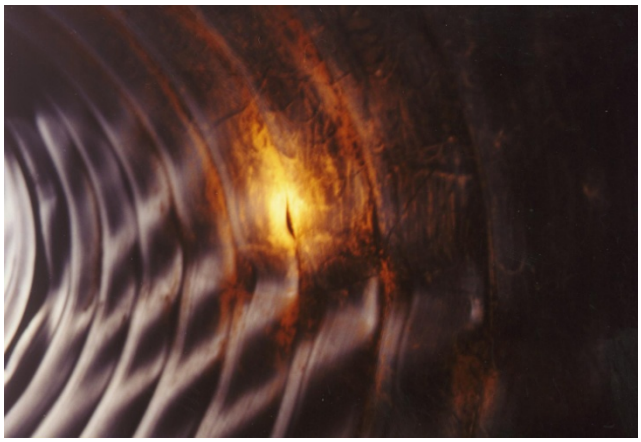

Small Crack and Wall Rippling

Compared to other pipe materials, plastic may have a higher potential for damage from improper handling, and a higher potential for damage from improper backfilling procedures including wall cracks, excessive deflection, bulges, joint separation, excessive joint overlap caused by longitudinal expansion and wall rippling and buckling.

Some of the problems that have been outlined for plastic pipe may be monitored, such as deflection (see Index 5.1.2.2.4). However, pipes with excessive deflection will need to be replaced or lined with a rigid material that is capable of supporting all ground and traffic loads. See Index 11.1.1.

Depending on the problem, excluding excessive deflection, other possible choices for repair not discussed in the previously referenced indices include, lining with cured in place pipe, machine wound PVC or replacement. See Index 6.1 and 9.1. If lining plastic pipe with cured in place pipe, UV curing must be specified in lieu of any heat curing methods which may cause damage to the host pipe. See Index 6.1.3.2.

6.1 GENERAL CULVERT BARREL REHABILITATION TECHNIQUES

6.1.1 Caltrans Host Pipe Structural Philosophy

In general, if the host pipe cannot be made capable of sustaining design loads, it should be replaced rather than rehabilitated. This is a conservative approach and when followed eliminates the need to make detailed evaluations of the liners' ability to effectively accept and support dead and live loads. Prior to making the decision whether or not to rehabilitate the culvert and/or which method to choose, a determination of the structural integrity of the host pipe must be made. See Index 2.1 of this D.I.B. for a discussion on loading, bedding and behavior of flexible and rigid pipe. Existing voids in the base material under the existing culvert should be filled with cement slurry prior to rehabilitating any type of culvert. In human entry pipe, existing voids within the culvert

backfill should be filled with grout to re-establish its load carrying capability after invert lining (see Index 6.1.2 below).

Also, see Index 11.1.1 for a discussion on supporting the roadway and traffic loads.

Other entities have adopted procedures for assigning structural capacity to liners. While this is presently not Caltrans practice, under unique circumstances, or where extraordinary costs for rehabilitation are likely, it is recommended that the designer consult with the Headquarters Office of Highway Drainage Design within the Division of Design to determine if consideration of these alternative analysis methods is justified.

6.1.2 Grouting Voids in Soil Envelope

External grouting is the introduction of a chemical or Portland cement based grout into void space or areas of loose soil directly behind or beneath a culvert. This discussion will focus on grouting, see Indices 3.1.3.1, 5.1.2.3 and 11.1.1 for a more detailed discussion on voids and soil migration. The Geotechnical Engineer should always be contacted when voids not immediately adjacent to the culvert (i.e., beyond 12 inches) are discovered or if there are sinkholes or significant depressions. See Index 7.1.6.3.

6.1.2.1 Voids Below the Invert

For pipes of all sizes, it is quite common for voids to appear below a worn invert. Typically they should be filled with slurry cement backfill as described in Section 15-6.01C(5)(a) of the Standard Specifications.

SSP 15-6.02 includes specifications for filling voids below with cement slurry and around a culvert with contact grout (see Index 6.1.2.1) that have been found during cleaning and inspection and were not described in the bid package. It specifies wherever there are voids in the materials below the invert of the culvert and they are greater than 3 inches deep for non-human entry culverts, or 6 inches deep for culverts 60 inches in diameter or larger, they should be filled with slurry cement backfill. In smaller host pipes being lined, voids less than these indicated thresholds will be filled by the grout used for grouting the annulus between a plastic pipeliner and the host pipe. Filling voids below the invert found during field review or by Maintenance Inspection must be described separately and in lieu of using SSP 15-6.02.

6.1.2.2 Voids Within the Backfill

If voids in the backfill are discovered during the field review they must be backfilled with cement based grout into the void space or areas of loose soil around the culvert. In human entry pipe, grouting may be accomplished from the inside of the culvert through prepared grout holes in the culvert wall. See Section 15-6.01B(2) Contact Grout of the Standard Specifications and SSP 15-6.03 - Contact Grouting and Appendix G, Example 1. When concrete invert paving is included, typically the order of work is:

- Drill grout ports and probe
- Place slurry cement in voids below invert
- Place grout ports, WWM and welded stud connectors
- Pave invert
- Place additional slurry cement (large voids)

- Place grout through ports

Occasionally, external grouting for human entry facilities may also be needed. Extremely large voids on the back side of a culvert or surface voids may first be filled with slurry cement backfill independently of grouting. In non-human entry pipe external grouting is uncommon but if needed, may still be accomplished from grout tubes drilled through the pavement or embankment.

Filling voids above the invert found during field review or by Maintenance Inspection must be specified separately and in lieu of using SSP 15-6.02.

Three alternative procedures for grouting voids behind the culvert are described in FHWA Culvert Repair Practices Manual Volume 2, Appendix B-30, page B-135:

- Gravity flow from above the void
- Gravity flow through a tremie pipe or tube (from bottom up)
- Pressure grouting (see below)

The above-referenced description for Pressure Grouting refers to a low-pressure method for grouting voids directly behind the sides of culvert and is the same as the Caltrans method called “Contact Grouting”. Voids or loose soils not immediately adjacent to the culvert (i.e., beyond about 12 inches) that developed through infiltration of fines into the culvert may indicate more serious problems affecting the roadway prism that will need to be addressed with other grouting methods. See Indices 11.1.1 and 11.1.2, for discussions on supporting roadway and traffic loads and compaction grouting.

For bidding purposes, contract plans should include these details:

General site conditions, access, end treatments, (profiles and grade), staging, voids, special situations, restrictions, etc.

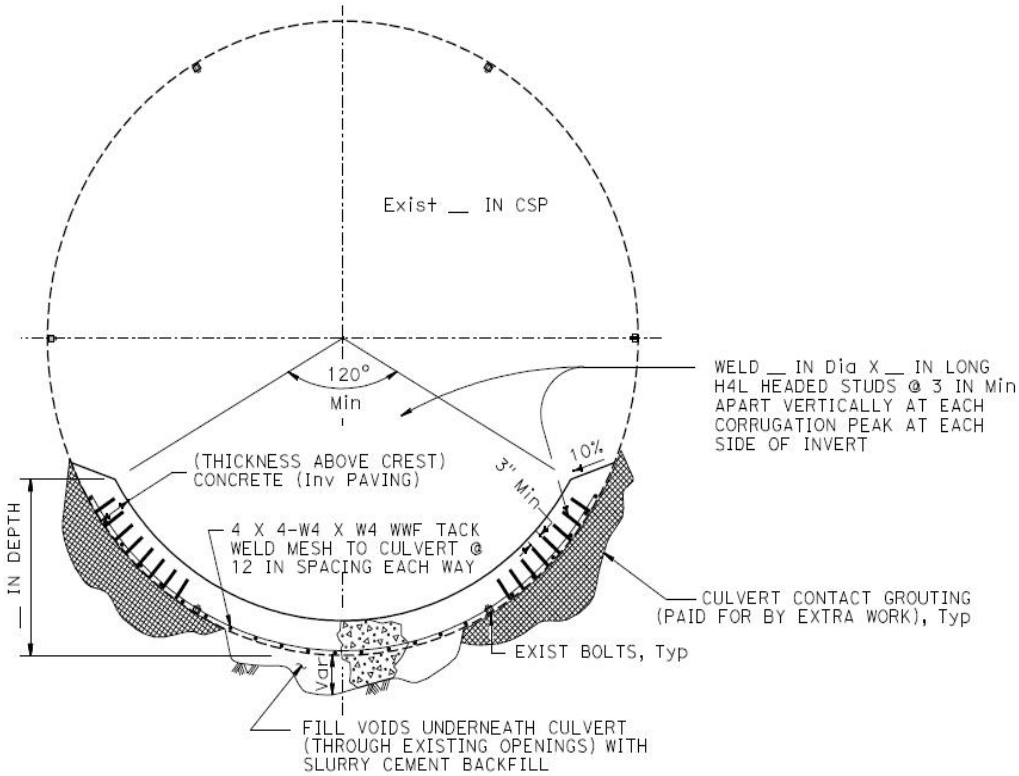

Large diameter (human entry) pipe repairs for voids below the invert and in the backfill. See pipe photo under Index 5.1.2.2.4. for example prior to repairs.

6.1.3 Rehabilitation Families

6.1.3.1 Sliplining (General)

Refer to HDM Topic 853, HDM Index 855.2 and FHWA Culvert Repair Practices Manual Volume 1, pages 6-23 through 6-29.

Note: Caltrans host pipe structural philosophy in Index 6.1.1 and HDM Index 853.2 is intended to supersede any discussion by FHWA for restoring structural strength with slipliners. A major deficiency in sliplining may be an ultimate lack of soil-structure interaction. For flexible pipe, this is a crucial physical characteristic, which directly relates to the structural integrity of the pipe. Therefore, thorough grouting of the (annular) space between the culverts should typically be specified for construction.

Rehabilitation of culverts with slipliners is one of several methods available for extending the life of an existing culvert. Sliplining is a common method and most viable for smaller diameter non-human entry pipes 36 inches or less in diameter that are too small for invert paving. Considering the resulting reduction in capacity, sliplining is not suitable for all situations. Prior to any proposal to rehabilitate a culvert with a pipe liner a thorough examination of the existing culvert and consultation with the District Hydraulics Unit to discuss possible alternatives and cost effective solutions must be performed.

Sliplining consists of sliding a plastic pipeliner or a new culvert inside an existing distressed culvert and then grouting the annulus as an alternative to total replacement. This method is much faster to complete than a remove and replace option and often will

yield a significant extension of service life at less cost than complete replacement, particularly where there are deep fills or where trenching would cause extensive traffic disruptions.

When choosing the material for a slipliner, consideration should be given to the environment and the physical needs of the installation including handling and weight of the liner and construction footprint. For culverts operating under outlet control, a smoother liner material may offset the reduction in culvert diameter. The adequacy of outfall protection should be evaluated when the culvert liner results in higher discharge velocities.

Selection of the appropriate liner material should take into account the reasons and mode of failure of the existing pipe. High-density polyethylene and polyvinyl chloride pipes in both solid wall and ribbed profiles have become common materials for sliplining culverts. One product - polyethylene (PE) large diameter profile wall sewer and drain pipe as specified in ASTM F 894) is available in diameters up to 120 inches. However, for any plastic liner or slipliner, if the diameter exceeds 60 inches, it is recommended the designer confer with headquarters for alternative more cost effective repair methods. See Index 7.1.6.1. See Index 6.1.3.1.1 for sliplining using plastic pipeliners and Appendix H for a design example.

Corrugated metal pipes are sometimes used for larger diameter sliplining projects. See Index 7.1.7 for maximum push distance for large diameter flexible pipe liners and Appendix H, which includes a large diameter CMP sliplining example. Liner pipes with smooth exteriors usually will allow for easier insertion, particularly if the culvert being rehabilitated has a corrugated profile. For structural repairs/replacement, viable alternatives may include welded steel pipeliners (see Index 5.1.2.2.4) and fiber reinforced polymer mortar (RPMP), or fiber reinforced polymer concrete (FRPC), which is about a third of the weight per foot of precast RCP. FRPC can be manufactured in "short sections" (2-3 foot lengths) for use in curves that can accommodate a 1-1.5 degree deflection angle at each joint. Alternatively, if needed, beveled sections can be customized. Either way, at curves the short sections are placed by bobcat or pulled through the curves and then installed with a winch. See FHWA Culvert Repair Practices Manual Volume 1, page 2-27 and Index 2.1.1.1.3.1.

Inserting a RPMP Slipliner

Prior to sliplining, the existing culvert must be surveyed carefully to determine the maximum diameter of culvert that can be inserted through the entire length of the host pipe. Any deflections in the culvert walls will become control points and any alignment changes coupled with deflections can reduce the slipliner diameter significantly. Major deflections may indicate the need for other rehabilitation techniques. It may be necessary to install rails on which to slide the liner culvert.

Once stream diversion methods are in place and the work area is stabilized, the liner pipe is moved into the culvert either one section at a time or as an entire unit. All water and debris must be removed from the existing pipe prior to grouting. The liner is pushed with jacks or machinery such as a backhoe. When the liner is in place, the space between the culverts generally must be grouted to prevent seepage and soil migration and to establish a connection between the liner, the host pipe and the soil thus providing uniform support and eliminating point loads. Grout may be either gravity fed into the annular space between the liner and the existing culvert or pumped through a hose or small diameter pipe (1-1/2”- 2 inch PVC) laid in the annular space. When the lining is fairly long (100 feet or more), gravity feeding of grout will be difficult unless additional openings in the top of the existing culvert are made for intermediate insertion of the grout. When grout is pumped, the small pipe or hose is typically removed as the space is gradually filled. When this is difficult due to field conditions, the small pipe or hose may be banded to the liner with "tees" placed a 5 ft intervals.

To avoid floating of the liner and ensure a uniform grout thickness around the liner pipe, the grout should be placed in lifts. Each lift of grout should be allowed to set before continuing further up the culvert walls. Alternatively, the liner can be plugged at the ends and filled with water to prevent floating during the grouting operation, or blocks can be used (at least two sets per pipe section) to effectively rest between the liner and the existing culvert.

PVC Lined Storm Drain with Grout Tube at Upper Right and Drain Tube at Bottom

The grouting process will apply pressure to the liner pipe. Minimum liner pipe stiffness must be selected by the contractor such that the pipe strength exceeds the maximum specified grouting pressure. See Index 6.1.3.1.1.4 for grouting plastic slipliners.

In accordance with Section 15-6.01A(3)(e) of the Standard Specifications, the contractor will be required to perform a test on each type of grout and grout system proposed and shall submit a grouting plan to the Engineer.

Each project will have its own unique site-specific conditions that will require a unique grouting plan for that site. The pipe length and slope are directly related to grouting pressure and the plan must outline the proposed grouting method and procedures to stay below the maximum grouting pressure. Most grouting work will be sub-contacted and the quality of grouting contractors can vary considerably. For quality assurance purposes see Section 15-6.01A(3)(e) of the Standard Specifications for a list of submittals and calculations required by the grouting sub-contractor.

The Contractor may obtain approval from the Engineer for any changes to be made in grout mix, grouting procedure, or installation prior to commencement of grouting operations. Grout for annular space grouting is described in Section 15-6.01B(3) of the Standard Specifications.

For further general information on the procedures for sliplining culverts, refer to FHWA Culvert Repair Practices Manual Volume 2, Appendix B-39, page B-174.

6.1.3.1.1 Sliplining Using Plastic Pipe Liners

The following information is intended to provide design guidance regarding the rehabilitation of existing pipe culverts with plastic pipe liners. Indices 6.1.3.1.1.1 through 6.1.3.1.1.7 below, supersede DIB No. 76 dated January 1, 1995.

6.1.3.1.1.1 Allowable Types of Plastic Liners

Plastic pipe made of polyvinyl chloride (PVC) and high-density polyethylene (HDPE) is commercially available in a variety of diameters and styles that are adequate for the purpose of relining existing culverts. Any plastic culvert that is discussed in Section 64 of the Caltrans Standard Specifications will perform adequately as a corrosion barrier. In addition, many types of solid wall, profile wall PVC and HDPE are manufactured that are also capable of performing the necessary function depending whether abrasion, corrosion or both are the underlying cause of the problem. No attempt is made to list every type of plastic pipe that could be used. The following information describes some of the most likely alternatives that comply with SSP 15-6.10 and are listed in HDM Table 853.1B.

The most economical types currently manufactured are PVC solid wall (ASTM D3034, ATTM F 679, AWWA C900, AWWA C905 or ASTM D 2241, PVC closed-profile wall pipe (ASTM F1803), corrugated PVC (smooth interior - ASTM F 794 & F 949), Type S (smooth interior) corrugated HDPE (AASHTO M-294), HDPE solid wall (AASHTO M 326 and ASTM Designation F 714) and Polyethylene large-diameter-profile wall sewer and drain pipe (ASTM F894). HDPE solid wall fusion welded or Snap-Tite™ (ASTM F-714) is relatively expensive but has a variety of diameters and wall thicknesses. HDPE solid wall pipe is listed by Standard Dimension Ratio (SDR) classification (Standard Dimension Ratio given by the ratio of outside diameter to wall thickness with the lower SDR's having thicker walls). Also available is PVC profile wall sewer pipe (ASTM F-794 and F-949). Also relatively expensive, this smooth interior and smooth exterior pipe (closed profile) with an internal rib can be easier to install than other types and does not require couplers, belling, or other connectors that would increase the pipe diameter at the joints. Several pipe products are made specifically for sliplining with joint systems designed to maintain a constant outside and inside diameter. Some examples of these are

the Contech A2 Liner Pipe™ (PVC), the Vylon PVC Slipliner Pipe™, and the Weholite™ Culvert Reline System (HDPE).

6.1.3.1.1.2 Strength Requirements

Pipe used as a liner will not typically be subjected to the degree of loading experienced by the original culvert (see Caltrans host pipe structural philosophy). In most cases, although the invert of the original culvert has deteriorated, the load carrying capacity has not been significantly diminished. As a result, strength requirements of liner pipe are more dependent on a determination of potential grouting pressures and the need for the liner pipe to withstand handling and installation stresses.

Pipe stiffness is a common term used in describing plastic pipe's resistance to deflection prior to placing any backfill. The higher the number, the stiffer the pipe, and the better the pipe's resistance to grouting pressure and handling.

The following table lists minimum pipe stiffness in PSI. Testing for pipe stiffness is performed in accordance with ASTM D-2412:

Nominal Dia. (in)	PVC* SDR-35	PVC* Profile	HDPE Type S	HDPE Solid Wall (SDR)				
				15.5	17	21	26	32.5
15	46	46	42	N/A	N/A	N/A	N/A	N/A
16	46	N/A	N/A	86	71	22	11	6
18	46	46	40	86	71	22	11	6
20	N/A	N/A	N/A	86	71	22	11	6
21	46	46	N/A	86	71	22	11	6
21.2	N/A	N/A	N/A	86	71	22	11	6
24	46	46	34	86	71	22	11	6
27	46	46	31	86	71	22	11	6
30	N/A	46	28	86	71	22	11	6
33	N/A	N/A	25	N/A	N/A	N/A	N/A	N/A
34	N/A	N/A	N/A	N/A	71	22	11	6
36	N/A	46	22	N/A	71	22	11	6
39	N/A	N/A	N/A	N/A	N/A	N/A	N/A	N/A
42	N/A	46	20	N/A	N/A	N/A	11	6
45	N/A	N/A	N/A	N/A	N/A	N/A	N/A	N/A
48	N/A	46	18	N/A	N/A	N/A	11	6
54	N/A	46	N/A	-	-	-	-	-
55	N/A	N/A	N/A	-	-	-	-	-
60	N/A	46	14	-	-	-	-	-
63	N/A	N/A	N/A	-	-	-	-	-

* No Caltrans Standards

For stiffness of Polyethylene (PE) large diameter (10 to 120 in. ID) profile wall sewer and drain pipe as specified in ASTM F 894, see tables under Index 6.1.3.1.1.3 below.

6.1.3.1.1.3 Pipe Dimensions

When determining the appropriateness of relining an existing culvert, an assessment of the discharge capacity of the liner must be made to verify that the liner pipe, due to its smaller diameter than the existing culvert, will allow the design discharge to be passed. To make this assessment, selection of the liner must consider the effect on the liner diameter due to liner wall thickness and, in particular, the space requirements of the liner joints. This maximum exterior dimension of the liner must be able to be inserted through the existing culvert, while also considering deformations in the existing culvert, minor culvert bends, and any other disturbances in the bore of the existing pipe. These considerations make it imperative that the designer obtains accurate field measurements of the existing culvert to determine the minimum available clearance prior to selecting liner types and diameters. A good rule of thumb for sizing the liner is to select a liner diameter that is 20% less than the diameter of the host pipe. Be aware that manufacturers

occasionally delete existing products and often bring new products to the market. Contact with industry representatives is encouraged to verify the availability of any products that will be specified.

The following tables provide industry-supplied pipe inside and outside diameters. Dimensions will vary somewhat between different manufacturers and must be verified prior to being specified. Also see FHWA Culvert Repair Practices Manual Volume 2, pages A-40 to A-47.

PVC SDR 35 PIPE DIMENSIONS (AASHTO M 278* and ASTM F 679)

Nominal Dia. (in)	Min. Average Inside Dia. (in)	Average Outside Dia. (w/o bell)** (in)
15*	14.42	15.30
18	17.63	18.70
21	20.78	22.05
24	23.38	24.80
27	26.35	27.95
30	29.69	31.50
33	33.40	35.43
36	37.11	39.37
42	41.95	44.50
48	47.89	50.80

* AASTO M278 applies to nominal sizes of 15” or smaller

** Tolerance on Average Outside Diameter varies from ± 0.028 in to ± 0.075 in

PVC DR PIPE DIMENSIONS (AWWA C905)

Minimum Wall Thickness (in)

Nominal Dia.	Avg. OD	DR 18	DR 21	DR 25	DR 32.5	DR 41
14	15.3	0.85	0.73	0.61	-	-
16	17.4	0.97	0.83	0.70	-	-
18	19.5	1.08	0.93	0.78	-	-
20	21.6	1.20	1.03	0.86	-	-
24	25.8	1.43	1.23	1.03	-	-
30	32.0	-	-	1.28	0.99	0.78
36	38.3	-	-	1.53	1.18	0.93

HDPE TYPE S PIPE DIMENSIONS (AASHTO M 294)

Nominal Dia. (in)	Average Inside Dia.* (in)	Average Outside Dia. (in)
15	14.98	17.57
18	18.07	21.20
24	24.08	27.80
30	30.00	35.10
36	36.00	41.70
42	41.40	47.70
48	47.60	53.60
60	59.50	66.30

* Tolerance on inside diameter is + 4.5 (but not more than 1.5 inches) and –1.5 percent

HDPE SDR PIPE DIMENSIONS (ASTM F 714)

Minimum Wall Thickness (in)

Nominal Dia.	Average OD	SDR 32.5	SDR 26	SDR 21	SDR 17	SDR 15.5	SDR 13.5	SDR 11
16	16	0.492	0.615	0.762	0.941	1.032	1.185	1.455
18	18	0.554	0.692	0.857	1.059	1.161	1.333	1.636
20	20	0.615	0.769	0.952	1.176	1.290	1.481	1.818
22	22	0.677	0.846	1.048	1.294	1.416	1.630	2.000
24	24	0.738	0.923	1.143	1.412	1.548	1.778	2.182
26	26	0.800	1.000	1.238	1.529	1.677	1.926	2.364
28	28	0.862	1.077	1.333	1.647	1.806	2.074	2.545
30	30	0.923	1.154	1.429	1.765	1.938	2.222	2.727
32M	31.594	0.969	1.213	1.500	1.854	2.031	-	-
32	32	0.985	1.23	1.524	1.882	2.065	2.370	2.909
34	34	1.046	1.308	1.619	2.000	2.194	2.519	3.091
36	36	1.108	1.385	1.714	2.117	2.323	2.667	3.273
40M	39.469	1.213	1.516	1.874	2.315	2.710	3.111	-
42	42	1.292	1.615	2.000	2.471	3.097	-	-
48M	47.382	1.456	1.819	2.248	2.780	-	-	-
48	48	1.477	1.846	2.286	2.824	-	-	-
54	54	1.662	2.077	2.571	3.176	-	-	-
55M	55.295	1.697	2.118	2.626	3.244	-	-	-
63M	63.209	1.937	2.421	3.000	-	-	-	-

PVC CLOSED PROFILE WALL PIPE DIMENSIONS

(ASTM F 1803 and ASTM F 794 (Series 46))

Nominal Dia. (in)	Min. Inside Dia.* (in)	Outside Dia. ** (in)
18	17.60	N/A
21	20.69	22.68
24	23.43	25.43
27	26.42	28.43
30	29.41	31.43
32	32.41	33.43
36	35.40	37.93
39	38.39	N/A
42	41.38	44.38
45	44.37	N/A
48	47.36	50.78
54	55.35	57.13

* Tolerance on Minimum Inside Diameter varies from + 0.11 in to + 0.32 in per ASTM F 1803

** Vylon Slipliner outside diameter example shown, dimensions may vary from manufacture example shown

PVC CORRUGATED - SMOOTH INTERIOR PROFILE WALL PIPE DIMENSIONS (ASTM F 949 and ASTM F 794 (Series 46))

Nominal Dia. (in)	Average. Inside Dia.* (in)	Outside Dia. ** (in)
12	11.72	12.80
15	14.34	15.66
18	17.55	19.15
21	20.71	22.63
24	23.47	25.58
27	26.44	28.86
30	29.47	32.15
36	35.48	38.74
42 ***	41.97	-
45 ***	44.37	-
48 ***	47.36	-

* Tolerance on Average Inside Diameter varies from to ± 0.028 in to ± 0.105 in

** For slipliners without bell, tolerance on Average Outside Diameter varies from to ±0.018 in to ±0.079 in from dimensions shown per ASTM F 949

*** Minimum inside tolerance varies from + 0.255 in. to + 0.285 in per ASTM F 794. Minimum outside diameter controlled by bell not shown.

The following tables list the average inside diameter, the minimum wall thickness of the waterway, the minimum wall thickness in the bell and ring stiffness constant (RSC) for Polyethylene (PE) large diameter (10 to 120 in. ID) profile wall sewer and drain pipe as specified in ASTM F 894:

OPEN PROFILE PIPE DIMENSIONS AND TOLERANCES

Nominal Pipe Size in (mm)	Avg. Inside Dia. in (mm)	Tolerance on Avg. Inside Dia. in (mm)	Min. Wall Thickness in Pipe Waterway, *W*				Min. Bell Thickness, *Tb* in (mm)
			RSC 40 in (mm)	RSC 63 in (mm)	RSC 100 in (mm)	RSC 160 & higher in (mm)	
14 (460)	18.00 (457.2)	±0.38 (9.65)	0.18 (4.57)	0.18 (4.57)	0.18 (4.57)	0.22 (5.59)	0.70 (17.78)
21 (530)	21.00 (533.4)	±0.38 (9.65)	0.18 (4.57)	0.18 (4.57)	0.18 (4.57)	0.24 (6.10)	0.70 (17.78)
24 (610)	24.00 (609.6)	±0.38 (9.65)	0.18 (4.57)	0.18 (4.57)	0.22 (5.59)	0.24 (6.10)	0.70 (17.78)
27 (690)	27.00 (685.8)	±0.38 (9.65)	0.18 (4.57)	0.18 (4.57)	0.24 (6.10)	0.24 (6.10)	0.70 (17.78)
30 (760)	30.00 (762.0)	±0.38 (9.65)	0.18 (4.57)	0.22 (5.59)	0.24 (6.10)	0.26 (6.60)	0.70 (17.78)
33 (840)	33.00 (838.2)	±0.38 (9.65)	0.18 (4.57)	0.24 (6.10)	0.24 (6.10)	0.30 (7.62)	0.95 (24.13)
36 (910)	36.00 (914.4)	±0.38 (9.65)	0.18 (4.57)	0.24 (6.10)	0.26 (6.60)	0.30 (7.62)	1.05 (26.67)
42 (1070)	42.00 (1066.8)	±0.42 (10.67)	0.24 (6.10)	0.24 (6.10)	0.30 (7.62)	0.38 (9.65)	1.15 (26.21)
48 (1220)	48.00 (1219.2)	±0.48 (12.19)	0.24 (6.10)	0.26 (6.60)	0.30 (7.62)	0.38 (9.65)	1.25 (31.75)
54 (1370)	54.00 (1371.6)	±0.54 (13.75)	0.24 (6.10)	0.30 (7.62)	0.38 (9.65)	0.42 (10.67)	1.25 (31.75)
60 (1520)	60.00 (1524.0)	±0.60 (15.24)	0.26 (6.60)	0.30 (7.62)	0.38 (9.65)	0.52 (13.21)	1.30 (33.02)
66 (1680)	66.00 (1676.4)	±0.66 (16.76)	0.30 (7.62)	0.38 (9.65)	0.42 (10.67)	0.67 (17.02)	1.30 (33.02)
72 (1830)	72.00 (1828.8)	±0.72 (18.29)	0.30 (7.62)	0.38 (9.65)	0.42 (10.67)	0.90 (22.68)	1.30 (33.02)
78 (1830)	78.00 (1981.2)	±0.78 (19.81)	0.30 (7.62)	0.38 (9.65)	0.52 (13.21)	0.90 (22.68)	1.35 (34.29)
84 (2130)	84.00 (2133.6)	±0.84 (21.34)	0.38 (9.65)	0.42 (10.67)	0.67 (17.02)	0.90 (22.68)	1.35 (34.29)
90 (2290)	90.00 (2286.0)	±0.90 (22.86)	0.38 (9.65)	0.42 (10.67)	0.90 (22.68)	0.95 (24.13)	1.35 (34.29)
96 (2440)	96.00 (2438.4)	±0.96 (24.38)	0.38 (9.65)	0.52 (13.21)	0.90 (22.68)	0.95 (24.13)	1.35 (34.29)
108 (2740)	108.00 (2743.2)	±1.08 (27.43)	0.42 (10.67)	0.67 (17.02)	0.90 (22.68)	0.95 (24.13)	1.35 (34.29)
120 (3050)	120.00 (3048.0)	±1.20 (30.48)	0.52 (13.21)	0.67 (17.02)	0.90 (22.68)	0.95 (24.13)	1.35 (34.29)

CLOSED PROFILE PIPE DIMENSIONS AND TOLERANCES

Nominal Pipe Size in (mm)	Avg. Inside Dia. in (mm)	Tolerance on Avg. Inside Dia. in (mm)	Min. Wall Thickness in Pipe Waterway, *W*, All RSC in (mm)	Min. Bell Thickness, *Tb* in (mm)
10 (250)	10.0 (254.0)	±0.38 (9.65)	0.18 (4.57)	0.5 (12.7)
12 (300)	12.0 (304.8)	±0.38 (9.65)	0.18 (4.57)	0.5 (12.7)
15 (380)	15.0 (381.0)	±0.38 (9.65)	0.18 (4.57)	0.5 (12.7)
18 (460)	18.0 (457.2)	±0.38 (9.65)	0.18 (4.57)	0.5 (12.7)
21 (530)	21.00 (533.4)	±0.38 (9.65)	0.18 (4.57)	0.5 (12.7)
24 (610)	24.00 (609.6)	±0.38 (9.65)	0.18 (4.57)	0.5 (12.7)
27 (690)	27.00 (685.8)	±0.38 (9.65)	0.18 (4.57)	0.5 (12.7)
30 (760)	30.00 (762.0)	±0.38 (9.65)	0.18 (4.57)	0.5 (12.7)
33 (840)	33.00 (838.2)	±0.38 (9.65)	0.18 (4.57)	0.5 (12.7)
36 (910)	36.00 (914.4)	±0.38 (9.65)	0.18 (4.57)	0.5 (12.7)
40(1020)	40.00 (1016.0)	±0.38 (9.65)	0.18 (4.57)	0.5 (12.7)
42 (1070)	42.00 (1066.8)	±0.42 (10.67)	0.18 (4.57)	0.5 (12.7)
48 (1220)	48.00 (1219.2)	±0.48 (12.19)	0.18 (4.57)	0.5 (12.7)
54 (1370)	54.00 (1371.6)	±0.54 (13.75)	0.18 (4.57)	0.5 (12.7)
60 (1520)	60.00 (1524.0)	±0.60 (15.24)	0.18 (4.57)	0.6 (15.2)
66 (1680)	66.00 (1676.4)	±0.66 (16.76)	0.18 (4.57)	0.6 (15.2)
72 (1830)	72.00 (1828.8)	±0.72 (18.29)	0.18 (4.57)	0.6 (15.2)
78 (1830)	78.00 (1981.2)	±0.78 (19.81)	0.18 (4.57)	0.6 (15.2)
84 (2130)	84.00 (2133.6)	±0.84 (21.34)	0.18 (4.57)	0.7 (17.8)
90 (2290)	90.00 (2286.0)	±0.90 (22.86)	0.18 (4.57)	0.7 (17.8)
96 (2440)	96.00 (2438.4)	±0.96 (24.38)	0.18 (4.57)	0.7 (17.8)
108 (2740)	108.00 (2743.2)	±1.08 (27.43)	0.18 (4.57)	0.7 (17.8)
120 (3050)	120.00 (3048.0)	±1.20 (30.48)	0.18 (4.57)	0.8 (20.3)

MINIMUM RING STIFFNESS CONSTANT (RSC) VALUES

Nominal Pipe Classification	RSC (lb/ft of Length)
40	36
63	56
100	90
160	144
250	225
400	360

6.1.3.1.1.4 Grouting

See Index 6.1.3.1 for general grouting considerations, contractor submittals, grouting plan, and quality control. Specifications are provided in Sections 15-6.01A(3)(e), 15-6.01A(4)(f), 15-6.01B(3) and 15-6.01C(5)(b) of the Standard Specifications.

Unless site constraints make it infeasible, full length grouting of the liner is always recommended. This not only provides a more secure attachment to the existing culvert, but also reduces the potential for joint leakage to create piping problems. Although generally not a concern, it also provides additional strength if there is deterioration of the existing culvert, particularly where fill heights exceed currently recommended values for plastic culverts.

The grout should be a low-density foam concrete consisting of Portland cement, fly ash and additives conforming to Section 15-6.01B(3) of the Standard Specifications. This type of mix should allow the grout to flow easily and completely fill the entire annular space around the liner pipe (see below).

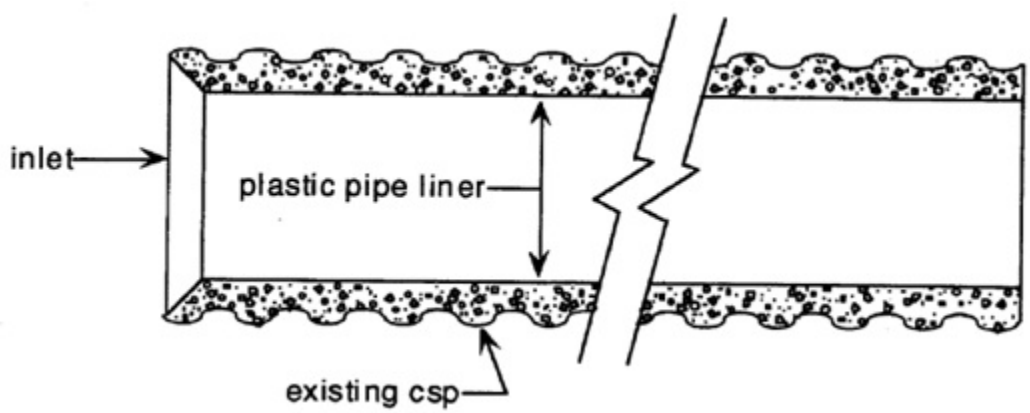

Grouting of Annular Space Between Inserted Pipe and Culvert.

Grouting pressure resistance of the liner varies with pipe stiffness. The gauged pumping pressure shall not exceed the liner pipe manufacturer's approved recommendations or the values shown below:

HDPE Solid-Wall	
SDR	**Maximum Safe Annular Grouting Pressure (psi)**
32.5	4
26	8
21	16
19	21
15.5	36

Maximum safe annular grouting pressure (psi) for other materials:

- Divide minimum pipe stiffness shown in Index 6.1.3.1.1.2 by 4.5

- Centrifugally cast glass fiber reinforced polymer mortar (RPMP): 6 psi or pipe stiffness divided by 3
- Divide minimum pipe stiffness by 4.5 for CMP and Fiber Reinforced Plastic

Verification must be made that the joint type specified is also able to withstand anticipated grouting pressures.

It should be understood that the above criteria differs from Section 15-6.01C(5)(b) of the Standard Specifications which provides both a factor of safety and allowance for various types of pipe material response to application of pressure: "For pipeliners with a stiffness less than 29 psi, the grout pump's pressure measured at the point of injection must not exceed either of the following:

1) 5 psi
2) Manufacturer's instruction

For pipeliners with a stiffness of at least 29 psi, the grout pump's pressure measured at the point of injection must not exceed 7.25 psi."

After grouting Section 15-6.01A(4)(h) of the Standard Specifications specifies allowable deflection thresholds of the pipeliner.

6.1.3.1.1.5 Joints

In general, joints in pipes used for slipliners will not be subjected to the same performance requirements, as are joints in direct burial applications. The encasement provided by both the host pipe and the annular space grouting will typically isolate slipliner pipe joints from problems associated with infiltration/exfiltration, separation or misalignment. What is important is an understanding of the physical dimensions of various pipe joints (see tables in Index 6.1.3.1.1.3) to ensure that there is adequate space to both insert the liner pipe and feed in the annular space grout (at least 1 inch of space on all sides is desirable), and to ensure that the joint is sufficiently tight to preclude migration of grout through the joint during the annular space grouting operation (which may have operating pressures of several psi). At a minimum, joints or couplers must comply with the manufacturer's instructions and be compatible with the installation method for the corresponding plastic pipeliner as well as complying with the specifications for standard shear strength in Section 61-1.01D(1)(b) of the Standard Specifications.

Where it is anticipated that grouting pressures are likely to exceed 4 psi, joints meeting watertight requirements should also be specified in SSP 15-6.10.

Several manufacturers have developed modified joints for their pipes specifically for sliplining applications. This generally is accomplished by routing out male and female ends of the pipes and eliminating the bell end. As such, the increased external dimension of the bell is eliminated, minimizing the loss of host pipe cross sectional area. Several of these specially modified pipes are available in both PVC and HDPE. Some examples are given in Index 6.1.3.1.1.1. To date, however, one of the most commonly used plastic slipliners is solid wall HDPE. The sections of this pipe are most typically "joined" via a fusion-welding machine, which results in a continuous pipe structure with no change in

inside or outside dimension at the locations where pipe segments are fused. Butt fusion procedures for solid wall HDPE are described in Appendix A and in SSP 15-6.10.

Also to be considered in specifying the type of pipe, and its attendant type of joint, is the likely method of insertion of the liner into the host pipe being rehabilitated. Most plastic joints used in sliplining applications have little to no ability to resist tensile forces. As such, they must be pushed, or jacked through the pipe being rehabilitated. Only fusion welded joints and some of the types with routed ends with overlapping tabs will allow a combination of pushing and pulling the liner through the host pipe. The need to also be able to pull as well as push can be important where very long (or heavy) segments are being inserted, or where deflections, discontinuities or angle points in the host pipe increase the force needed to bring the liner into place.

6.1.3.1.1.6 Installation

Prior to insertion of the liner pipe, the existing culvert must be cleaned of all debris either by flushing or manual removal. Any rust or spalls must be cleaned and removed as well as protrusions into the pipe.

A jacking pit must be constructed with adequate size to contain lengths of pipe to be inserted, grouting equipment and any other equipment necessary to perform the insertion. The liner is normally pushed into the existing culvert, but occasionally it is pulled, or a combination of pulling and pushing is used. Due to the often-large pressure load needed to push the last sections of a long or heavy liner into place, pulling may be the preferred method as long as adequate provisions have been made to avoid joint separation.

Inserting PVC and HDPE Slipliners

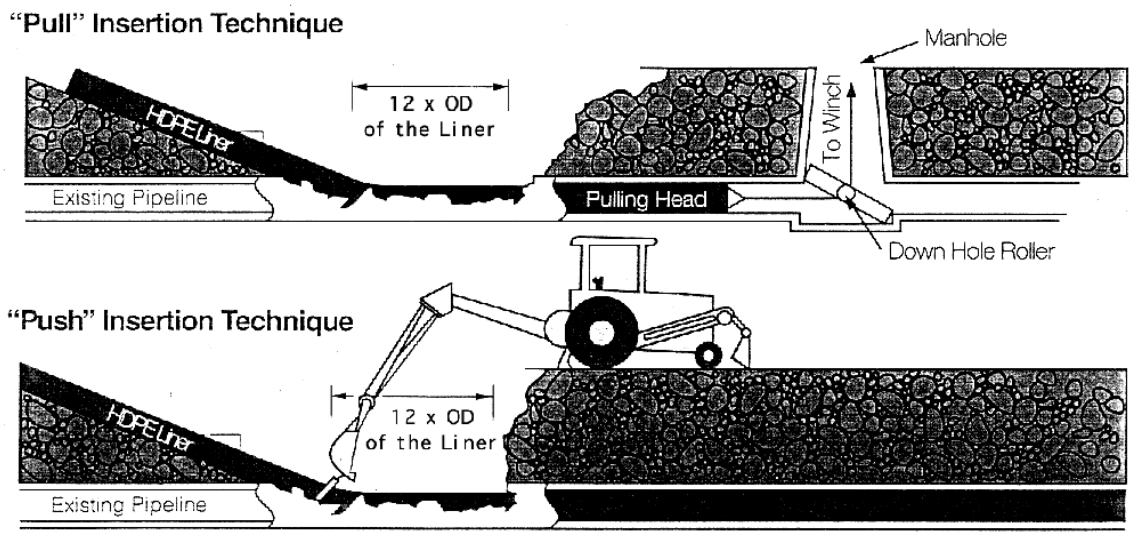

Inserting HDPE Slipliner into a Storm Drain

The difficulty encountered in inserting the liner will be primarily dependent upon the roughness of the existing culvert (either corrugations, other protrusions, or minor displacements) and the type of exterior on the liner. Corrugated or ribbed liners will be the most difficult to insert, particularly if the existing culvert is also corrugated, corroded, and/or distorted.

6.1.3.1.1.7 Other Considerations

1) For any plastic slipliner, if the liner diameter exceeds 60 inches, confer with headquarters for alternative methods. See Index 7.1.6.1. For human entry host pipes, consider invert paving instead of sliplining.
2) PVC pipe as typically manufactured will become brittle and experience a significant reduction in impact resistance due to freezing temperatures and/or long-term exposure to ultra-violet radiation. Therefore, ends of completed installations should not be exposed if they would be subject to very low temperatures or direct sunlight. Temperature considerations are only important if the pipe is likely to be handled or impacted (falling rocks/debris or maintenance equipment) during periods of low temperatures.
3) Design discharge for the liner must be evaluated with consideration of conditions that may have changed since the original culvert was placed. It is incorrect to assume that if a liner will pass the discharge for which the existing culvert was designed that all design requirements have been met.
4) The nominal pipe diameters given in the tables in Index 6.1.3.1.1.3 reflect nominal U.S. customary unit designations for current round pipe sizes. It is imperative that designers use the most current information available from manufacturers when specifying products in order to know the exact dimensions of pipe products that will be delivered to the job site.
5) See HDM Tables 853.1B and 855.2F for required thickness of plastic pipeliners in abrasive conditions to achieve 50 years service life. The alternatives listed in HDM Table 853.1B are included in SSP 15-6.10 for plastic pipeliners. The same

basic approach for invert paving design will apply to all liners and linings, that is, selecting an appropriate material thickness based on abrasion level of the site, determining the wear rate of the host pipe, and by following the procedures that are outlined under HDM Index 855.2. Caltrans web-based tool AltPipe (see link below) will estimate the loss due to abrasion for PVC and HDPE, but care must be taken defining the correct abrasion level. In addition to Q_{2-5} velocities being greater than 8 fps, there must be a 'significant' volume of bedload to use any of the three 'abrasive levels' 4-6. If the volumes are fairly minor as is the case in smaller pipes draining small watersheds, abrasion level 3 may be used. The best indicator is to estimate the wear rate of the existing pipe and/or other pipes placed nearby with similar abrasion factors. See Appendix H for Design Example and http://www.dot.ca.gov/hq/oppd/altpipe.htm

For corrosion resistance only, including grouting, any of the plastic pipes and liners listed under SSP 15-6.10 is suitable to form a corrosion barrier suitable to meet a 50 year design service life for abrasion levels 1 through 3 in HDM Table 855.2A.

6.1.3.2 Lining with Cured-In-Place Pipes

Cured-in-place-pipe (CIPP) is a method of complete culvert relining employing a thermosetting or UV cured, resin-impregnated flexible felt or fiberglass tube either;

a) Inverted in place using water or compressed air, or
b) Pulled in place with a winch.

The lining does not come in standard sizes, but is designed specifically for the individual pipeline to be rehabilitated, with variable diameters/shapes (i.e., round, elliptical, oval, etc.) and wall thickness. When necessary, a minimum thickness of the liner can be specified to provide additional service life for abrasive conditions. See HDM Table 855.2F and SSP 15-6.11.No grouting is required, and there is no annular space between the host pipe and liner. Historically, the most common application of this method has been in small diameter (less than 48 inches) storm drains and sanitary sewers when construction access precludes the use of a plastic slipliner and/or more hydraulic capacity is needed.

Pulled-In-Place Steam Cured CIPP Installation on ED-50 in the Sierra Nevada Mountains

Concrete culverts subject to sulfate attack are especially good candidates for this repair method or metal pipes where the reduction in diameter using other lining methods is not acceptable.

For the pulled in place installation method, a winched cable is placed inside the existing pipe. The resin-impregnated liner is connected to the free end of the cable and then pulled into place between drainage structures or culvert ends. The cable is disconnected, the ends are plugged and the liner is inflated and cured with hot water, mixed air and steam or by use of ultraviolet light. For resin control, the specifications (SSP 15-6.11) require an impermeable layer on both the inside and outside of the tube which may be achieved by a pre-manufactured inner and outer film, or a single outer film and an inflatable pipe lining bladder called a calibration hose or inversion bladder. The bladder's function is to provide pressure against the inner wall of the outer membrane during curing and to provide a pathway for the curing agent which can be hot water, steam or U V.

For the inversion process, manufacturers may use a number of different systems to insert the tube. This method generally consists of inserting a polyester felt tube, saturated with a liquid thermosetting resin material, into the culvert. The tube is inserted inside out (inverted) and filled with water or compressed air. During inversion the lining tube turns inside out and travels down the pipeline resulting in the plastic outer sleeve surface becoming the inner surface of the repaired pipe with the resin system being in contact with the pipeline. Pressure inside the inverted tube, due to the water or compressed air, presses the resin-impregnated tube against the carrier pipe wall. Once the tube has reached the far end of the pipe section under repair, either heated water or steam is fed into the inverted tube to cure the thermosetting resin. For all inversion installations, the specifications require a preliner for resin control and to isolate the resin-impregnated felt from the host pipe. The preliner tube is composed of a 3-ply laminate sheet combining two layers of polyethylene film and high-strength-nylon cord grid formed into a tube.

Inserting Polyester Felt Tube, Saturated with a Liquid Thermosetting Resin Material, into Manhole

If water is used for curing, it must be heated continually and circulated during the curing process. The application of heat hardens the resin after a few hours, forming a jointless pipe-within-a-pipe. Once set, remote controlled cutters are used to reinstate junctions and laterals. Any stream flow must be diverted during construction. Additionally a water source to fill the tube must be accessible to the site when water is used for inversion and curing.

The maximum length of pipe run that can be rehabilitated in this manner will vary with diameter, but over 400 feet is not uncommon. Due to potential environmental concerns including the capture and disposal of hot process water, using this lining method with heated water for curing should generally be limited to urban drainage systems that discharge to treatment plants, otherwise all residual water will need to be captured for proper disposal.

When curing using steam the concerns are similar to water cure except for a slightly increased cure time and much less water to transport and dispose of.

Steam Curing and Finished Product Inside Metal Host Pipe

When curing using of ultraviolet light a fiberglass tube is used and no refrigeration is necessary. Cure times are quicker than the other methods; however, there is a thickness limitation of one inch since the maximum thickness for light curing limited to 0.5 inches per run.

Site set up is a high proportion of costs on small projects. The site footprint is relatively large compared with some lining methods, but it is also somewhat flexible. In general, trained personnel with specialized equipment are required. When lining metal culverts with bituminous coatings containing high sulfur grades, if the specifications are not followed for inversion installations, and a pre-liner is not placed, there may be a problem with the resins used for CIPP.

For additional information on CIPP, see Appendix F and SSP 15-6.11.

6.1.3.3 Lining with Folded and Re-Formed PVC Liner (Fold and Form)

This method (per ASTM F 1504) involves the insertion of a continuously extruded, folded PVC pipe into the existing pipeline or conduit and the reformation of the pipe to conform to the shape of the existing pipeline or conduit without excavation. In order to

allow the deforming and reforming process to take place without damaging the liner, it is manufactured from PVC compounds that are modified from those used in standard ribbed PVC pipe or other PVC pipes used for direct burial. At present, there is no definitive information available on the long-term durability or abrasion resistant properties of PVC compounds of this type. As of this writing, the availability of this product is limited to pipes 24 inches in diameter or smaller.

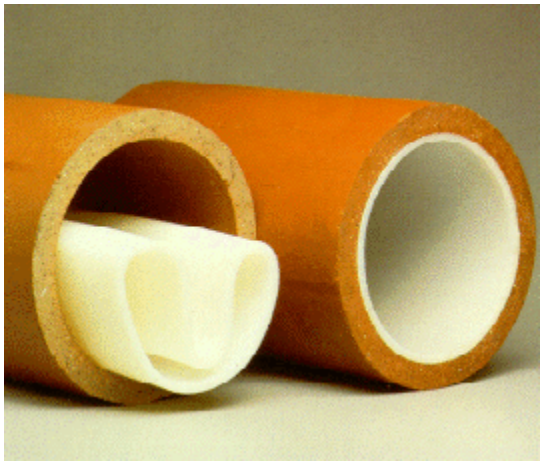

Fold and Form PVC Liner

6.1.3.4 Lining with Deformed-Reformed HDPE Liner

As of this writing, because the availability of this product in the U.S.A. is extremely limited, the Caltrans specification has been withdrawn.

This repair method uses HDPE solid wall pipe with Standard Dimension Ratios (SDR – pipe diameter/wall thickness ratio) adequately flexible to be folded for insertion into existing pipes. Lengths of individual pipe runs that can be rehabilitated by this method vary depending on pipe diameter – larger diameters require sections that need to be butt-fused together on site.

Larger diameters (greater than 18 inches) are brought to the jobsite in individual sections and then butt-fused and deformed on site by means of thermo-mechanical deforming equipment into a “U” shape (see pictures below).

On-Site Mechanical Deforming Equipment Required for Large Diameter HDPE Liner

This technique is generally applicable to rehabilitating pipes of 18 inches diameter or less. Caltrans has tested this method with pipe sizes up to 30 inches.

After the liner is pulled through the pipe to be rehabilitated, heat is introduced into the folded liner using pressurized steam to force it out to shape. A remote controlled cutter reconnects connections and laterals without excavation.

The advantages of this method compared to sliplining include, no joints, no grouting and insignificant annular space thus providing increased hydraulic capacity if the reduction in diameter was a concern.

Smaller Diameter Liner (18 in.) Being Installed through a Drainage Inlet from a Spool

The main limitations of this method are that the range of available pipe diameters is limited and this method cannot accommodate oval or odd shapes of the old pipe, diameter variations, possible joint settlement and pipe bends for liners over 18 inches in diameter. Smaller diameter liner (18 inches) is delivered to the job site on a spool and has a significantly improved bending radius than the larger diameters that may require digging a jacking pit (see picture below).

Steam Being Introduced into 30 Inch HDPE Liner

6.1.3.5 Lining with Machine Wound Plastic Liner

Standard Specifications Section 15-6.13 describes machine spiral wound PVC pipeliners along with two individual SSP's for fixed and expandable diameter (15-6.13B and 15-6.13C). This method is primarily used to address corrosion and infiltration/exfiltration. Per HDM Table 855.2A it is not recommended for use in abrasive environments.

This method involves the insertion of a machine made field fabricated spiral wound PVC liner pipe into an existing pipe (either flexible or rigid). After insertion, the spiral wound PVC liner pipe is either:

a) Inserted at a fixed diameter and then expanded until it presses against the interior surface of the existing pipe; or,
b) Inserted at a fixed diameter or dimensions (if non-circular) into the existing pipe and is not expanded, and the annular space between the spiral wound PVC liner pipe is grouted; or,
c) Wound against the host pipe walls by a machine that travels down the pipe.

The primary advantages of using this method include:

1) Smaller construction footprint than sliplining (see pictures below)
2) No annular space grout for small diameters (30 inches or less), and
3) Can be used in multiple shapes (i.e., box, arch etc)

As with any plastic liner or slipliner, if the liner diameter of any of the above systems exceeds 60 inches, headquarters concurrence is recommended. See Index 7.1.6.1.

The expanding system is used in smaller diameter host pipes 42 inches or smaller and consists of a continuous plastic strip that is spirally wound into the existing deteriorated host pipe. The male and female edges of the strip are securely locked together via the winding machine. Once a section is installed, it is expanded against the wall of the host pipe, creating a watertight seal. Both flexible and rigid pipes can be rehabilitated with this system. This lining system is similar to the fixed diameter process except that the continuous spiral joint utilizes a water activated polyurethane adhesive for sealing, no annular space grouting is required (but the pipe ends are usually grouted) and the range of diameters given above is for smaller non-human entry pipes.

Expanda Pipe™ Expandable Diameter Lining System Example Shown Above

The fixed diameter machine spiral wound liner process produces a renovated pipe, arch, or box with a maximum dimension/diameter of 120 inches consisting of a layered composite of PVC Liner, cementitous grout, and the original pipe. The combination of the ribbed profile on the PVC liner and the grout produces an integrated structure with the PVC liner "tied" to the original pipe through the grout similar to a slipliner. Unlike

the expanding system, after insertion, the annular space between the liner and the existing pipe is filled with grout as described in Indices 6.1.3.1 and 6.1.3.1.1.4. The composite structure also may provide a watertight system.

Ribsteel™ Lining System Shown Above

There are variations to PVC profiles that are used by the different manufacturers for the fixed diameter machine spiral wound liner process. Some manufacturers use a lining system that is capable of being steel reinforced for much larger diameters (up to 120 in.) than the expanding system however, as with any plastic liner or slipliner, if the liner diameter exceeds 60 inches, headquarters concurrence is recommended. See Index 7.1.6.1. For many smaller applications the steel reinforcing is not required as the plastic strip has sufficient stiffness to withstand the grouting pressure. The steel reinforced PVC lining system consists of a continuous plastic strip, which is spirally wound directly into the existing deteriorated host pipe at fixed diameter. The male and female edges of the strip are securely locked together via the winding machine. The plastic strip is designed with ribs on its outer surface to engage a continuous strip of profiled reinforcing steel, which is added to the outside of the plastic pipe during installation. The resulting liner has a smooth plastic internal surface with increased stiffness from the steel reinforcing profile. The liner is annular space grouted as described in Indices 6.1.3.1 and 6.1.3.1.1.4. A watertight seal is achieved through sealing elements pre-applied to the male and female edges of the profile during manufacture.

There is also a steel reinforced, HDPE fixed diameter machine spiral wound lining system available with pre-manufactured, fully encapsulated continuous profiled steel strips capable of lining larger diameters from 36 inches through 120 inches. As of this writing, there are no Caltrans specifications available for the HDPE alternative.

Both flexible and rigid pipes can be rehabilitated with this system primarily to form a corrosion barrier suitable to meet a 50 year design service life for abrasion levels 1 through 3 in HDM Table 855.2A due to the limited profile thickness available.

Full Bore, Traveling Machine System: Rotaloc™ Lining System Shown Above

6.1.3.6 Sprayed Coatings

Sprayed lining systems can be used to repair drainage structures or to form a continuous lining within an existing pipe. Lining materials may include concrete, concrete sealers, silicone, vinyl ester, and polyurethane. The primary goals of the non-cementitious systems are improved watertightness and corrosion resistance for concrete structures. See below.

The application of any coating or lining requires correct surface preparation and cleaning in advance of application.

6.1.3.6.1 Air Placed Concrete and Epoxy or Polyurethane Lining for Drainage Structures

Placing a spray-applied Polyurethane protective lining on air-placed concrete is an effective method to rehabilitate concrete inlets and manholes; after the concrete has

cured, a thin layer of moisture tolerant epoxy primer is applied by spray, followed by a thicker outer layer of polyurethane lining material.

Epoxies can also be used alone or as a topcoat to a cementitious product to provide a chemical barrier.

6.1.3.6.2 Cement Mortar Lining

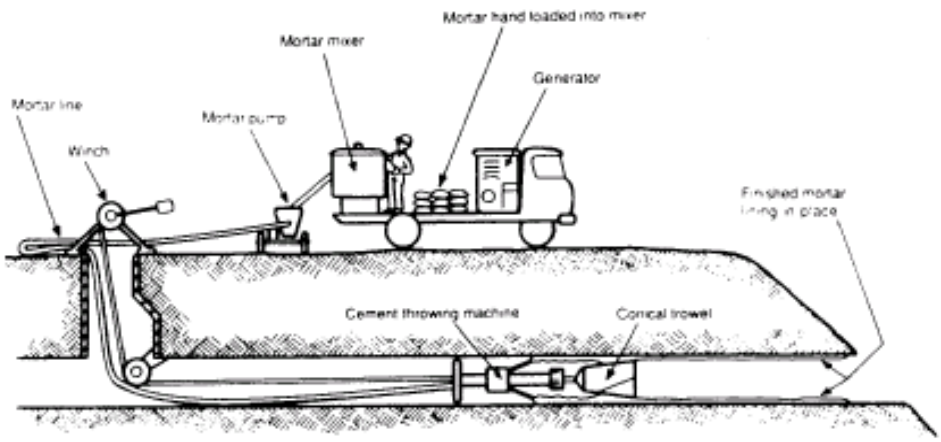

CEMENT MORTAR LINING

This alternative may be used to line small diameter corroded and/or abraded corrugated steel pipes ranging from 12 inches to 36 inches in diameter. Prior to performing this technique, any voids below the pipe must first be pressure grouted as described Index 6.1.2.1. In addition to being an effective invert lining method, this method will also create a zone of alkalinity for the entire circumference of the pipe. Corrosion Engineers maintain that the cement in concrete prevents or significantly retards the oxidation of the interior base metal (rust). Construction thicknesses from 1/8" to 3/4" per pass are attainable. Typically, two passes are made resulting in a 1 inch minimum thickness over the crests of the corrugation pattern. If moderate abrasion is present (abrasion level 4), a 2 inch minimum thickness of calcium aluminate mortar is needed. See Authorized Materials List for Cementitious Pipeliners below. For higher abrasion levels, other methods such as CIPP should be considered. See HDM Table 855.2F, SSP 15-6.14 and http://www.dot.ca.gov/hq/esc/approved_products_list/

Any grade (steepness) of pipe can be lined by this method and most bends do not present a problem. For non-abrasive applications, the mortar is made of one part cement, to one part sand and must comply with section 51-1.02F of the Standard Specifications, except the ratio of cement to sand when measured by volume must be 1 to 1. As with other liners, the pipes must first be thoroughly cleaned and dried. The cement mortar is applied by robot. The mortar is pumped to a head, which rotates at high speed using centrifugal force to place the mortar on the walls. A conical-shaped trowel attached to the end of the machine is used to smooth the walls. See picture below.

The maximum recommended length of small-diameter pipe that can be lined using this method is approximately 650 feet.

6.1.3.7 Man-Entry Lining with Pipe Segments

For the rehabilitation of corroded large (42 inches and larger) diameter culvert or storm drain systems, fiberglass reinforced segmental liners can be manufactured in virtually any shape and length from a number of different types of materials, discussed below. The installation process is very labor intensive, largely due to the joining and grouting. These liners can be installed in single, short, circumferential sheets joined together longitudinally, or in multiple segments (usually invert and crown sections joined together longitudinally and circumferentially). The joints may be tongue and groove. Additional joint protection can be provided by the application of resin-based sealants following the installation of the units. This work generally needs to be accomplished in dry conditions;

therefore, bypassing of flow may be required. Segmental liners can be installed with or without annular space grouting which is usually incorporated with mortar placement (shotcrete) or by pressure grouting applied after installation.

6.1.3.7.1 Fiberglass Reinforced Cement (FRC) Liners

Fiberglass reinforced cement (FRC) liners are prefabricated thin panels designed for large diameter (42 inches and larger) and odd shaped pipes. After the existing pipeline is thoroughly cleaned and dewatered the segments are provided in 4 to 8 foot lengths, which overlap at each end. The segment ends may be pre-drilled to accommodate screws or impact nails. The segmented rings are anchored on spacers and, upon final assembly; the section(s) are cement pressure grouted in the annulus provided. Laterals are cut in and grouted.

This method provides flexibility to be made specially to fit any portion (e.g., invert only), shape or size of host pipe and to accommodate variations in grade, slopes, cross-sections and deterioration. The linings are not designed to support earth loads, therefore, the host pipe must be structurally sound. Although the segmented sections are lightweight and easy to handle, the installation is labor intensive and slow.

The FRC liners are normally three eighth inches thick, but can vary. They are composed of Portland cement, fine sand and chopped, fiberglass rovings. They have high mechanical and impact strengths and also a high strength to weight ratio. FRC is more abrasion resistant than the concrete mix used in standard reinforced concrete pipe (RCP). See Index 2.1.1.1.3.3.

6.1.3.7.2 Fiberglass Reinforced Plastic (FRP) Liners

Irregular Shape Examples Using FRP

Invert Lining with FRP

Fiberglass reinforced plastic (FRP) liners are similar in most respects to FRC liners, however, they are lighter weight and more resistant to chemical attack (e.g. sulfate) and therefore provide a better corrosion barrier (when used to line steel pipes) than FRC liners. They are also abrasion resistant with negligible absorption and permeability.

The FRP liners are normally one half inch thick, but can vary. They are composed of thermosetting plastic resin (polyester or vinylester) and chopped, fiberglass rovings and mostly constructed with the same materials that are used to make fiber-reinforced polymer concrete. See Index 2.1.1.1.3.1. However, however, a sand free inner surface made of pure resin is provided for resistance to chemical attack and abrasion resistance. The fiberglass inner surface has a finish that is compatible with the type of resin employed. The outer surface is treated with bonded inert sand aggregate to enhance the adhesion to the annular space grout.

Channeline Sewer Systems (North America) Inc. offers a range of FRP segments up to 15 feet in diameter available in any shape or size.

Existing Multi-Plate Arch Before Lining

After Lining with FRP

6.1.3.8 Other Techniques

The following references summarize several important repair techniques described under Index 5.1 . They are also included in the table of alternative repair techniques in Index 8.1.1:

- 5.1.1.1.3.1 Internal chemical grouting
- 5.1.1.1.3.2 Internal joint sealing systems and repair sleeves
- 5.1.1.2 & 5.1.1.2.1 Crack repairs
- 5.1.2.2.1 & 5.1.2.2.2 Invert paving
- 5.1.2.2.3 & 5.1.2.2.3.1 Steel armor plating and welded steel pipeliners

6.1.3.9 IHS Server Link

A link is available on the DES home page to search for and download various ASTM and AASHTO specifications. The DES home page link is:

http://onramp.dot.ca.gov/hq/des/spi/

7.1 INFLUENCING FACTORS

7.1.1 Hydrology

Urbanization is the most dominant factor in modifying the calculated runoff of a watershed. Other factors include logging and cultivation, hydraulic roughness (natural and man-made channels), and updated rainfall data. All of these factors should be reviewed for changes and accounted for when replacing or rehabilitating a culvert. Refer to Topics 803 and 812 through 815 in the HDM and FHWA Culvert Repair Practices Manual Volume 1, pages 2-1 and 2-2 for factors affecting runoff, and for Departmental procedures for upgrading existing drainage facilities.

7.1.2 Hydraulics

Debris, if allowed to accumulate either within a culvert or at its entrance, can adversely affect the hydraulic performance of the facility. Refer to Index 813.8, and Topic 822 in the HDM for a discussion on Debris Control and Bulking. Vegetation, if allowed to accumulate at the downstream end of a culvert will raise the tail water. If the culvert is operating under inlet control, it may be better not to remove the vegetation since it will not significantly affect the capacity and may serve to create a lower outlet velocity. Under inlet control, the cross sectional area of the culvert, inlet geometry and elevation of the headwater at the entrance are of primary importance. However, even though the roughness of the culvert barrel has minimal impact to the headwater elevation, increasing the roughness will serve to reduce velocity. On the other hand, if the culvert is operating under outlet control, the vegetation may need to be removed since it resists flow to the point of affecting the culvert capacity. Other factors affecting tail water include backwater in the vicinity of a confluence downstream, and tidal influences. At these locations, aggradation or deposited sediments may lessen channel and culvert capacity and increase headwater depth and flood heights. Outlet control involves the additional consideration of tail water elevation, and the slope, roughness and length of the culvert barrel. These two types of control are important hydraulic concepts to be considered

when choosing the type of lining method or impacting entrance and/or exit conditions. Refer to Index 825.2 in the HDM and FHWA Culvert Repair Practices Manual Volume 1, pages 2-3 to 2-6 for a discussion on Culvert Flow. Outlet velocity is another factor to be considered when relining or changing the roughness of the culvert barrel. Refer to Topic 827 in the HDM for a discussion on Outlet Design.

7.1.3 Safety

Refer to Index 110.12 in the HDM for a discussion on safety for jacking and tunneling and tunnel classifications in relation to potential flammable gas or vapor. Refer to Topic 309.1 in the HDM for a discussion on horizontal clearances (e.g. existing headwall and end wall location on rural 2-lane highways). Other safety considerations will be dependent on the scope of the rehabilitation and ADT of the highway. For example, using a trenchless technology method to replace a culvert may result in a reduced number of construction related traffic accidents. Workers are less exposed to traffic and there is usually less disruption to traffic. In addition, there are fewer (but more specialized) workers needed for most trenchless technology jobs that should enhance overall project safety. Consideration should always be made for safety to the traveling public when considering the ability of a deteriorated pipe to support roadway and traffic loads. See example below and Index 11.1.1.

Sawcut CMP Invert Triggering Failure During Invert Repair

7.1.4 Environmental

Repair, rehabilitation, or retrofit projects must be developed that will balance biological, engineering, and hydraulic considerations. Examples of this may include but not limited to;

a) Water quality considerations for compaction grouting where groundwater may be present.
b) Omission of certain pipe lining methods (such as water heated cured in place) in biologically sensitive areas.
c) Chemical grouting in lieu of cementitious grouting either in large diameter pipes to fill voids or to stop infiltration at deteriorated, leaking or open joints in small

diameter (24 inches or less) pipes. The most commonly used gel grouts for this are of the acrylamide, acrylic, acrylate and urethane base types. Acrylamide base gel is significantly more toxic than the others. Grout toxicities are of concern only during handling and placement or installation, however, EPA has now withdrawn a long-standing proposal that sought to ban the use of acrylamide grouts.

The modification of an existing culvert to facilitate the movement of fish to spawn can introduce several problems in the operation of an installation. Culverts are generally designed to operate under inlet control, which can be detrimental to fish passage. See the picture below for an example where the outlet scour hole created a jump too high for fish passage.

If a culvert is modified to operate under outlet control, or modifications are made to the barrel, there may be a decrease in efficiency, and related increase in water depth and sedimentation. Refer to FHWA Culvert Repair Practices Manual Volume 1, pages 3-58 to 3-61, 5-39 to 5-50 and Volume 2, Appendix B-23, for a discussion on fish passage and fish passage devices. Developed in conformance with both state (California Department of Fish and Game) and Federal (NOAA Fisheries Service, Southwest Region) criteria, "Fish Passage Design for Road Crossings" provides worksheets, flow charts, design examples and other design aids to assist the designer in achieving permit achievable projects;

http://www.dot.ca.gov/hq/oppd/fishPassage/index.htm

7.1.5 Host Pipe Dimensions and Irregularities

When using “tight fitting” rehabilitation methods (i.e., no annular space between the host pipe and the liner, e.g., cured in place or expandable machine wound PVC) in small diameter host pipes, it is essential to inspect the existing pipe by physically entering the pipe or with a remote controlled camera. See Index 3.1.1. It may also be necessary prior to construction to verify dimensions and remove protrusions with the use of a proofing pig. A pig is a bullet shaped device made of hard rubber or similar material that is pulled

through the host pipe. This technique has low mobilization costs and low to moderate overall costs.

7.1.6 Coordination with Headquarters and Division of Engineering Services (DES)

7.1.6.1 Headquarters Concurrence for Large Diameter Liners

Although plastic pipe and other types of liner sizes in excess of 60 inches are available (not in all styles), any re-lining project that proposes to utilize such large diameters should be treated as a special design and consultation with the Headquarters Office of Highway Drainage Design within the Division of Design and the Underground Structures unit in the Division of Structures within the Division of Engineering Services (DES) is advised. For any plastic liner or slipliner, if the diameter exceeds 60 inches, the designer is advised to confer with the District Hydraulics Unit and/or the Office of Highway Drainage in Headquarters to discuss alternatives.

7.1.6.2 Geotechnical Design Assistance/Approval for Pipe Replacement using Trenchless Excavation Construction (TEC) Methods

No proposal for the placement of a trenchless culvert installation should be made without obtaining a recommendation from Geotechnical Design within the Division of Engineering Services (DES) that supports the feasibility of the concept and provides input on the type(s) of TEC method that can be considered. Recommendations must be based on comprehensive geotechnical investigations that are summarized in the Geotechnical Design Report.

7.1.6.3 Coordination with Geotechnical Design

Upon discovery of a problem by Maintenance or as part of a programmatic upgrade/rehabilitation to existing facilities, an initial inspection will be conducted by Maintenance or Design in order to identify the basic problem. For smaller diameter pipes, as outlined under Index 3.1.1, it may be necessary to perform an inspection with a remote controlled video camera. An inspection report will be generated which should include any previous history of the site, if available, from Maintenance.

After the initial inspection and problem identification has been performed, a more detailed investigation will be necessary if any of the following factors are present or suspected:

- Soil infiltration
- Obvious piping
- Sinkholes or significant depressions
- Voids or loose soils not immediately adjacent to the culvert (i.e., beyond 12 inches)

If none of the above factors are present or suspected, the Designer should coordinate with District Hydraulics for repair or replacement options to the culvert.

If a more detailed investigation is necessary, the Regional Geotechnical Engineer should be contacted to determine the extent of any voids or loose soils that may exist in the

backfill material adjacent to the culvert (either via Cone Penetrometer Testing (CPT), Ground Penetrating Radar (GPR) or probing with a steel rod from inside the culvert) and to provide a recommendation if needed.

For open sinkholes, voids over the top of the pipe, or voids beyond 12 inches from the culvert, full detailed guidance and specifications should be requested from the Geotechnical Engineer.

Refer to the process flow chart on the next page for a summary of coordination with Geotechnical Design:

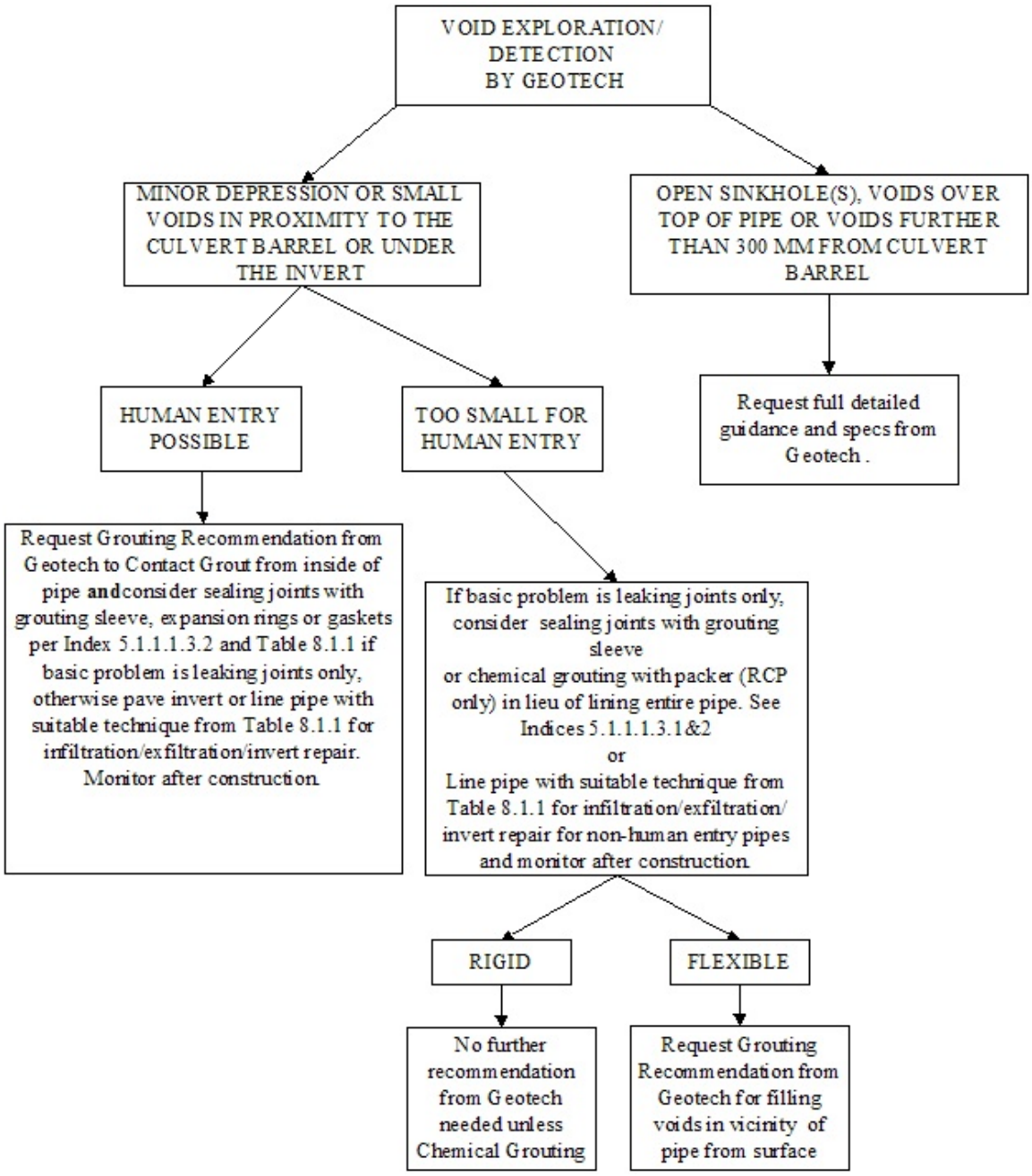

In cases where it is not possible to coordinate Geotechnical Investigations as outlined above, SSP 15-6.02 includes specifications for filling voids below and around a culvert that have been found during cleaning and inspection.

7.1.7 Maximum Push Distance for Large Diameter Flexible Pipe Liners

Any proposal to insert a liner by pushing must also consider the issue of stresses on the face of the pipe being pushed. Pipes typically used as liners are not typically used for jacking and as such are not designed to have large compressive force applied to the end of the pipe. The maximum push distance is a function of weight, strength of the material, coefficient of friction between the liner and the host pipe and area of the pushing face. Most relatively short lengths (200-300 ft) of smooth wall liner in smaller diameters will rarely pose a problem. It is recommended that the designer consult with a manufacturers representative to obtain input on maximum push distance for various liner pipe diameters.

Metal Pipe

For example, using a coefficient of sliding friction equal to 1, (which is conservative) to line an existing 96 inch diameter CMP with a 14 Gage spiral ribbed pipe, the maximum push distance is approximately 270 feet, whereas for 12 Gage, it is approximately 400 feet. Skids are typically used to reduce the sliding friction during insertion when CMP is used as a liner for another CMP. For metal pipe, re-rolled ends with an external band, usually works best along with a bolt bar and strap connectors with the pieces of the "extra" bolt cut off after first being tightened to avoid catching the host pipe during insertion.

Another option is to use no-rolled ends with alignment tabs. If no-rolled ends are used, it is recommended to use alignment tabs on the exterior and a flat band with flat gasket on the interior for grouting (this should be removed after the line is grouted). This option has the advantage of not having to jack the full length of pipe all at one time; instead each piece (say a 20 ft length), or the maximum that can be can be inserted from one end and slid into place (there may not be access from both ends). In addition, using shorter individual pieces allows the flexibility of using a lighter gage. Once the pipes are in place the internal bands are removed after grouting the annular space.

Plastic Pipe

Similar concerns would be raised with plastic pipe liners, depending upon type, size, etc., and can be an issue requiring either pushing the liner in from both ends of very long host pipes and then using an internal coupling to hold the pipe ends together until the annular space grout has cured, or using a combination of both pulling and pushing on the liner. If it is anticipated that pulling will be used, the designer must only specify liner pipes that have tensile strength at the joint sufficient to withstand the force of the pull. Where tension resistance is needed, plastic pipe will be limited to types with solvent or thermally fused joints. Generally the installation method using a backhoe shown in Index 6.1.3.1.1.6. is applicable for smaller diameter plastic pipe and does not apply to larger diameter plastic liners.

8.1 GUIDELINES FOR COMPARISON OF ALTERNATIVE REHABILITATION TECHNIQUES

8.1.1 Table of Alternative Repair Techniques

Following problem identification, the Engineer must determine which of the multiple potential options for rehabilitation should be selected. There is no specific methodology for making this determination, and in many cases several repair options will be viable. In all cases, the key element is to first understand the conditions leading to the failure/deterioration of the existing pipe. Unless there have been significant changes in the upstream watershed, these conditions will likely persist and the selected repair strategy must be able to effectively counteract these conditions.

When designing and installing any of the various techniques, it is recommended that contact be made with suppliers, fabricators, or specialists to clearly ascertain the probability of success. Individual techniques, different fabricators, different chemical formulations, varying geotechnical conditions, condition of the host conduit, and installation techniques and procedures all are influential in the ultimate outcome of the repair technique.

Ultimately, only experience in varying situations and conditions will tell accurately what methods have the best potential for meeting the design objectives. Caltrans continues to evaluate new repair methods with the ultimate objective of augmenting the existing installation specifications listed in Section 15-6 of the Standard Specifications. Refer to Index 10.1 for a discussion on Caltrans New Product Approval process and Construction-Evaluated Experimental Feature Program.

The following table was developed as a general guide for a comparison of alternative repair techniques.

Technique & Materials	Const. Cost	Size Range	Problem Resolution and Advantages	Limitations
Sliplining with continuous or discreet pipe lengths HDPE, PVC, CSP, RCP, RPMP PRC, FRC, WSP	Med.	18”–120”	**Invert Repair for non-human entry pipes, Corrosion, Abrasion, Infiltation/Exfiltration.** Quick insertion; simple method requiring minimal investment in installation equipment and relatively little technical skill. Multiple materials. Provides a virtually new culvert comparable to replacement. Continuous HDPE pipe has very few joints and is capable of accommodating large radius bends. Large range of diameters can be repaired depending on material used. Specialty liners are available in short lengths and constant O.D. (no bell or coupler).	Need fairly large area for liner insertion/jacking pit. Reduces cross section area because the annular space between the old and the new pipe must be grouted which may reduce hydraulic capacity May increase velocity of flow. The environmental concern with this technique is the control of the low-density grout. Labor intensive jointing for fusion welded HDPE. Difficult to reconnect laterals.
Fold and Form PVC	Med. to High	≤ 24”	**Invert Repair for non-human entry pipes, Corrosion, Abrasion, Infiltration/Exfiltration.** Smaller construction footprint than sliplining Easy to transport and handle. Viable technique for storm drains and culverts in non-abrasive urban settings. No annular space grouting required. Capacity maximized.	PVC may become brittle in freezing temperatures. Specialized equipment and trained personnel needed. Cannot accommodate diameter variations and joint settlement. Only circular shapes possible.

Technique & Materials	Const. Cost	Size Range	Problem Resolution and Advantages	Limitations
Cured in Place Pipe (CIPP) Thermosetting Resin-Impregnated Flexible Fabric Tube	High	12“–96”	**Invert Repair for non-human entry pipes, Corrosion, Abrasion, Infiltration/Exfiltration.** No annular space grouting required. Very smooth interior surface may improve hydraulic- capacity. Capacity maximized. Designer may increase thickness for abrasion. Non-circular shapes can be accommodated. No jacking pit required. Eliminates pipe joints/seams and bridges all joints and irregularities on the interior surface of the host pipe. Easy to transport and handle. Good technique for storm drains; can access through MH or DI and can accommodate variations in cross section, minor pipe deformations and bends of up to 90 degrees.	Specialized equipment and trained personnel needed. Site setup high proportion of cost on smaller projects. Resource Agency concerns for disposal of process water: Process water must be recaptured and trucked off site to a prearranged disposal site or held to allow for styrene volitization. Lateral connections are easily handled but may require sealing after they have been cut.
External Grouting voids (Index 6.1.2)	Low	All sizes	**Voids Behind Culvert** Prevents further distortion or collapse of culvert by re-establishing soil-pipe interaction.	Void detection methods are limited Difficult to judge completeness of repair.
Crack Sealing (RCP) Mortar/Epoxy	Low	> 36”	**Cracks in RCP** Low resource commitment. Protects reinforcing.	May be only a cosmetic repair if basic cause of the cracking is not determined and treated. Requires human entry.

Technique & Materials	Const. Cost	Size Range	Problem Resolution and Advantages	Limitations
Invert Lining: with PCC, Calcium Aluminate Concrete/ Mortar or Geopolymer Mortar CRSP	Med. to High High	> 42” ≥ 72”	**Invert Repair for Concrete and Metal Pipe** Abrasion resistant concrete and/or hard aggregate/or steel plate provides abrasion resistance. Can easily modify thickness to meet needs. Limited to bottom third of pipe Simple method requiring minimal investment in installation equipment and relatively little technical skill. If invert perforation is present, same equipment can be used for invert paving.	Human entry only. Cement is subject to break down if runoff is acidic and concrete mix design is not modified. May be difficult to attach wire mesh reinforcement or provide mechanical tie to host pipe. Ventilation needed for welding Concrete pump limitations (i.e., max aggregate size and pumping distance)
Internal Joint Sealing Steel Expansion Rings and Rubber Gaskets	Low	24”–108”	**Infiltration/Exfiltration at Joints** Low resource commitment. Prevents further deterioration due to infiltration or exfiltration and loss of backfill.	More applicable to RCP than flexible pipe. If used on CMP or plastic, pipe must not be deflected beyond 10%. Generally, pipe must be large enough for human entry.
Deform Re-form HDPE	Med. to High	18”–30”	**Invert Repair for non-human entry pipes, Corrosion, Abrasion, Infiltration/Exfiltration.** Smaller construction footprint than sliplining. Easy to transport and handle. Viable technique for storm drains and culverts. No annular space grouting required. Capacity maximized	As of this writing, the availability of this product in the U.S.A. is extremely limited. Specialized equipment and trained personnel needed. Only circular shapes possible. Cannot accommodate diameter variations and joint settlement. Range of available pipe diameters is limited.

Technique & Materials	Const. Cost	Size Range	Problem Resolution and Advantages	Limitations
Machine Spiral Wound PVC	High	<108” (≤ 42” for radially expanded method)	**Invert Repair for non-human entry pipes, Corrosion, Infiltration/Exfiltration.** Smaller construction footprint than sliplining and other methods because liner is formed on site and no pipe storage is necessary. Easy to transport and handle. Viable technique for storm drains and most culverts. Can access through MH or DI. Annular space grouting not needed for radially expanded method. Large range of diameters and shapes can be selected within the range of the winding machine including boxes and arches.	May become brittle upon freezing. Continuous interlocking joint system can be problematic if the host pipe diameter fluctuates. Specialized equipment and trained personnel needed. Reduction in hydraulic capacity can be significant for smaller diameter host pipes. Annular space grouting required for some spiral wound methods. Not recommended in abrasive environments.
Air Placed Concrete and Sprayed Epoxy or Polyurethane Lining	High	N/A	**Drainage Structure Rehabilitation** Will provide a corrosion barrier to reinforcing steel for concrete drainage inlets and manholes. May be used to make concrete drainage structures watertight.	Epoxy and polyurethane limited to concrete drainage structures. Specialized equipment and trained personnel needed.

Technique & Materials	Const. Cost	Size Range	Problem Resolution and Advantages	Limitations
Cementitious Pipeliners Cementitious Mortar, Calcium Aluminate or Geopolymer Mortar	Med. High	12”–36”	**Invert Repair for non-human entry pipes, Corrosion, Abrasion, Infiltration/Exfiltration.** Cement in concrete prevents or significantly retards the oxidation of the interior base metal (rust) of CSP Can accommodate bends and imperfections in host pipe Smooth interior surface may improve hydraulic characteristics by reducing roughness coefficient. Lateral connections are easily handled	Specialized equipment and trained personnel needed. Cement is subject to break down if runoff is acidic and/or contains sulfates and mix design is not appropriate. See HDM Table 854.1A. Cement mortar lining is not abrasion resistant.
Man-Entry Lining with Pipe Segments FRP, FRC, HDPE, PVC	High	42”–198”	**Invert Repair for Large Diameter Pipes, Corrosion, Infiltration/Exfiltration.** Can be manufactured in virtually any shape and length. Lightweight and easy to handle. Option for invert lining only. Sections easily cut to form connections.	Installation is labor intensive and slow. Restraint system may be required during grouting.

Technique & Materials	Const. Cost	Size Range	Problem Resolution and Advantages	Limitations
Internal Chemical Grouting (joints) Acrylamide Gel, Polyurethane Foam, Urethane Gel, Acrylic Gel, and Acrylate Gel	High	< 24”	**Infiltration/Exfiltration at Joints** Robotic sealing packer used to access small diameter pipes. Can be used to stop severe infiltration prior to other repairs.	20 years or less service life. Quality control difficult. Acrylic gels limited for use in systems under the groundwater table. Success may depend on soil and moisture variability. Formulating the correct mixture may be dependent on trial and error on a case-by-case basis, rather than scientific principles. If conditions change, the grout may shrink. Grouting cannot be used for joints that are severely offset. It is also inappropriate for longitudinal cracks and severe circular cracks. Specialized equipment and trained personnel needed.
Invert steel Armor Plating	High	≥ 48”	**Invert Repair for Concrete and Metal Pipe** Provides abrasion resistance. Can easily modify thickness to meet needs. Limited to bottom third of pipe.	Difficult to attach to RCP or plastic.
Stainless Steel or PVC Repair Sleeve with Expanding Polyurethane Grout	Low	18”–54” (Stainless Steel) 18”–108” (PVC)	**Infiltration at Joints** Remote installation for small diameter pipes. Can be used to stop severe infiltration prior to other repairs. Large range of diameters can be repaired. Available in 18”, 24” and 36” individual lengths, which may be connected if, needed. Can be used to repair deformed flexible pipe.	Local repairs only

8.1.1.2 Failing Culvert Solutions Summary

The following table is a summary of failing culvert solutions based on host pipe size, ADT and cover. When there is a combination of low ADT and shallow cover, open cut dig-and-replace should always be the first option considered. The opposite is true for high ADT (i.e., freeways) and/or deep fill.

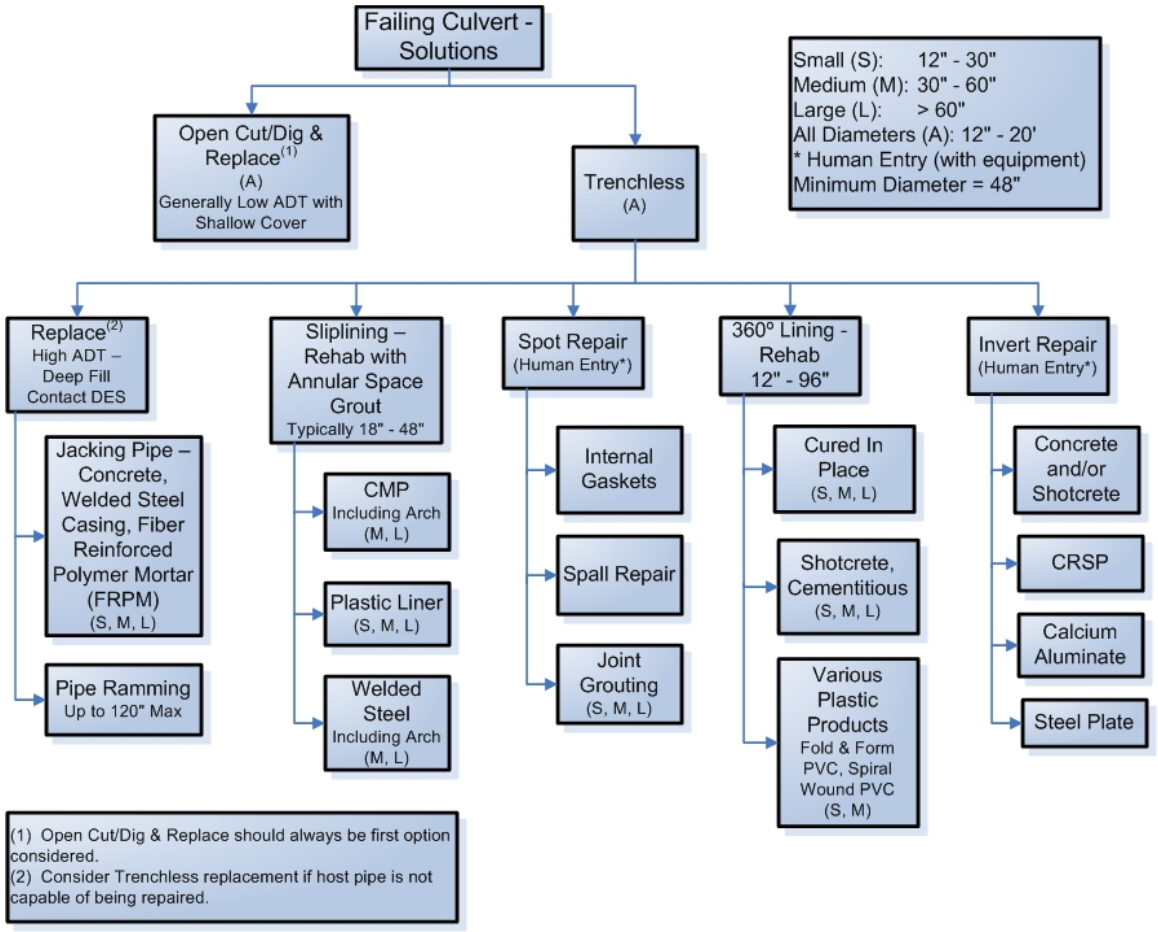

The following references provide some additional guidelines for comparison of alternative techniques:

FHWA Culvert Restoration Techniques Report No. FHWA/CA/TL-93-14, Part I (7) "Guidelines for Comparison of Alternative Techniques."

FHWA Culvert Repair Practices Manual Volume 1, Chapter 6, pages 6-3 and 6-4 and Chapter 7, page 7-24.

8.1.2 Process Flow Charts

For guidance on the overall process for analyzing problems and solutions in conjunction with the Table of alternative repair techniques that are summarized in Index 8.1.1, see FHWA Culvert Repair Practices Manual Volume 1, Chapter 3, Figures 3.2, 3.3, 3.4 and Table 3.1 on pages 3-9, 3-10, 3-12 and 3-15:

- Analysis of problems and solutions. Overall process

- Determining the Cause and the Type of Problem
- Process for Analysis of Potential Solutions
- Summary of Information on Alternatives

9.1 REPLACEMENT

9.1.1 Repair Verses Replacement

Refer to FHWA Culvert Repair Practices Manual Volume 1, Chapter 7, pages 7-27.

Choosing whether to repair or replace the deficient culvert depends upon several considerations:

- The condition of the culvert and its suitability to repair or rehabilitation
- Current and future loading conditions in the area and for the roadway served by the culvert.
- Alignment and other physical factors related to the culvert. Significantly changed (or planned) roadway geometry or embankment depths may indicate a culvert replacement rather than a simple repair. Conversely, for relatively short culverts with smaller diameters under shallow cover on rural highways with low ADT, it may be more cost-effective to replace.
- Ability to conform to current standards.
- Availability of funding, fabrication, construction expertise of local contractors, or construction capabilities of maintenance forces.
- User costs and out-of-service costs during either repair or replacement.
- Environmental demands or aesthetic considerations.

Certainly, the choice between repair and replacement should be based upon a consideration of all of the factors. A simple, arbitrary, and un-researched blanket decision should be avoided. The costs of repair and continued operation versus the costs and ultimate operation of a replacement culvert may be significant and the alternative should be chosen with this significance in mind. A worksheet similar to Table 7.6 in FHWA Culvert Repair Practices Manual Volume 1, Chapter 7, page 7-27 is suggested as a systematic approach to deciding whether to repair or replace. As previously discussed under the 'Caltrans host pipe structural philosophy' (see Index 6.1.1), if the host pipe is not capable, or being made capable of sustaining design loads, it should be replaced rather than repaired.

9.1.2 Replacement Systems

If the decision has been made that replacement will provide the most satisfactory solution to the problems being encountered at the culvert site, various replacement methods can be considered.

For some large culvert replacements, options may include consideration of bridge construction. However, for most locations replacement will consist of installing a new culvert.

Generally, the culvert replacement will fall under the categories of

- open trench construction, or
- trenchless construction.

9.1.2.1 Open Cut (Trench) Method

The open cut trench method is the most commonly used method for replacing a culvert. The general procedure is to excavate a trench and remove the existing culvert, prepare the appropriate bedding for the new culvert, install the new culvert and fill the trench around the pipe with either slurry/flowable type material or with compacted lifts of soil. The pavement is then patched to reasonable limits beyond the edge of the pipe trench. For detailed guidelines for installing culverts in a trench, see Caltrans Standard Plans A62D, A62DA, A62E, A62F, Sections 19 and 61 through 67 of the Standard Specifications, Chapter 850 of the HDM, and Section 2 of this D.I.B. for physical standards. Also see appropriate Standard Special Provisions (SSP's). Controlled low-strength material (CLSM) is described Section 19-3.03I of the Standard Specifications and in FHWA Culvert Repair Practices Manual Volume 1, Chapter 7, page 7-34 and Slurry Cement backfill is described in Section 19-3.03F of the Standard Specifications. A memo dated 9/27/01 by Caltrans Corrosion Technology Unit recommended allowance of placing both slurry and CLSM as backfills with both aluminum and aluminized (type 2) pipe.

Open Trench Construction Mrn-1 PM 11.0 Webb Creek

The flow chart under Index 2.1.1 outlines the general thought process and factors involved in determining which type of material to select for replacement using the open cut (trench) method.

HDM Index 857.2 provides general guidelines for alternative pipe culvert selection using the AltPipe web based tool that is located on the Headquarters Division of Design alternative pipe culvert selection website at the following web address: http://www.dot.ca.gov/hq/oppd/altpipe.htm.

9.1.2.2 Trenchless Excavation Construction (TEC) Methods

Trenchless excavation construction (TEC) methods include all methods of installing culverts below grade without direct installation into an open-cut trench. To date, the majority of trenchless work for the department has been accomplished by utility owners through the permit process with the design and construction responsibilities and liability placed on the utility owner. However, for culvert replacement, trenchless excavation is usually a preferred option over open trench construction when very high roadway fills

and/or high traffic volumes exist without the availability of a reasonable detour route. No one method is suitable for all types of soil and site conditions. The selection of compatible methods is site specific and highly dependent on subsurface conditions. In addition to adequate specifications and guidelines for contractors to follow, a thorough soils investigation and an accurate underground utility location plan are critical for minimizing subsequent construction problems and claims. At the present time, there are no standard specifications or standard special provisions developed for most of the TEC methods presented herein. The following link provides non-standard special provisions (nSSP's) for pipe jacking, RCB jacking, augur boring and pipe ramming:

http://onramp.dot.ca.gov/hq/design/drainage/index.php

When used in a PS & E and submitting to Office Engineer, the designer must request approval/sponsorship from the Chief, Office of Highway Drainage Design within the Division of Design.

Per Index 7.1.6.2, no proposal for the placement of a trenchless culvert installation should be made without obtaining a recommendation from Geotechnical Design based on comprehensive geotechnical investigations that are summarized in the Geotechnical Design Report. The importance of early communication with the Geotechnical Design specialist from the Division of Engineering Services (DES) cannot be over-emphasized. In summary, prior to including any of the above-referenced nSSP's in a project, the designer must:

- Request a geotechnical Design Report with a minimum of two borings for pipe jacking and recommendation for type of pipe jacking (pipe jacking, auger boring or pipe ramming)
- Select pipe materials based on fill height (coordinate with underground structures within DES if needed and use Standard Plans for RCP)
- Use and edit the above-referenced nSSP's accordingly
- Request approval/sponsorship for nSSP(s) from the Chief, Office of Highway Drainage Design within the Division of Design prior to O.E. submittal.

Occasionally, for major projects involving trenchless technology, depending on complexity, it may be more efficient to use a consultant where in-house expertise is not available for planning and design.

These guidelines go beyond the Encroachment Permit Manual tunneling requirements, which the designer should also be familiar with.

For a description of the various trenchless excavation construction (TEC) techniques, see FHWA Culvert Repair Practices Manual Volume 1, Chapter 7, pages 7-38 through 7-45. The following tables were copied with permission from NCHRP Synthesis of Highway Practice 242 (Iseley, T. and S.B. Gokhale):"Trenchless Installation of Conduits Beneath Roadways", Transportation Research Board, National Research Council, Washington, D.C., 1997, and supplement the TEC information given in FHWA Culvert Repair Practices Manual Volume 1, Chapter 7, pages 7-38 through 7-45:

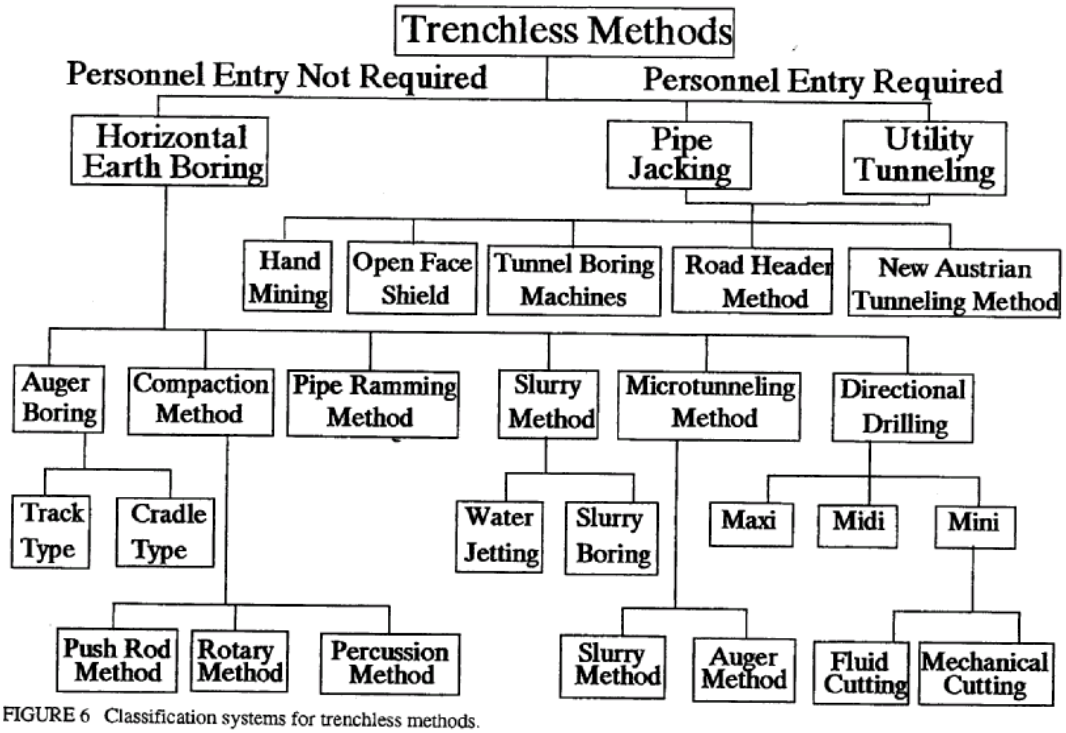

FIGURE 6 Classification systems for trenchless methods.

* New Austrian tunneling method is shotcrete-supported tunneling

DESCRIPTION OF TRENCHLESS CONSTRUCTION METHODS

Method Type	Method Description
I. Techniques Not Requiring Personnel Entry—Horizontal Earth Boring (HEB)	
Auger Boring (AB)	A technique that forms a borehole from a drive shaft to a reception shaft by means of a rotating cutting head. Spoil is transported back to the drive shaft by helical wound auger flights rotating inside of steel casing that is being jacked in place simultaneously. AB may provide limited tracking and steering capability. It does not provide continuous support to the excavation face. AB is typically a 2-stage process (i.e. casing installation and product pipe installation).
Slurry Boring (SB)	A technique that forms a borehole from a drive shaft to a reception shaft by means of a drill bit and drill tubing (stem). A drilling fluid (i.e. bentonite slurry, water, or air pressure) is used to facilitate the drilling process by keeping the drill bit clean and aiding with spoils removal. It is a 2-stage process. Typically, an unsupported horizontal hole is produced in the first stage. The pipe is installed in the second stage.
Microtunneling (MT)	A remotely controlled, guided pipe-jacking process that provides continuous support to the excavation face. The guidance system usually consists of a laser mounted in the drive shaft communicating a reference line to a target mounted inside the MT machine's articulated steering head. The MT process provides ability to control excavation fact stability by applying mechanical or fluid pressure to counterbalance the earth and hydrostatic pressures.
Pipe Ramming (PR)	A technique for installing steel casings from a drive shaft to a reception shaft utilizing the dynamic energy from a percussion hammer attached to the end of the pipe. A continuous casing support is provided and over excavation or water is not required. This is a 2-stage process.
Soil Compaction (SC)	This method consists of several techniques for forming a borehole by in-situ soil displacement using a compacting device. The compacting device is forced through the soil, typically from a drive shaft to a reception shaft, by applying a static thrust force, rotary force and/or dynamic impact energy. The soil along the alignment is simply displaced rather than being removed. This is a 2-stage process.
II. Techniques Requiring Personnel Entry	
Pipe Jacking (PJ)	A pipe is jacked horizontally through the ground from the drive shaft to the reception shaft. People are required inside the pipe to perform the excavation and./or spoil removal. The excavation can be accomplished manually or mechanically.
Utility Tunneling (UT)	A 2-stage process in which a temporary ground support system is constructed to permit the installation of a product pipe. The temporary tunnel liner is installed as the tunnel is constructed. The temporary ground support system can be steel or concrete tunnel liner plates, steel ribs with wood lagging, or an all-wood box culvert. People are required inside the tunnel to perform the excavation and/or spoil removal. The excavation can be accomplished manually or mechanically.

CHARACTERISTICS OF TRENCHLESS CONSTRUCTION METHODS

Type[a]	Pipe/Casing Installation Mode	Suitable[b] Pipe/casing	Soil Excavation Mode	Soil Removal Mode
AB	Jacking	Steel	Mechanical	Auguring
SB	Pulling/Pushing	All types	Mechanical and Hydraulic	Hydraulic, Mechanical Reaming and Compaction
MT	Jacking	Steel, RCP, GFRP, PCP, VCP, DIP	Mechanical	Auguring or Hydraulic (Slurry)
PR	Hammering / Driving	Steel	Mechanical	Auguring, Hydraulic, Compressed Air, or Compaction
SC	Pulling	Steel, PVC, HDPE	Pushing	Displacement (in-situ)
PJ	Jacking	Steel, RCP, GFRP	Manual or Mechanical	Augers, Conveyors, Manual Carts, Power Carts, or Hydraulic
UT	Lining	Steel or Concrete Liner Plates, Ribs w/Wood Lagging, Wood Box	Manual or Mechanical	Augers, Conveyors, Manual Carts, Power Carts, or Hydraulic

[a] AB–Auger Boring; SB–Slurry Boring; MT–Microtunneling; PR–Pipe Ramming; SC–Soil Compaction;PJ–Pipe Jacking; UT–Utility Tunneling.

[b] Steel–Steel Casing Pipe, RCP–Reinforced Concrete Pipe, GFRP–Glass-Fiber Reinforced Plastic Pipe, PCP–Polymer Concrete Pipe, VCP–Vitrified Clay Pipe, DIP–Ductile Iron Pipe, PVC–Polyvinyl Chloride Pipe, HDPE–High Density Polyethylene Pipe.

FACTORS AFFECTING THE SELECTION AND USE OF TRENCHLESS TECHNOLOGY (TT) ALTERNATIVES

Factors	Description
Diameter of Drive	Need to identify which methods are suitable to install the pipe required for the drive from project scope. As the diameter increases, the complexity and risks associated with the project also increase. Some methods are unsuitable for some diameters.
Length of Drive	Need to identify which methods are suitable for installing the pipe for the drive lengths required by the project scope. As the length increases, the complexity and risks associated with the project also increases. Length of drive may rule out certain methods or result in cost penalties for mobilization for short distances.

FACTORS AFFECTING THE SELECTION AND USE OF TRENCHLESS TECHNOLOGY (TT) ALTERNATIVES - CONTINUED

Factors	Description
Abandonment	Under what conditions should the work be stopped and the line abandoned. What will be the abandonment procedures?
Existing Underground Utilities	Need to determine location of all existing underground utilities and underground structures so that the likelihood of obstruction or damage can be addressed for each TT alternative. Actions need to avoid obstruction should be identified for each prospective method.
Existing Above Ground Structures	The likelihood of ground movement caused by the proposed TT alternatives should be evaluated. A possibility of heaving the roadway of causing ground subsidence should be evaluated. The parameters to be monitored to ensure minimum effect on adjoining structures must be identified.
Obstructions	The likelihood of encountering obstructions (either naturally occurring or manmade) should be evaluated. The proposed equipment must be able to handle the anticipated obstruction. For example, some techniques might permit steering around or crushing obstacles up to a certain size.
Casing	Is a casing pipe required? Or can a product pipe be installed directly? If a casing pipe is required, does the annular space between the product pipe and the casing pipes need to be filled? If so, with what materials? Does the casing pipe need to have internal and/or external coatings? What distance should the casing extend beyond the pavement edge?
Soil Conditions	Need to accurately determine the actual soil conditions at the site. Is the proposed TT equipment compatible with the anticipated soil conditions? Where is the water table? Can the equipment function in unstable ground conditions? Or, will the soil conditions need to be stabilized prior to the trenchless process being employed? If so, how? For example, will the soil need to be dewatered? Is dewatering reasonable at the specified project site? Are contaminated soils or groundwater anticipated? What is the likelihood of ground heaving or settlement? Need to establish allowable limits for ground movement and need to determine how ground movement will be measured.

FACTORS AFFECTING THE SELECTION AND USE OF TRENCHLESS TECHNOLOGY (TT) ALTERNATIVES - CONTINUED

Factors	Description
Drive/Reception Shafts	Need to make sure adequate space is available at the project site to provide the required space for the shafts. The working room available may limit the length of pipe segments that can be handled. For example, 40 ft steel pipe segments will minimize field-welding time and may be desirable from a construction perspective, but may not be achievable due to site constraints. These constraints need to be identified early in the process.
Accuracy	Need to determine alignment and grade tolerance desired for the installation. Typically, the tighter the tolerance, the higher the cost of installation will be. How will this level of accuracy be measured?
Steer ability	What level of sophistication is needed to track the leading edge of the cutting head and being able to steer it? If the system gets off line and grade, what limits need to be placed on corrections to prevent overstressing the drill stem or pipe.
Bulkheads	Bulkheads are used to provide end seals between the casing and product pipe. Need to determine if they should be required. If so, what should they be made of?
Materials	Need to determine what materials the casing and product pipe should be (i.e., Steel, RCP, PVC, GFRP, HDPE, etc.) and joint requirements. Selection must be based on use, environmental conditions, and compatibility with the trenchless method.
Ventilation/Lighting	Under what conditions will ventilation and/or lighting be required. How will adequate ventilation and/or lighting be determined?
Measurement/Payment	How and who will determine the measurement by which the contractor will be compensated? What are the conditions of payment?
Submittals	What information is going to be required for the contractor to supply? Who will receive the submittal information? What are the qualifications of the reviewers? What are the construction risks and who will accept these risks (contractor or owner)?

OVERVIEW OF TRENCHLESS METHODS

Method	Primary Applications	Range of Applications			Type of Pipe	Accuracy
		Depth	Length	Diameter		
Auger Boring (AB)	Crossings (All types)	Varies	40-500 ft	8-60 in	Steel	Medium
Microtunneling (MT)	Sewer Installations	Varies	80-750+ ft	10 in-10+ft	Steel. RCP, Fiberglass, GFRP, DI, VCP, PVC	High
Maxi & Midi Horizontal Directional Drilling	Pressure lines, water, gas, cable	<160 ft	400-6000 ft	3-54 in	Steel, HDPE	Medium
Mini-Horizontal Directional Drilling (Mini-HDD)	Pressure lines, water, gas, cable	<50 ft with walkover system	40-600 ft	2-14 in	Small diameter steel pipe, HDPE, DI, PVC, Copper service lines, cable	Medium
Pipe Ramming	Crossings	Varies	40->300 ft	4-138 in	Steel	Low
Pipe Jacking (PJ)	Sewers, Pressure Lines, Crossings	Varies	No theoretical limit - 1600 ft spans achieved	42-120 in	RCP, Steel, Fiber glass	High
Utility Tunneling	Sewers, Pressure lines, Crossings	Varies	No theoretical limit	≥ 42 in	Cold formed steel plates, pre-cast concrete segments	High

OVERVIEW OF TRENCHLESS METHODS (cont.)

Method	Working Space Required	Compatible Soil Type	Operator Skill Requirements	Chief Limitations
Augur Boring (AB)	Entry & Exit bore pits. Length 26-36 ft Width 8-12 ft. Room for storing augers, casing etc.	Variety of soils conditions (see Table 9)	High	High capital cost for equipment, high set-up cost (bore pits); cannot be used in wet runny sands, soil with large boulders.
Horizontal Directional Drilling (HDD)	Access pits not required. Space for set up of rig and drilling fluid tank: 400 ft x 200 ft	Clay is ideal. Cohesionless sand and silt require bentonite. Gravel and cobbles are unsuitable.	High degree of knowledge of downhole drilling, sensing and recording. Training essential.	Requires very high degree of operator skill. Not suitable for high degree of accuracy such as gravity sewer application. Can install only pipes with high tensile strength e.g., steel, HDPE.
Mini-Horizontal Directional Drilling (Mini-HDD)	Equipment is portable and self-contained. Requires minimal area.	Soft soils, clay and sand. Unsuitable for rocks and gravel.	Same as HDD	Accuracy dependent on range of the electromagnetic receiver $\leq$ 50 ft
Pipe Ramming	Function of pipe size. Pit sizes vary from 10-35 ft	Almost all soil types. Earthen plug formed at the leading edge of casing preventing soil flowing into pipe.	Fair skill & knowledge required to determine initial alignment, make decisions on open or close faced bore, lubrication requirements, etc.	Limited control over line and grade. A large piece of rock or boulder can easily deflect pipe from design path. Pipe has tendency to drop and/or come up to the surface. For larger pipe diameters equipment cost increases substantially. Specialized operation requiring great deal of planning and coordination. High capital cost.

OVERVIEW OF TRENCHLESS METHODS (cont.)

Method	Working Space Required	Compatible Soil Type	Operator Skill Requirements	Chief Limitations
Microtunneling (MT)	Primary Jacking Pit: 13 ft long, 10 ft wide, smaller retrieval pit, room for slurry tanks, pipe storage.	Variety of soil conditions including full-face rock and high groundwater head.	High to operate sophisticated equipment	High capital cost and set-up costs, obstructions.
Pipe Jacking	Jacking pit is a function of pipe size. Pit sizes vary from 10-30 ft	Stable granular and cohesive soils are best. Unstable sand is least favorable. Large boulders cause frequent work stoppage. Method can be executed with any ground condition with adequate precautions.	This is a specialized operation requiring a great deal of skill and training. Line & grade tolerances are usually very tight and corrective actions can be very expensive.	Specialized operation requiring great deal of planning and coordination. High capital cost.
Utility Tunneling	Smaller surface area as compared to PJ due to compactness of the liner system. Access pit size varies from 9 to 25 ft.	Same as PJ	Same as PJ	High capital and set-up cost. Carrier pipe is required to carry the utility and the space between the carrier pipe and liner has to be grouted to provide adequate support unless a permanent lining system is used.

APPLICABILITY OF TRENCHLESS TECHNIQUES IN VARIOUS SOIL CONDITIONS

	Soil Type	**Cohesive Soils (Clay)**			**Cohesionless Soils (sand/silt)**					
Soil and Groundwater	N Value (Standard Penetration Value as per ASTMD 1452)	N<5 (soft)	N=5-15 (firm)	N>15 (stiff-hard)	N<10-30 (loose)	N=10-30 (medium)	N>30 (dense)	High Ground Water	Boulders	Full-Face Rock
Applications	Auger Boring (AB)	○	*	*	○	*	*	x	≤33%φ[1]	≤12ksi
	Microtunneling (MT)	*	*	*	●	*	*	*	≤33%φ[1]	≤30ksi
	Maxi/Midi-Horizontal Directional Drilling (HDD)	○	*	*	○	*	*	○	○	≤15ksi
	Mini-Horizontal Directional Drilling (Mini-HDD)	○	*	*	○	*	*	○	x	x
	Impact Moling/Soil Displacement	○	*	*	x	*	●	x	x	x
	Pipe Ramming	*	*	*	●	●	●	○	≤90%φ	x
	Pipe Jacking (PJ)									
	W/ TBM	○	*	*	○	*	*	○	○	≤30ksi
	W/ Hand Mining (HM)	x	*	*	○	*	*	x	≤95%φ	○
	Utility Tunneling (UT)[2]									
	W/ TBM	○	*	*	○	*	*	○	○	≤30ksi
	W/ Hand Mining (HM)	○	*	*	○	*	*	○	≤95%φ	*

*****: Recommended ○: Possible x: Unsuitable

(This table is based on the assumption that experienced operators using proper equipment perform work)

[1] Size of largest boulder versus minimum casing diameter (φ)

[2] Ground conditions may require either a closed face, earth pressure balance, or slurry shield.

9.1.2.2.1 Pipe Jacking

Pipe jacking is a trenchless method for installing a pipe through the ground from a drive shaft to a reception shaft. The pipe is propelled by jacks located in the drive shaft. The jacking force is transmitted through the pipe to the face of the pipe jacking excavation.

The pipe jacking method may be used to install reinforced concrete or steel pipe with diameters ranging from as low as 18 inches to as great as 132 inches. However, both excavation and spoil removal processes usually require workers inside the pipe during the jacking operation. Therefore the minimum recommended diameter is 42 inches in order for workers to have access through the pipe to the leading end. This method is widely used, particularly where deep excavations are necessary or where conventional open excavation and backfill methods may not be feasible.

During the jacking process, soil is removed either mechanically or manually from the leading end of the pipe. Either an auger or conveyor can be used to transport the excavated material back to the jacking pit. See pictures below:

Once the jacking process is started, it typically is specified that the process be continued uninterrupted until completion so as to keep the pipe from "freezing" in place. Lubricants often are applied to the exterior of the pipe to be jacked to reduce frictional resistance.

Two types of loads are imposed on pipe installed by the jacking method:

- the axial load due to the hydraulic jacks,
- and earth loading due to overburden. This vertical load generally becomes effective only after the installation is complete.

The axial or thrust jacking loads are transmitted from one pipe section to another through the joint surfaces. It is essential that the pipe ends are parallel so that there will be a relatively uniform distribution of forces around the periphery of the pipe. Specifying a higher class of pipe provides little or no gain in axial crushing resistance.

As with any trenchless excavation construction method, the feasibility of pipe jacking for a given site must be established before construction through exploratory soil borings or other information relating to the composition of the soil likely to be encountered. Pipe jacking requires that the soil be relatively uniform in composition and free from large boulders or rock outcroppings.

The local variations in pressure on the leading section can result in damage to the culvert sections, misalignment, and voids in the fill. Similarly, jacking through groundwater bearing strata may present difficulties, especially in sandy soils as the saturated soil may flow into the pipe. This can lead to reduced soil densities above and around the pipe.

RCP Pipe Jacking Example

For long pipelines and culverts, it may be necessary to establish intermediate-jacking stations, so that predetermined jacking force limitations will not be exceeded. The location of intermediate jacking pits is decided after consideration of several factors. Since a primary advantage of this method is the elimination of traffic impacts, intermediate jacking pits also should be located to minimize traffic disturbance. Storage of materials and equipment is also a concern and may require temporary guardrail or traffic barrier to shield traffic from the site. Diversion of stream or overland flow will also be necessary to prevent flooding of the jacking pit.

During the jacking procedure, care should be given to personnel safety. Hydraulic jacks that can cause breakage of materials exert heavy pressures. Hydraulic hose lines also may rupture and cause injury.

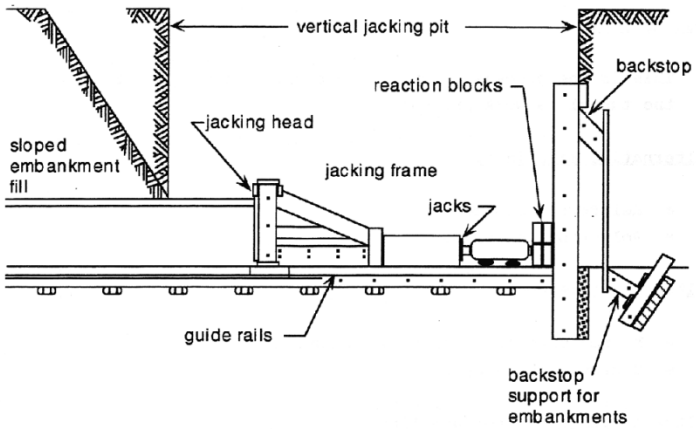

A typical equipment setup for jacking concrete pipe is as shown schematically above.

9.1.2.2.1.1 Auger Boring

Smaller diameter bores than pipe jacking may be accomplished using auger boring (8 in. to 60in.). This method involves simultaneously jacking a welded steel pipe casing while removing the spoil inside with a continuous rotating flight auger. The major components include a track system, jacking machine, casing pipe, cutting head and augers. Besides using the casing itself as a trenchless culvert replacement, this method is used when encasements are required for utility crossings by others. The annular space between the 'carrier' pipe and casing may or may not be grouted. More information is provided in Chapter 600, Index 623.1A of Caltrans Permits Manual:

http://www.dot.ca.gov/hq/traffops/developserv/permits/pdf/manual/Chapter_6.pdf

Auger Boring 24 in. x 130 LF (0.5 in. Casing) Under Sut-99-PM 26.6/37.4

Jacking Pit 36 LF x 12 LF, Receiving Pit 12 LF x 8 LF (Approx 3 ft Deep)

9.1.2.2.2 Pipe Ramming

A variation on pipe jacking is noted in a process called pipe ramming involving a steam-powered hammer (much like a pile driver) instead of a pneumatic jack. Because of the energy involved with each blow, a mandrel must precede the driven pipe. Similar to the jacking process, the hammering process requires the removal of displaced soil and material as the pipe moves into the embankment.

Pipe Ramming Under U.S. 50 Near Rancho Cordova, CA

A viable alternative to using RCP or steel pipe for pipe jacking is fiber reinforced polymer concrete pipe (FRPC) or reinforced polymer mortar (RPMP), which is about a third of the weight per foot of precast RCP. See FHWA Culvert Repair Practices Manual Volume 1, page 2-27 and Index 2.1.1.1.3.1 of this D.I.B.

It should be noted that jacking flexible pipes such as 'Corrugated Metal Pipe' usually requires a larger diameter and stiffer pipe material (casing) to be jacked. Other reasons for requiring encasement may include:

- To avoid future roadway excavation for repair, and
- To ensure the structural integrity of the roadbed and pipe.

9.1.2.2.3 Microtunneling

No universally accepted definition for microtunneling (MT) exists. However, MT can be described as a remotely controlled, guided pipe jacking process that provides continuous support to the excavation face. MT is a trenchless construction method for installing culverts beneath roadways in a wide range of soil conditions while maintaining close tolerances to line and grade from the drive shaft to a reception shaft. The most common way to categorize MT is by the spoil removal system (i.e., slurry or auger). A slurry system is more capable of handling wet, unstable ground conditions. Both augur and slurry MT systems have five independent systems:

- Microtunneling boring machine

- Jacking or propulsion system
- Spoil removal system
- Laser guidance and remote control system; and
- Pipe lubrication system

The most common materials used for MT are RCP, ductile iron, welded steel, and fiber reinforced polymer concrete pipe (FRPC) or reinforced polymer mortar (RPMP). The range in diameter experienced in the U.S. is from 12 inches to 144 inches, however, the most common range is from 24 inches to 48 inches.

Settlements typically associated with microtunneling, or other tunnel construction methods, include two types: large settlements and systematic settlements. Large settlements occur primarily as a result of over excavation by the tunneling or microtunneling machine leading to the loss of stability at the face and the creation of voids above the installed pipe or tunnel. Large settlements are almost always the result of improper operation of the machine, or sudden unexpected changes in ground conditions. Large settlements must be avoided through geotechnical investigation and good workmanship by the Contractor. The importance of a skilled and experienced machine operator cannot be over-emphasized.

Systematic settlements are primarily caused by the collapse of the overcut, or annular space, between the jacking pipe and the excavation, and to a lesser extent by elastic deformations of the soil ahead of the advancing tunnel. The overcut is necessary in microtunneling and pipe jacking to allow lubrication to be injected, to decrease jacking forces to reasonable levels, and to facilitate steering of the microtunnel boring machine (MTBM). During tunneling, or after the tunnel is completed, the soil may collapse or squeeze onto the pipe, resulting in settlements at the surface. Systematic settlements can be controlled by limiting the radial overcut the contractor is allowed to use, as well as filling the annulus with bentonite lubricant during tunneling, and with cement grout after tunneling is completed. Systematic settlements generally decrease with distance above the crown of the pipe and with lateral distance from the centerline of the pipe. Systematic settlements decrease as the annular overcut decreases, and as soil consistency (density, stiffness) increases. Systematic settlements also decrease as pipe diameter decreases. See Index 9.1.2.3, settlement monitoring, under other consideration for TEC.

For machine tunneling with steel or concrete segments used as temporary supports, an overcut or gap is created between the excavated bore and the support ring outside diameter as the supports are erected and bolted into place inside the tail of the shield. The tunnel boring machine (TBM) is propelled off the previously installed supports, and as the support ring exits the shield, a gap is created. For segmental steel or concrete rings, the ring can be expanded against the soil surrounding the bore as the rings exit the shield. In this case, a special spacer segment is used to fill the gap in the circumference created by the expansion of the rings against the soil. The remaining gap is then grouted.

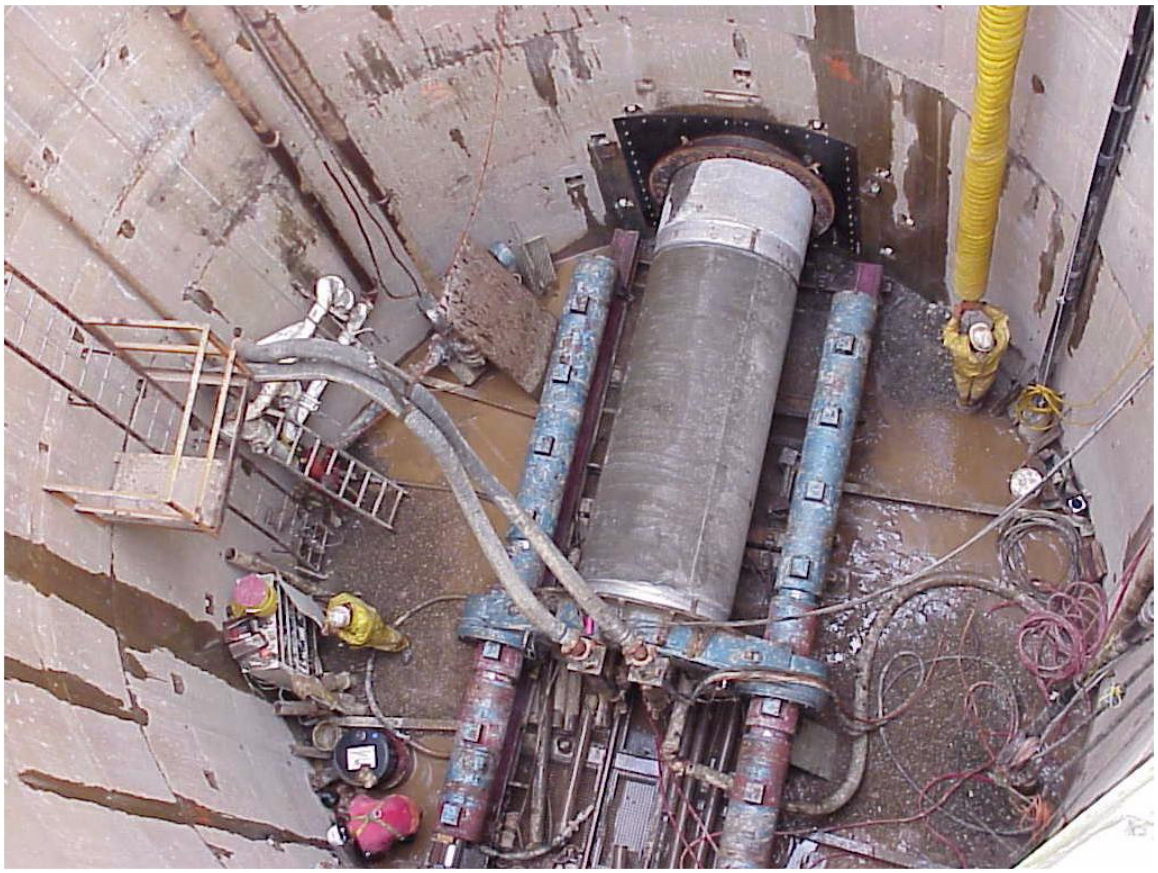

Jacking Pit for 48 inches RCP Microtunneling Project Under American River, Sacramento

9.1.2.2.4 Pipe Bursting and Pipe Splitting

Pipe Bursting (for brittle materials) and Pipe Splitting (for ductile materials) are processes in which the trenchless pipe replacement is carried out by pulling a new pipe (typically fusion welded HDPE) behind a cone ended bursting tool. The bursting tool is pneumatically or hydraulically driven and effectively hammers its way through the host pipe, displacing the fragments into the surrounding soil, while simultaneously pulling the new pipe into place behind it. Pipe Bursting is the only trenchless method that allows for the upsizing of the original pipe

Pipe bursting can be used on almost any type of existing pipe except ductile iron or heavily reinforced concrete. Segmental replacement pipe can be used in lieu of fused pipe, but requires jacking equipment to force it in behind the bursting unit. Currently the applicable size range is limited to between 2-54 inches, with larger units becoming available. The typical length of pipe replaced by pipe bursting is slightly over 330 feet, but greater lengths have been done. In addition, depth, soil conditions, peripheral utilities and service connections will dictate whether pipe bursting is appropriate.

9.1.2.2.5 Trenchless Replacement References

Caltrans non-standard special provisions for pipe jacking, augur boring and pipe ramming (see Index 9.1.2.2):

http://onramp.dot.ca.gov/hq/design/drainage/index.php

NCRHP Synthesis 242 – 'Trenchless Installation of Conduits Beneath Roadways'. http://www.usroads.com/journals/rmej/9804/rm980403.htm

AASHTO Highway Drainage Guidelines/Volume XIV, 5.1.4.4 Pipe Bursting (Existing pipe material must be clay, RCP, cast iron or PVC).

ASCE Standard Construction Guidelines for Microtunneling, December 28, 1998.

So.Cal. APWA and the AGC of California in their STANDARD SPECIFICATIONS FOR PUBLIC WORKS CONSTRUCTION-MICROTUNNELING 2000 EDITION.

No-Dig Engineering Journal, published by Trenchless Technology Incorporated.

Guidelines for Pipe Ramming TTC Technical Report #2001.04 December 2001

9.1.2.3 Other Considerations for TEC

The following guidelines are for trenchless projects where the potential for subsidence (loss of ground) and risk is high.

High-tech methods do not necessarily mean safer methods. The amount of risk depends on the contractor's experience in addition to a number of factors that require engineering judgment such as: depth of cover, diameter of tunnel, proposed methods, tunnelman's classification of materials to be tunneled (cohesionless sands, gravels, and cobbles or boulders below groundwater surface are probably the worst) and potential obstructions.

In house designs should consider the following four categories. Depending on complexity, it may be necessary to hire a consultant to perform the design:

1) Geotechnical Investigation
2) Settlement Monitoring
3) Contractor Submittals
4) Contract Inspection

Items 2 and 3 should be addressed in the Plans and Specifications and should be based on the results of Item 1. Geotechnical Design within the Division of Engineering Services (DES) should review the Geotechnical Reports and the Plans and Specifications prior to bid. If cohesion less materials below the ground water table or "running or flowing ground" conditions are identified, special precaution should be taken in the permit review. The Contractor Submittals to the Engineer required in the Contract Documents should be provided for Caltrans review prior to starting work. The Contract Inspection should depend on the proposed trenchless methods, project complexity, and risk to the public.

1. Geotechnical Investigation

A minimum of two borings, one on each side the highway crossing is recommended. An additional boring should be made in the median if practical. This can be increased or reduced depending on risk and variability of tunneled materials.

2. Settlement Monitoring

The ground movements caused by trenchless pipe installation techniques can have a significant effect on adjacent services and road structures.

Surface settlement is mainly a result of loss of ground during tunneling and dewatering operations that cause subsidence. During microtunneling, loss of ground may be associated with soil squeezing, running, or flowing into the heading; losses due to the size of overcut; and steering adjustments. The actual magnitudes of these losses are largely dependent on the type and strength of the ground, groundwater conditions, size and depth of the pipe, equipment capabilities, and the skill of the contractor in operating and steering the machine. Sophisticated microtunneling equipment that has the capability to exert a stabilizing pressure at the tunnel face, equal to that of the insitu soil and groundwater pressures, will minimize loss of ground and surface settlement without the need for dewatering.

In general, the subsurface monitoring points should be installed at 5 ft and 10 ft above the crown of the proposed tunnel near the jacking shaft, above utilities, and on shoulders of roadways, to evaluate the Contractor's operations before proceeding under critical locations. Additional points at non-critical locations should be monitored to gain an early indication of Contractor workmanship.

Simple subsurface monitoring points (see below) that consist of a length of steel rebar installed inside a cased borehole that extends to the desired height above the tunnel crown are recommended.

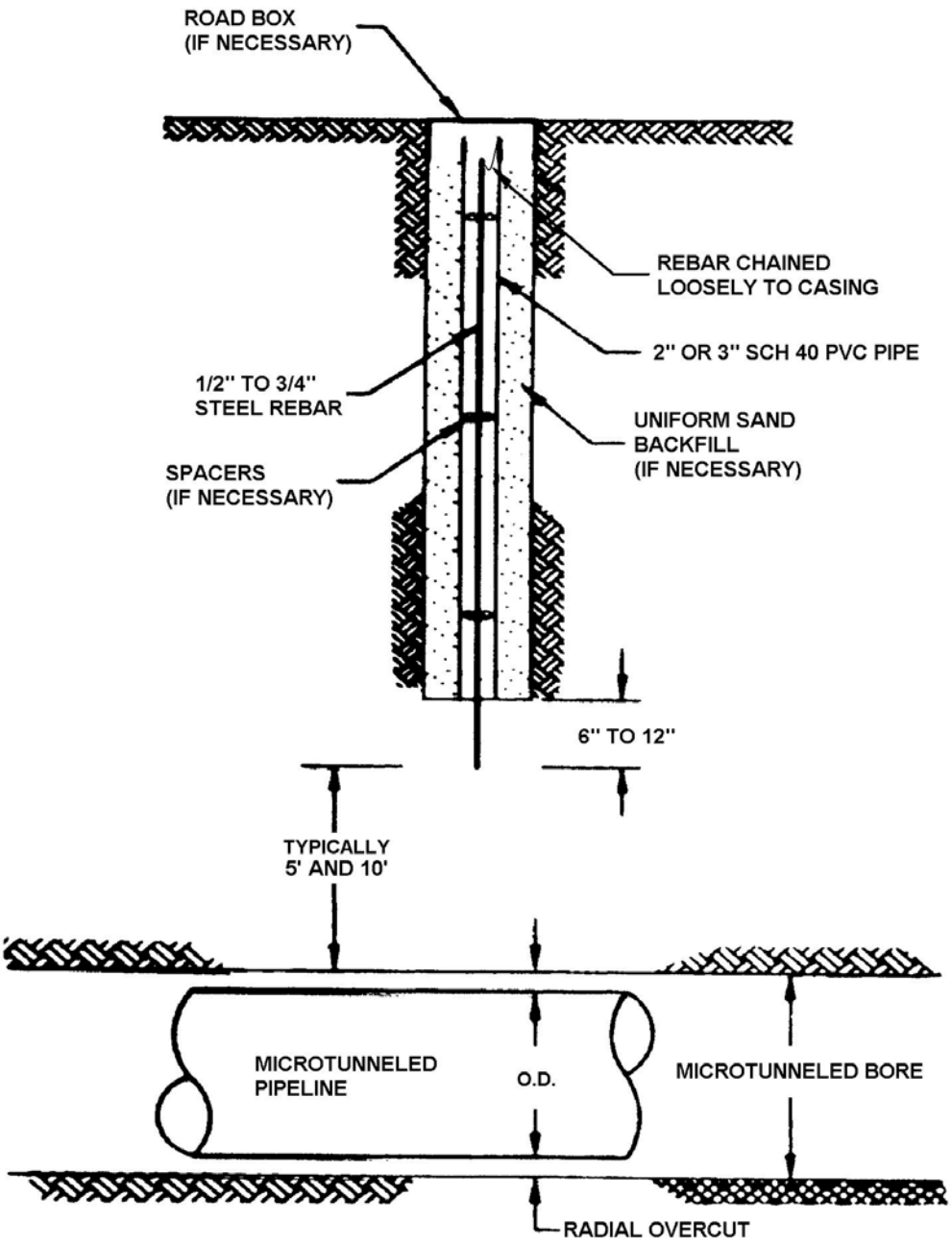

SETTLEMENT MONITORING POINT DETAIL

The materials needed are 1/2- to 3/4- inch diameter rebar and 2-inch diameter, Schedule 40, PVC pipe installed in a vertical borehole drilled to the desired depth of the settlement point. The casing should be covered with a cap to protect it from the weather and a road box can be used if the point is installed inside a traffic area. The casing is installed at 5 feet or 10 feet above the proposed tunnel crown, and the rebar is inserted into the casing and driven 6 inches to 12 inches below the bottom of the casing, into undisturbed soil. In this way, the response of the ground can be monitored very closely as the microtunneling or tunneling machine passes beneath the point. These simple settlement points have been shown to perform more reliably than surface points and more complicated and expensive

multiple-point borehole extensometers, which may tend to bridge over settlements until heavy loads pass over the affected areas.

Surface settlement monitoring points may be used to supplement the subsurface points. However, surface points only indicate gross settlements at the surface after subsurface ground loss has occurred. Due to the shear strength of soils, and the rigidity of pavement and other structures, voids created at depth may not appear at the ground surface for days, weeks, or even months after the tunnel has been completed. By monitoring ground movements much closer to the tunneling operations, at strategic locations before passing beneath the critical features, ground losses, if any, can be detected in time to fill voids quickly before surface facilities are affected, and more importantly, to alert the contractor to alter their procedures to prevent further ground loss.

Once installed, the monitoring points should be surveyed prior to tunneling to establish the baseline. Surveying should then proceed at least once a day, or every 50 feet of advancement, whichever is more frequent. In addition to daily monitoring by survey, the points should be checked at more frequent intervals by the onsite inspector using a tape measure as the tunneling machine or MTBM approaches and passes beneath the points.

SETTLE MONITORING POINTS	FREQUENCY	ACTION LEVEL*	MAXIMUM ALLOWED**
Surface	Hourly when heading is within 23 feet, otherwise daily	1/4 inch	1/2 inch
Surface (in traffic lanes)	Before and after tunneling	-	1/4 inch
Subsurface	Hourly when heading is within 23 feet, otherwise daily	1.5 inches	2.5 inches

* Corrective action taken (filling voids and alerting contractor to alter their procedures: Systematic settlements can be controlled by limiting the radial overcut the contractor is allowed to use, as well as filling the annulus with bentonite lubricant during tunneling)

** Mitigation such as grouting required

An independent Instrumentation Specialist should install and monitor the settlement monitoring points. The survey accuracy of the settlement monitoring points should be to 0.005 foot.

Calculations of expected systematic settlements can be made to determine whether changes in pipe depth and spacing of multiple pipes are needed, or whether changes to construction methods or ground improvement are necessary to prevent damage to existing surface facilities. Settlements may be evaluated using methods developed by Birger Schimdt and Peck (1969). This approach models systematic settlements as an inverted normal probability curve, or settlement trough, with maximum settlements occurring directly above the centerline of the tunnel, and with settlements decreasing with distance from the tunnel centerline. The approach actually has no theoretical basis in

soil mechanics, but has been adopted based on empirical correlations with observed settlement magnitudes and distributions. The equations and diagram for the calculations are shown in Figure 1.

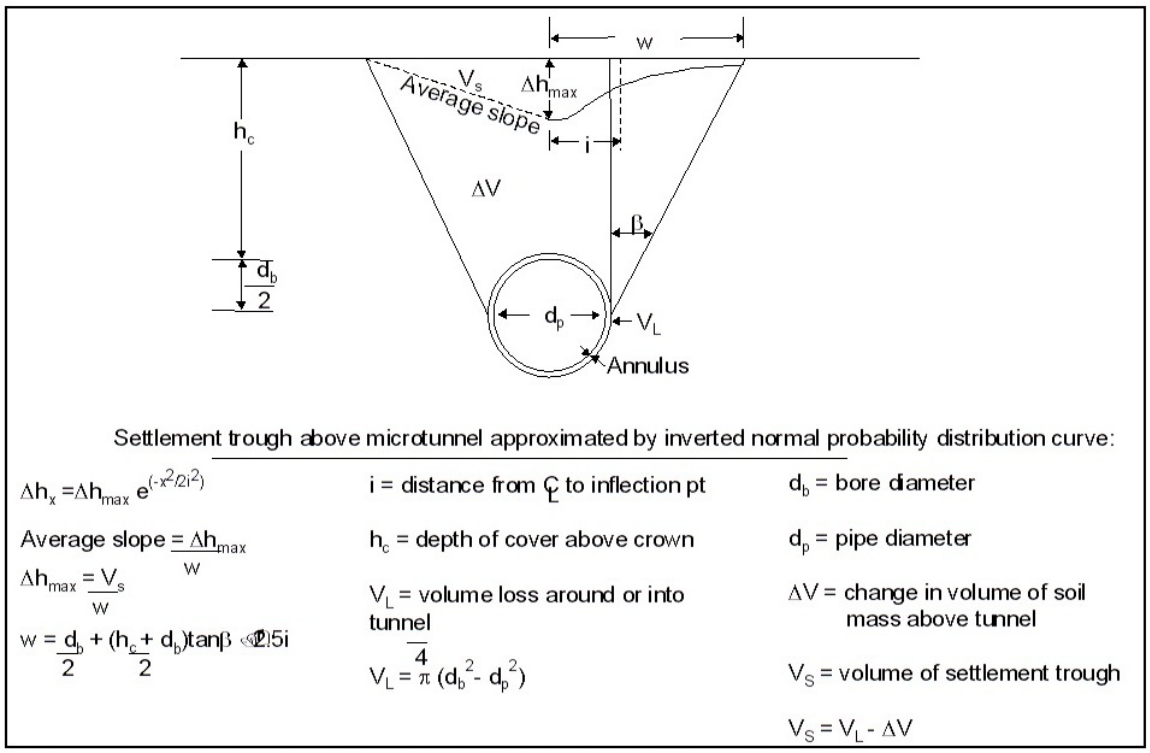

Figure 1 - Systematic Settlement Diagram (Modified from Cording & Hansmire, 1975)

3. Contractor Submittals

The following submittal requirements are presented below as an example and are specifically for microtunneling (see Index 9.1.2.2.2), however, similar information is required for other types of boring.

1) Manufacturers' data sheets and specifications describing in detail the microtunneling system to be used.
2) Detailed description of similar projects with references on which the proposed system had been successfully used by contractor/operator.
3) Description of method to remove and dispose of spoil.
4) Maximum anticipated jacking loads and supporting calculations.
5) Description of methods to control and dispose of ground water, spoil, temporary shoring, and other materials encountered in the maintenance and construction of pits and shafts.
6) Shaft dimensions, locations, surface construction, profile, depth, method of excavation, shoring, bracing, and thrust block design.
7) Pipe design data and specifications.
8) A description of the grade and alignment control system.
9) Intermediate jacking station locations and design.

10) Description of lubrication and/or grouting system.
11) Layout plans and description of operational sequence.
12) A detailed plan for monitoring ground surface movement (settlement or heave) due to microtunneling operation. The plan shall address the method and frequency of survey measurement. At minimum, the plan shall measure the ground movement of all structures, roadways, parking lots, and any other areas of concern within the calculated settlement trough of all microtunneling pipelines. A description of how settlements will be monitored and excessive settlements will be avoided and contingency plan should also be required to establish how the Contractor will mitigate any excessive settlements. A pre-construction survey should also be required in the Contract Documents and conducted by the Contractor, accompanied by the Engineer and Owner representatives, to document pre-construction conditions and protect against frivolous claims.
13) Contingency plans for approval for the following potential conditions: damage to pipeline structural integrity and repair; loss and return to line and grade; and loss of ground.
14) Procedures to meet all applicable OSHA requirements. These procedures shall be submitted for a record purpose only and will not be subject to approval by the Engineer. At a minimum, the Contractor shall provide the following:
    a. Protection against soil instability and ground water inflow.
    b. Safety for shaft access and exit, including ladders, stairs, walkways, and hoists.
    c. Protection against mechanical and hydraulic equipment operations, and for lifting and hoisting equipment and material.
    d. Ventilation and lighting.
    e. Monitoring for hazardous gases.
    f. Protection against flooding and means for emergency evacuation.
    g. Protection of shaft, including traffic barriers, accidental or unauthorized entry, and falling objects.
    h. Emergency protection equipment.
    i. Safety supervising responsibilities.
15) Annular space grouting plans if required by Contract Documents.

4. Contract Inspection

If in house expertise is not available, it may be necessary to have full time inspection performed by an underground construction-engineering firm specializing in the tunneling methods to be used. This covers other possible methods, which can be evaluated from the Contractor Submittals.

10.1 NEW PRODUCT APPROVAL PROCESS AND CONSTRUCTION-EVALUATED EXPERIMENTAL FEATURE PROGRAM

A significant number of the rehabilitation techniques that have been identified in this D.I.B. include new products, which have not yet been formally approved for use by Caltrans as such; specifications have not been developed or adopted. In 1995, the Department issued Deputy Directive DD-45, which established Caltrans policy on new product evaluations, defined a "new product," and instituted the position of New Product Coordinator appointed by the Engineering Services Division Chief. See Appendix B for a flow chart of the New Product Approval Process. New Product Evaluation Guidelines are available on-line at the following web site address:

http://www.dot.ca.gov/hq/esc/approved_products_list/NPGuidelines.html

The intent of the Construction-Evaluated (C-E) Experimental Feature Program is to field test the constructability and performance of promising new products, techniques and methods relating to highway facilities. A feature is considered experimental whenever it involves a "non-standard" item or process, or a "proprietary" (brand-name) product.

The C-E Program is not a method for approving a "non-standard" item or process, or a "proprietary" construction feature without proper evaluation and reporting (federal funds can be rescinded during the audit process if this is determined). However, the C-E Program may be a useful tool for using some of the non-approved products described in this D.I.B. and may help justify their ultimate approval for use within the new product process described above.

After a C-E project is approved, Caltrans typically evaluates how the feature is performing over a three to five year period. Under federal guidelines, Caltrans is generally limited to five projects exhibiting the same experimental feature.

The Resource Conservation Branch within Headquarters Division of Design is assigned the responsibility to act as Caltrans' liaison with FHWA and is their delegated authority for State authorized projects concerning all C-E projects. Although the C-E Project Program is a federal effort, it is important that experimental projects involving "state only" funds also be reported and monitored by the Resource Conservation Branch. To obtain approval for an experimental feature, a work plan should be submitted to Resource Conservation Branch no later than three (3) weeks prior to project advertisement. The Office of Highway Drainage Design within Headquarters Division of Design should also review all work plans involving drainage features. Furthermore, Office Engineer requires approval from the Office of Highway Drainage Design for all non-standard drainage features.

If a proprietary item is involved, approval must be obtained from the District Director or Deputy Director for Project Development. Copy of the approval letters should be sent to Resource Conservation Branch. See HDM Index 601.5(3) or Caltrans RTL Guide, for procedures for obtaining approval of proprietary items.

11.1 OTHER CONSIDERATIONS

11.1.1 Supporting Roadway and Traffic Loads

Our understanding of the final stages that lead to pipe or roadway prism collapse is still limited. Collapse/catastrophic failure normally originates where an initial, often minor, defect allows further deterioration to occur. Such defects may include:

- Cracking or deflection caused by excessive vertical load or bad bedding,
- Poor construction practice,
- Leaking joints or perforated invert,
- Damage caused by third parties;

Therefore it is not possible to predict when a pipe and/or the roadway prism will collapse.

However it is possible to judge whether a pipe has deteriorated sufficiently beyond its maintenance free service life (see HDM Topic 852) for collapse of the pipe and/or the roadway prism to be likely. As previously discussed (see Index 5.1.1.2.1) it should be noted Reinforced Concrete Pipe will fail but rarely "collapse".

Collapse is often triggered by some random event that may not be related to the cause of deterioration, perhaps a storm or an excavation nearby. Serious defects do not always lead quickly to collapse; in one study of pipe collapses there were many minor defects compared to the number of collapses that occurred.

<u>Soils</u>

The following general discussion on risk of ground loss and voids on cohesionless and cohesive soils should be considered in context with the assumption that an existing pipe (either rigid or flexible) has been placed in accordance with the Standard Plans and Standard Specifications as referenced in Indices 2.1.1.1.1 and 2.1.1.2.

When evaluating the potential for soil loss or soil arching, the engineer must understand that imported material placed as either structure backfill or roadway embankment may differ significantly from native soils. The following discussion on soil behavior must be viewed within the context of the various soil properties which may exist in close proximity to the culvert - i.e., perforations or other discontinuities which might allow for soil migration may lead to soil reactions that vary significantly from the reaction of native soils depending upon the specific nature of structure backfill material and any other soil material placed above the pipe.

Risk of ground loss from subsurface erosion during storm flows is generally low for most soil types except cohesionless soils (silts and silty fine sands). However, for pipes with defects larger than 3/8th inch, any soil type can be affected by severe ground loss. If infiltration occurs, even if there is no hydraulic surcharging, almost all silts and sands will be highly susceptible to ground loss through large defects. Only well graded sandy gravels whose coarser part includes gravel particles of at least medium size will not be susceptible to ground loss. For smaller defect sizes well-graded sandy fine gravels would also be resistant. Silts and sands without gravel in the grading are likely to migrate even through minor defects.

If hydraulic surcharge does occur all cohesionless soils apart from well-graded sandy, medium to coarse gravels are likely to be highly susceptible to migration through minor defects.

Cohesive Soils: If infiltration occurs, then clay (invisible particles less than 0.0002 inch in diameter) backfills with a plasticity index (PI - an indicator of the "clayeyness" of a soil determined by the difference between the liquid limit and plastic limit per AASTHO T-90-00) lower than about 15 are susceptible to migration through severe and large defects irrespective of whether hydraulic surcharging takes place. If the PI exceeds about 15 then it is probable that ground loss will only occur through severe defects; ground loss in these circumstances is sensitive to the head of ground water present.

Water flow through the voids in clay backfill tends to erode the soil and high heads of water due to high ground water tables accelerate this process. Clays containing coarse particles (such as fill and many glacial tills) are more prone to erosion because the soil particles tend to induce more turbulent conditions. Undisturbed clays normally have a low percentage of voids, which reduces the risk of erosion even if the plasticity is low. Thus pipes constructed by tunnelling in clay are unlikely to suffer ground loss from the virgin ground but the material around the pipe will behave like trench fill.

Voids above the water table can remain stable, through capillary suction in cohesionless soils and through tensile strength in cohesive soils. Below the water table large voids can only be stable in cohesive soils. If a large void exists in a cohesionless soil above the water table, any wetting of the surface caused by hydraulic surcharge will destroy the capillary suction and the void will tend to collapse. This will produce a zone of loosened soil next to the pipe, which may be lost through defects. The void may migrate upwards away from the pipe. In a cohesive soil above the water table surcharge can cause progressive softening of the soil around the void, which can lead to further loss of soil and to the void increasing in size. Below the water table a void in a cohesive material will act as a drainage path and softening and erosion can also lead to an increase in size. Voids in cohesive soils both above and below the water table can also collapse and migrate away from the pipe leaving a zone of loose soft ground. In the fieldwork undertaken by others, voids or evidence of them was found at a number of the collapse sites studied.

Voids that develop around culverts which have been in place for a long time are similar to voids around newly installed jacked pipes and tunnels; They may go undetected until the overlying ground collapses into the void loosening this material. This loosened material, which supports the roadway, may immediately cause a depression or sinkhole at the surface, or it may occur at a later date when the loosened material re-densifies with the help of water, traffic vibrations, earthquake shaking, etc. For jacked pipes and tunnels, probing is often done from within the pipes and grouting is performed to fill the voids. See Index 6.1.2. Probing for voids may be performed within any large diameter pipe.

Stresses and Deformation

Deteriorated pipes in granular soils often experienced low vertical stresses from the overburden due to the very efficient arching capability of the circular or near circular shape in frictional soil materials. However vertical stresses on pipes in clays are closer to

the full overburden stress and large deformations are required to mobilize the full soil strength to support the structure laterally.

Deformation of flexible pipes will occur when the soil at the sides no longer provides adequate support. This is clear evidence that deterioration is taking place. Final collapse is unlikely to occur until deformation exceeds 20% but typically only if other issues are present (sinkholes/depressions, etc. which show the fact that there has been loss of support) however, this final stage could occur quickly in response to an external influence.

With no other signs of distress, a flexible pipe deflected at 10% due to excessive load or improper compaction that is not perforated or is not experiencing soil loss, is not necessarily something to be alarmed about, and may need only monitoring. However, other pipes experiencing the same 10% deflection where;

a) The invert is fully perforated and, cohesionless soils are present, or,
b) Surface subsidence is present

are far more susceptible to collapse/catastrophic failure at 10% deflection due to some triggering mechanism. Therefore, depending on what conditions are present, our response to it may be to take immediate action or to monitor. It should be noted that the severity of impacts resulting from collapse would typically increase with pipe diameter.

Lining

When considering the viability of lining a deteriorated pipe with a flexible lining, calculations for ground and traffic loadings can be made but are very approximate due to the difficulty of assessing the equivalent stiffness of the old pipe, soil, and grout (if used) supporting the flexible lining. (See Index 6.1.1). For shallow pipes, traffic loading accounts for approximately half of the total loading. For pipes deeper than 6 feet, traffic loading accounts for approximately 25% of the total loading or less. Good ground support is present around most existing pipes. If the pipe to be renovated is in a reasonably sound condition and loadings on the pipe are not expected to increase (e.g. changes to highway profile grade), then the surrounding ground will normally provide enough support to carry existing ground and traffic loads and to ensure structural stability, particularly if soil voids are filled with grout as recommended.

Flexible pipes with excessive deflection (15% or more) will typically need to be replaced. If hydraulically possible (i.e., adequate cross sectional area can be maintained without a significant increase in headwater), heavily deflected flexible pipe may be lined with a rigid or semi-rigid material (typically RCP, WSP or RPMP) that is capable of supporting all ground and traffic loads.

11.1.2 Compaction Grouting

Compaction grouting is the injection of very stiff, low-slump, mortar-type Portland cement based grout (possibly with special admixtures including polymer resins) that is designed to stay in a homogeneous mass under relatively high pressure to displace and compact soils in place by acting as a radial hydraulic jack to strengthen loose or soft soils thus supporting roadway and traffic loads. Compaction grouting is used primarily on large pipelines applied through prepared grout holes in the pipe wall into the surrounding

soil or from grout tubes drilled through the fill. Compaction grouting may also be achieved with chemicals and foaming grout; however, chemical grouts should only be used in cohesionless soil for conditions requiring resistance to high fluid pressures. The material should not shrink, segregate or otherwise create additional problems. Portland cement based grout is adequate for most culvert grouting.

Because of the risk and potential of numerous problems associated with compaction grouting, the importance of early communication with the Geotechnical Design specialist from the Division of Engineering Services (DES) and coordination with headquarters cannot be over-emphasized.

See Appendix H for a compaction grouting case study on the Century Freeway in Los Angeles.

11.1.3 Future Rehabilitation

Regardless of the rehabilitation method chosen, at some point in the future, the pipe will need to either be rehabilitated again or replaced. Therefore, consideration should be given to the projected service life of the rehabilitation materials and their future repair or removal when developing any rehabilitation strategy.

12.1 APPENDIXES

Page

Appendix A – Butt Fusion Procedures for Solid Wall HDPE Slipliner 134

Appendix B – Flow Chart of the New Product Approval Process 140

Appendix C – Typical Resistivity Values and Corrosiveness of Soils 141

Appendix D – Crack Repair in Concrete Pipe Using a Maximum Strength, Non- Shrink, Portland Cement or Mortar (Refer to Index 5.1.1.2) 142

Appendix E – Sources of Information and Industry Contacts 143

Appendix F – CIPP Guidance for Resident Engineers 151

Appendix G – Case Studies 164

Appendix H – Design Examples 194

Appendix A – Butt Fusion Procedures for Solid Wall HDPE Slipliner

Source:

http://www.cpchem.com/performancepipe/literature/GeneralPurpose/PP750.pdf

Copied with permission from Chevron Phillips Chemical Company LP

CP Chem PERFORMANCE PIPE™

www.performancepipe.com

BUTT FUSION

SET-UP PARAMETERS

HEATING TOOL SURFACE TEMPERATURE — MINIMUM 400°F – MAXIMUM 450°F (204 – 232°C)

Heating tool surfaces must be up to temperature before you begin. Before you begin, all points on both heating tool surfaces where the heating tool surfaces will contact the pipe or fitting ends must be within the prescribed minimum and maximum temperatures and the maximum temperature difference between any two points on the heating tool fusion surfaces must not exceed 20°F (11°C) for equipment for pipe smaller than 18-in. (450 mm) diameter, or 35°F (19°C) for larger equipment. Heating tool surfaces must be clean.

- Interface pressure — **minimum 60 psi – maximum 90 psi (414 – 621 kPa; 4.14 – 6.21 bar)**

When the properly heated mating surfaces are brought together, the force required to make the joint is the force that is necessary to roll the fusion melt beads over to the pipe surface. This is a visual determination.

Interface pressure is used to calculate a fusion joining pressure value for hydraulic butt fusion machines or manual machines equipped with a torque wrench. The same interface pressure is used for all pipe sizes and all butt fusion machines. However, fusion joining pressure settings for the butt fusion machine are calculated for each pipe OD and DR.

For hydraulic machines, the interface pressure, the fusion surface area, the machine's carriage cylinder size and internal drag pressure, and if necessary, the pressure needed to overcome external drag resistance, are used to calculate hydraulic fusion joining pressure gauge settings. The equipment manufacturer's instructions are used to calculate this value.

Interface pressure and fusion machine hydraulic fusion joining pressure gauge settings are not the same!

Procedure

1. ***Secure.*** Clean the inside and outside of the component (pipe or fitting) ends by wiping with a clean, dry, lint-free cloth or paper towel. Remove all foreign matter. Align the components with the machine, place them in the clamps and then close the clamps. *Do not force pipes into alignment against open fusion machine clamps.* (When working with coiled pipe, if possible "S" the pipes on each side of the machine to compensate for coil curvature and make it easier to join.) Component ends should protrude past the clamps enough so that facing will be complete. Bring the ends together and check high-low alignment. Adjust alignment as necessary by tightening the high side down.
2. ***Face.*** Place the facing tool between the component ends, and face them to establish smooth, clean, parallel mating surfaces. Complete facing produces continuous circumferential shavings from both ends. Face until there is a minimal distance between the fixed and moveable clamps. Some machines have facing stops. If stops are present, face down to the stops. Remove the facing tool, and clear all shavings and pipe chips from the component ends. *Do not touch the component ends with your hands after facing.*
3. ***Align.*** Bring the component ends together, check alignment and check for slippage against fusion pressure. Look for complete contact all around both ends with no detectable gaps, and outside

diameters in high-low alignment. If necessary, adjust the high side by tightening the high side clamp. Do not loosen the low side clamp because components may slip during fusion. Re-face if high-low alignment is adjusted.

4. ***Melt.*** Verify that the heating tool is maintaining the correct temperature. Place the heating tool between the component ends, and move the ends against the heating tool. The initial contact should be under moderate pressure to ensure full contact. Hold contact pressure *very briefly* then release pressure without breaking contact. Pressure must be reduced to contact pressure at the first indication of melt around the pipe ends. Hold the ends against the heating tool ***without force***. Beads of melted polyethylene will form against the heating tool at the component ends. When the proper melt bead size is formed, quickly separate the ends, and remove the heating tool.

   - During heating, the melt bead will expand out flush to the heating tool surface, or may curl slightly away from the surface. If the melt bead curls significantly away from the heating tool surface, unacceptable pressure during heating may be indicated.

Table 1 Approximate Melt Bead Size

Pipe Size	*Approximate Melt Bead Size*
1-1/4" and smaller (40 mm and smaller)	1/32" – 1/16" (1 – 2 mm)
Above 1-1/4" through 3" (above 40 mm through 90 mm)	About 1/16" (2 mm)
Above 3" through 8" (above 90 mm through 225 mm)	1/8" – 3/16" (3 – 5 mm)
Above 8" through 12" (above 225 mm through 315 mm)	3/16" – 1/4" (5 – 6 mm)
Above 12" through 24" (above 315 mm through 630 mm)	1/4" – 7/16" (6 – 11 mm)
Above 24" through 36" (above 630 mm through 915 mm)	About 7/16"
Above 36" through 54" (above 915 mm through 1300 mm)	About 9/16"

5. ***Join.*** Immediately after heating tool removal, *QUICKLY* inspect the melted ends, which should be flat, smooth, and completely melted. If the melt surfaces are acceptable, immediately and in a continuous motion, bring the ends together and apply the correct joining force. *Do not slam. Apply enough joining force to roll both melt beads over to the pipe surface.*

   A concave melt surface is unacceptable; it indicates pressure during heating. (See Figure 2). Do not continue. Allow the component ends to cool and start over at Step 1.

Figure 2 Unacceptable Concave Melt Appearance

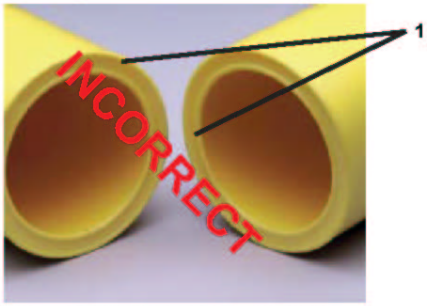

1. Unacceptable concave melt appearance.

- The correct joining force will form a double bead that is rolled over to the surface on both ends.

6. ***Hold.*** Hold joining force against the ends until the joint is cool. The joint is cool enough for *GENTLE* handling when the double bead is cool to the touch. Cool for about 30-90 seconds per inch of pipe diameter. *Do not try to shorten cooling time by applying water, wet cloths or the like.*
   - Avoid pulling, installation, pressure testing and rough handling for at least an additional 30 minutes.
   - Heavier wall thickness pipes require longer cooling times.

7. ***Inspect.*** On both sides, the double bead should be rolled over to the surface, and be uniformly rounded and consistent in size all around the joint. As illustrated in Figure 3, the double bead width should be 2 to 2-1/2 times its height above the surface, and the v-groove depth between the beads should not be more than half the bead height.

Figure 3 Butt Fusion Bead Proportions

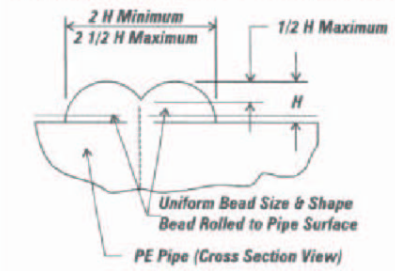

- When butt fusing to molded fittings, the fitting side bead may have an irregular appearance. This is acceptable provided the pipe side bead is correct.
- It is not necessary for the internal bead to roll over to the inside surface of the pipe.

Table 2 Butt Fusion Bead Troubleshooting Guide

Observed *Condition*	Possible Cause
Excessive double bead width	Overheating; Excessive joining force
Double bead v-groove too deep	Excessive joining force: Insufficient heating; Pressure during heating
Flat top on bead	Excessive joining force; Overheating
Non-uniform bead size around pipe	Misalignment; Defective heating tool; Worn equipment; Incomplete facing
One bead larger than the other	Misalignment; Component slipped in clamp; worn equipment; Defective heating tool; Incomplete facing
Beads too small	Insufficient heating; Insufficient joining force
Bead not rolled over to surface	Shallow v-groove - Insufficient heating & insufficient joining force; Deep v-groove - Insufficient heating & excessive joining force
Beads too large	Excessive heating time
Squareish outer bead edge	Pressure during heating
Rough, sandpaper-like, bubbly, or pockmarked melt bead surface	Hydrocarbon contamination

©2002 Chevron Phillips Chemical Company LP

CP Chem PERFORMANCE PIPE™

www.performancepipe.com

Butt Fusion Qualifying Procedure

1. Prepare a sample joint. Pipes on either side of the joint should be at least 6" (150 mm) or 15 times the wall thickness in length. Observe the joining process to determine that the correct procedure is being followed.
2. Visually inspect the sample joint and compare it to a sample or picture of an acceptable joint.
3. Allow the sample joint to cool completely – for no less than one hour.
4. Cut the sample joint lengthwise along the pipe into at least three straps that are at least 1" (25 mm) or 1.5 wall thicknesses wide. See Figure 1.
5. Visually inspect the cut surface at the joint and compare to a sample or picture of an acceptable joint. There should be no gaps, voids, misalignment, or unbonded areas.
6. Bend the straps until the ends of the strap touch.
7. If flaws are observed in the joint, compare appearance with pictures of unacceptable joints. Prepare a new sample joint using correct joining procedure, and repeat the qualifying procedure.

Acceptable Appearance

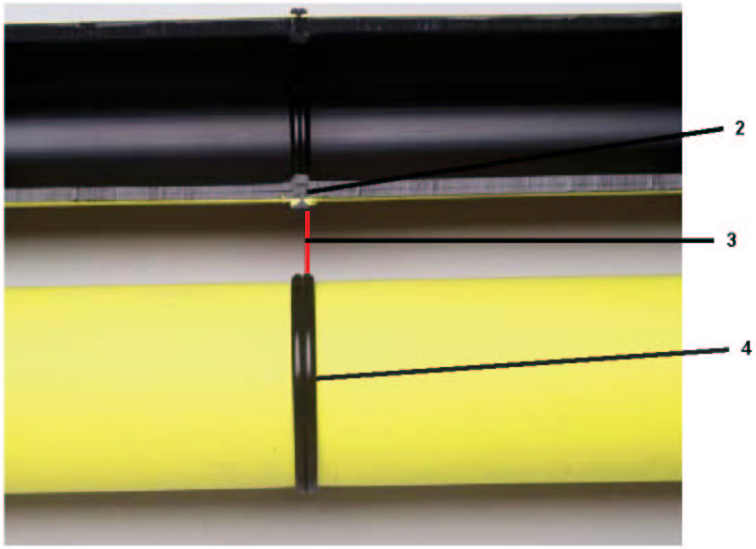

2. **Proper alignment - no gaps or voids**
3. **Proper melt, pressure and alignment**
4. **Proper double roll-back bead**

CP Chem PERFORMANCE PIPE™

www.performancepipe.com

ACCEPTABLE FUSIONS

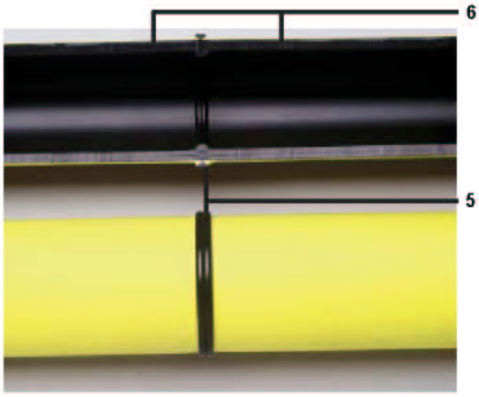

5. Proper double roll-back bead
6. Proper alignment

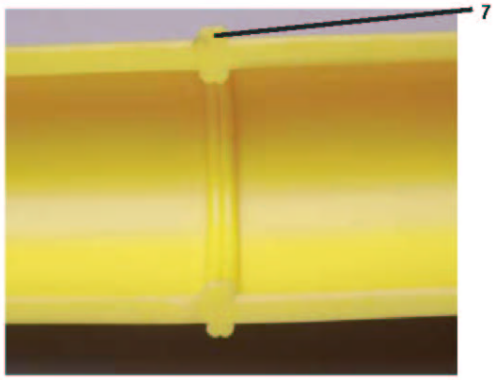

7. Proper double roll-back bead

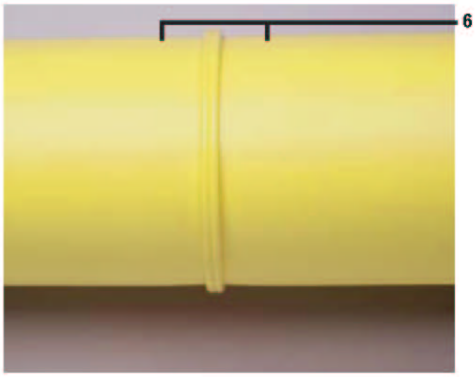

6. Proper alignment

8. No gaps or voids when bent

CP Chem PERFORMANCE PIPE™

www.performancepipe.com

UNACCEPTABLE FUSIONS

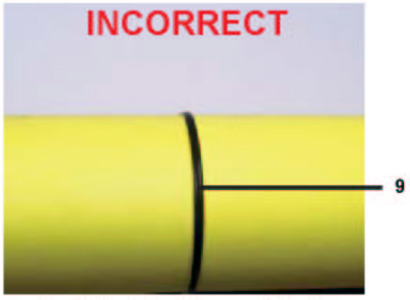

9. Insufficient heat time; melt bead too small

10. Excessive heat time or pressure applied during heating; melt bead too large

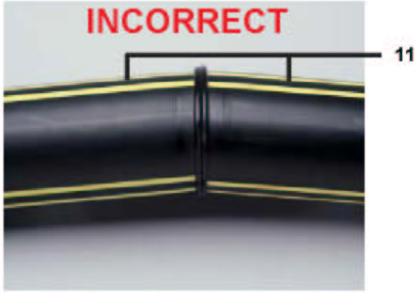

11. Pipe angled into fusion unit

12. Improper "High-Low" alignment

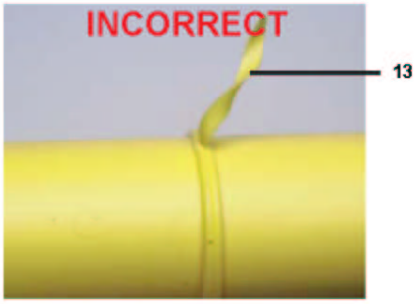

13. Incomplete face off or failure to remove faced off ribbons

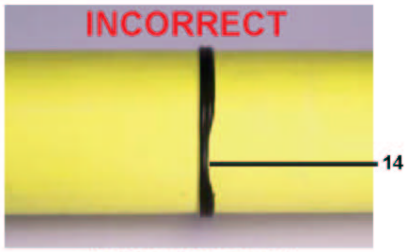

14. Incomplete face off

©2002 Chevron Phillips Chemical Company LP

Appendix B – Flow Chart of the New Product Approval Process

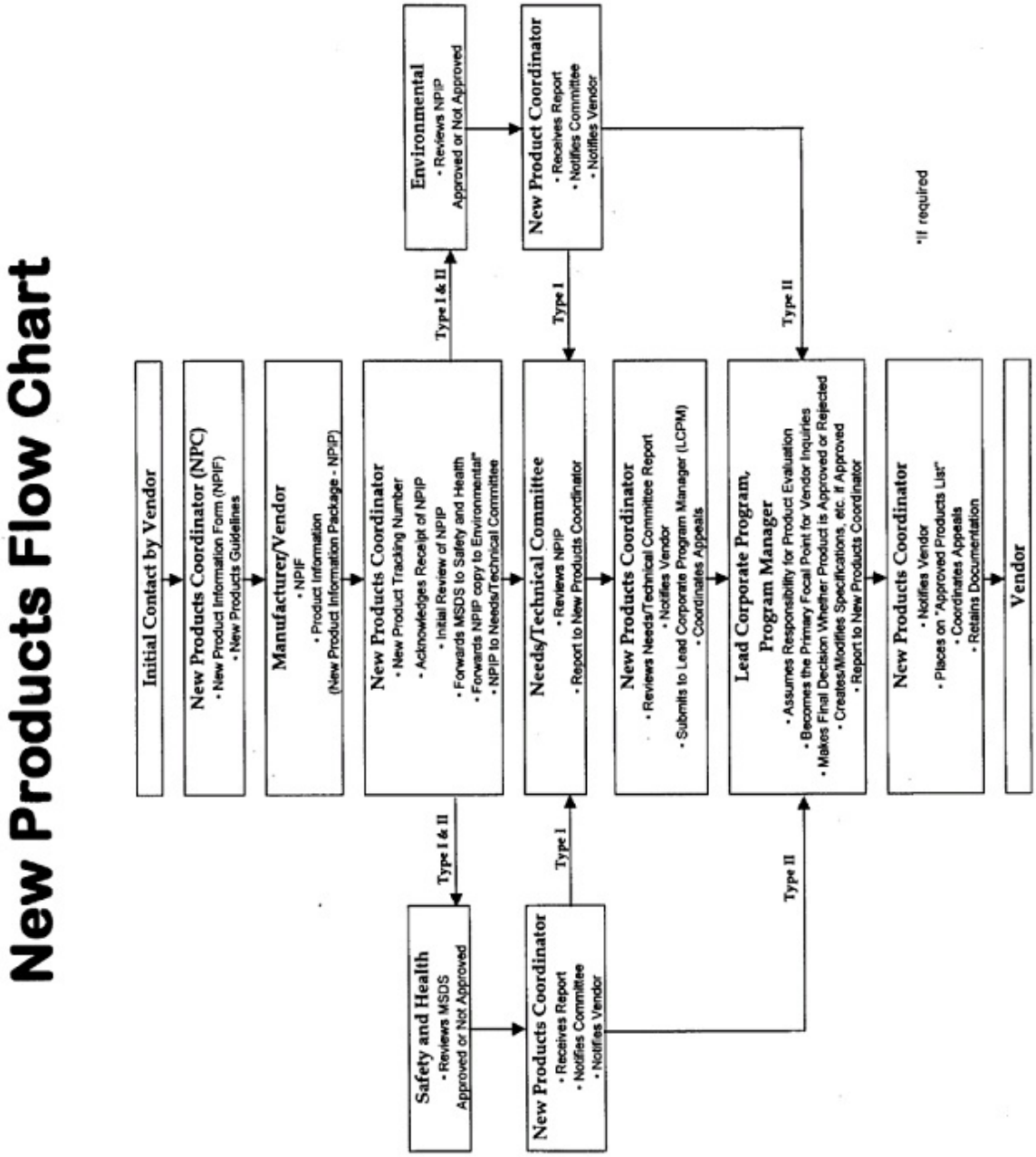

Appendix C – Typical Resistivity Values and Corrosiveness of Soils

See Index 5.2.5

Table 5-1 Typical Resistivity Values (6)

Soil		Water	
Classification	Ohm-cm	Source	Ohm-cm
Clay	750— 2,000	Seawater	25
Loam	3,000—10,000	Brackish	2,000
Gravel	10,000—30,000	Drinking water	4,000+
Sand	30,000—50,000	Surface water	5,000+
Rock	50,000—infinity*	Distilled water	infinity*

*theoretical

Table 5-2 Relationship of Soil Corrosion to Electrical Resistivity (7)

Soil Type	Degree of Corrosiveness	Electrical Resistivity ohm-cm
1	Very low	10,000—6,000
2	Low	6,000—4,500
3	Moderate	4,500—2,000
4	Severe	2,000—0

Table 5-3 Corrosiveness of Soils (7)

Soil Type	Description of Soil	Aeration	Drainage	Color	Water Table
I Lightly Corrosive	1. Sands or sandy loams 2. Light textured silt loams 3. Porous loams or clay loams thoroughly oxidized to great depths	Good	Good	Uniform color	Very low
II Moderately Corrosive	1. Sandy loams 2. Silt loams 3. Clay loams	Fair	Fair	Slight mottling	Low
III Badly Corrosive	1. Clay loams 2. Clays	Poor	Poor	Heavy texture Moderate mottling	2 feet to 3 feet below surface
IV Unusually Corrosive	1. Muck 2. Peat 3. Tidal marsh 4. Clays and organic soils	Very poor	Very Poor	Bluish-gray mottling	At surface; or extreme impermeability

Appendix D – Crack Repair in Concrete Pipe Using a Maximum Strength, Non- Shrink, Portland Cement or Mortar (Refer to Index 5.1.1.2)

Dimensions of "V" Grind shall be 0.25 inch wide minimum and approximately 0.5 inch deep. 1 inch deep Grinds may damage reinforcement. The Grind shall be cleaned of any grinding dust and surface thoroughly moistened before filling with non- shrink Portland cement or Mortar (e.g. Jet Plug™ by Jet Set California Inc, see Appendix E) to ensure a good bond.

The mortar mix should be mixed to a low-slump consistency with only enough water added to gain a consistency of heavy glazing putty. Allow repair to become firm to touch 6 to 10 minutes after installation. Then shave to grade with a trowel edge. Do not overwork

If the new patch is not under water, a curing agent shall be used to cover the new patch plus 1 inch on either side of the new patch immediately after patch is firm. It should be noted that when longitudinal cracks are found at the crown of the pipe, usually the invert of the pipe is also cracked.

Appendix E – Sources of Information and Industry Contacts

In addition, to the following web sites, see FHWA Culvert Repair Practices Manual Volume 2, Appendix D, for Sources of information and assistance. A comprehensive index of trenchless contractors and services is provided in the Directory published annually by the Trenchless Technology magazine. See http://www.trenchlessonline.com/ for buyer's guide link. Caltrans does not endorse any of the firms referenced below or listed in the Trenchless Technology magazine annual Directory and there may be many other firms not listed equally capable of performing specific services.

Internal Joint Seals:

CREAMER In-Weg® internal joint seals

http://www.jfcson.com/services/pipeline-rehabilitation

AMEX-10® /WEKO-SEAL® by Miller Pipeline Corp.

http://millerpipeline.com/markets_gasdistribution_weko.html

Victaulic Depend-O-Lok, Inc.

http://www.victaulic.com/en/search/?keyword=depend+o+lok

Internal Repair Sleeves

Link-Pipe

905-886-0335 ext 302

http://www.linkpipe.com

Chemical Grouting

Avanti International

822 Bay Star Blvd.

Webster, TX 77598

(281) 486-5600

(800) 877-2570 United States & Canada

www.AvantiGrout.com

Concrete Pipe Crack Repair

Jet Set California, Inc.

2144 Edison Avenue, San Leandro, CA 94577

(510) 632-7800

Cement-Mortar Lining

Spiniello's SpinCo.

http://www.spiniello.com/CML.php

Spirally Wound PVC companies:

Danby Pipe Renovation

http://www.danbyrehab.com/technicaldata.aspx

Sekisui SPR Americas, LLC

http://www.sekisui-spr.com/

Plastic Pipe Manufacturers:

ADS Pipe

http://www.ads-pipe.com/en/

KWH Pipe

http://www.kwhpipe.ca/

J-M Manufacturing

http://www.jmeagle.com/products/

Metal Pipe Manufacturers:

Contech

http://www.conteches.com/

Pacific Corrugated Pipe Company

http://www.pac-corr-pipe.com/

Welded Steel Pipeliners:

Precision Pipe & Products, Inc.

PO Box 102046

Birmingham, AL 35210

info@precisionpipe.com

General Pipe Rehabilitation:

Michels Pipe Services

http://michels.us/

California Contractors Involved in Underground Pipe Construction and Repair

Abbett Electric Corporation
Gregg Abbett
1850 Bryant Street
San Francisco, C A 94110
Tel 415-864-7500
Fax 415-864-3140

Advanced Boring Specialists of CA
Jon Litsey
628 B Airport Rd.
Rio Vista, CA 94571
Tel 707-374-4304
Fax 707-374-4314
advancedboring@thegrid.net
www.advancedboring.com

Advanced Boring Specialist of CA
1185 Second St., Suite G-1
Brentwood, CA 94513
925-634-1983
925-634-0947

Aguinaga Boring CO
Robert Aguinaga
PO Box 776
La Habra, CA 90631
Tel 562-697-7172
Fax 562-697-6868

Anata Directional Drilling
15716 Auberry Rd
Clovis, CA 93611-9640
Tel 209-323-5713
Tel 1-888-374-5548
Fax 209-323-1994
anatadrilling@contractor.net
http://www.anatadrilling.com

ARB, Inc.
Greg Dahl
PO Box 5166
Lakeforest, CA 92630
Tel 949-598-9242
Fax 949-454-7190
www.arbinc.com

Arrow Trenchless
Harry Barnes
7307 Roseville Road #6
Sacramento, CA 95842
Tel 916-349-0220
Fax 916-349-0550
trapper@pacbell.com

B & H Communications Inc.
Bob Baron
PO Box 92
Santa Margarita, CA 93453
Tel 805-466-1562
Fax 805-466-3954
bhcom@thegrid.net

California Boring
Kevin Reardon
2180 N. Batavia
Orange, CA 92865
Tel 714-283-9133
Fax 704-998-1979

Can-Am Construction Co.
Brad Adams
250 Fisher Avenue
Costa Mesa, CA 92626
Tel 714-966-8500
Fax 714-966-9300

Cherrington Corp.
7398 San Joaquin St.
Sacramento, CA 95802
Tel 916-759-3040
Fax 916-457-5902

Clayborn Contracting Group Inc.
Dave Gove
10101 Streeter Rd. #B
Auburn, CA 95602-8511
Tel 530-268-9512
Fax 530-268-9524
clayborn@gv.net

Copenhagen Utilities
Paul Wilcox
8989 Elder Creek Rd.
Sacramento, CA 95829-1032
Tel 916-685-2211
Fax 916-685-7321

Crutchfield Construction Co.
Harold Crutchfield
PO Box 5545
Stockton, CA 95205
Tel 209-463-5352
Fax 209-463-9107
dcrutchfield@emailmsn.com

Deats Construction
2975 N. Wilson Way
Stockton, CA 95205-2424
209-227-9632

Golden State Utility Co.
Ken Armstrong
PO Box 2968
Turlock, CA 95381-2968
Tel 209-634-4981
Fax 209-634-8319
usswayne@aol.com

J Bindner Directional Boring
Jerry Bindner
5532 W Pershing Ave
Visalia, CA 93291-7916
Tel 209-635-4806
Fax 209-633-2255

Kanaflex Corp
David Teper
22 Tavella Pl
Fort Hill Ranch, CA 92610
949-581-2089

Kvilhaug Well Drilling & Pump Co., Inc.
Dan Kvilhaug
1109 Landini Lane
Concord, CA 94520-3703
Tel 925-685-6613
Fax 925-685-6678

Manuel Bros, Inc.
Richard Reed
908 Taylorville Rd. Suite 104
Grass Valley , CA 95979
Tel 530-272-4213
Fax 530-272-4213
rcreed@attmail.com

Melmat Construction
Robert Lambing
PO Box 7052
Corona, CA 91718
909-734-7465

P & G Communications Inc.
Ryan Azevedo
PO Box 2545
Visalia, CA 93279
Tel 559-651-2200
Fax 559-651-1670

Renaissance Construction Inc.
John Patrick/James Patrick
3131 Industrial Ct.
Yuba City, CA 95993
Tel 530-673-0070
Fax 530-673-1137
rencorp@inreach.com

Riley Communications
Tom Riley
31630 Railroad Canyon Road #16
Canyon Lake, CA 92587
Tel 909-244-3350
Fax 909-244-4887
riley@ifci.net
http://www.ifci.net

Stephan Enterprises
Stephan Bagboudarian
17426 Tuscan Drive
Granada Hills, CA 91344
TEL 818-360-2411

The HDD Company, Inc.
PO Box 621028
Orangevale, CA 95662-1028
TEL 916-987-8599
FAX 916-987-9248
hddcoinc@aol.com
thehddco.htm

Underground Boring Systems
Mark Randle
1378 Birch Avenue
Clovis, CA 93613
Tel 209-322-0882
Fax 209-299-8532

Underground Construction Co Inc.
Harry Robinson
5145 Industrial Way
Bernicia, CA 94510
Tel 707-746-8800
Fax 707-746-1314

Utility Boring Inc.
Bill Malcolm
14364 Santa Ana Ave
Fontana, CA 92337
Tel 909-356-8888
Fax 909-356-1428
utilbor@aol.com

Utility Development Co.
Tracie Schmitz
PO Box 5746
Napa, CA 94581
Tel 707-252-8954
Fax 707-255-4078

UTILX
Doug Pressnell
Half Moon Bay, CA
Tel 650-726-7754
www.utilx.com

Walmsley Directional Boring
Stephan Walmsley
17890 Iona Ave
Lemoore, CA 93245
Tel 209-924-7122
Fax 209-924-4751

Walter C Smith Co., Inc.
Mike DeBenedetto
PO Box 1047
Clovis, CA 93613
Tel 209-299-9727
Fax 209-299-4723

Western Utilities, Inc.
Ken Rose
PO Box 507
Cedarville, CA 96104
Tel 916-279-6271
Fax 916-279-6381
lrose@hdo.net

Appendix F – CIPP Guidance for Resident Engineers

The following information should be included with the R.E. file when CIPP is included as a contract item:

Overview

Cured-in-place pipe (CIPP) lining is a resin-saturated, flexible fabric that is inverted (turned inside out by water or air pressure) or winched into the host pipe. Water or air/steam pressure is introduced to invert the tube into the host pipe (or inflate the already winched-in tube) and hold the tube tight against the existing pipe wall. Next a suitable heat source (water, steam or UV) is introduced which activates a catalyst, causing the resin to begin to harden.

With water inversion, the lining is inverted under water pressure from a hydrostatic head and cured by circulating hot water. With air inversion, the lining is inverted under air pressure and cured by introducing steam.

With winched (i.e., pulled in place) installations, the liner is inflated against the existing pipe wall either by air or water or by use of another internal liner (so-called "calibration hose") which is either inverted on site into the liner under air/steam or water pressure or pre-installed off site and then inflated with air or water. When a calibration hose is not used, Caltrans specification requires an impermeable inner membrane for resin control. Both liners carry resin. The pulled in place liner can be cured by circulating hot water, steam or by UV light.

After 3 to 6 hours of curing, the hardened resin gives the new pipe liner its strength.

After the resin sets, the downstream closed end is carefully cut and removed and a final video inspection is performed. A remote controlled cutting device may be used to open lateral connections after dimples are visually located with the camera or by referring to previously recorded information.

In general, the following steps are performed:

1) Install diversion (if needed)
2) Clean, inspect and prepare host pipe for lining (voids in backfill may need grouting, remove protrusions greater 0.5 inch, record exact locations of lateral pipes)
3) Prepare liner: The tube is vacuum impregnated with resin (on or off site depending on length and size of liner) and may be stored in ice for transportation to the site.
4) Install preliner (if inversion installation)
5) Install liner
6) Cure liner
7) Take test samples
8) Final inspection
9) Repair as needed
10) Remove diversion (if needed)

Basic Equipment and Materials

Liner

In the pre-lining state, the liner typically consists of reinforced 3 mm layers of non woven needled polyester fiber felt formed into a seamed tube of the required diameter with an impermeable plastic (polyethylene) inner membrane. The purpose of the plastic membrane is to keep water/steam separate from the resin impregnated felt during the cure.

For inversion installations the liner will be delivered to the job site plastic side out prior to inversion. However, for all Caltrans' projects, when the inversion installation method is selected by the contractor, an additional plastic preliner is required in the host pipe. For pulled in place installations, a sandwich-like combination of two liners will be delivered with plastic on the outside and inside. The pulled in place ASTM also allows an onsite inversion installation option for the inner liner ("calibration hose) for pulled in place installations.

The Caltrans specifications allow ASTM F 2019 "Conduits by the Pulled in Place Installation of Glass Reinforced Plastic (GRP) Cured-in-Place…" which is for a pulled in place fiberglass and felt composite tube that has higher physical property values and can be UV cured .

Preliners

For all **inversion** installations, a preliner will be needed. Polyester resin is most commonly used in CIPP, which won't stick to anything damp. Therefore an outer impermeable pre-liner acts as both a barrier and "mold" to span voids, open joints and damaged pipe etc. Once an industry 'standard'(but no longer), it is installed by first folding the ends 45 degrees, then it is attached to a cable or camera and pulled in flat. Once pulled through, the end is slit and attached to a fan. The fan inflates the preliner and inversion through the opposite open end is possible. See Griffolyn Type-55 FR by Reef Industries, Inc (Houston, TX) 800-231-6074 or 713-507-4251

http://www.reefindustries.com/griffolyn.php

For **pulled in place installations**, a reinforced plastic preliner is not used because the liner itself will have a polyethylene outer layer. However, Caltrans specification requires an impermeable inner layer as well which may be accomplished in the factory or on site via an inflatable bladder called a 'calibration hose'

Resin

Three types of resin are allowed and will cure readily when heated with air, steam or hot water; polyester, vinylester or epoxy. Epoxy is difficult to use for liners greater than 15" in diameter and is less commonly used than the other two. Recycled resins are excluded. See resin fingerprint analysis below.

The curable thermosetting resin is impregnated into the resin absorbent layers of the liner by a process referred to as the "**wet out**." This can occur on or off site at a plant, depending on the length and pipe diameter. Pipes over 400 feet long, 48 inches or larger in diameter, and tube thickness' of 24 mm or more will typically be wet out on site. The wet-out process generally involves injecting resin into resin absorbent layers through an

end or an opening formed in the outer impermeable film, drawing a vacuum and passing the impregnated liner through rollers. It is important during the impregnation process that air be excluded from the resin absorbent material to the maximum possible extent. This, in itself, gives a test as to the soundness of the liner since in a damaged bag, it would be impossible to draw and maintain a vacuum within the system.

Care should be taken to keep the resin material away from direct exposure to sunlight; ultraviolet rays tend to deteriorate the composition of the material. Prolonged exposure in the presence of heat can cause a thermosetting reaction. The saturated liner temperature should be kept at or below 70 degrees Fahrenheit during transportation and storage – which may be several weeks depending on the type of resin system. A refrigerated truck may be needed to maintain temperature level. After "wet out" the impregnated liner is laid into a truck for transport to the job site. This is done by folding the liner in layers stacked one above the other (see picture below). In between each layer of liner is a layer of ice to retard the resin from curing. This situation creates a great deal of weight bearing down on the lower layers of liner. The weight on top of the lower layers can cause resin to be squeezed out, leading to a thin wall in those layers of liner.

Once a catalyst (commonly used systems consist of a low temperature and high temperature peroxide) is added to the resin, the resin is considered to be in the promoted or reactive state.

Inversion Installations

See "overview" above.

For water cures, typically an inversion platform, reinforced polyester tube, and 90 degree steel elbow are the three pieces of equipment unique to inversion installations if water is used for inversion and cure.

The scaffold height for the platform varies with the depth below grade and the diameter of the host pipe being lined as well as the thickness of the liner. The larger the diameter, the smaller the head needed for inversion.

For air/steam inversions and cure, an air compressor and a steam source of sufficient capacity equipped with monitoring and control equipment for adjustment of air/steam temperature and pressure in accordance with the manufacturer's instructions submitted. The liner is first inverted with air pressure and then cured using steam.

Thermocouples

Thermocouples are temperature-sensing devices placed between the liner and the preliner to read the temperature during the cure and post-cure periods; these give accurate indications of the cure status of the material.

UV Cure Installations

All UV cures are pulled-in-place. End "gates" are placed at each end of the culvert to inflate the liner (approximately 8 psi).

A light train is then inserted through one end and pressure is restored. A light train camera is activated and the train is manually pulled through the liner in order to visually inspect it for any potential problems.

After the liner inspection is complete, the light train is once again pulled through the liner, this time via computer. The computer controls the speed, temperature and pressure of the process which are all carefully monitored via laptop computer during the curing of the pipe liner.

When the CIPP process is complete, the ends of the liner are trimmed, a cutter is inserted and precision cuts are made at each lateral to restore service to the main. Typical UV light train systems cure at speeds in the 4 to 8 foot per minute range. For example, a length of 300 feet of 8 inch UV CIPP liner can be cured in 50 minutes.

Field sampling and testing procedures must comply with ASTM F 2019, Section 7: Recommended Inspection Practices.

Potential Problems

Pinholes or tears in the polyethylene coating

One of the first and ongoing procedures throughout the entire installation is the visual inspection of the bag for any obvious flaws such as pinholes or tears in the polyethylene coating. Occasionally defects may have been caused in manufacturing the bag, but more often occur during job site handling or shipping. If there is a defect in the liner, it is much better to detect it before the liner is installed into the host pipe than to realize the recirculating water (or steam) is leaking.

After the liner is unpacked from its shipping container, a vacuum pump is attached to the bag to evacuate the entrapped air from the felt liner material. This, in itself gives a test as to the soundness of the liner since in a damaged bag it would be impossible to draw and maintain a vacuum. Typically, this will occur offsite at a plant. See "resin" above.

Example of Liner Tear During Installation and Subsequent Repairs

Heat sink of ground

Monitoring of the thermocouple temperature shows the actual increase in temperature of the liner bag. The heat sink ability of the ground around a pipe can greatly vary with groundwater, backfill and host pipe material. Therefore, the temperature of recirculating water (or steam) verses liner bag outer surface temperature may vary. For this reason, the temperature of the circulating water should never be used as the only indication of the extent to which the process has proceeded.

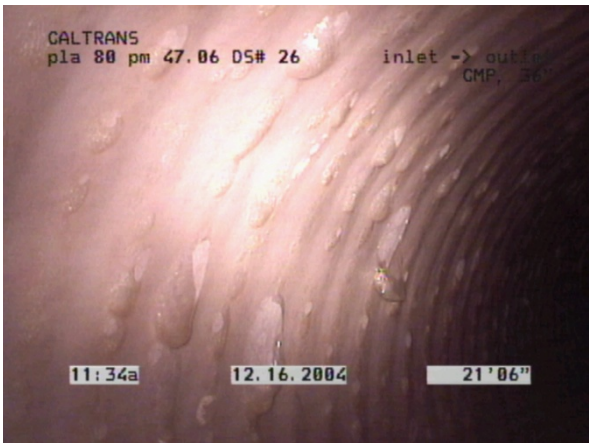

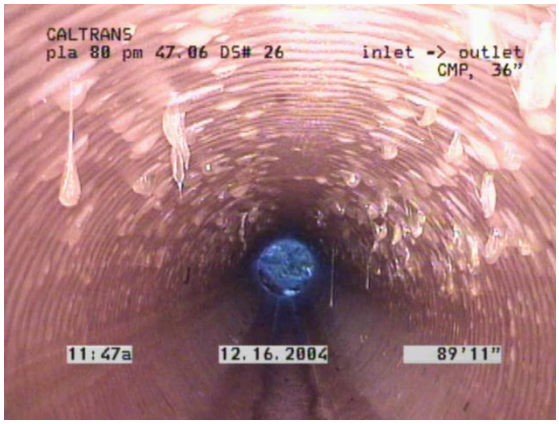

Examples of Delamination, Bubbling and Rippling in Lined CMP Host Pipes

Styrene boils

If the amount of heat given off (i.e., the temperature of the exotherm) is not controlled properly the styrene in the resin may boil, forming microscopic air bubbles in the wall of the liner. The formation of these bubbles can reduce the physical properties of the finished liner by as much as 75%.

Fillers in resin

The Caltrans specification states the resin shall not contain fillers, except those required for viscosity control, fire retardance, air release or extension of pot life.

Poor dispersion of fillers during mixing into the resin can result in areas of high filler concentration in sections of the liner wall

High levels of fillers will make the liner more brittle and more susceptible to damage by impact.

Banding liner (inversion installations)

The proper banding to the inversion shoe (reinforced polyester tube – see "inversion installations" and photo) is critical. If the bag comes loose from the shoe, or a leak develops at the connection, the inversion may have to be stopped because curing could not proceed. If the problem cannot be corrected quickly, the entire insertion might have to be abandoned; this most likely would result in the loss of the liner bag, resin, and all preparatory work.

Termination points

If the CIPP liner does not fit tightly against the host pipe at its termination point(s), the space between the liner and host pipe shall be filled with a quick-set epoxy mortar or high viscosity epoxy such as Neopoxy NPR-3501 or equivalent, or a hydrophilic vulcanized expansive rubber strip such as Swellseal 8 by De Neef Construction Chemicals or equivalent.

Neopoxy NPR-3501:

Phone: 510-782-1290 Web address: http://www.neopoxy.com/

De Neef Construction Chemicals:

Phone: 936-372-9185 Web address: http://www.deneef.com/

Cool down time

The Caltrans specification states: “Curing temperatures and schedule shall comply with submitted data and shall include an adequate "cool down" in accordance with these special provisions.”

According to one source, the minimum cool down time should be no less than the boiler start time to end of the high temperature cure.

Safety

Special consideration should be given to safety factors during installation and curing. Care to protect workers, spectators, and equipment from hot water or steam should be observed by the use of rubber wear and protective shrouds. Any time workers enter the drainage structures and pipes; all confined space procedures must be strictly followed. Strong volatile styrene fumes are created by this process to which prolonged exposure must be avoided. Also, because most polyester resins are water soluble, the uncured resin may pollute ground water. For this reason, all curing water must be captured.

Testing

It should be recognized the Caltrans specification was developed as a “performance-based specification” of the finished product. One necessary aspect in successful implementation of the performance specification is testing. Attention is directed to the Submittals and Quality Control sections of the specification for in-house pre-testing, quality assurance requirements, and independent laboratory testing, as well as a field thickness test.

For testing physical properties of thermosetting cures, aluminum plate clamped molds containing flat plate samples are placed inside the installed liner during the curing period of the CIPP tube. Each flat plate sample is sealed in a heavy-duty plastic envelope inside the molds. Enclosing the sample in plastic keeps the resin and water separated during cure (similar to the inner plastic coating of the liner). A sample transmittal form is included with this document.

For UV cures, a minimum of 3 cured samples are required which must comply with sampling and testing procedures under ASTM F 2019, Section 7: Recommended Inspection Practices.

For testing liner thickness over corrugated metal host pipes, it is important to measure the thickness over a corrugation crest in the pipe invert which is usually the place with the least resin and experiences the most wear. Note there may be a minimum thickness provided by the designer in the specifications. The thickness calculated by the contractor and provided in the submittals must not be less than the minimum thickness (if specified). A sample form is included with this document.

To verify the type of resin used, a liquid resin sample (114 g min. of unreacted resin) shall be shipped to the Transportation Laboratory for infrared fingerprint analysis as part of the pre-job submittals.

Also, for the first test performed, and for at least one, randomly selected by the Engineer, of every 5 subsequent tests, the Contractor shall concurrently prepare an additional resin sample for quality assurance infrared fingerprint analysis, which shall be shipped to the Transportation Laboratory in Sacramento, 5900 Folsom Blvd., Sacramento, CA 95819 (Attention: Chemical Laboratory).

Thickness sampling and repair

If Contractor chooses the alternative method allowed in the specifications for thickness sampling - using a 10 feet long like diameter pipe extension butted up against the host pipe (in place of coring the host pipe 10 feet from the ends), it is important that the temporary pipe extension is made of the same combination of materials (i.e., CMP and insulating preliner). This is the only way to replicate what is happening in the host pipe during the lining process regarding temperature, resin flow, exotherm heat dissipation, and thickness over corrugation crests. The sample should be taken within 1 ft or so of the temporary joint where like pipe/insulating material extension is butted up against the host pipe. This ensures the specified sample location of approximately 10 ft. from the termination point of the liner, avoiding any thinning.

Figure 1 on the next page depicts core sampling and repair to host pipe.

FIGURE 1: C.I.P.P. LINER CORE SAMPLING

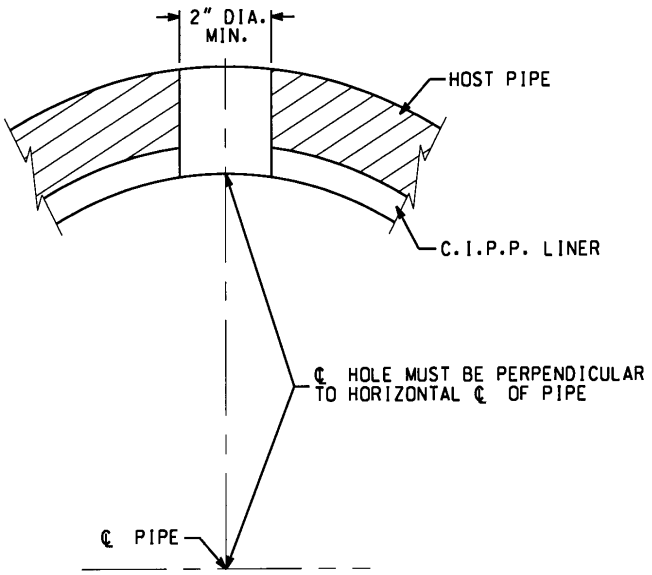

CORE

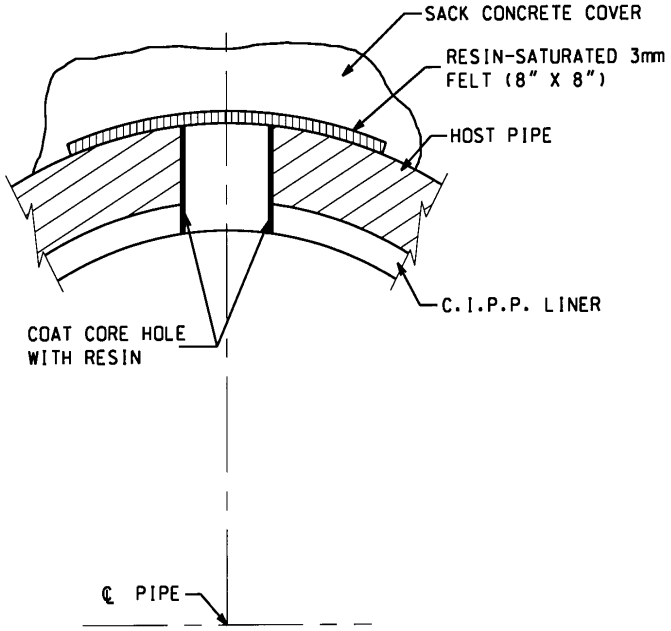

CORE HOLE REPAIR

C.I.P.P. LINER

FIELD THICKNESS TEST DOCUMENTATION

Project No. _____

Project Title _____

Segment No. _____

on Map No. _____

---

*Sample No. _____ *Sample No. _____

Location: _____ _____

Sample Date: _____ _____

Sample tested by: _____

Measurements: _____ mm _____ mm

_____ mm _____ mm

_____ mm _____ mm

Sub-Total = _____(A)_____ (B)

Average Thickness (A+B/6) = ___ + ___/6 =_____ mm

Required Thickness (Bid Form) = _____ mm

Results (Pass/Fail) _____

Contractor Representative Present _____

Engineer Representative Present _____

Date _____ Time _____

*Sample Number is Segment Number with a -1 or -2 added for Sample Designators.

TRANSMITTAL FORM

C.I.P.P. LINER SAMPLES DOCUMENTATION

Project No. _____

Project Title _____

Sequential Submittal No. _____

Segment No. _____ on Map No. _____

Location: _____

Requirements: Modulus _____ PSI (250,000 PSI Minimum)

Flexural Strength _____ PSI (4,500 PSI Minimum)

Thickness (this segment, minimum) _____

Sample No. _____

Sample by _____

Sample on _____

Total no. Samples _____

Test for:

Modulus (ASTM D-79)

Flexural Strength (ASTM D-790)

Thickness

I.R. Fingerprint

Other: _____

Independent Lab _____ Submitted to: _____

Phone: _____

_____ Fax: _____

_____

Translab Contact (Random Q/A samples only):

_____ Phone: _____

Fax: _____

Caltrans Intranet website to access ASTM's:

http://projdel.dot.ca.gov/des/business.asp

Then click on the following IHS Specs and Standards search link:

http://www.ihserc.com/specs3/controller/controller;jsessionid=www.ihserc.com-3f75%3A4362aa76%3A5b6f4b5619f5928e?event=NAV_CONTROLLER&wl=1&n=1005&PROD=SPECS3&sess=49962212

Appendix G – Case Studies

Example 1: Ed-50-PM 14.0 (4C9104) Culvert Repair Summer 2003

Approximate Pipe Location Shown in Blue

In June 2003, a sinkhole was identified by maintenance adjacent to the number one lane of the westbound traveled way on Highway 50 in El Dorado County at Post Mile 14.0 just east of El Dorado Road Overcrossing (Br. No 25-76) in the vicinity of a 96 inch Structural Steel Plate Pipe (SSPP). This section of Highway 50 was constructed 35 years prior. The 820 foot long SSPP was constructed as a cross drain for Indian Creek which was realigned from its original location to the east and uphill. A 230 foot long 36-inch diameter bitumen coated CMP connects into the SSPP at the center in the median and a 56 foot long 18-inch diameter CMP connects into the SSPP approximately 150 feet from the outlet. Both pipes collect drainage from the north side of the freeway and outlet into the SSPP.

Measuring the Sinkhole

INITIAL INVESTIGATION AND PROBLEM IDENTIFICATION

The District Hydraulics and Maintenance Branches and Headquarters Offices of Roadway Drainage Design and Maintenance made initial investigations. Subsequently a team was assembled consisting of representatives from these units and also from Geotechnical Design, the Corrosion Technology Unit and Underground Structures from within the Division of Engineering Services (DES).

In the interim, District Maintenance attempted to backfill the initial large void/sinkhole at the surface with approximately 9 cubic yards of concrete slurry after an earlier attempt to backfill the void with aggregate base.

From the initial site investigations and problem identification the following factors were identified:

- Corrosion of the lower 180 degrees throughout the pipe
- Deformation of up to 1 foot squeezing inward in the x-axis
- Invert perforations throughout pipe with significant loss of invert in the vicinity of the sinkhole
- Abrasion negligible – most nuts showing little sign of wear
- Rock hammer blows to the side of the culvert made hollow sound at multiple locations in lower portions of the pipe indicating potential for voids or loose soil throughout much of the length
- The 3 foot diameter bitumen coated pipe was perforated in the invert

DETAILED INVESTIGATION

After initial investigations were made it was determined that more detailed investigations would be needed to provide the following information:

- Soil and Water samples to obtain pH and Minimum Resistivity
- Thickness measurements of metal
- Survey of dimensions within pipe
- Detailed hydraulic investigation to determine hydraulic parameters of existing pipe and potential rehabilitation alternatives
- Geotechnical investigation using Ground Penetrating Radar (GPR) and Cone Penetrometer (CPT) to determine location and extent of the voids

Using the original metal gage (thickness) as input for Culvert 4, the corrosion samples from the soil and water indicated that the site was corrosive (soil: pH=5.6-6.3, Minimum Resistivity =10,000 ohm-cm, water: pH=7.5-7.8, Minimum Resistivity = 3400-3500 ohm-cm, Sulfate content = 12 mg/kg ,Chloride content = 12 mg/kg) but as designed, the pipe should have met the 50-year design service life based on our existing predictive method. From Figure 854.3C in the HDM using a pH of 5.6 and minimum resistivity of 10,000 ohm-cm for the soil, a service life of 22 years for an 18-gage is obtained which is equivalent to 48 years for the 12 gage portion and 62 years for the 10 gage portion.

However, groundwater is present at the site year round and the Indian Creek realignment has resulted in the backside of the pipe often being in a state of saturation from the invert

up to mid point (springline) where the groundwater could leach in. Due to the condition of the pipe, it was assumed that higher corrosion levels than the test results indicated must be present.

Thickness measurements using an ultrasonic thickness gage indicated that the upper 180 degrees (above the springline) showed minimal to no loss, while the lower 180 degrees indicated varying conditions of rust stain, pitting, perforation and total loss (in the invert). There was total loss of the invert starting at 350 feet and extending to about 500 feet of the 820 foot long pipe and perforations for the entire invert. See pictures and table of results the on following pages.

Taking Thickness Measurements. Note Evidence of Leaking Horizontal Seam at Springline

Total Loss of Invert and Existing Nuts Showing Minimal Wear

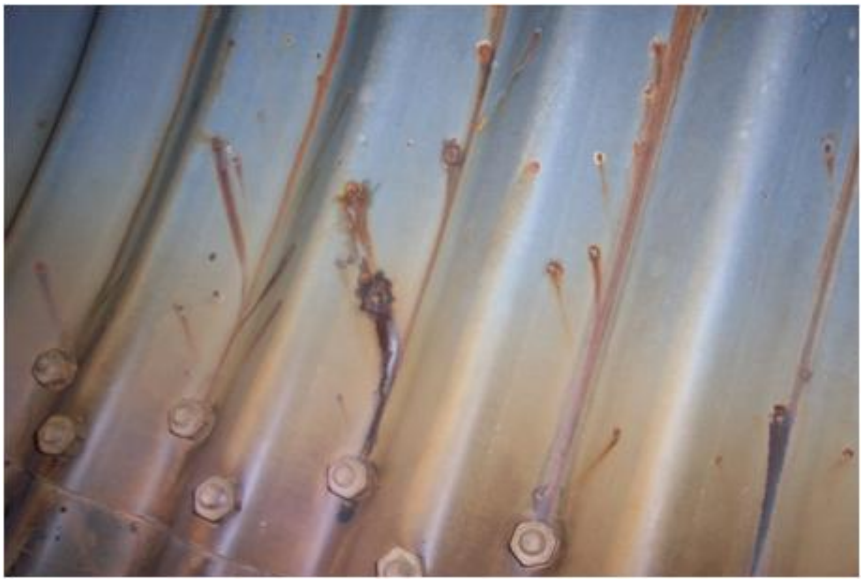

Typical Local Corrosion Cells. Note that the corrosion is coming in from the backside, thus the pipe is in worse condition than it appears. See picture of void found from probing during construction.

36 Inch Bitumen Coated CMP Tie-In. Note rust stain below from perforated invert. Perforations in invert to 36 inch CMP allowed water to leak behind 96 inch culvert

Culvert Thickness Readings (in)					
Position	**Clock Position**				
(ft)	**3:00**	**5:00**	**7:00**	**9:00**	**12:00**
10	0.112	0.109	0.109	0.115	0.113
50	0.108	0.110	0.105	0.118	0.115
100	0.113	0.111	0.110	0.108	0.110
150	0.110	0.106	0.107	0.108	0.114
200	0.103	0.104	0.106	0.110	0.112
250	0.111	0.101	0.105	0.112	0.112
300	0.112	0.101	0.106	0.112	0.113
350	0.114	0.089	0.115	0.113	0.108
400	0.112	0.093	0.107	0.110	0.109
450	0.117	0.069	0.090	0.107	0.109
500	0.114	0.054	0.058	0.118	0.148
550	0.112	0.083	0.095	0.109	0.112
600	0.110	0.085	0.113	0.106	0.112
650	0.108	0.096	0.093	0.108	0.109
700	0.136	0.132	0.122	0.131	0.144
750	0.145	0.140	0.128	0.141	0.135

Culvert Ga. 12 = 0.109 inches from 0-660 ft*

Culvert Ga. 10 = 0.138 inches from 660-840 ft*

Position is measured from inlet side. Mouth of inlet side is 0 ft. Clock positions were assigned assuming standing at the inlet, and facing the outlet.

* Culvert thickness change due to fill height.

The CPT and GPR test results did not indicate the presence of any additional major voids other than the sinkhole. However, below the springline and beyond the limits the freeway pavement and median, further information was still needed.

Using the measurements of the original pipe to size a circular liner, hydraulic investigations indicated that the resulting increase in headwater from the reduced cross section would be unacceptable to adjacent property owners. The alternatives selected for consideration were all first analyzed to be hydraulically viable.

ALTERNATIVE SELECTION AND DESIGN

The following alternatives were studied and discussed in a meeting consisting of members from the previously referenced units and Construction:

1) Total replacement with a combination of jacking under deeper fills and trenching at the shallow section of the pipe under the freeway
2) A combination of full-lining and jacking a parallel pipe to supplement the reduced cross section
3) Full-lining using a custom sized Fiber Reinforced Segmental liner system (Channel Line)
4) Paving invert with concrete

As an emergency project, there were significant scheduling constraints for both the plans preparation and construction window, i.e., number of working days available. Alternative number 4 above was deemed to be the most viable for completion within the narrow time frame and preliminary plans had already been initiated by Maintenance.

The initial invert-paving plan proposed by Maintenance was further developed to pave the entire lower 180 degrees of the pipe and a thrust connection was incorporated in the design to transfer thrust from the upper half of the pipe to the new concrete lining. The thrust transfer design comprised of tack welding L3.5” x 3.5” x 5/16” Bearing Angles to each side of the culvert longitudinally with each Bearing Angle connected to transverse L2” x 2” x 1/8” x 7.75" long Attachment Angles welded with 1/16 fillet welds at every corrugation (see detail on next page).

As outlined above, the GPR and CPT testing was incomplete relative to the voids below the springline directly behind the pipe and outside the limits of testing (i.e., ramps). Therefore, Geotechnical Design recommended exploratory probing for voids at 2, 4, 8 and 10 o ‘clock positions every 6 feet along culvert using a ½ inch (No. 4), 4 foot long rebar. Any voids found, were to be filled by low-pressure contact grouting with a maximum injection pressure not to exceed 5psi measured at the nozzle. The exploratory work and subsequent contact grouting was included into the contract and paid for by Extra Work (see detail on next page).

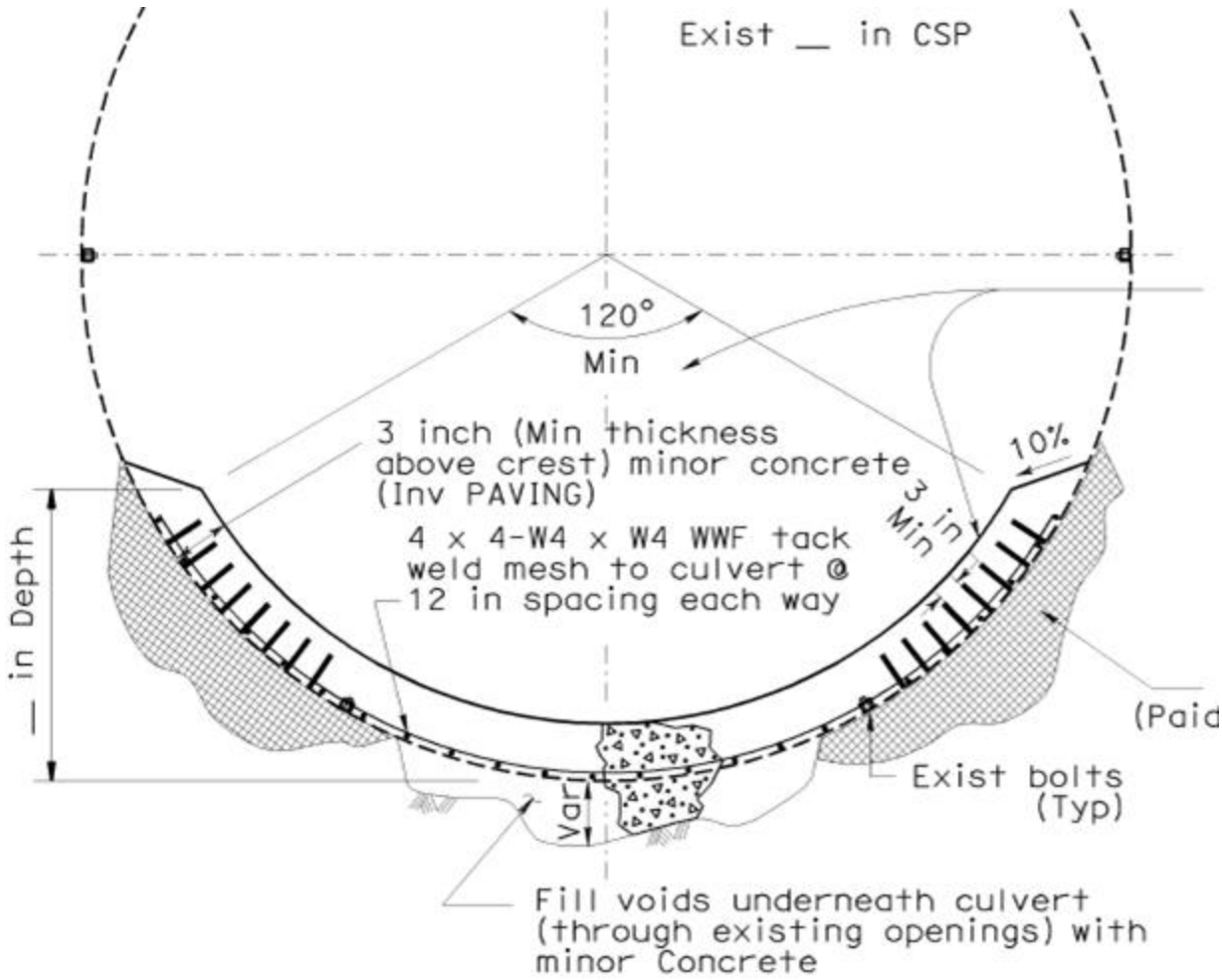

INVERT PAVING DETAIL

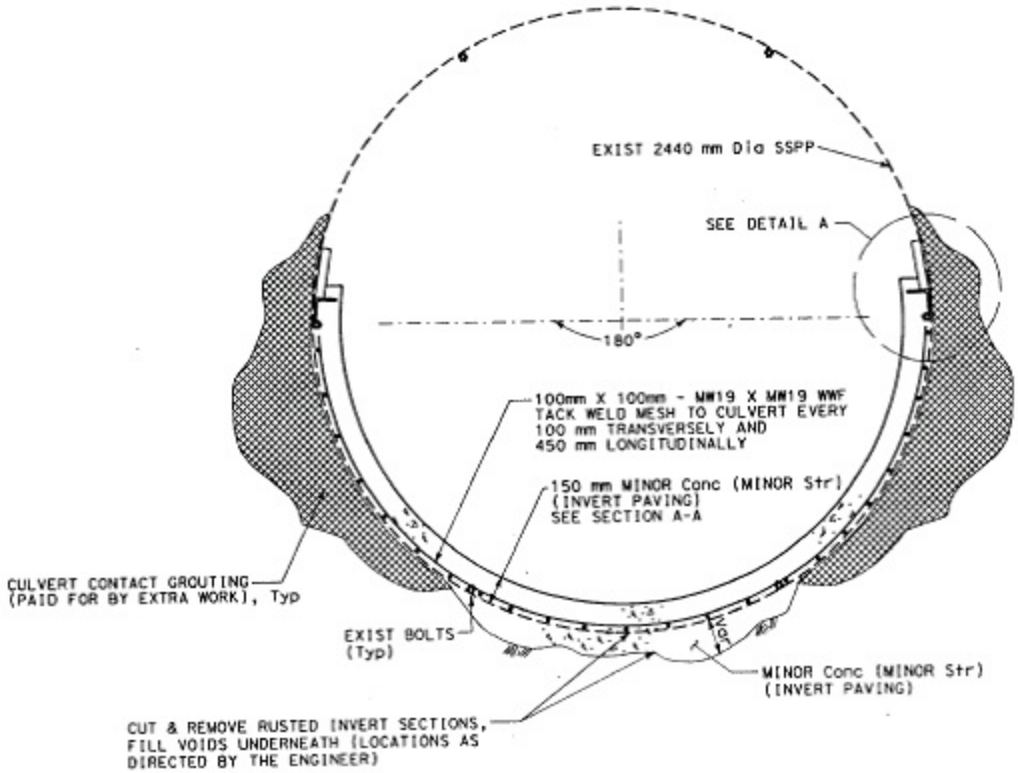

END VIEW

PIPE INVERT PAVING DETAIL

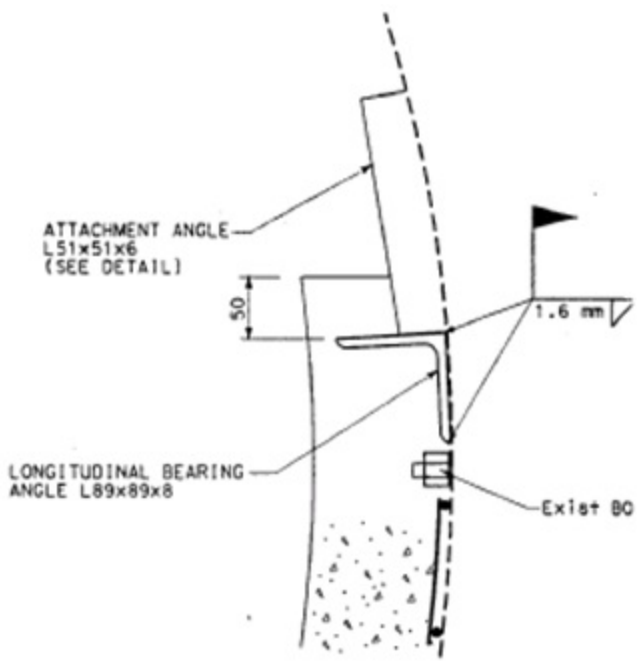

DETAIL A

An 32 inch plastic slip liner was also included into the contract to rehabilitate the 230 foot long, 36 inch diameter, and bitumen coated CMP connecting into the SSPP at the center in the median.

CONSTRUCTION

Since the environmental permits would take too long to obtain under normal project process, Maintenance Engineering proceeded with a Director's Order Informal Bid contract.

Initially construction was delayed until Cal-OSHA approved the Contractor's ventilation plan on site for welding operations inside a confined space. Prior to bidding, the Underground Classification of "Nongassy" had been assigned by the Mining and Tunneling Unit within the Division of Occupational Safety and Health.

Bulkhead and Fan at Culvert Outlet to Facilitate Venting During Welding

In general, the order of work performed was as follows:

- Cleaning (by hand)
- Welding angle iron
- Placing and tack welding WWM
- Exploratory probing for voids at 2,4,8 and 10 o 'clock positions at 6 feet centers
- Grout port installation
- Shotcrete application (including voids below invert)
- 3-sack sand slurry filling of large voids
- Slipliner installation (for lateral 36 inch CMP)
- Annular space grouting for slipliner
- Contact grouting remaining voids in large pipe

The shotcrete and 3-sack sand slurry were performed as change orders (CCO's) to the original contract.

Probing revealed the presence of a large, long void in the backfill between the sinkhole beginning near the midpoint and ending approximately 620 feet from the inlet at the 4

o'clock position. After shotcreting was completed it was decided to core some additional ports and fill the large void with a 3-sack sand slurry prior to contact grouting work previously described. In addition, the long void that was found through probing extended to the surface near the original sinkhole and was also filled with slurry placed from the surface. See below.

Large, Long Void That Was Located By Probing. Note corroded back side of culvert on right side of picture.

Freshly Placed Slurry where Void Migrated to Surface

No (contact) grout was pumped through any of the holes at 10:00 & 2:00 because no voids were found above the springline except for the original sinkhole and the large void described above, both of which were filled from the surface. Only the lower holes were pumped in the vicinity of a long void found in the backfill between the sinkhole beginning near the midpoint and ending approximately 620 feet from the inlet.

The following is a summary of the various grout and slurry volumes that were placed to fill voids:

- cubic yards of slurry in original sinkhole (right side of pipe facing downstream) at edge of shoulder, under the traveled way and a portion of median by District Maintenance
- 19 cubic yards of 3-sack sand/slurry in large void adjacent to pipe at 4:00 and 8:00 (between sinkhole and almost 200 feet downstream)
- cubic yards of slurry where large void described above day-lighted at surface on left side of pipe in the vicinity of the original sinkhole
- 23.5 cubic yards of contact grout in vicinity of large void described above.
- The volume placed of shotcrete included filling the voids below the invert and was very close to the volume of 202 cubic yards for Minor Concrete that was shown on the plans.

Tack Welding WWM

Placing Shotcrete

Contact Grouting Through Grout Port

LESSONS LEARNED

- Thrust transfer design was labor intensive and vertical angle iron design needed modifying in the field to make better contact with pipe (see pictures above); the original design did not work for the field conditions because the deformed host pipe resulted in several areas of poor contact with the longitudinal angle iron (see picture with hand). Therefore, it is incumbent for the designer to make sure their design will meet field conditions.
- A possibly more efficient rehabilitation alternative for similar metal pipes in need urgent need of repair (i.e., large enough for human entry, relatively minor deformation, invert failure with concerns about future structural degradation due to soil side corrosion and ability to support roadway and traffic loads etc) suggested by Geotech may be to shotcrete with reinforcement the entire 360 degrees (different to cement mortar lining), and, in effect, creating a custom sized new pipe inside the existing pipe. If fiber reinforced shotcrete is used (either synthetic or steel), the need for steel WWM can be eliminated entirely. On another concrete invert lining project constructed this summer, shear connector welding studs (“Nelson Studs”) were used as a thrust connector at the outer edges of the invert lining.
- California Test 643 can have environmental conditions that can vary dramatically depending upon the time of year the soil and water samples were taken. If available, use condition of existing metal culverts to determine if corrosion is present to supplement soil and water testing.
- CPT and GPR testing is limited for finding voids directly behind the pipe below the springline and should be supplemented by probing from inside the pipe.
- Repairs from CPT testing damage should be included in contract (see picture next page):

- Design changes made in field by Construction without communication to other units: 3- sack sand slurry in lieu of contact grout design used to fill largest void and decision to introduce "weepholes" in invert that were not shown on the plans (see pictures on following page):

"Cored" Grout Hole in Shotcrete Used to Fill Large Void with 3-Sack Sand Slurry Leaking Groundwater During Contact Grouting. Note capped contact grout port.

PVC Pipe "Weep" Placed in Rock Below Invert. Later, larger weeps were "cored" in addition in addition to these.

Cored Weep in Shotcrete Invert

Non-Woven Polypropylene Geotextile Material and 3/8" – 3/4" inch Diameter Gravel from Gravel Bag Headwall Used to Make Filters

Installed Gravel Filter Bag in Invert Weep

Outlet of 96-inch Pipe After Repair

Inlet of 96-Inch Pipe After Repair

- Costs: Engineers estimate---$407,000. Low bid---$472,420. Not including $100,000 for grouting around the pipe (force account). Actual completed construction cost: $480,500.

Example 2: 03-Nevada-80 PM 4.0 Culvert Repair (Castle Creek) EA 03-4C3601 (Summer 2003)

BACKGROUND

This section of Interstate 80 in Nevada County at Post Mile 4.0 was constructed over 40 years ago in 1961. At this location there are two, 144 inch diameter, Structural Steel Plate Pipes (SSPP), one under each direction of traveled way, which were constructed with the freeway as cross drainage for Upper Castle Creek. The lengths of the pipes are 169 feet (eastbound) and 179 feet (westbound).

Since 2001, under service contract, maintenance had been repairing depressions in the pavement in the vicinity of the culverts by slab jacking or slab replacement with asphalt.

During the summer of 2002, depressions in the pavement were identified by maintenance adjacent to the number one lane of the eastbound traveled way and under the entire westbound pavement in the vicinity of each culvert. See pictures below.

Dip in Number 1 EB Lane. Summer 2002 **Dip in entire WB freeway Section. Summer 2002**

PROBLEM IDENTIFICATION

Due to high flows, inspection of the culverts was not feasible in 2001; however, inspections conducted the following year (2002) revealed a corroded invert and deflection in each pipe.

Corroded and Overlapping Invert. Note oval shape of pipe

Due to the deterioration of the invert plate and the subsequent loss of hoop strength, these culverts were deforming at the invert as revealed by a wide variation in cord length measurements (eastbound: 0-15 inches, westbound 0-13 inches) between the edges of the two plates (one edge on either side of the bottom or invert plate) that overlap the invert plate. The loss of chord length represented the amount of deformation in the bottom of the culvert due to external pressures that were no longer resisted by the hoop strength of the culvert at the invert.

Over the years the bottom of the culvert had deteriorated - possibly due to corrosion from de-icing salts placed on the roadway above during winter. Once the pipe had perforated, stream flows could then pass beneath the pipe carrying away soil fines (either within the stream flow or by moving outward into the voids of the courser graded surrounding highway fill material). The as-built plans indicated the freeway fill was constructed with 'shot rock' consisting of larger diameter material than the finer grained and potentially erodible backfill adjacent to the pipes.

As the fine material from beneath the pipe was evacuated, fill from the midline of the pipe could then settle down to fill the void left by the lower evacuated material. Surrounding and surface fill material would then begin to settle into the voids left by the fill that used to surround the midline of the pipe. The structural section beneath the PCC slabs began to fail and settle in and fill the voids of the settled fill material. The PCC slabs were left bridging the void left by the failed structural section. Ultimately, the slabs began to settle unevenly and created the surface dip.

This process may have been accentuated from the vibrations of truck traffic on the relatively shallow cover of 10 – 15 feet above the pipes.

At the time of inspection in 2002, a 4 to 6-inch void existed beneath the invert throughout most of the length of each culvert. 2-inch sized aggregate from the original bedding/fill could be seen below the pipe. There were also some large voids present at the endwalls where some stream flow was seeping out.

It was concluded that corrosion was far more problematic than abrasion as a contributor to the invert perforation. Invariably, the corrugation valleys were what was perforated and not the corrugation crests. In addition, while there was some wear apparent on the connecting nuts/bolts that were in the invert, the extent of upstream side wear was very slight - again indicating that while there is/was enough abrasion to remove the zinc coating, it was not severe and some chemical action is attacking the steel.

As is typical, there were a number of small spot locations on the culvert barrels where excessive compaction (or poor handling) during construction caused the zinc coating to chip off or delaminate. In all of those locations rust had formed - most of which were well above the area where water had ever flowed. This was another indicator of the corrosive environment.

In August 2003, at the request of the District Maintenance Engineer, the corrosion technology staff conducted a corrosion investigation; this included taking culvert thickness measurements using an ultrasonic thickness gage and visual observations.

The measurements indicated that corrosion damage was limited to the lower 90 degrees.

There were perforations along the flow line for the entire length of both pipes and corrosion stains were present throughout the lower 90 degrees.

There was no corrosion present in the upper 270 degrees along both pipes.

REPAIR

Because a bid contract was not possible due to environmental lead-time, work was done under Emergency Force Account.

The original plan by Maintenance Engineering was to place a reinforced concrete invert lining in each of the culverts with no thrust connection. However, District Hydraulics expressed concerns that the loss of hoop strength may continue to allow these pipes to collapse even farther, therefore, a structural stiffening system was considered in the invert to regain the lost hoop strength.

Eastbound Pipe Prior to Concrete Placement with Temporary HDPE By-Pass, WWM and Nelson Studs

The Contech Construction Products Co. repair method employing bearing angles as used on another emergency culvert invert retrofit repair in District 3 under Highway 50 (03-ED-50-14.0) was initially chosen by the District as the thrust connection design. However, the Construction Resident Engineer requested the Underground Structures Branch within the Division of Engineering Services to provide additional alternatives for thrust transfer.

The Underground Structures Branch provided the District with the following three alternatives:

Alternative I.

1) Attach longitudinal bearing angles to culvert wall (normal to corrugations) with Nelson Studs.
2) Install (2) 1/2" dia. x 1-1/4" long CPL Spec 1 Threaded Nelson Studs at each corrugation peak (6" o/c).
3) Attach L5” x 3” x ¼” (LLV) longitudinal Bearing Angles to Nelson Studs. Holes in angles can be shop punched.
4) Fasten L5” x 3” angles onto wall with Nelson Studs using 1/2" dia. hex nut and flat washer.
5) Nelson Studs should be attached to only non-corroded portions of culvert wall.
6) Tack weld 4” x 4” – 6” x 6” WWF mesh to culvert invert at 12" o/c ea way, in order to provide composite action.
7) Pour 4" thick (minimum thickness above crest) concrete invert slab (f'_c = 2500 psi).
8) Extend concrete paving above the bearing angles. Slope concrete to provide for drainage.

Alternative II

1) Attach longitudinal bearing angles to culvert wall (normal to corrugations) with plug welds.
2) Initially tack weld L5” x 3” x ¼” (LLV) longitudinal Bearing Angles to culvert wall. Holes in angles can be shop punched.
3) Fasten L5 x 3 angles onto wall with (2) 1/2" dia. plug welds at each corrugation peak (6" o/c).
4) Plug welds should be placed at only non-corroded portions of culvert wall.
5) Tack weld 4” x 4” – 6” x 6” WWF mesh to culvert invert at 12" o/c ea way, in order to provide composite action.
6) Pour 4" thick (minimum thickness above crest) concrete invert slab (f'_c = 2500 psi) to cover bearing angles.
7) Extend concrete paving above the bearing angles. Slope concrete to provide for drainage.

Alternative III (selected)

Observations were made that the Route 80 culverts have severe out-of-plane sidewalls due to invert buckling and overlapping. Due to the undulations in the culvert invert and walls, the pre-fabricated longitudinal Bearing Angles would have to be cut into many shorter lengths in order to obtain a flush fit with the culvert walls. Also the corrugation spacing varies between the original 6" o/c to 5" o/c due to the culvert invert/wall undulations. This would prevent shop punching of holes in the longitudinal support angles due to varying spacing requirements. Consequently, a simpler repair method employing only Nelson Studs for locations with severe out-of-plane sidewalls was requested. While not as desirable as Alternatives I or II, Alternative III entails the following:

1) This procedure does not employ longitudinal Bearing Angles.
2) This repair method should only be used for culvert repairs where sidewalls are still in excellent structural condition.
3) Nelson Studs are used as shear anchors to transfer culvert wall thrust into the new concrete invert slab.
4) Weld (3) 1/2" dia. x 3-1/8" long H4L Headed Nelson Studs, spaced 3" apart vertically, at each corrugation peak (6" o/c). Nelson Studs to be attached to only non-corroded portions of culvert wall.
5) Tack weld 4” x 4” – 6” x 6” WWF mesh to bottom 90 degrees of culvert invert at 12" o/c ea way, in order to provide composite action.
6) Pour 4" thick (minimum thickness above crest) concrete invert slab (f'_C = 4000 psi) to cover Nelson Studs.
7) Concrete lining to cover lower 90-degree internal angle. Slope top portions of concrete to provide for drainage.

A structural bond to the host pipes can be achieved by using shear connector welding studs (Nelson Studs) attached with a stud welding gun as shown below:

Shear connector welding studs (Trade name Nelson Headed Anchors and Nelson Threaded Studs are acceptable structural fasteners. Nelson studs are regularly used in bridge superstructure construction. They are relatively inexpensive (roughly 25 cents each) and depending upon the overfill height and culvert pipe thrust, Nelson Headed Anchors can function to anchor and transfer the culvert thrust load from the wall into the concrete invert lining through shear transfer. In addition, they are welded electrically which avoids the gaseous fumes resulting from normal structural welding. Six longitudinal rows of studs (3 running left of center and 3 running right of center) 6 inches apart on each corrugation were installed. Approximately, 4300 studs were installed in a few days at a cost of about $7,000.

PAVING INVERT

The concrete design for the invert included a 4000 psi compressive strength and 3/8 inch aggregate along with air entraining for the freeze-thaw conditions. The 4-inch thick minor concrete invert lining was limited to the lower quadrant of the culvert (i.e., 90 degrees coverage from the 4:30 to 7:30 clock positions).

The voids directly below the invert were filled with the same concrete.

View of Both Pipes After Concrete Invert Paving

FILLING VOIDS BEHIND THE CULVERT

Before paving the invert, coupons were cut into the culvert wall in order to probe for voids. Most of the voids found were below the springline, however, a significant void was discovered near the outlet of the eastbound pipe above the springline at the 10 o' clock position. In both pipes the most significant voids were found at the inlet.

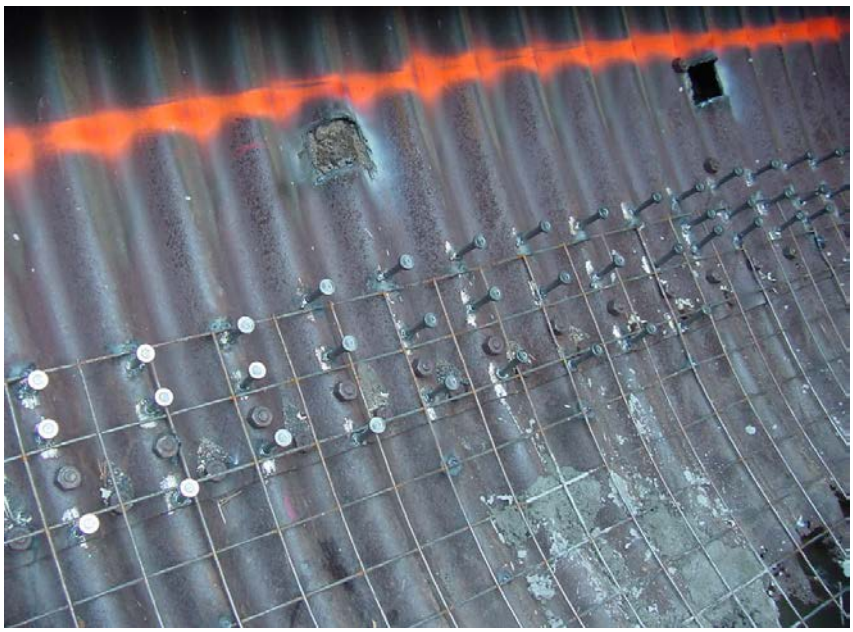

Coupons Cut in Sidewall of Culvert for Probing and Grouting

A decision was made to use polyurethane foam grout rather than cementitious grout to fill the voids behind the culvert. The decision to use polyurethane grout was based primarily on the fact that an agreement with the cementitious grouting contractor regarding Force Account rates could not be reached. Furthermore, the District already had a Maintenance service contract with a company called Uretek for slab jacking and had some success with the material for jacking operations (including this site in January 2003). Although the foam has been used in PCC slab raising work for several years on many California State Highways, there were concerns that the Uretek foam may have environmental impacts and durability issues, since it had not been used for this type of application. The Resident Engineer explained the environmental concerns with cementitious grout migrating into the creek during placement and stated that Uretek had provided data showing the foam to be inert and that it would not leach into the creek. This material is supposed to be inert in a live stream environment and will not absorb water. When first placed, high-density polyurethane rigid closed cell hydro-insensitive grout is supposed to form a mechanical seal by expanding twelve times its liquid volume in 8-12 seconds.

During grouting operations approximately 110 cubic yards of expanding grout were used. Laser and string-line monitoring of the culvert were performed to monitor deflection.

The Engineers estimate for repairs was $400,000. The Resident Engineer estimated final costs to be closer to $380,000.

LESSONS LEARNED

- Use of Nelson studs can expedite repair procedures, although preliminary investigation is required to verify that plate thickness and conditions (minimal loss due to corrosion) are satisfactory for their use. In this case, the decision to solely use Nelson Studs and totally omit using welded longitudinal bearing angles proved to be a major time saver for the District during construction.
- Use of polyurethane foam grout rather than cementitious grout to fill the voids behind the culvert or any other material that has not been tested by the Department requires approval from HQ before being shown on plans or recommended in emergency or any other repair strategies. Communication and collaboration between functional areas is key when addressing any changes that occur in the field. Polyurethane foam grout has not been tested or approved by Geotechnical Design to determine applicability and use for culvert repairs. The main issues are whether material is inert and whether it develops strength comparable to compaction grouting. This material cannot be pumped to a specified density. Its durability in this application also needs to be monitored for longevity.
- However, it should be noted that the Uretek grout, while not approved, provided some features that cementitious grouts could not provide and thus made void filling viable in this location. These include:
    1) Environmentally friendly in a live stream environment.
    2) Potentially higher percentage of void space sealed from mechanical seal and short expansion time of expanding polyurethane foam grout.
    3) Hydro-insensitive

- Corrosion Investigation was limited to wall thickness measurements. No soil or water samples were taken, therefore, no recommendations were provided for the concrete mix design placed in the invert.

Prior to jacking or repairing subsiding pavements, an initial check to locate drainage structures (culverts) below should first be undertaken. In this case, roadway slabs were either jacked or replaced prior to inspection, problem identification and subsequent repairs had been completed in the culverts below.

Example 3: 03-Yub-49 KP 9.5/PM 5.9 (3C3504) Emergency Repair of CMP (Summer 2003)

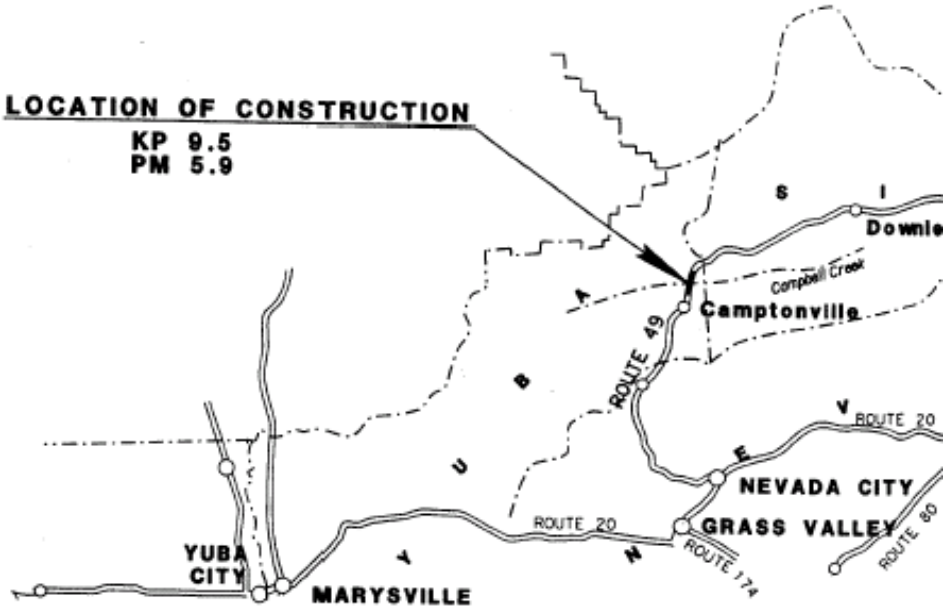

BACKGROUND

In 2002, Area Maintenance reported that the soffit of a 108-inch x 262 feet Structural Steel Plate Pipe (SSPP) culvert was collapsing causing the pavement above the pipe to crack. This culvert was originally constructed in 1940 as cross drainage for Campbell Creek on Highway 49 near Camptonville (see map above).

Inside the culvert, corrosion, a perforated invert (up to 0.5 inch perforations) and missing nuts and bolts from the steel plating were observed as a result of the corrosion. Also, the bolt pattern of the steel plates were originally constructed "in-line" with each adjacent plate instead of being offset, which might have contributed to structural weakness.

Inlet of Original Pipe

Outlet of Original Pipe

Initially Maintenance Engineering proceeded with a regular rehabilitation/repair contract and an environmental document that restricted the start of work to August (water levels, etc). However, since the rehabilitation work needed to be done before the coming winter,

an Informal Bid contract by Director's Order was executed in order to complete the repair work on time.

A study was performed by the District Hydraulics Branch to identify the condition of the existing pipe and make recommendations for pipe lining or replacement. Due to distress in both the invert and the soffit, complete lining of the pipe was selected.

Based on velocity concerns for smooth-bore pipe, the recommendation made was to use a "liner" pipe using the largest corrugated steel pipe that could be inserted.

Internal measurements of the failing original pipe were taken and hydraulic analysis verified that the diameter could be reduced to 84-inch with a CSP liner without detrimental impact. A 0.168-inch thick (8 gage) CSP liner was selected from the Alternative Pipe Culvert recommendation prepared by the District Materials Branch to provide 50 years of service life based on a soil pH of 5.85 and soil Minimum Resistivity of 2900 and assuming non-abrasive flow conditions.

CONSTRUCTION

The insertion process consisted of sliding individual 20 foot segments one at a time, coupling them and then pushing the combined pieces into the host pipe - initially using one excavator at the upstream end. After the liner was inserted to approximately the midpoint of the host pipe, a second excavator was added to pull from the outlet end. While the jacking operation was aided by the welded skids on the bottom of the CMP liner (see detail on next page), the existing bolts in the host pipe were problematic.

Once all of the liner was in place, continuous grouting of the annular space was performed.

The resulting hydrostatic pressure at the downstream end from continuous grouting of the annular space between the existing culvert and the 84-inch CSP liner placed inside caused the liner to float and buckle with grout leaking out of the liner's joints which had been specified as watertight with gaskets. The grouting operation was immediately stopped and a Contract Change Order (CCO) was developed.

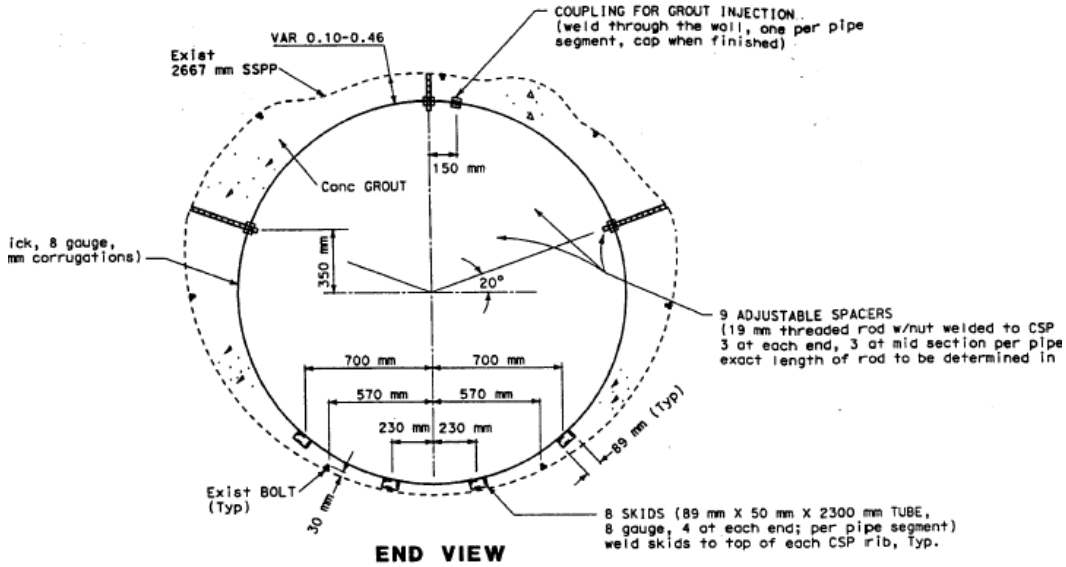

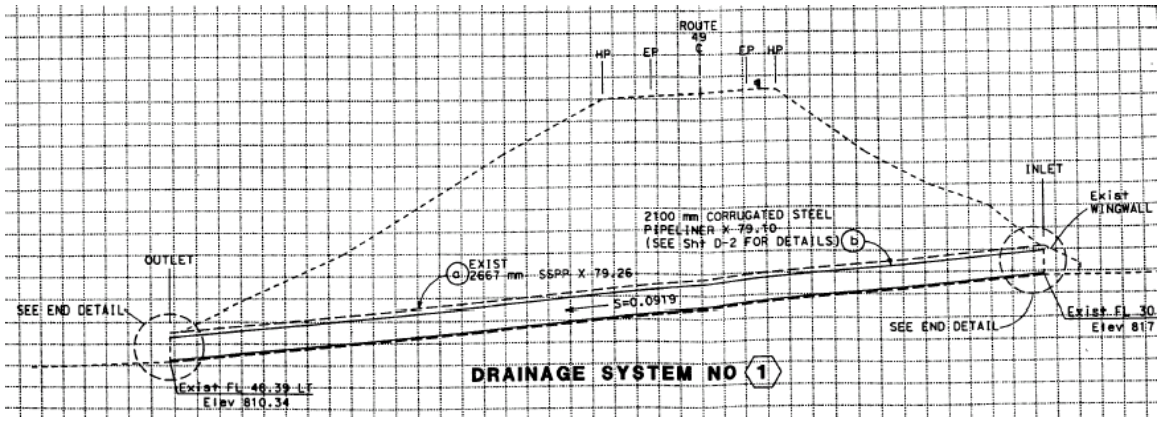

Grouting Through Grout Port in Soffit of Liner **Grout from Leaking Joints in Invert**

The CCO modified the design to welded joints for the CSP liner and the grouting from continuous to grouting in 3 sections (lifts). The continuous grouting was originally anticipated to take 2 days. The sectional grouting took 6 days. The installation of 8 welded skids as shown on the plans (see end view) was omitted to avoid additional welding.

The total completed construction cost was $340,000.

LESSONS LEARNED

- Preliminary Investigations

  To more completely determine the reasons for the culvert's failure the following studies were warranted but not performed prior to selecting a repair strategy:

  1) Wall thickness measurements in host pipe
  2) Waterside pH and resistivity
  3) Structural analysis of host pipe and proposed repair
  4) Void detection and geotechnical investigation

  At the time of repair, it was still unclear what the failure mechanism for the host pipe was. In general, coordination with Underground Structures and Geotechnical Design from within the Division of Engineering Services (DES), and Headquarters Hydraulics should be made for any liner larger than 60 inches

diameter. The repair work performed may well provide an effective solution, however, because several unknowns still exist there is a potential for reduced service life if all of the underlying mechanisms that led to failure of the original pipe have not been addressed by the repair.

- Material Selection

Because the upper half of the culvert was failing, based on the Materials Report and hydraulic analysis, it was determined that lining with a full circumferential 84-inch diameter CSP liner was the appropriate repair strategy. With the information that was gathered, i.e., from visual inspection (flexible and deformed host pipe, crack in roadway above pipe), the as-builts (profile/grade), the Alternative Pipe Recommendation (based on a soil pH of 5.85 and soil Minimum Resistivity of 2900 and assuming non-abrasive flow conditions with velocities ranging from 5 ft/s to 6.5 ft/s (see paragraph following alternative repair strategies below), and known host pipe dimensions and profile, a number of alternative repair strategies could also have been considered. Some of these include:

1) A Rigid liner design; This may have been preferable for the given design parameters to account for loading, resulting grouting pressures during construction and potential abrasive flow condition that was not identified in the Materials Report: RCP, welded pipeliners or Reinforced Polymer Mortar are all viable rigid (or semi-rigid) liner material options.
2) A flexible sliplining system with a modified high compressive strength structural concrete mix placed in stages in lieu of annular space grout with adequate consideration for bracing and joint type to handle pumping pressures. In effect, this is another “rigid liner” design to independently handle loading and assumes the host pipe no longer can. For CSP steel

pipe, usually an abrasive and corrosion resistant lining is preferred, such as PVC or HDPE.

3) A 360 degree shotcrete lining with welded wire mesh or synthetic fibers. Synthetic fiber reinforced shotcrete or shotcrete lining with welded wire mesh are preferred if ground movement is present. In tests conducted by others, at larger deformations (with consequent greater crack widths) the mesh and certain fiber reinforced shotcretes displayed exceptional residual load carrying capacity. This is another pipe within a pipe concept that is fairly easy to construct.

It should be noted that the Culvert Recommendation Report prepared by District Hydraulics identified the flow velocity to be 22 ft/s for the Design Storm discharge. The same report specifically recommended not using smooth-bore pipe. Therefore, most of the alternative repair strategies described above would also require consideration of an energy dissipator at the outlet.

If any voids behind the existing culvert had been detected, they usually require grouting before lining or other repair can proceed.

If the host pipe is deformed, any liner may be subjected to stress concentrations where host culvert is failing and soil loads are transferred. It is imperative that the host pipe can adequately handle loads by transferring stresses to the surrounding soil. For any liner placed inside of another flexible pipe, which is already under distress, some loads will be applied directly to the liner. Therefore, if it is not possible to make the host pipe capable of sustaining design loads, it should be either replaced, or lined with a structural system independently capable of handling loads.

- Construction

A preferable alternative to the welded skids to aid the liner insertion process may have been to weld steel plate to the invert of the host pipe.

Particular attention to the contractor's grouting plan for long, large diameter, flexible liners is needed for pipes on a steep grade where there is a potential for significant hydrostatic pressure. Both the specified gasketed water tight joints and method for continuous grouting needed modifying in the field to welded joints and grouting in separate lifts.

As previously discussed, the resulting hydrostatic pressure at the downstream end from continuous grouting of the annular space between the existing culvert and the 84-inch CSP liner placed inside caused the liner to float and buckle with grout leaking out of the liner's joints. In this instance, the invert elevation difference between the inlet and outlet was 24 feet.

Example 4: Compaction Grouting

Project location: Century Freeway, Los Angeles, California.

Construction period: August 1996 - August 1997

General contractor: Denver Grouting Services, Inc.

Scope of work: Approximately 6500 cubic yards compaction grouting

Contract value: $7,700,000

Background:

In March of 1995, major sinkholes occurred along a new 4-mile section of the I-105 freeway between the San Gabriel and Los Angeles Rivers in Los Angeles, CA. The sinkholes were attributed to infiltration of soil into the storm-drain system through insufficiently sealed pipe joints. Caltrans issued a multi-phased contract to Denver Grouting Services, Inc. (DGS) to: (1) stabilize the sub-soils and fill voids along alignments of Corrugated Metal (CMP) and Reinforced Concrete (RCP) storm-drain pipes beneath the freeway pavement, (2) repair leaking pipe joints, (3) mitigate liquefaction-potential along the pipe alignment under one of the pump-station structures, and (5) install water and observation wells for subsequent ground water draw-down testing.

This freeway was built as much as 40 feet below surrounding ground levels, which required a major water-pumping system to be installed at the time of construction (1993). The storm drains were installed 15 to 20 feet below the road surface, which meant the storm drain pipes were as much as 60 feet below the original ground level. The groundwater table was less than 5 feet below the freeway pavement in some areas.

Solution:

Compaction Grouting was the method chosen to support the roadway and traffic loads by stabilizing the soils surrounding 14,500 feet of RCP and CMP storm drains, and to densify liquefiable sands beneath one of the pump structures. Storm-drain sizes included 24, 30, 36, 42, 48, and 54 inch diameters. It should be emphasized that compaction grouting primarily applies to voids not immediately adjacent to the culvert (i.e., beyond 12 inches) to support the roadway and traffic loads. See Index 6.1.2 for grouting voids in the soil envelope immediately adjacent to the culvert.

Geotechnical Conditions:

The storm drains were installed through alluvial deposits consisting of medium sand, silty sand, silt and clayey silt layers which varied in thickness along the alignment. A mixture of these native soils had been used as storm-drain "trench" backfill at the time of construction. In general, very low densities and voids existed around storm drains where they were below the groundwater table, and soil infiltration was maximized. Fluctuating water tables had also affected the remaining alignments to varying degrees, creating unacceptable densities and created some localized voiding. Because depths of the CMP and RCP drains varied between 15 to 20 feet. (below the road surface), it was determined that the ground improvement program should extend from a minimum of 5 feet below the

storm drains invert up to within 5 feet of the road surface. The work was to be performed with minimal disruption of traffic.

Cut-off Criteria:

The grout injection cutoff criteria included:

Maximum 0.5-inch allowable pavement uplift or 0.5-inch storm-drain deflection. A predetermined volume of grout per foot stage.

Maximum grout pressure "at the header" of 450 psi, or a sudden 50 psi drop in pressure, indicating soil shear or grout travel was occurring.

Equipment:

The Compaction Grout equipment employed met the requirements of Caltrans to minimize its operational "effects on traffic" and involved "The Denver System™" as developed by DGS, including:

Mobile Grout Batch Plants

DGS 2015 Mobile Grout Pumps

DGS 2" I.D. Grout Casing, 3 to 5 foot lengths

DGS Grout Casing Retrieval Systems

Specialized Casing Driving Systems

Appendix H – Design Examples

Design Example 1: (36 in. x 227 ft 10-ga CMP)

Video Inspection Photo

Originally installed in 1974, a 10 gage CMP has a maximum cover of approximately 50 feet, and a slope of 12.3%. Inspection photos taken in 2004 indicate a stained invert but no perforations. The culvert barrel shape and joints were deemed "in good condition". In 2007 a video inspection was performed and the inspection report indicated:

> *"Small holes exist in the invert throughout the pipe with the outlet side of the pipe having the most perforations. At the inlet, we did not see any perforations. Small to medium rock bed loads exist at this location. The low flow is mostly going through the pipe rather than underneath or elsewhere."*

The original Materials Report stated both the pH and resistivity for the site were neutral (7.2 and 10,000 ohm-cm) and the stream materials were described 'abrasive'. The report recommended using additional gage thickness for design. The District determined that abrasion was the primary cause of premature degradation at the site. The estimated outlet velocity based on the $Q_{2\text{-}5}$ discharge of the original CMP was 16 fps.

The District decided to evaluate the feasibility of sliplining using plastic pipe liner (see Index 6.1.3.1.1) since a large enough construction footprint was available within the right of way and the 36 inch diameter host pipe was too small for human entry invert paving.

The first step was to survey the existing culvert carefully by personnel with confined space training (see Index 3.1.3) to determine the maximum diameter of pipe liner that could be inserted through the entire length of the host pipe depending on the control points. Since no major deflections were found, a 32 inch maximum OD was established as a design parameter.

Next, the minimum liner thickness for a 50 year design was determined from the following steps:

1) Theoretical metal loss due to corrosion:

   From HDM Figure 855.3B (pH=7.2, min. resistivity = 10,000 ohm cm), for an original metal thickness of 0.138 inches (10 gage) the estimated number of years to first perforation is 90 years. Therefore, the corrosive wear rate to the pipe is estimated at 1.53 mils/year or 51 mils after 33 years.

2) Estimated metal loss due to abrasion:

   From the video inspection, the pipe was already beginning to perforate after 33 years, therefore, the additional wear rate for abrasion = 138 mils (original metal thickness) - 51 mils (metal loss due to corrosion) = 87 mils

   87 mils/33 years = 2.6 mils/year

3) Abrasion level:

   The estimated outlet velocity based on the Q_{2-5} discharge of the original CMP is 16 fps. With a 2.6 mils/year metal loss for abrasion, HDM Tables 855.2A and 855.2D indicated the abrasion level using 'engineering judgment' was between level 5 and level 6. The velocity component was in the level 6 range, but the bed load volume was not ("small to medium bed loads exist at this location").

4) Minimum liner thickness from HDM Table 855.2F:

   The minimum plastic liner thickness needed for a 50 year design from HDM 855.2F for level 6 using 16 fps was 0.6 inches (PVC) and 1.2 inches (HDPE). For the upper range of level 5, the minimum plastic liner thickness needed was 0.35 inches (PVC) and 0.875 inches (HDPE) respectively. Using 'engineering judgment' it was determined to use minimum plastic liner thicknesses of 0.5 inches (PVC) and 1 inch (HDPE). From HDM Table 853.1B, the following material choices were potential candidates:

   - DR 41 PVC (AWWA C905) 32 inch OD
   - SDR 35 PVC (46 psi) 27 inch OD, and
   - SDR 32.5 HDPE (ASTM Designation F 714) 32 inch OD

   From Index 6.1.3.1.1.3, HDPE solid wall slipliner: a 32" OD SDR 32.5 liner has a wall thickness of 0.985 inches and an ID of 30.2 inches. This type of pipe can be fusion welded or connected with joints that have no bell. 30 inch DR 41 PVC (AWWA C905) is manufactured with an OD of 32 inches, a 0.78 inch minimum wall thickness and an ID of 30.44 inches and is also fusion welded. However, for the SDR 35 PVC pipe to fit into the 36 inch diameter host pipe with annular space grout, a pipe OD of 27 inches and a bell OD dimension of 32.5 inches is required. With a 0.75 inch minimum wall thickness the ID is reduced 25.5 inches. See below:

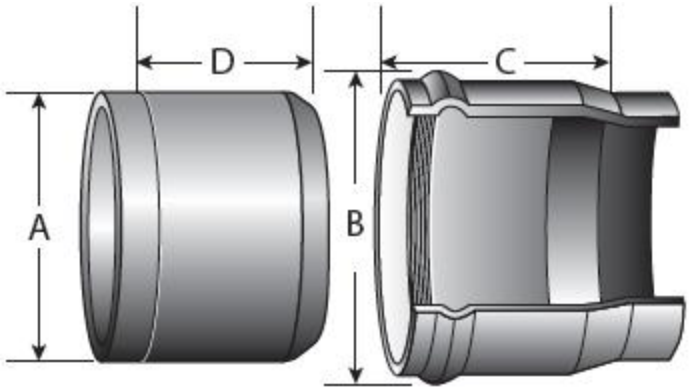

27 in. OD SDR 35 PVC Pipe with 32.5 in. Diameter Bell

For a 25.5 inch ID, hydraulic calculations indicated overtopping nearby at the design discharge for the diameter reduction needed to fit the bell into the host pipe:

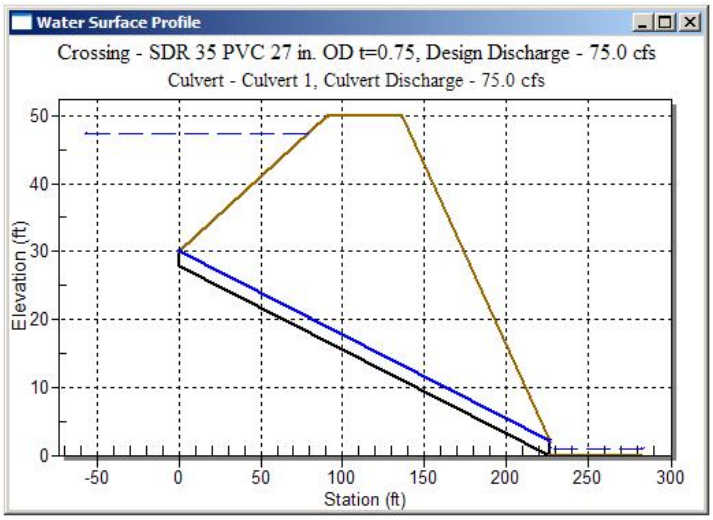

Headwater Analysis for SDR 35 PVC

For the two fusion welded options, the calculated headwater elevation increased by 4.8 feet for the design discharge and did not exceed the available headwater (i.e., no overtopping):

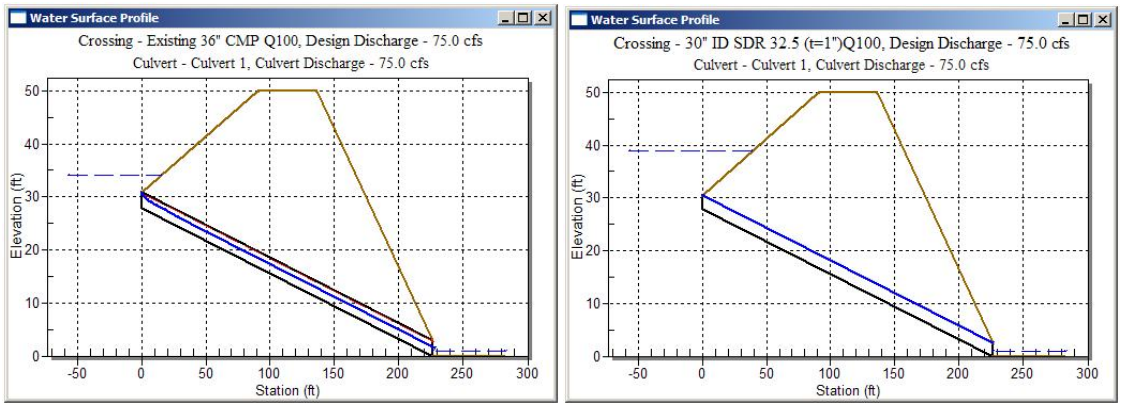

Headwater Comparison of Existing CMP and 30 in. ID Liner

The estimated design (Q_{100} outlet) velocity of the original CMP was 19 fps. For an assumed 30 inch (32 inch OD) smooth walled liner in place, the estimated peak (outlet) velocity was 29 fps which occurred at a discharge below the 100-year design discharge. The 100-year design discharge flowed full which reduced the velocity by almost 50 percent due to friction losses. However, because the existing material was worn to bedrock at the outlet there was no consideration for energy dissipation.

Two contract bid items were established - each with a pay quantity of 227 LF and SSP no. 15-6.10 was edited to include two alternatives, i.e., SDR 32.5 HDPE 32 inch OD HDPE solid wall pipe (AASHTO M 326 and ASTM F 714), and 30 inch SDR 41 PVC (AWWA C905).

OTHER CONSIDERATIONS

From the survey of the existing culvert by personnel with confined space training, no voids in the invert were noted. However, a significant period of time may pass from the video inspection used for design to construction. Typically, wherever there are voids in the materials below the invert of a small diameter culvert and these voids are greater than 3 inches deep, they should be filled with slurry cement backfill. Therefore, SSP no. 15-6.02 was included and bid item number 066139 was added to be paid for as change order work.

To maintain maximum hydraulic efficiency in inlet control, a worn flared end section at the inlet was replaced; however, if the design headwater was greater than the available headwater, a 4 foot headwater reduction was deemed possible using a 1 inch thick cured in place pipe (CIPP) with no annular space grout. HDM Table 855.2F indicates the abrasion resistance of CIPP to be slightly higher than HDPE. Therefore, the designer added 1 inch thick CIPP as a third liner alternative in the bid package. See HDM Index 853.4.

A 0.25 inch thick welded steel pipeliner (with annular space grout - see Index 5.1.2.2.4) was also considered and met all of the design parameters, however, because structural repairs were not required it was discarded.

Calcium aluminate mortar was not considered due to an excessive design thickness of 5 inches which would have resulted in a 10 inch reduction in diameter.

Design Example 2: 108 inch x 384 ft SSPP (10 gage)

From the as-builts, the SSPP was placed in 1978. From Maintenance inspection records it was determined the first perforation in the invert occurred within approximately 25 years. The pH and resistivity for the site is 7.1 and 1,000 ohm-cm. The Q_{2-5} year velocity in the pipe is estimated to be 15-16 fps and the channel materials are abrasive (from field review, HDM Table 855.2A and Table 855.2B, the abrasion level is 6).

Abrasive Channel Materials and Worn Invert

Design an invert repair for a 50 year maintenance free service life.

Solution**:**

1) Original thickness = 0.140 inches (10 gage)
2) From HDM Figure 855.3B, with pH= 7.1 and R=1000 ohm-cm, years to perforation (corrosion) = 19 years x 2.8 (gage factor) = 53 years. Therefore, expected annual wear rate (corrosion) = 140/53 = 2.6 mils/year

   2.6 mils/year x 25 (years to 1st perf.) = 65 mils
3) 140 mils – 65 mils =75 mils total abrasive wear
4) 75 mils/25 (years to 1st perf.) = 3 mils/year abrasive wear
5) Compare wear rate with HDM Table 855.2D for a Q_{2-5} year flow velocity of 15.5 fps = 3.25 mils/year abrasive wear
6) Use 3 mils/year since years to first perforation were known in this case
7) See HDM Table 855.2E. Multiply estimated metal wear rate by a factor of 75-100 and then multiply by number of years design service life (50) for total design thickness (inches) of concrete: 3 mils/year x 50 years x 75 to 100 = 11.2 to 15 inches

Note HDM Table 855.2F provides thickness guidance for concrete for abrasion levels between 4 and 5 but not for level 6. AltPipe will estimate concrete loss due to abrasion regardless of abrasion level. However, it is recommended to use the above procedure when years to first perforation are known and the abrasion wear rate can be estimated since each culvert site is unique.

The designer must now determine if there is enough available headwater elevation at the site to accommodate a concrete lining thickness of 11 - 15 inches. HDM Table 855.2F

provides thickness guidance for alternative materials at various abrasion levels. This site is within the lower range of abrasion level 6. From Table 855.2F, alternative invert linings include: paving a 3 inch thick layer of calcium aluminate abrasion resistant concrete (see footnote 5), placing 0.3 inch minimum thick steel plate, or concreted rock slope protection (see footnote 1 for abrasion level 6).

Worn Invert (Abrasion) Before and After Repairs

In this case there was enough available headwater elevation at the site to accommodate a concrete invert lining thickness of up to 15 inches and concreted rock slope protection with 'facing' selected for the concreted rock grading from Section 72 of the Standard Specifications because it compared well with the maximum bedload size (see photos).

OTHER CONSIDERATIONS

In addition to determining the feasibility and design of paving the invert, a site investigation by the designer and the corrosion unit within DES was performed which determined:

- A large void was present below the invert
- Voids existed as high as 10 o clock (from hammer soundings)
- Minimal deflection (6%) from measurements taken inside
- The original metal thickness (0.138 in) existed at 5 & 7 o clock and higher

Since a significant section of the invert was missing Underground Structures within DES was consulted regarding input parameters for the following standard details:

- XS-17-060-1 Corrugated Metal Culvert: General Procedures for Invert Repair
- XS-17-060-2 Corrugated Metal Culvert: Details for Invert Repair

Bid items were established separately for filling the invert void with slurry cement backfill and for contact grouting the remaining voids. Section 15-6.03 includes specifications for contact grouting. Section 15-6.02 (fill culvert voids) was not used in this example because of the separate bid items already established.

Supplemental funds were added to the project for the unknown quantities of slurry cement backfill and grout described in payment Sections 15-6.01D and 15-6.03D.

Design Example 3: (84" x 145 ft RCP)

Originally an 84" – 10 gage SSPP (L=145 feet) was placed in 1971 and subsequently replaced with an RCP in 2006 after the invert failed and a large depression appeared on the roadway. See photos below.

Failed Original 84" - 10-gage SSPP

By 2011 the new pipe barrel was prematurely experiencing excessive invert wear and some of the steel reinforcement was exposed immediately downstream of the last joint. Therefore the RCP had already reached the end of its 'maintenance free' service life after just 5 years and the concrete had worn at least an inch and was in need of repairs. See photo below.

Exposed Steel Reinforcement

Hydraulic analysis of the RCP indicated the $Q_{2\text{-}5}$ velocity in the pipe ranged from 12 fps at the inlet to 22 fps at the outlet. To determine the wear rate of the site, both the failed original SSPP and the worn RCP were examined. Using the estimated wear rate based on assuming 30 years until first perforation of the 10-gage (0.140 in.) original SSPP, the combined abrasion/corrosion wear for steel at the site was approximately 5 mils (0.0046 in.) per year. Based on HDM Figure 855.3B (site pH = 6.8 and the min. resistivity = 1,100 ohm-cm) the abrasive wear component of the steel was estimated at 1.9 mils/year:

1) Original thickness = 0.140 inches (10 gage)
2) From HDM Figure 855.3B, with pH= 6.8 and R=1,100 ohm-cm, years to perforation (corrosion) = 18 years x 2.8 (gage factor) = 50.4 years. Therefore, expected annual wear rate (corrosion) = 140/50.4 = 2.78 mils/year

   2.78 mils/year x 30 (years to 1st perf.) = 83 mils (theoretical corrosion wear after 30 years)
3) 140 mils – 83 mils =57 mils total abrasive wear after 30 years

   57 mils/30 (years to 1st perf.) = 1.9 mils/year abrasive wear rate (approximately abrasion level 5 in HDM Tables 855.2D and 855.2F)

At this site, to obtain 50 years or more maintenance free service life, a 3 gage structural steel plate pipe was required.

For the existing RCP (see photo below), the estimated wear rate of the 1-inch concrete cover was a simple calculation based on 5 years until first exposure of the steel reinforcement. The estimated wear of the concrete is 1-inch/5 years or 200 mils/year (0.2 in/year).

In this case, the site data compared quite favorably with HDM Table 855.2B which indicates the relative wear between concrete and steel ranges from 75 to 100.

Existing 84 inch RCP Replacement at 5 years

From HDM Tables 855.2D and 855.2A, 1.9 mils/year anticipated wear for the steel indicates the abrasion level was 5 and RCP is generally not recommended. Therefore, to provide the required 50 year service life for repairs to the RCP invert, the following options were recommended:

- Pave lower 90 degrees of invert with 10 inches (7 sack 6000 psi) concrete shaped with a flat bottom to spread flow concentration, or
- Pave lower 90 degrees of invert with 3 inches abrasion resistant (calcium aluminate based) concrete or mortar, or
- Anchor 3 gage or 1 gage SSP sections to invert (lots of drilling & epoxy work!)

The concrete invert paving repair option was selected by the District. At the inlet where the $Q_{2\text{-}5}$ velocity in the pipe was lower (12 fps compared to 22 fps at the outlet), the paving transitioned to a 6 inch section. All other hydraulic parameters for allowable headwater were satisfied.

Concrete Invert Repairs with Trapezoidal Section