# CALTRANS

# SEISMIC DESIGN CRITERIA
# VERSION 1.3

## FEBRUARY 2004

Caltrans

# 1. INTRODUCTION

The Caltrans Seismic Design Criteria (SDC) specify the minimum seismic design requirements that are necessary to meet the performance goals established for Ordinary bridges in Memo to Designers (MTD) 20-1.

The SDC is a compilation of new seismic design criteria and existing seismic design criteria previously documented in various locations. The goal is to update all the Offices of Structures Design (OSD) design manuals[1] on a periodic basis to reflect the current state of practice for seismic bridge design. As information is incorporated into the design manuals, the SDC will serve as a forum to document Caltrans' latest changes to the seismic design methodology. Proposed revisions to the SDC will be reviewed by OSD management according to the process outlined in MTD 20-11.

The SDC applies to Ordinary Standard bridges as defined in Section 1.1. Ordinary Nonstandard bridges require project specific criteria to address their non-standard features. Designers should refer to the OSD design manuals for seismic design criteria not explicitly addressed by the SDC.

The following criteria identify the minimum requirements for seismic design. Each bridge presents a unique set of design challenges. The designer must determine the appropriate methods and level of refinement necessary to design and analyze each bridge on a case-by-case basis. The designer must exercise judgment in the application of these criteria. Situations may arise that warrant detailed attention beyond what is provided in the SDC. The designer should refer to other resources to establish the correct course of action. The OSD Senior Seismic Specialists, the OSD Earthquake Committee, and the Earthquake Engineering Office of Structure Design Services and Earthquake Engineering (SDSEE) should be consulted for recommendations.

Deviations to these criteria shall be reviewed and approved by the Section Design Senior or the Senior Seismic Specialist and documented in the project file. Significant departures shall be presented to the Type Selection Panel and/or the Design Branch Chief for approval as outlined in MTD 20-11.

This document is intended for use on bridges designed by and for the California Department of Transportation. It reflects the current state of practice at Caltrans. This document contains references specific and unique to Caltrans and may not be applicable to other parties either institutional or private.

## 1.1 Definition of an Ordinary Standard Bridge

A structure must meet all of the following requirements to be classified as an Ordinary Standard bridge:

- Span lengths less than 300 feet (90 m)
- Constructed with normal weight concrete girder, and column or pier elements
- Horizontal members either rigidly connected, pin connected, or supported on conventional bearings by the substructure, isolation bearings and dampers are considered nonstandard components.

[1] Caltrans Design Manuals: Bridge Design Specifications, Memo To Designers, Bridge Design Details, Bridge Design Aids, Bridge Design Practice

- Dropped bent caps or integral bent caps terminating inside the exterior girder, C-bents, outrigger bents, and offset columns are nonstandard components.
- Foundations supported on spread footing, pile cap w/piles, or pile shafts
- Soil that is not susceptible to liquefaction, lateral spreading, or scour

## 1.2 Types of Components Addressed in the SDC

The SDC is focused on concrete bridges. Seismic criteria for structural steel bridges are being developed independently and will be incorporated into the future releases of the SDC. In the interim, inquiries regarding the seismic performance of structural steel components shall be directed to the Structural Steel Technical Specialist and the Structural Steel Committee.

The SDC includes seismic design criteria for Ordinary Standard bridges constructed with the types of components listed in Table 1.

**Table 1**

| Superstructure | Substructure | Foundation | Abutment |
|---|---|---|---|
| Cast-in-place | Reinforced concrete | Footings or pile caps | End diaphragms |
| -- Reinforced concrete | -- Single column bents | Shafts | Short seat |
| -- Post-tensioned concrete | -- Multi-column bents | -- Mined | High cantilever |
| Precast | -- Pier walls | -- CIDH | |
| -- Reinforced concrete | -- Pile extensions | Piles | |
| -- Pre-tensioned concrete | | -- CISS | |
| -- Post-tensioned concrete | | -- Precast P/S concrete | |
| | | -- Steel pipe | |
| | | -- H Sections | |
| | | -- CIDH | |
| | | -- Proprietary | |

## 1.3 Bridge Systems

A bridge system consists of superstructure and substructure components. The bridge system can be further characterized as an assembly of subsystems. Examples of bridge subsystems include:

- Longitudinal frames separated by expansion joints
- Multi-column or single column transverse bents supported on footings, piles, or shafts
- Abutments

Traditionally, the entire bridge system has been referred to as the global system, whereas an individual bent or column has been referred to as a local system. It is preferable to define these terms as relative and not absolute measures. For example, the analysis of a bridge frame is global relative to the analysis of a column subsystem, but is local relative to the analysis of the entire bridge system.

## 1.4 Local and Global Behavior

The term "local" when pertaining to the behavior of an individual component or subsystem constitutes its response independent of the effects of adjacent components, subsystems or boundary conditions. The term "global" describes the overall behavior of the component, subsystem or bridge system including the effects of adjacent components, subsystems, or boundary conditions. See Section 2.2.2 for the distinction between local and global displacements.

# 2. DEMANDS ON STRUCTURE COMPONENTS

## 2.1 Ground Motion Representation

Caltrans' Materials Engineering and Testing Service (METS) and Geotechnical Services (GS) will provide the following data defining the ground motion in the Preliminary Geology Recommendations (PGR).

- Soil Profile Type
- Peak rock acceleration for the Maximum Credible Earthquake (MCE)
- Moment magnitude for the MCE
- Acceleration Response Spectrum (ARS) curve recommendation
- Fault distance

Refer to Memo to Designers 1-35 for the procedure to request foundation data.

### 2.1.1 Spectral Acceleration

The horizontal mean spectral acceleration can be selected from an ARS curve. GEE will recommend a standard ARS curve, a modified standard ARS curve, or a site-specific ARS curve. Standard ARS curves for California are included in Appendix B. See Section 6.1.2 for information regarding modified ARS curves and site specific ARS curves.

### 2.1.2 Horizontal Ground Motion

Earthquake effects shall be determined from horizontal ground motion applied by either of the following methods:

Method 1 The application of the ground motion in two orthogonal directions along a set of global axes, where the longitudinal axis is typically represented by a chord connecting the two abutments, see Figure 2.1.

Case I: Combine the response resulting from 100% of the transverse loading with the corresponding response from 30% of the longitudinal loading.

Case II: Combine the response resulting from 100% of the longitudinal loading with the corresponding response from 30% of the transverse loading.

Method 2 The application of the ground motion along the principal axes of individual components. The ground motion must be applied at a sufficient number of angles to capture the maximum deformation of all critical components.

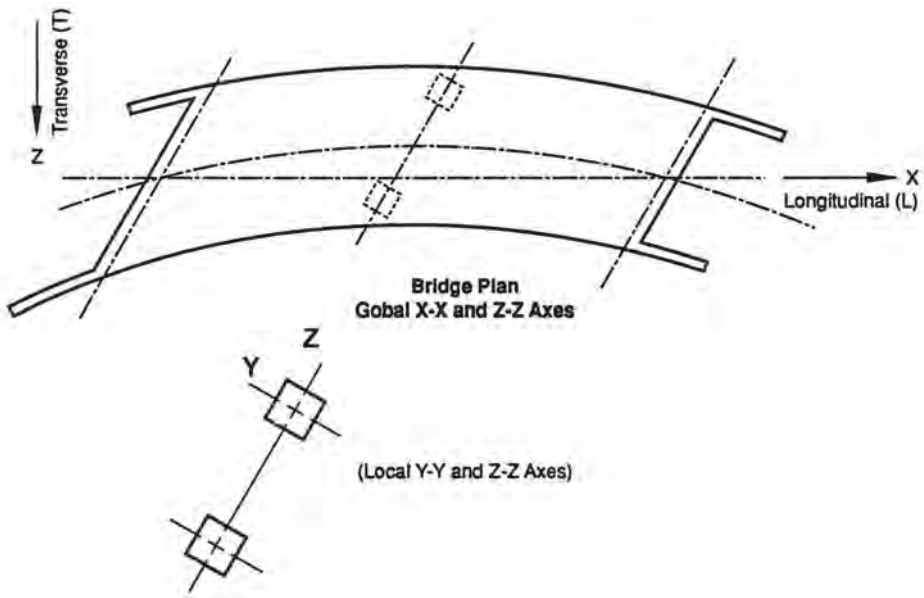


**Figure 2.1 Local–Global Axis Definition**

### 2.1.3 Vertical Ground Motion

For Ordinary Standard bridges where the site peak rock acceleration is 0.6g or greater, an equivalent static vertical load shall be applied to the superstructure to estimate the effects of vertical acceleration.[2] The superstructure shall be designed to resist the applied vertical force as specified in Section 7.2.2. A case-by-case determination on the effect of vertical load is required for Non-standard and Important bridges.

### 2.1.4 Vertical/Horizontal Load Combination

A combined vertical/horizontal load analysis is not required for Ordinary Standard bridges.

### 2.1.5 Damping

A 5% damped elastic ARS curve shall be used for determining the accelerations for Ordinary Standard concrete bridges. Damping ratios on the order of 10% can be justified for bridges that are heavily influenced by energy dissipation at the abutments and are expected to respond like single-degree-of-freedom systems. A reduction factor, $R_D$ can be applied to the 5% damped ARS coefficient used to calculate the displacement demand.

[2] This is an interim method of approximating the effects of vertical acceleration on superstructure capacity. The intent is to ensure all superstructure types, especially lightly reinforced sections such as P/S box girders, have a nominal amount of mild reinforcement available to resist the combined effects of dead load, earthquake, and prestressing in the upward or downward direction. This is a subject of continued study.

The following characteristics are typically good indicators that higher damping may be anticipated [3].

- Total length less than 300 feet (90 m)
- Three spans or less
- Abutments designed for sustained soil mobilization
- Normal or slight skew (less than 20 degrees)
- Continuous superstructure without hinges or expansion joints

$$R_D = \frac{1.5}{[40c+1]} + 0.5 \tag{2.1}$$

$ARS' = (R_D)(ARS)$

$c$ = damping ratio ($0.05 \leq c \leq 0.1$)

$ARS$ = 5% damped ARS curve

$ARS'$ = modified ARS curve

However, abutments that are designed to fuse (seat type abutment with backwalls), or respond in a flexible manner, may not develop enough sustained soil-structure interaction to rely on the higher damping ratio

## 2.2 Displacement Demand

### 2.2.1 Estimated Displacement

The global displacement demand estimate, $\Delta_D$ for Ordinary Standard bridges can be determined by linear elastic analysis utilizing effective section properties as defined in Section 5.6.

Equivalent Static Analysis (ESA), as defined in Section 5.2.1, can be used to determine $\Delta_D$ if a dynamic analysis will not add significantly more insight into behavior. ESA is best suited for bridges or individual frames with the following characteristics:

- Response primarily captured by the fundamental mode of vibration with uniform translation
- Simply defined lateral force distribution (e.g. balanced spans, approximately equal bent stiffness)
- Low skew

Elastic Dynamic Analysis (EDA) as defined in Section 5.2.2 shall be used to determine $\Delta_D$ for all other Ordinary Standard bridges.

The global displacement demand estimate shall include the effects of soil/foundation flexibility if they are significant.

### 2.2.2 Global Structure Displacement and Local Member Displacement

Global structure displacement, $\Delta_D$ is the total displacement at a particular location within the structure or subsystem. The global displacement will include components attributed to foundation flexibility, $\Delta_f$ (i.e. foundation rotation or translation), flexibility of capacity protected components such as bent caps $\Delta_b$, and the flexibility attributed to elastic and inelastic response of ductile members $\Delta_y$ and $\Delta_p$ respectively. The analytical model for determining the displacement demands shall include as many of the structural characteristics and boundary conditions affecting the structure's global displacements as possible. The effects of these characteristics on the global displacement of the structural system are illustrated in Figures 2.2 & 2.3.

Local member displacements such as column displacements, $\Delta_{col}$ are defined as the portion of global displacement attributed to the elastic displacement $\Delta_y$ and plastic displacement $\Delta_p$ of an individual member from the point of maximum moment to the point of contra-flexure as shown in Figure 2.2.

### 2.2.3 Displacement Ductility Demand

Displacement ductility demand is a measure of the imposed post-elastic deformation on a member. Displacement ductility is mathematically defined by equation 2.2.

$$\mu_D = \Delta_D / \Delta_{Y(i)} \tag{2.2}$$

Where:

$\Delta_D$ = The estimated global frame displacement demand defined in Section 2.2.2

$\Delta_{Y(i)}$ = The yield displacement of the subsystem from its initial position to the formation of plastic hinge (*i*) See Figure 2.3

### 2.2.4 Target Displacement Ductility Demand

The target displacement ductility demand values for various components are identified below. These target values have been calibrated to laboratory test results of fix-based cantilever columns where the global displacement equals the column's displacement. The designer should recognize as the framing system becomes more complex and boundary conditions are included in the demand model, a greater percentage of the global displacement will be attributed to the flexibility of components other than the ductile members within the frame. These effects are further magnified when elastic displacements are used in the ductility definition specified in equation 2.2 and shown in Figure 2.3. For such systems, including but not limited to, Type I or Type II shafts, the global ductility demand values listed below may not be achieved. The target values may range between 1.5 and 3.5 where specific values cannot be defined.

| | |
|---|---|
| Single Column Bents supported on fixed foundation | $\mu_D \leq 4$ |
| Multi-Column Bents supported on fixed or pinned footings | $\mu_D \leq 5$ |
| Pier Walls (weak direction) supported on fixed or pinned footings | $\mu_D \leq 5$ |
| Pier Walls (strong direction) supported on fixed or pinned footings | $\mu_D \leq 1$ |

Minimum ductility values are not prescribed. The intent is to utilize the advantages of flexible systems, specifically to reduce the required strength of ductile members and minimize the demand imparted to adjacent capacity protected components. Columns or piers with flexible foundations will naturally have low displacement ductility demands because of the foundation's contribution to $\Delta_Y$. The minimum lateral strength requirement in Section 3.5 or the P-$\Delta$ requirements in Section 4.2 may govern the design of frames where foundation flexibility lengthens the period of the structure into the range where the ARS demand is typically reduced.

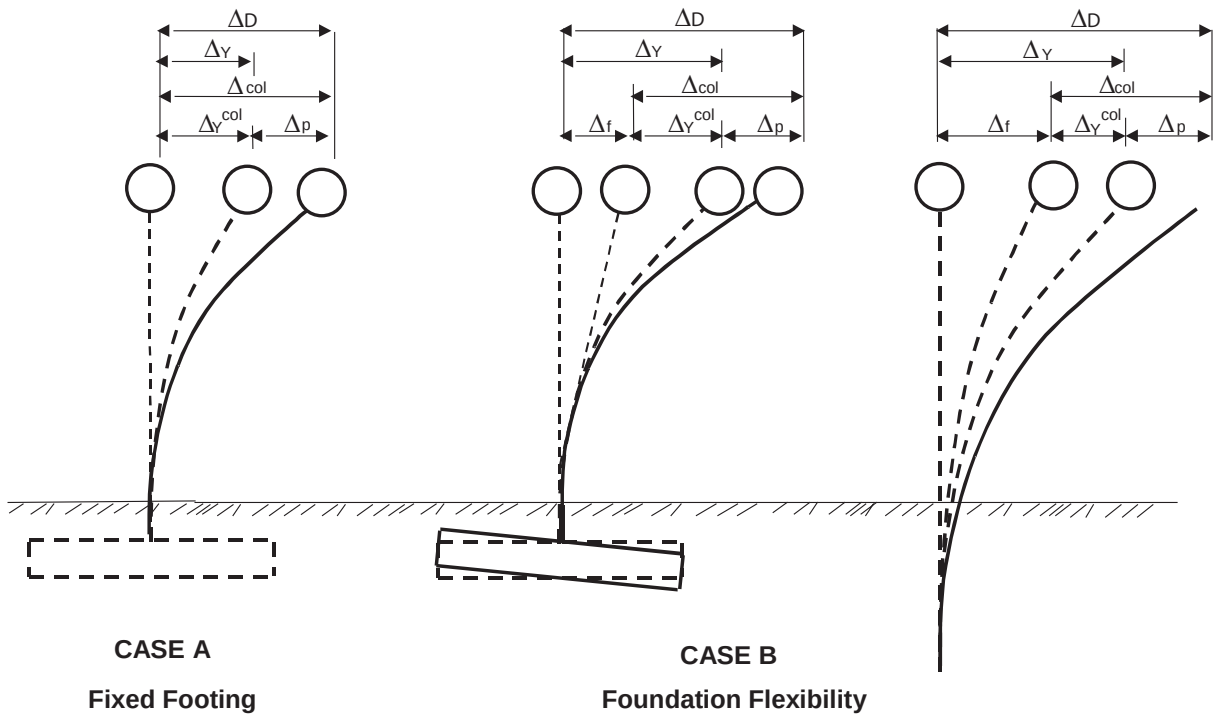


Note: For a cantilever column w/fixed base $\Delta_Y^{col} = \Delta_Y$

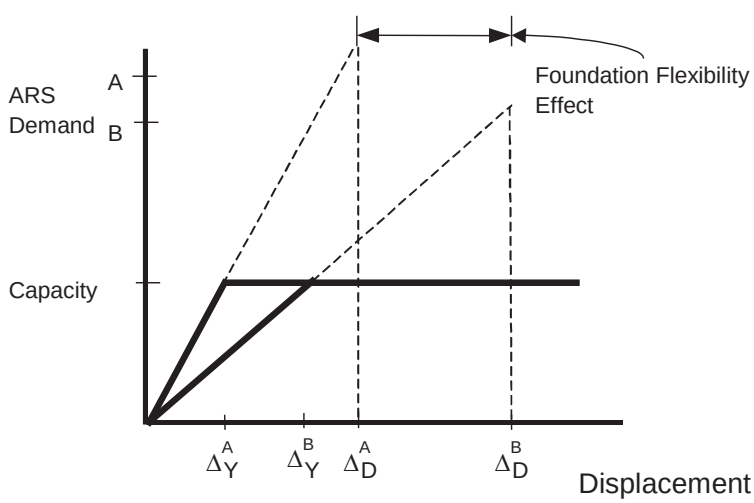


**Figure 2.2 The Effects of Foundation Flexibility on Force-Deflection Curve of a Single Column Bent**

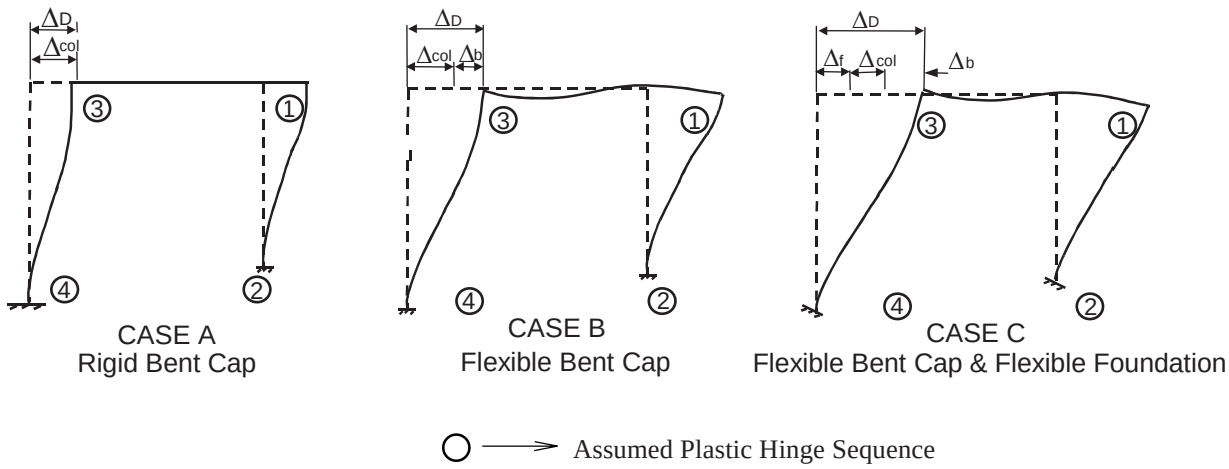


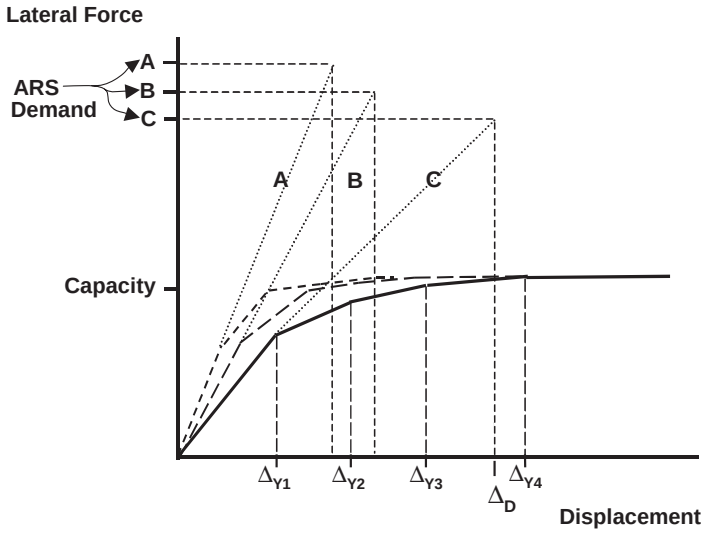


**Figure 2.3 The Effects of Bent Cap and Foundation Flexibility on Force-Deflection Curve of a Bent Frame**

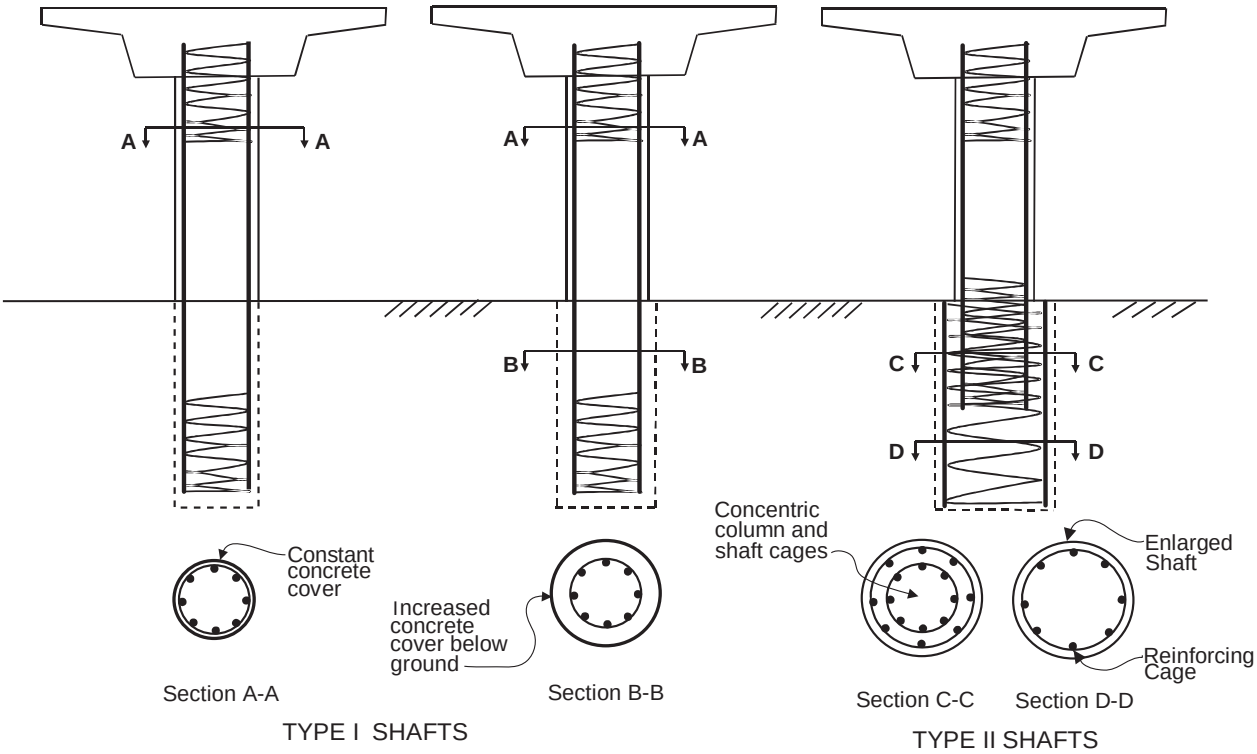


**Type I Pile Shafts**

Type I pile shafts are designed so the plastic hinge will form below ground in the pile shaft. The concrete cover and area of transverse and longitudinal reinforcement may change between the column and Type I pile shaft, but the cross section of the confined core is the same for both the column and the pile shaft. The global displacement ductility demand, $\mu_D$ for a Type I pile shaft shall be less than or equal to the $\mu_D$ for the column supported by the shaft.

**Type II Pile Shafts**

Type II pile shafts are designed so the plastic hinge will form at or above the shaft/column interface, thereby, containing the majority of inelastic action to the ductile column element. Type II shafts are usually enlarged pile shafts characterized by a reinforcing cage in the shaft that has a diameter larger than the column it supports. Type II pile shafts shall be designed to remain elastic, $\mu_D \leq 1$. See Section 7.7.3.2 for design requirements for Type II pile shafts.

**Figure 2.4 Pile Shaft Definitions**

NOTE: Generally, the use of Type II Pile Shafts should be discussed and approved at the Type Selection Meeting. Type II Pile Shafts will increase the foundation costs, compared to Type I Pile Shafts, however there is an advantage of improved post-earthquake inspection and repair. Typically, Type I shaft is appropriate for short columns, while Type II shaft is used in conjunction with taller columns. The end result shall be a structure with an appropriate fundamental period, as discussed elsewhere.

## 2.3 Force Demand

The structure shall be designed to resist the internal forces generated when the structure reaches its Collapse Limit State. The Collapse Limit State is defined as the condition when a sufficient number of plastic hinges have formed within the structure to create a local or global collapse mechanism.

### 2.3.1 Moment Demand

The column design moments shall be determined by the idealized plastic capacity of the column's cross section, $M_p^{col}$ defined in Section 3.3. The overstrength moment $M_o^{col}$ defined in Section 4.3.1, the associated shear $V_o^{col}$ defined in Section 2.3.2, and the moment distribution characteristics of the structural system shall determine the design moments for the capacity protected components adjacent to the column.

### 2.3.2 Shear Demand

#### *2.3.2.1 Column Shear Demand*

The column shear demand and the shear demand transferred to adjacent components shall be the shear force $V_o^{col}$ associated with the overstrength column moment $M_o^{col}$. The designer shall consider all potential plastic hinge locations to insure the maximum possible shear demand has been determined.

#### *2.3.2.2 Pier Wall Shear Demand*

The shear demand for pier walls in the weak direction shall be calculated as described in Section 2.3.2.1. The shear demand for pier walls in the strong direction is dependent upon the boundary conditions of the pier wall. Pier walls with fixed-fixed end conditions shall be designed to resist the shear generated by the lesser of the unreduced elastic ARS demand or 130% of the ultimate shear capacity of the foundation (based on most probable geotechnical properties). Pier walls with fixed-pinned end conditions shall be designed for the least value of the unreduced elastic ARS demand or 130% of either the shear capacity of the pinned connection or the ultimate capacity of the foundation.

### 2.3.3 Shear Demand for Capacity Protected Members

The shear demand for essentially elastic capacity protected members shall be determined by the distribution of overstrength moments and associated shear when the frame or structure reaches its Collapse Limit State

# 3. CAPACITIES OF STRUCTURE COMPONENTS

## 3.1 Displacement Capacity of Ductile Concrete Members

### 3.1.1 Ductile Member Definition

A ductile member is defined as any member that is intentionally designed to deform inelastically for several cycles without significant degradation of strength or stiffness under the demands generated by the MCE.

### 3.1.2 Distinction Between Local Member Capacity and Global Structure System Capacity

Local member displacement capacity, $D_c$ is defined as a member's displacement capacity attributed to its elastic and plastic flexibility as defined in Section 3.1.3. The structural system's displacement capacity, $D_C$ is the reliable lateral capacity of the bridge or subsystem as it approaches its Collapse Limit State. Ductile members must meet the local displacement capacity requirements specified in Section 3.1.4.1 and the global displacement criteria specified in Section 4.1.1.

### 3.1.3 Local Member Displacement Capacity

The local displacement capacity of a member is based on its rotation capacity, which in turn is based on its curvature capacity. The curvature capacity shall be determined by $M$-$f$ analysis, see Section 3.3.1. The local displacement capacity $D_c$ of any column may be idealized as one or two cantilever segments presented in equations 3.1-3.5 and 3.1a-3.5a, respectively. See Figures 3.1 and 3.2 for details.

$$D_c = D_Y^{col} + D_p \tag{3.1}$$

$$D_Y^{col} = \frac{L^2}{3} \times f_Y \tag{3.2}$$

$$D_p = q_p \times \left( L - \frac{L_p}{2} \right) \tag{3.3}$$

$$q_p = L_p \times f_p \tag{3.4}$$

$$f_p = f_u - f_Y \tag{3.5}$$

$$D_{c1} = D_{Y1}^{col} + D_{p1} \quad , \quad D_{c2} = D_{Y2}^{col} + D_{p2} \tag{3.1a}$$

$$D_{Y1}^{col} = \frac{L_1^2}{3} \times f_{Y1} \quad , \; D_{Y2}^{col} = \frac{L_2^2}{3} \times f_{Y2} \tag{3.2a}$$

$$D_{p1} = q_{p1} \times \left( L_1 - \frac{L_{p1}}{2} \right) \quad , \quad D_{p2} = q_{p2} \times \left( L_2 - \frac{L_{p2}}{2} \right) \tag{3.3a}$$

$$q_{p1} = L_{p1} \times f_{p1} \quad , \quad q_{p2} = L_{p2} \times f_{p2} \tag{3.4a}$$

$$f_{p1} = f_{u1} - f_{Y1} \quad , \quad f_{p2} = f_{u2} - f_{Y2} \tag{3.5a}$$

Where:

| | | |
|---|---|---|
| $L$ | = | Distance from the point of maximum moment to the point of contra-flexure |
| $L_P$ | = | Equivalent analytical plastic hinge length as defined in Section 7.6.2 |
| $D_p$ | = | Idealized plastic displacement capacity due to rotation of the plastic hinge |
| $D_Y^{col}$ | = | The idealized yield displacement of the column at the formation of the plastic hinge |
| $f_Y$ | = | Idealized yield curvature defined by an elastic-perfectly-plastic representation of the cross section's *M-f* curve, see Figure 3.7 |
| $f_p$ | = | Idealized plastic curvature capacity (assumed constant over $L_p$) |
| $f_u$ | = | Curvature capacity at the Failure Limit State, defined as the concrete strain reaching $e_{cu}$ or the confinement reinforcing steel reaching the reduced ultimate strain $e_{su}^R$ |
| $q_p$ | = | Plastic rotation capacity |

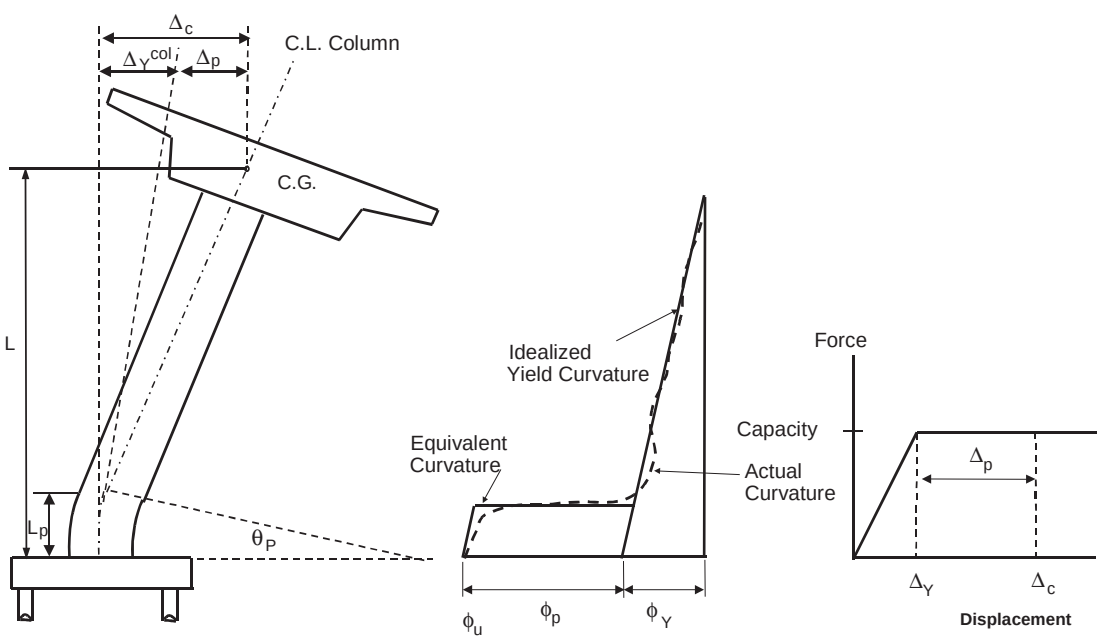


**Figure 3.1 Local Displacement Capacity - Cantilever Column w/ Fixed Base**

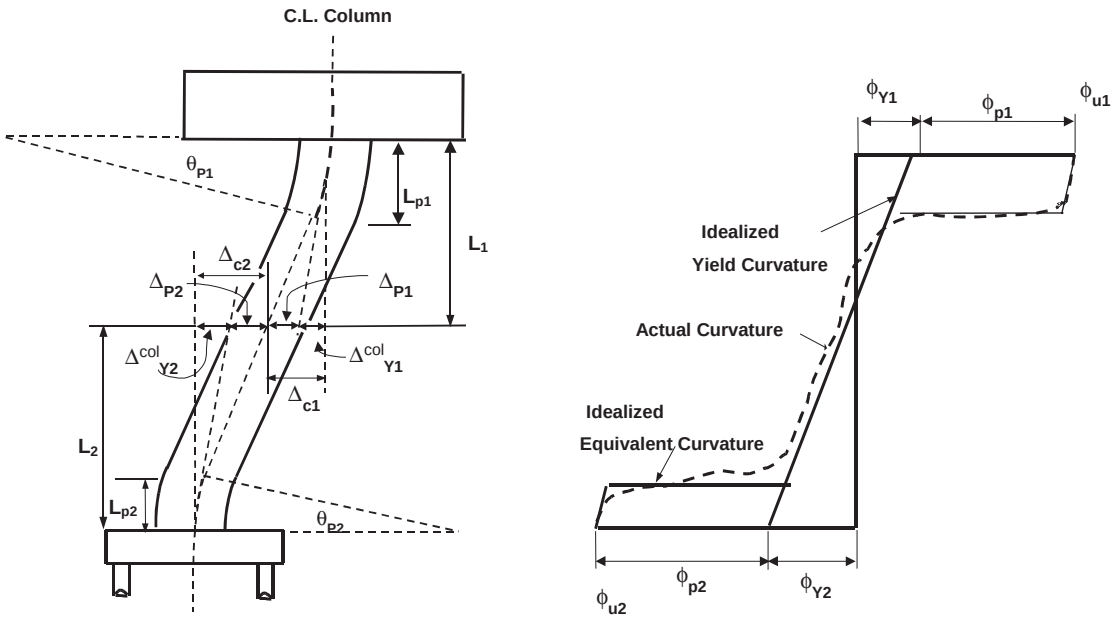


**Figure 3.2 Local Displacement Capacity - Framed Column, Assumed as Fixed-Fixed**

### 3.1.4 Local Member Displacement Ductility Capacity

Local displacement ductility capacity for a particular member is defined in equation 3.6.

$$m_c = \frac{D_c}{D_Y^{col}} \quad \text{for Cantilever columns,}$$

$$m_{c1} = \frac{D_{c1}}{D_{Y1}^{col}} \quad \& \quad m_{c2} = \frac{D_{c2}}{D_{Y2}^{col}} \text{ for fixed-fixed columns} \tag{3.6}$$

#### *3.1.4.1 Minimum Local Displacement Ductility Capacity*

Each ductile member shall have a minimum local displacement ductility capacity of $m_c = 3$ to ensure dependable rotational capacity in the plastic hinge regions regardless of the displacement demand imparted to that member. The local displacement ductility capacity shall be calculated for an equivalent member that approximates a fixed base cantilever element as defined in Figure 3.3.

The minimum displacement ductility capacity $m_c = 3$ may be difficult to achieve for columns and Type I pile shafts with large diameters $D_c > 10$ ft, (3m) or components with large L/D ratios. Local displacement ductility capacity less than 3 requires approval, see MTD 20-11 for the approval process.

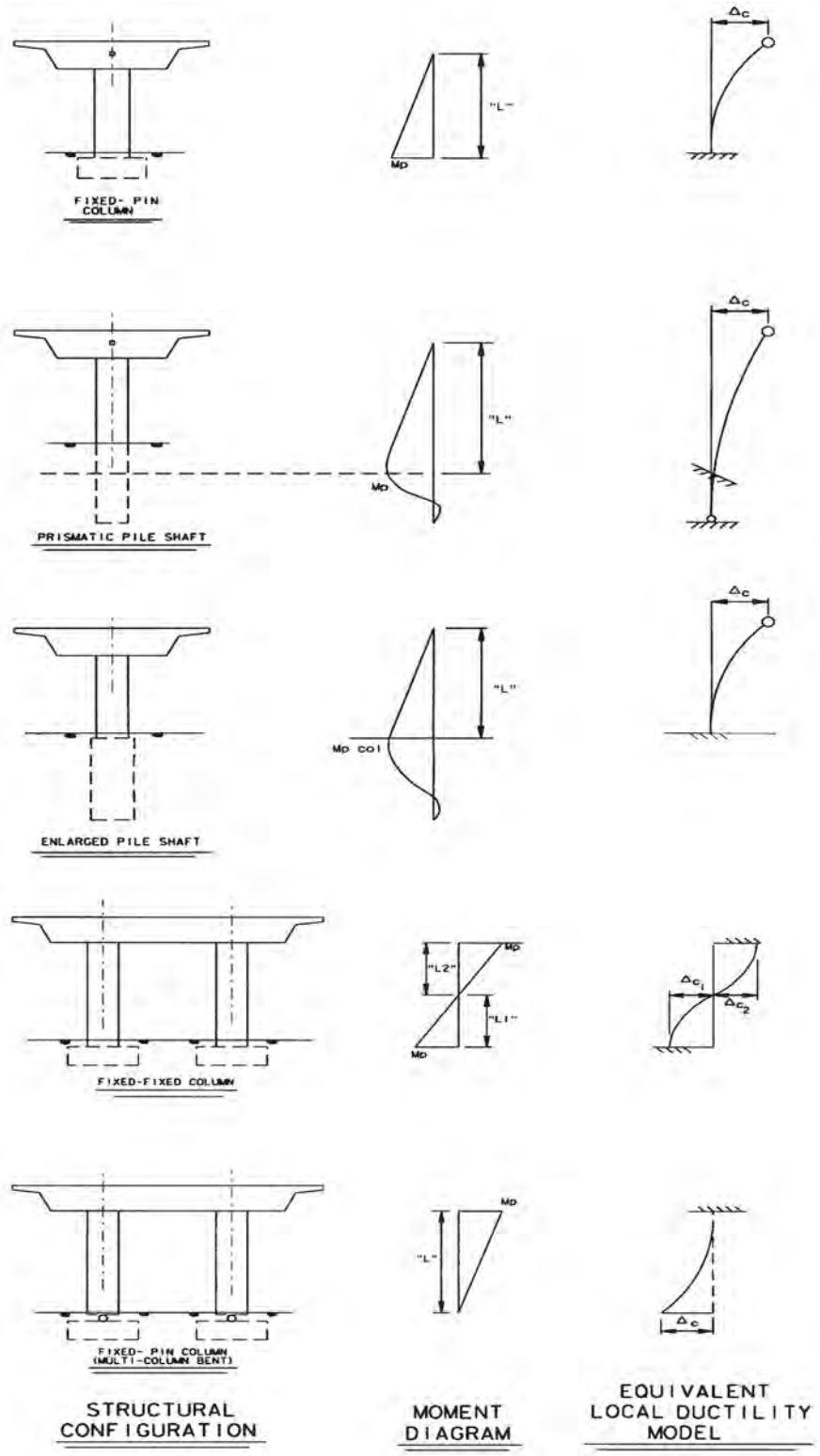


**Figure 3.3 Local Ductility Assessment**

## 3.2 Material Properties for Concrete Components

### 3.2.1 Expected Material Properties

The capacity of concrete components to resist all seismic demands, except shear, shall be based on most probable (expected) material properties to provide a more realistic estimate for design strength. An expected concrete compressive strength, $f'_{ce}$ recognizes the typically conservative nature of concrete batch design, and the expected strength gain with age. The yield stress $f_y$ for ASTM A706 steel can range between 60 ksi to 78 ksi. An expected reinforcement yield stress $f_{ye}$ is a "characteristic" strength and better represents the actual strength than the specified minimum of 60 ksi. The possibility that the yield stress may be less than $f_{ye}$ in ductile components will result in a reduced ratio of actual plastic moment strength to design strength, thus conservatively impacting capacity protected components. The possibility that the yield stress may be less than $f_{ye}$ in essentially elastic components is accounted for in the overstrength magnifier specified in Section 4.3.1. Expected material properties shall only be used to assess capacity for earthquake loads. The material properties for all other load cases shall comply with the Caltrans Bridge Design Specifications (BDS). Seismic shear capacity shall be conservatively based on the nominal material strengths defined in Section 3.6.1, not the expected material strengths.

### 3.2.2 Nonlinear Reinforcing Steel Models for Ductile Reinforced Concrete Members

Reinforcing steel shall be modeled with a stress-strain relationship that exhibits an initial linear elastic portion, a yield plateau, and a strain hardening range in which the stress increases with strain.

The yield point should be defined by the expected yield stress of the steel $f_{ye}$. The length of the yield plateau shall be a function of the steel strength and bar size. The strain-hardening curve can be modeled as a parabola or other non-linear relationship and should terminate at the ultimate tensile strain $e_{su}$. The ultimate strain should be set at the point where the stress begins to drop with increased strain as the bar approaches fracture. It is Caltrans' practice to reduce the ultimate strain by up to thirty-three percent to decrease the probability of fracture of the reinforcement. The commonly used steel model is shown in Figure 3.4 [4].

### 3.2.3 Reinforcing Steel A706/A706M (Grade 60/Grade 400)

For A706/A706M reinforcing steel, the following properties based on a limited number of monotonic pull tests conducted by Materials Engineering and Testing Services (METS) may be used. The designer may use actual test data if available.

| | | |
|---|---|---|
| Modulus of elasticity | $E_s = 29{,}000$ ksi | 200,000 MPa |
| Specified minimum yield strength | $f_y = 60$ ksi | 420 MPa |
| Expected yield strength | $f_{ye} = 68$ ksi | 475 MPa |
| Specified minimum tensile strength | $f_u = 80$ ksi | 550 MPa |
| Expected tensile strength | $f_{ue} = 95$ ksi | 655 MPa |
| Nominal yield strain | $e_y = 0.0021$ | |
| Expected yield strain | $e_{ye} = 0.0023$ | |

Ultimate tensile strain

$$e_{su} = \begin{cases} 0.120 & \text{\#10 (\#32m) bars and smaller} \\ 0.090 & \text{\#11 (\#36m) bars and larger} \end{cases}$$

Reduced ultimate tensile strain

$$e_{su}^{R} = \begin{cases} 0.090 & \text{\#10 (\#32m) bars and smaller} \\ 0.060 & \text{\#11 (\#36m) bars and larger} \end{cases}$$

Onset of strain hardening

$$e_{sh} = \begin{cases} 0.0150 & \text{\#8 (\#25m) bars} \\ 0.0125 & \text{\#9 (\#29m) bars} \\ 0.0115 & \text{\#10 \& \#11 (\#32m \& \#36m) bars} \\ 0.0075 & \text{\#14 (\#43m) bars} \\ 0.0050 & \text{\#18 (\#57m) bars} \end{cases}$$

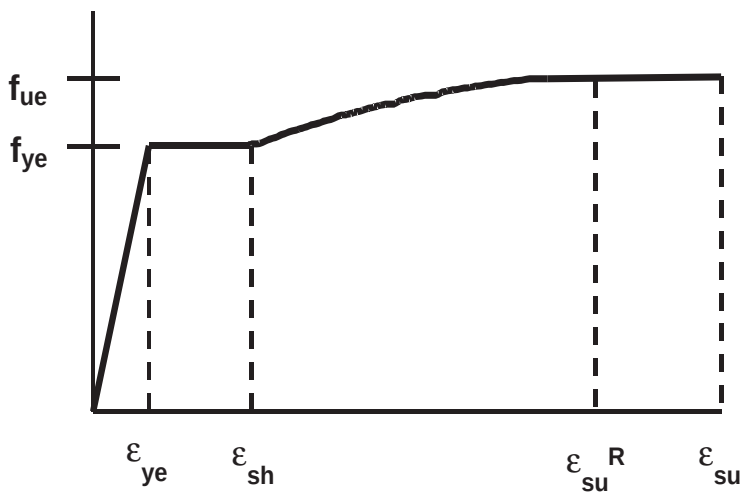


**Figure 3.4 Steel Stress Strain Model**

### 3.2.4 Nonlinear Prestressing Steel Model

Prestressing steel shall be modeled with an idealized nonlinear stress strain model. Figure 3.5 is an idealized stress-strain model for 7-wire low-relaxation prestressing strand. The curves in Figure 3.5 can be approximated by equations 3.7 – 3.10. See MTD 20-3 for the material properties pertaining to high strength rods (ASTM A722 Uncoated High-Strength Steel Bar for Prestressing Concrete). Consult the OSD Prestressed Concrete Committee for the stress-strain models of other prestressing steels.

Essentially elastic prestress steel strain

$$e_{ps,EE} = \begin{cases} 0.0076 & \text{for } f_u = 250 \text{ ksi} \quad (1725 \text{ MPa}) \\ 0.0086 & \text{for } f_u = 270 \text{ ksi} \quad (1860 \text{ MPa}) \end{cases}$$

Reduced ultimate prestress steel strain $e^{R}_{ps,u} = 0.03$

<u>250 ksi (1725 MPa) Strand:</u>

$$e_{ps} \le 0.0076 : f_{ps} = 28{,}500 \times e_{ps} \quad \text{(ksi)} \qquad f_{ps} = 196{,}500 \times e_{ps} \quad \text{(MPa)} \tag{3.7}$$

$$e_{ps} \ge 0.0076 : f_{ps} = 250 - \frac{0.25}{e_{ps}} \quad \text{(ksi)} \qquad f_{ps} = 1725 - \frac{1.72}{e_{ps}} \quad \text{(MPa)} \tag{3.8}$$

<u>270 ksi (1860 MPa) Strand:</u>

$$e_{ps} \le 0.0086 : f_{ps} = 28{,}500 \times e_{ps} \quad \text{(ksi)} \qquad f_{ps} = 196{,}500 \times e_{ps} \quad \text{(MPa)} \tag{3.9}$$

$$e_{ps} \ge 0.0086 : f_{ps} = 270 - \frac{0.04}{e_{ps} - 0.007} \quad \text{(ksi)} \qquad f_{ps} = 1860 - \frac{0.276}{e_{ps} - 0.007} \quad \text{(MPa)} \tag{3.10}$$

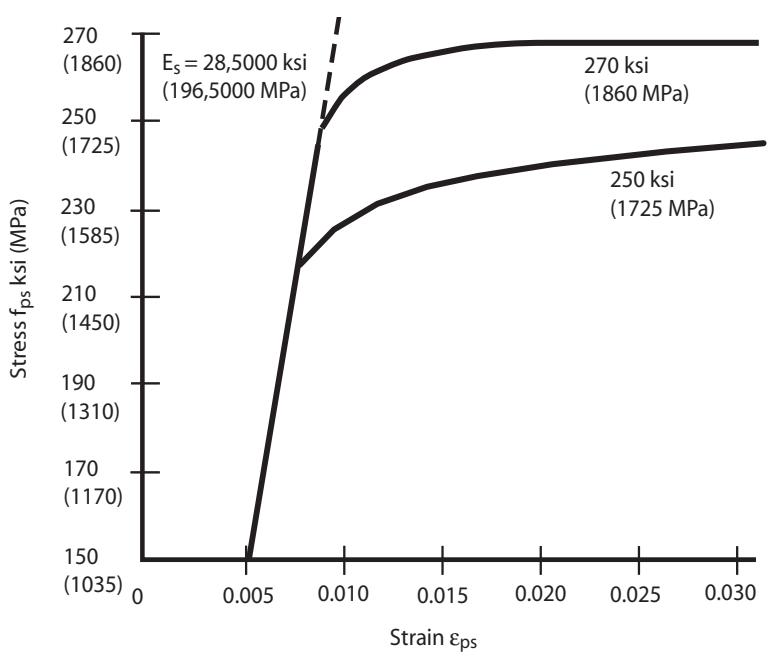


**Figure3.5 Prestressing Strand Stress Strain Model**

### 3.2.5 Nonlinear Concrete Models for Ductile Reinforced Concrete Members

A stress-strain model for confined and unconfined concrete shall be used in the analysis to determine the local capacity of ductile concrete members. The initial ascending curve may be represented by the same equation for both the confined and unconfined model since the confining steel has no effect in this range of strains. As the curve approaches the compressive strength of the unconfined concrete, the unconfined stress begins to fall to an unconfined strain level before rapidly degrading to zero at the spalling strain $e_{sp}$, typically $e_{sp} \approx 0.005$. The confined concrete model should continue to ascend until the confined compressive strength $f'_{cc}$ is reached. This segment should be followed by a descending curve dependent on the parameters of the confining steel. The ultimate strain $e_{cu}$ should be the point where strain energy equilibrium is reached between the concrete and the confinement steel. A commonly used model is Mander's stress strain model for confined concrete shown in Figure 3.6 [4].

### 3.2.6 Normal Weight Portland Cement Concrete Properties

Modulus of Elasticity $$E_c = 33 \times w^{1.5} \times \sqrt{f'_c} \quad \text{(psi)}, \quad E_c = 0.043 \times w^{1.5} \times \sqrt{f'_c} \quad \text{(MPa)} \tag{3.11}$$

Where $w$ = unit weight of concrete is in lb/ft$^3$ and kg/m$^3$, respectively. For $w$ = 143.96 lb/ft$^3$ and 2286.05 kg/m$^3$, Equation 3.11 results in the form presented in other Caltrans documents.

Shear Modulus $$G_c = \frac{E_c}{2 \times (1 + v_c)} \tag{3.12}$$

Poisson's Ratio $\nu_c = 0.2$

Expected concrete compressive strength the greater of: $$f'_{ce} = \begin{cases} 1.3 \times f'_c \\ \quad \text{or} \\ 5000 \text{ (psi)} \quad 34.5 \text{ (MPa)} \end{cases} \tag{3.13}$$

Unconfined concrete compressive strain at the maximum compressive stress $e_{c0} = 0.002$

Ultimate unconfined compression (spalling) strain $e_{sp} = 0.005$

Confined compressive strain $e_{cc} = *$

Ultimate compression strain for confined concrete $e_{cu} = *$

* Defined by the constitutive stress strain model for confined concrete, see Figure 3.6.

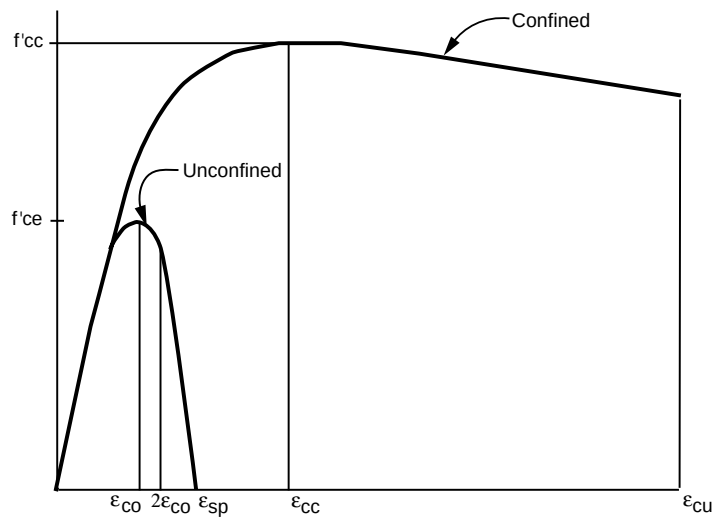


**Figure 3.6 Concrete Stress Strain Model**

### 3.2.7 Other Material Properties

Inelastic behavior shall be limited to pre-determined locations. If non-standard components are explicitly designed for ductile behavior, the bridge is classified as non-standard. The material properties and stress-strain relationships for non-standard components shall be included in the project specific design criteria.

## 3.3 Plastic Moment Capacity for Ductile Concrete Members

### 3.3.1 Moment Curvature ($M-f$) Analysis

The plastic moment capacity of all ductile concrete members shall be calculated by $M-f$ analysis based on expected material properties. Moment curvature analysis derives the curvatures associated with a range of moments for a cross section based on the principles of strain compatibility and equilibrium of forces. The $M-f$ curve can be idealized with an elastic perfectly plastic response to estimate the plastic moment capacity of a member's cross section. The elastic portion of the idealized curve should pass through the point marking the first reinforcing bar yield. The idealized plastic moment capacity is obtained by balancing the areas between the actual and the idealized $M-f$ curves beyond the first reinforcing bar yield point, see Figure 3.7 [4].

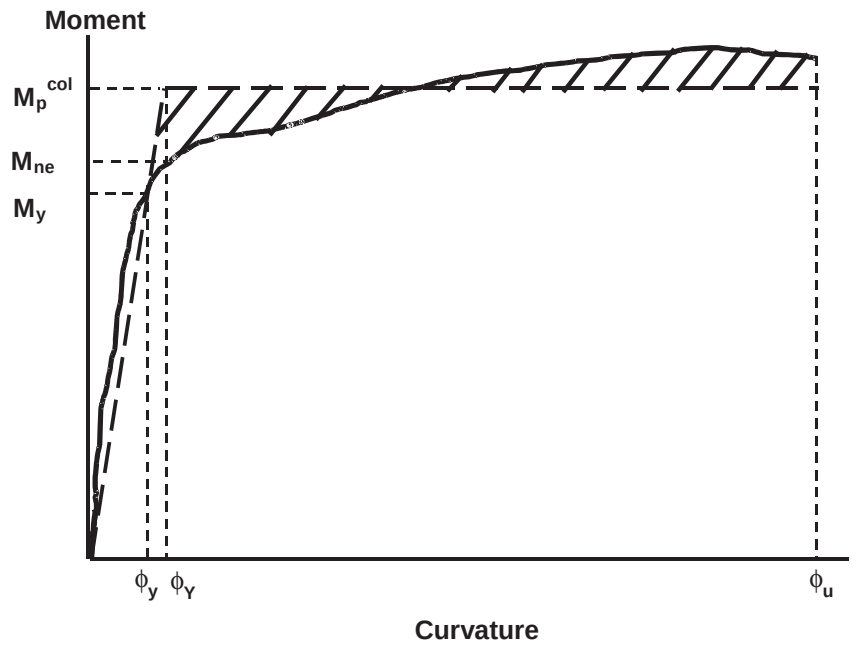


**Figure 3.7 Moment Curvature Curve**

## 3.4 Requirements for Capacity Protected Components

Capacity protected concrete components such as footings, Type II pile shafts, bent cap beams, joints, and superstructure shall be designed flexurally to remain essentially elastic when the column reaches its overstrength capacity. The expected nominal moment capacity $M_{ne}$ for capacity protected concrete components determined by either $M-f$ or strength design, is the minimum requirement for essentially elastic behavior. Due to cost considerations a factor of safety is not required. Expected material properties shall only be used to assess flexural component capacity for resisting earthquake loads. The material properties used for assessing all other load cases shall comply with the Caltrans design manuals.

Expected nominal moment capacity for capacity protected concrete components shall be based on the expected concrete and steel strengths when either the concrete strain reaches 0.003 or the reinforcing steel strain reaches $e_{su}^{R}$ as derived from the steel stress strain model.

## 3.5 Minimum Lateral Strength

Each column shall have a minimum lateral flexural capacity (based on expected material properties) to resist a lateral force of $0.1 \times P_{dl}$. Where $P_{dl}$ is the tributary dead load applied at the center of gravity of the superstructure.

## 3.6 Seismic Shear Design for Ductile Concrete Members

### 3.6.1 Nominal Shear Capacity

The seismic shear demand shall be based on the overstrength shear $V_o$ associated with the overstrength moment $M_o$ defined in Section 4.3. The shear capacity for ductile concrete members shall be conservatively based on the nominal material strengths.

$$fV_n \geq V_o \qquad f = 0.85 \tag{3.14}$$

$$V_n = V_c + V_s \tag{3.15}$$

### 3.6.2 Concrete Shear Capacity

The concrete shear capacity of members designed for ductility shall consider the effects of flexure and axial load as specified in equation 3.16 through 3.21.

$$V_c = v_c \times A_e \tag{3.16}$$

$$A_e = 0.8 \times A_g \tag{3.17}$$

- Inside the plastic hinge zone

$$v_c = \begin{cases} \text{Factor 1} \times \text{Factor 2} \times \sqrt{f_c'} \leq 4\sqrt{f_c'} & \text{(psi)} \\ \text{Factor 1} \times \text{Factor 2} \times \sqrt{f_c'} \leq 0.33\sqrt{f_c'} & \text{(MPa)} \end{cases} \tag{3.18}$$

- Outside the plastic hinge zone

$$v_c = \begin{cases} 3 \times \text{Factor 2} \times \sqrt{f_c'} \leq 4\sqrt{f_c'} & \text{(psi)} \\ 0.25 \times \text{Factor 2} \times \sqrt{f_c'} \leq 0.33\sqrt{f_c'} & \text{(MPa)} \end{cases} \tag{3.19}$$

$$\text{Factor 1} = \begin{cases} 0.3 \leq \dfrac{r_s f_{yh}}{0.150} + 3.67 - m_d < 3 & \text{(English Units)} \\ 0.025 \leq \dfrac{r_s f_{yh}}{12.5} + 0.305 - 0.083 m_d < 0.25 & \text{(Metric Units)} \end{cases} \tag{3.20}$$

$$\text{Factor 2} = \begin{cases} 1 + \dfrac{P_c}{2000 \times A_g} < 1.5 & \text{(English Units)} \\ 1 + \dfrac{P_c}{13.8 \times A_g} < 1.5 & \text{(Metric Units)} \end{cases} \tag{3.21}$$

For members whose net axial load is in tension, $v_c = 0$.

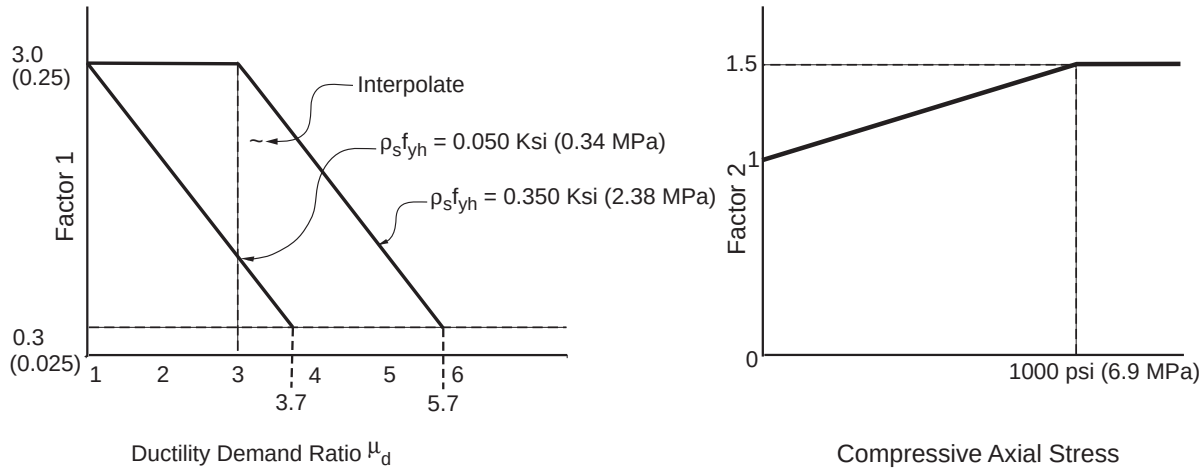


**Figure 3.8 Concrete Shear Factors**

The global displacement ductility demand $m_D$ shall be used in the determination of Factor 1 provided a significant portion of the global displacement is attributed to the deformation of the column or pier. In all other cases a local displacement ductility demand $m_d$ shall be used in Factor 1 of the shear equation.

### 3.6.3 Shear Reinforcement Capacity

For confined circular or interlocking core sections

$$V_s = \left( \frac{A_v \; f_{yh} \; D'}{s} \right), \qquad \text{where } A_v = n * \left( \frac{p}{2} \right) * A_b \tag{3.22}$$

n = number of individual interlocking spiral or hoop core sections.

For pier walls (in the weak direction)

$$V_s = \left( \frac{A_v \; f_{yh} \; D'}{s} \right) \tag{3.23}$$

$A_v$ = Total area of the shear reinforcement.

Alternative methods for assessing the shear capacity of members designed for ductility must be approved through the process outlined in MTD 20-11.

### 3.6.4 *Deleted*

### 3.6.5 Maximum and Minimum Shear Reinforcement Requirements for Columns

#### *3.6.5.1 Maximum Shear Reinforcement*

The shear strength $V_s$ provided by the reinforcing steel shall not be taken greater than:

$$8 \times \sqrt{f'_c} A_e \quad \text{(psi)} \qquad\qquad 0.67 \times \sqrt{f'_c} A_e \quad \left(\frac{\text{N}}{\text{mm}^2}\right) \tag{3.24}$$

#### *3.6.5.2 Minimum Shear Reinforcement*

The area of shear reinforcement provided in columns shall be greater than the area required by equation 3.25. The area of shear reinforcement for each individual core of columns confined by interlocking spirals or hoops shall be greater than the area required by equation 3.25.

$$A_v \geq 0.025 \times \frac{D's}{f_{yh}} \quad (\text{in}^2) \qquad A_v \geq 0.17 \times \frac{D's}{f_{yh}} \quad (\text{mm}^2) \tag{3.25}$$

#### *3.6.5.3 Minimum Vertical Reinforcement in Interlocking Portion*

The longitudinal rebars in the interlocking portion of the column shall have a maximum spacing of 8 inches and need not be anchored in the footing or the bent cap unless deemed necessary for the flexural capacity of the column. The longitudinal rebar size in the interlocking portion of the column shall be chosen correspondingly to the rebars outside the interlocking portion as follows:

| Size of rebars required inside the interlocking portion | Size of rebars used outside the interlocking portion |
|---|---|
| #6 | #10 |
| #8 | #11 |
| #9 | #14 |
| #11 | #18 |

### 3.6.6 Shear Capacity of Pier Walls

#### *3.6.6.1 Shear Capacity in the Weak Direction*

The shear capacity for pier walls in the weak direction shall be designed according to Section 3.6.2 & 3.6.3.

#### *3.6.6.2 Shear Capacity in the Strong Direction*

The shear capacity of pier walls in the strong direction shall resist the maximum shear demand specified in Section 2.3.2.2.

$$fV_n^{pw} > V_u^{pw}$$
$$f = 0.85 \tag{3.26}$$

Studies of squat shear walls have demonstrated that the large shear stresses associated with the moment capacity of the wall may lead to a sliding failure brought about by crushing of the concrete at the base of the wall. The thickness of pier walls shall be selected so the shear stress satisfies equation 3.27 [6].

$$\frac{V_n^{pw}}{0.8 \times A_g} < 8 \times \sqrt{f_c'} \quad \text{(psi)} \qquad \frac{V_n^{pw}}{0.8 \times A_g} < 0.67 \times \sqrt{f_c'} \quad \text{(MPa)} \tag{3.27}$$

### 3.6.7 Shear Capacity of Capacity Protected Members

The shear capacity of essentially elastic members shall be designed in accordance with BDS Section 8.16.6 using nominal material properties.

## 3.7 Maximum and Minimum Longitudinal Reinforcement

### 3.7.1 Maximum Longitudinal Reinforcement

The area of longitudinal reinforcement for compression members shall not exceed the value specified in equation 3.28.

$$0.04 \times A_g \tag{3.28}$$

### 3.7.2 Minimum Longitudinal Reinforcement

The minimum area of longitudinal reinforcement for compression members shall not be less than the value specified in equation 3.29 and 3.30.

$$0.01 \times A_g \quad \text{Columns} \tag{3.29}$$

$$0.005 \times A_g \quad \text{Pier Walls} \tag{3.30}$$

### 3.7.3 Maximum Reinforcement Ratio

The designer must ensure that members sized to remain essentially elastic (i.e. superstructure, bent caps, footings, enlarged pile shafts) retain a ductile failure mode. The reinforcement ratio, ρ shall meet the requirements in BDS Section 8.16.3 for reinforced concrete members and BDS Section 9.19 for prestressed concrete members.

## 3.8 Lateral Reinforcement of Ductile Members

### 3.8.1 Lateral Reinforcement Inside the Analytical Plastic Hinge Length

The volume of lateral reinforcement typically defined by the volumetric ratio, $r_s$ provided inside the plastic hinge length shall be sufficient to ensure the column or pier wall meets the performance requirements in Section 4.1. $r_s$ for columns with circular or interlocking core sections is defined by equation 3.31.

$$r_s = \frac{4A_b}{D's} \tag{3.31}$$

### 3.8.2 Lateral Column Reinforcement Inside the Plastic Hinge Region

The lateral reinforcement required inside the plastic hinge region shall meet the volumetric requirements specified in Section 3.8.1, the shear requirements specified in Section 3.6.3, and the spacing requirements in Section 8.2.5. The lateral reinforcement shall be either butt-welded hoops or continuous spiral.[3]

### 3.8.3 Lateral Column Reinforcement Outside the Plastic Hinge Region

The volume of lateral reinforcement required outside of the plastic hinge region, shall not be less than 50% of the amount specified in Section 3.8.2 and meet the shear requirements specified in Section 3.6.3.

### 3.8.4 Lateral Reinforcement of Pier Walls

The lateral confinement of pier walls shall be provided by cross ties. The total cross sectional tie area, $A_{sh}$ required inside the plastic end regions of pier walls shall be the larger of the volume of steel required in Section 3.8.2 or BDS Sections 8.18.2.3.2 through 8.18.2.3.4. The lateral pier wall reinforcement outside the plastic hinge region shall satisfy BDS Section 8.18.2.3.

### 3.8.5 Lateral Reinforcement Requirements for Columns Supported on Type II Pile Shafts

The volumetric ratio of lateral reinforcement for columns supported on Type II pile shafts shall meet the requirements specified in Section 3.8.1 and 3.8.2. If the Type II pile shaft is enlarged, at least 50% of the confinement reinforcement required at the base of the column shall extend over the entire embedded length of the column cage. The required length of embedment for the column cage into the shaft is specified in Section 8.2.4.

### 3.8.6 Lateral Confinement for Type II Pile Shafts

The minimum volumetric ratio of lateral confinement in the enlarged Type II shaft shall be 50% of the volumetric ratio required at the base of the column and shall extend along the shaft cage to the point of termination of the column cage.

If this results in lateral confinement spacing which violates minimum spacing requirements in the pile shaft, the bar size and spacing shall be increased proportionally. Beyond the termination of the column cage, the volumetric ratio of the Type II pile shaft lateral confinement shall not be less than half that of the upper pile shaft.

[3] The SDC development team has examined the longitudinal reinforcement buckling issue. The maximum spacing requirements in Section 8.2.5 should prevent the buckling of longitudinal reinforcement between adjacent layers of transverse reinforcement.

Under certain exceptions a Type II shaft may be designed by adding longitudinal reinforcement to a prismatic column/shaft cage below ground. Under such conditions, the volumetric ratio of lateral confinement in the top segment $4D_{c,max}$ of the shaft shall be at least 75% of the confinement reinforcement required at the base of the column.

If this results in lateral confinement spacing which violates minimum spacing requirements in the pile shaft, the bar size and spacing shall be increased proportionally. The confinement of the remainder of the shaft cage shall not be less than half that of the upper pile shaft.

# 4. DEMAND VS. CAPACITY

## 4.1 Performance Criteria

### 4.1.1 Global Displacement Criteria

Each bridge or frame shall satisfy equation 4.1. Where $\Delta_D$ is the displacement along the local principal axes of a ductile member generated by seismic deformations applied to the structural system as defined in Section 2.1.2.[4]

$$\Delta_D < \Delta_C \tag{4.1}$$

Where:

$\Delta_D$ Is the displacement generated from the global analysis, the stand-alone analysis, or the larger of the two if both types of analyses are necessary.

$\Delta_C$ The frame displacement when any plastic hinge reaches its ultimate capacity, see Figure 4.1.

### 4.1.2 Demand Ductility Criteria

The entire structural system as well as its individual subsystems shall meet the displacement ductility demand requirements in Section 2.2.4.

### 4.1.3 Capacity Ductility Criteria

All ductile members in a bridge shall satisfy the displacement ductility capacity requirements specified in Section 3.1.4.1.

[4] The SDC development team elected not to include an interaction relationship for the displacement demand/capacity ratios along the principal axes of ductile members. This decision was based on the inherent factor of safety provided elsewhere in our practice. This factor of safety is provided primarily by the limits placed on permissible column displacement ductility and ultimate material strains, as well as the reserve capacity observed in many of the Caltrans sponsored column tests. Currently test data is not available to conclusively assess the impact of bi-axial displacement demands and their effects on member capacity especially for columns with large cross sectional aspect ratios.

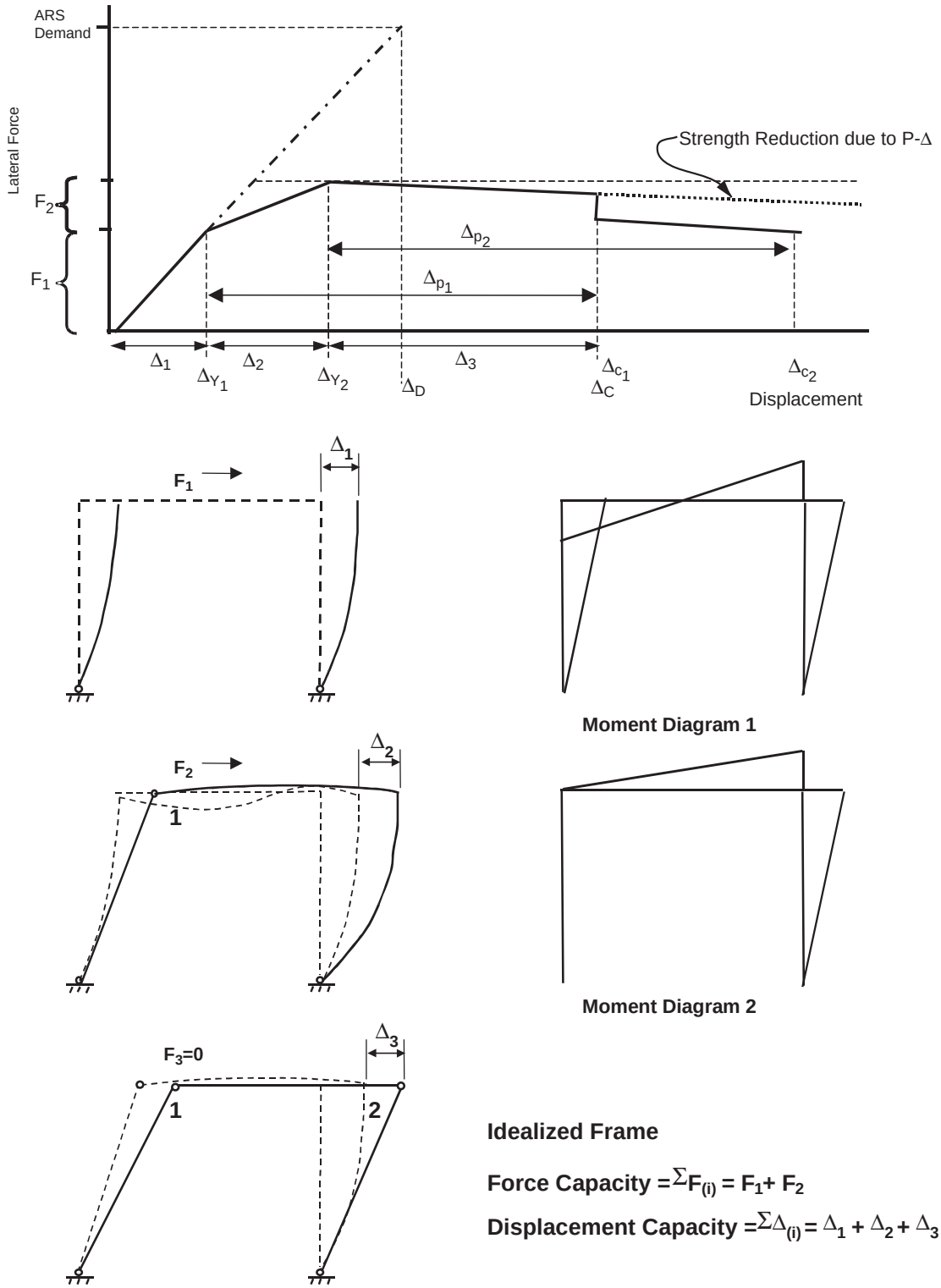


**Figure 4.1 Global Force Deflection Relationship [4], [7]**

## 4.2 P-Δ Effects

The dynamic effects of gravity loads acting through lateral displacements shall be included in the design. The magnitude of displacements associated with *P-Δ* effects can only be accurately captured with non-linear time history analysis. In lieu of such analysis, equation 4.3 can be used to establish a conservative limit for lateral displacements induced by axial load for columns meeting the ductility demand limits specified in Section 2.2.4. If equation 4.3 is satisfied, *P-Δ* effects can typically be ignored.[5] See Figure 4.2. [4]

$$P_{dl} \times \Delta_r \leq 0.20 \times M_p^{col} \tag{4.3}$$

Where:

$\Delta_r$ = The relative lateral offset between the point of contra-flexure and the base of the plastic hinge. For Type I pile shafts $\Delta_r = \Delta_D - \Delta_s$

$\Delta_s$ = The pile shaft displacement at the point of maximum moment

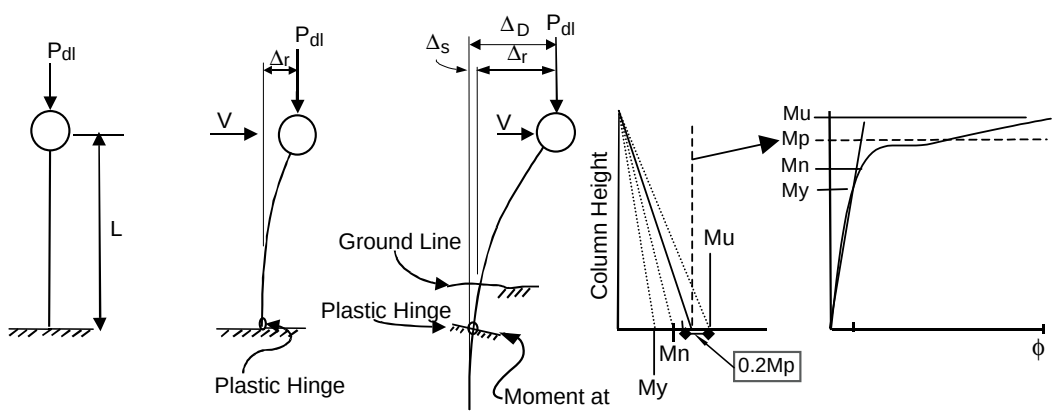


**Figure 4.2 P-Δ Effects on Bridge Columns [4]**

## 4.3 Component Overstrength Factors

### 4.3.1 Column Overstrength Factor

In order to determine force demands on essentially elastic members, a 20% overstrength magnifier shall be applied to the plastic moment capacity of a column to account for:

- Material strength variations between the column and adjacent members (e.g. superstructure, bent cap, footings, oversized pile shafts)
- Column moment capacities greater than the idealized plastic moment capacity

$$M_o^{col} = 1.2 \times M_p^{col} \tag{4.4}$$

[5] The moment demand at point of maximum moment in the shaft is shown in Figure 4.2. As the displacement of top of column is increased, moment demand values at the base pass through My, Mn, Mp, and Mu (key values defining the moment-curvature curve, see Figure 4.2). The idealized plastic moment Mp is always less than Mu in a well-confined column and 0.2Mp allowance for the P-Δ effects is justifiable, given the reserve moment capacities shown above.

### 4.3.2 Superstructure/Bent Cap Demand & Capacity

The nominal capacity of the superstructure longitudinally and of the bent cap transversely must be sufficient to ensure the columns have moved well beyond their elastic limit prior to the superstructure or bent cap reaching its expected nominal strength $M_{ne}$. Longitudinally, the superstructure capacity shall be greater than the demand distributed to the superstructure on each side of the column by the largest combination of dead load moment, secondary prestress moment, and column earthquake moment. The strength of the superstructure shall not be considered effective on the side of the column adjacent to a hinge seat. Transversely, similar requirements are required in the bent cap.

Any moment demand caused by dead load or secondary prestress effects shall be distributed to the entire frame. The distribution factors shall be based on cracked sectional properties. The column earthquake moment represents the amount of moment induced by an earthquake, when coupled with the existing column dead load moment and column secondary prestress moment, will equal the column's overstrength capacity, see Figure 4.3. Consequently, the column earthquake moment is distributed to the adjacent superstructure spans.

$$M_{ne}^{\sup(R)} \geq \sum M_{dl}^{R} + M_{p/s}^{R} + M_{eq}^{R} \tag{4.5}$$

$$M_{ne}^{\sup(L)} \geq \sum M_{dl}^{L} + M_{p/s}^{L} + M_{eq}^{L} \tag{4.6}$$

$$M_{o}^{col} = M_{dl}^{col} + M_{p/s}^{col} + M_{eq}^{col} \tag{4.7}$$

$$M_{eq}^{R} + M_{eq}^{L} + M_{eq}^{col} + \left(V_{o}^{col} \times D_{c.g.}\right) = 0 \tag{4.8}$$

Where:

| | | |
|---|---|---|
| $M_{ne}^{\sup R,L}$ | = | Expected nominal moment capacity of the adjacent left or right superstructure span |
| $M_{dl}$ | = | Dead load plus added dead load moment (unfactored) |
| $M_{p/s}$ | = | Secondary effective prestress moment (after losses have occurred) |
| $M_{eq}^{col}$ | = | The column moment when coupled with any existing dead load and/or secondary prestress moment will equal the column's overstrength moment capacity |
| $M_{eq}^{R,L}$ | = | The portion of $M_{eq}^{col}$ and $V_{o}^{col} \times D_{c.g.}$ (moment induced by the overstrength shear) distributed to the left or right adjacent superstructure span |

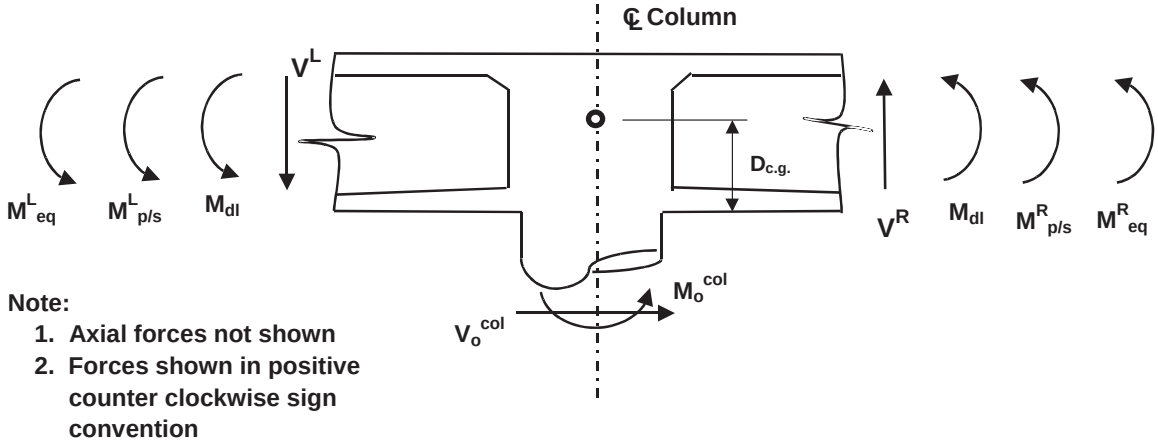


**Figure 4.3 Superstructure Demand Generated by Column Overstrength Moment**

### *4.3.2.1 Longitudinal Superstructure Capacity*

Reinforcement can be added to the deck, $A_s$ and/or soffit $A_s'$ to increase the moment capacity of the superstructure, see Figure 4.4. The effective width of the superstructure increases and the moment demand decreases with distance from the bent cap, see Section 7.2.1.1. The reinforcement should be terminated after it has been developed beyond the point where the capacity of the superstructure, $M_{ne}^{sup}$ exceeds the moment demand without the additional reinforcement.

### *4.3.2.2 Bent Cap Capacity*

The effective width for calculating bent cap capacity is defined in section 7.3.1.1. Bent cap reinforcement required for overstrength must be developed beyond the column cap joint. Cutting off bent cap reinforcement is discouraged because small changes in the plastic hinge capacity may translate into large changes in the moment distribution along the cap due to steep moment gradients

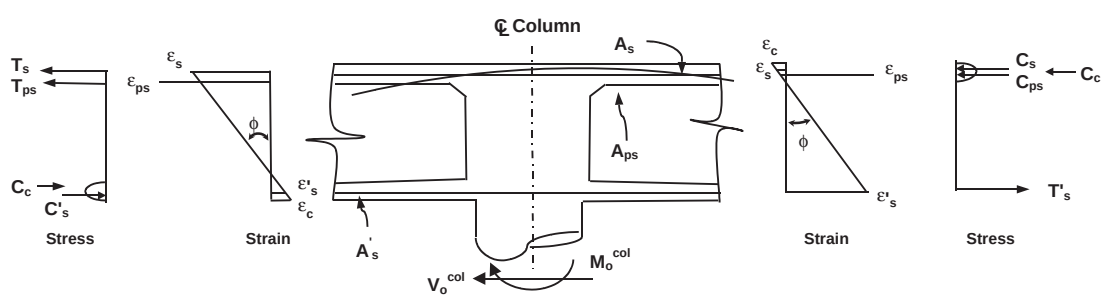


**Figure 4.4 Capacity Provided by Superstructure Internal Resultant Force Couple**

### 4.3.3 Foundation Capacity

The foundation must have sufficient strength to ensure the column has moved well beyond its elastic capacity prior to the foundation reaching its expected nominal capacity, refer to Section 6.2 for additional information on foundation performance.

# 5. ANALYSIS

## 5.1 Analysis Requirements

### 5.1.1 Analysis Objective

The objective of seismic analysis is to assess the force and deformation demands and capacities on the structural system and its individual components. Equivalent static analysis and linear elastic dynamic analysis are the appropriate analytical tools for estimating the displacement demands for Ordinary Standard bridges. Inelastic static analysis is the appropriate analytical tool to establishing the displacement capacities for Ordinary Standard bridges.

## 5.2 Analytical Methods

### 5.2.1 Equivalent Static Analysis (ESA)

ESA can be used to estimate displacement demands for structures where a more sophisticated dynamic analysis will not provide additional insight into behavior. ESA is best suited for structures or individual frames with well balanced spans and uniformly distributed stiffness where the response can be captured by a predominant translational mode of vibration.

The seismic load shall be assumed as an equivalent static horizontal force applied to individual frames. The total applied force shall be equal to the product of the ARS and the tributary weight. The horizontal force shall be applied at the vertical center of mass of the superstructure and distributed horizontally in proportion to the mass distribution.

### 5.2.2 Elastic Dynamic Analysis (EDA)

EDA shall be used to estimate the displacement demands for structures where ESA does not provide an adequate level of sophistication to estimate the dynamic behavior. A linear elastic multi-modal spectral analysis utilizing the appropriate response spectrum shall be performed. The number of degrees of freedom and the number of modes considered in the analysis shall be sufficient to capture at least 90% mass participation in the longitudinal and transverse directions. A minimum of three elements per column and four elements per span shall be used in the linear elastic model.

EDA based on design spectral accelerations will likely produce stresses in some elements that exceed their elastic limit. The presence of such stresses indicates nonlinear behavior. The engineer should recognize that forces generated by linear elastic analysis could vary considerable from the actual force demands on the structure.

Sources of nonlinear response that are not captured by EDA include the effects of the surrounding soil, yielding of structural components, opening and closing of expansion joints, and nonlinear restrainer and abutment behavior. EDA modal results shall be combined using the complete quadratic combination (CQC) method.

Multi-frame analysis shall include a minimum of two boundary frames or one frame and an abutment beyond the frame under consideration. See Figure 5.1.

### 5.2.3 Inelastic Static Analysis (ISA)

ISA, commonly referred to as "push over" analysis, shall be used to determine the reliable displacement capacities of a structure or frame as it reaches its limit of structural stability. ISA shall be performed using expected material properties of modeled members. ISA is an incremental linear analysis, which captures the overall nonlinear behavior of the elements, including soil effects, by pushing them laterally to initiate plastic action. Each increment pushes the frame laterally, through all possible stages, until the potential collapse mechanism is achieved. Because the analytical model accounts for the redistribution of internal actions as components respond inelastically, ISA is expected to provide a more realistic measure of behavior than can be obtained from elastic analysis procedures.

## 5.3 Structural System "Global" Analysis

Structural system or global analysis is required when it is necessary to capture the response of the entire bridge system. Bridge systems with irregular geometry, in particular curved bridges and skew bridges, multiple transverse expansion joints, massive substructures components, and foundations supported by soft soil can exhibit dynamic response characteristics that are not necessarily obvious and may not be captured in a separate subsystem analysis [7].

Two global dynamic analyses are normally required to capture the assumed nonlinear response of a bridge because it possesses different characteristics in tension versus compression [3].

In the tension model, the superstructure joints including the abutments are released longitudinally with truss elements connecting the joints to capture the effects of the restrainers. In the compression model, all of the truss (restrainer) elements are inactivated and the superstructure elements are locked longitudinally to capture structural response modes where the joints close up, mobilizing the abutments when applicable.

The structure's geometry will dictate if both a tension model and a compression model are required. Structures with appreciable superstructure curvature may require additional models, which combine the characteristics identified for the tension and compression models.

Long multi-frame bridges shall be analyzed with multiple elastic models. A single multi-frame model may not be realistic since it cannot account for out-of-phase movement among the frames and may not have enough nodes to capture all of the significant dynamic modes.

Each multi-frame model should be limited to five frames plus a boundary frame or abutment on each end of the model. Adjacent models shall overlap each other by at least one useable frame, see Figure 5.1.

The boundary frames provide some continuity between adjacent models but are considered redundant and their analytical results are ignored. A massless spring should be attached to the dead end of the boundary frames to represent the stiffness of the remaining structure. Engineering judgement should be exercised when interpreting the deformation results among various sets of frames since the boundary frame method does not fully account for the continuity of the structure [3].

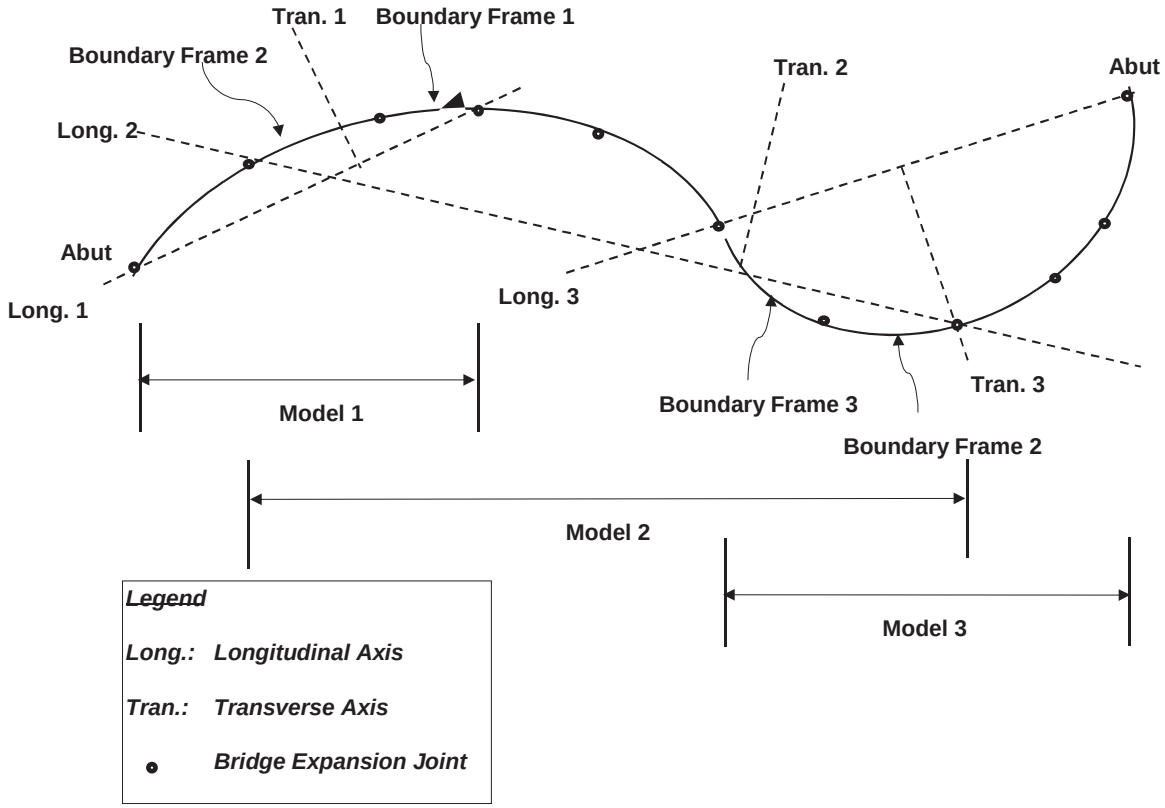


**Figure 5.1 EDA Modeling Techniques**

## 5.4 Stand-Alone "Local" Analysis

Stand-alone analysis quantifies the strength and ductility capacity of an individual frame, bent, or column. Stand-alone analysis shall be performed in both the transverse and longitudinal directions. Each frame shall meet all SDC requirements in the stand-alone condition.

### 5.4.1 Transverse Stand-Alone Analysis

Transverse stand-alone frame models shall assume lumped mass at the columns. Hinge spans shall be modeled as rigid elements with half of their mass lumped at the adjacent column, see Figure 5.2. The transverse analysis of end frames shall include a realistic estimate of the abutment stiffness consistent with the abutment's expected performance. The transverse displacement demand at each bent in a frame shall include the effects of rigid body rotation around the frame's center of rigidity.

### 5.4.2 Longitudinal Stand-Alone Analysis

Longitudinal stand-alone frame models shall include the short side of hinges with a concentrated dead load, and the entire long side of hinges supported by rollers at their ends, see Figure 5.2. Typically the abutment stiffness is ignored in the stand-alone longitudinal model for structures with more than two frames, an overall length greater than 300 feet (90 m) or significant in plane curvature since the controlling displacement occurs when the frame is moving away from the abutment. A realistic estimate of the abutment stiffness may be incorporated into the stand-alone analysis for single frame tangent bridges and two frame tangent bridges less than 300 feet (90 m) in length.

## 5.5 Simplified Analysis

The two-dimensional plane frame "push over" analysis of a bent or frame can be simplified to a column model (fixed-fixed or fixed-pinned) if it does not cause a significant loss in accuracy in estimating the displacement demands or the displacement capacities. The effect of overturning on the column axial load and associated member capacities must be considered in the simplified model. Simplifying the demand and capacity models is not permitted if the structure does not meet the stiffness and period requirements in Sections 7.1.1 and 7.1.2.

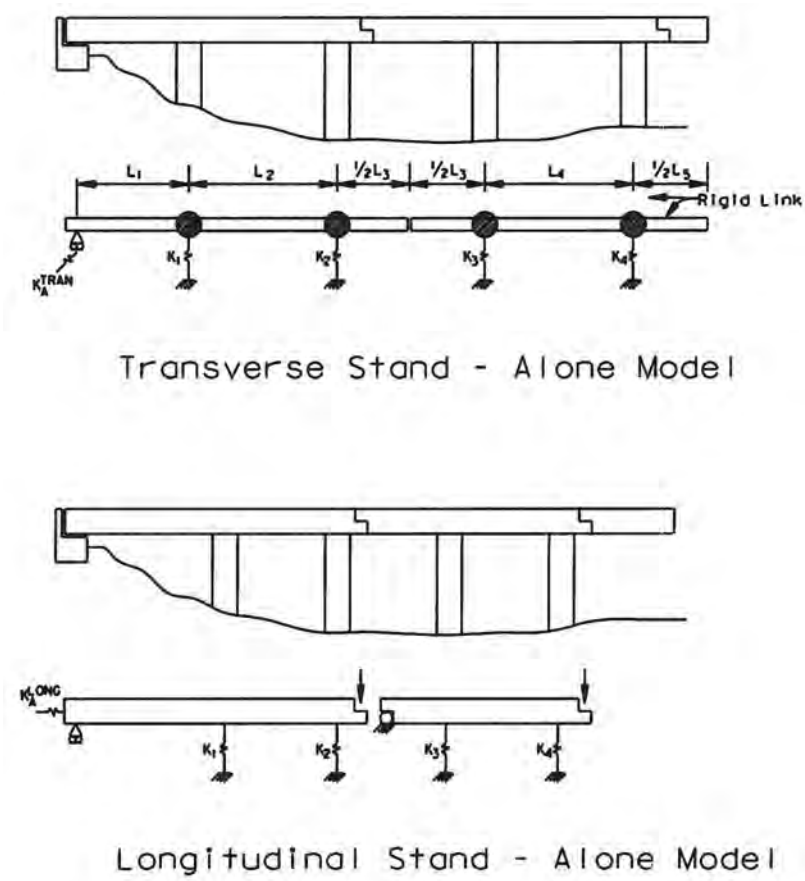


**Figure 5.2 Stand-Alone Analysis**

## 5.6 Effective Section Properties

### 5.6.1 Effective Section Properties for Seismic Analysis

Elastic analysis assumes a linear relationship between stiffness and strength. Concrete members display nonlinear response before reaching their idealized Yield Limit State.

Section properties, flexural rigidity $E_c I$ and torsional rigidity $G_c J$, shall reflect the cracking that occurs before the yield limit state is reached. The effective moments of inertia, $I_{eff}$ and $J_{eff}$ shall be used to obtain realistic values for the structure's period and the seismic demands generated from ESA and EDA analyses.

.

#### *5.6.1.1 $I_{eff}$ for Ductile Members*

The cracked flexural stiffness $I_{eff}$ should be used when modeling ductile elements. $I_{eff}$ can be estimated by Figure 5.3 or the initial slope of the $M$-$\phi$ curve between the origin and the point designating the first reinforcing bar yield as defined by equation 5.1

.

$$E_c \times I_{eff} = \frac{M_y}{\phi_y} \tag{5.1}$$

$M_y$ = Moment capacity of the section at first yield of the reinforcing steel.

#### *5.6.1.2* $I_{eff}$ *for Box Girder Superstructures*

$I_{eff}$ in box girder superstructures is dependent on the extent of cracking and the effect of the cracking on the element's stiffness.

$I_{eff}$ for reinforced concrete box girder sections can be estimated between $0.5I_g - 0.75I_g$. The lower bound represents lightly reinforced sections and the upper bound represents heavily reinforced sections.

The location of the prestressing steel's centroid and the direction of bending have a significant impact on how cracking affects the stiffness of prestressed members. Multi-modal elastic analysis is incapable of capturing the variations in stiffness caused by moment reversal. Therefore, no stiffness reduction is recommended for prestressed concrete box girder sections.

#### *5.6.1.3 $I_{eff}$ for Other Superstructure Types*

Reductions to $I_g$ similar to those specified for box girders can be used for other superstructure types and cap beams. A more refined estimate of $I_{eff}$ based on $M$-$\phi$ analysis may be warranted for lightly reinforced girders and precast elements.

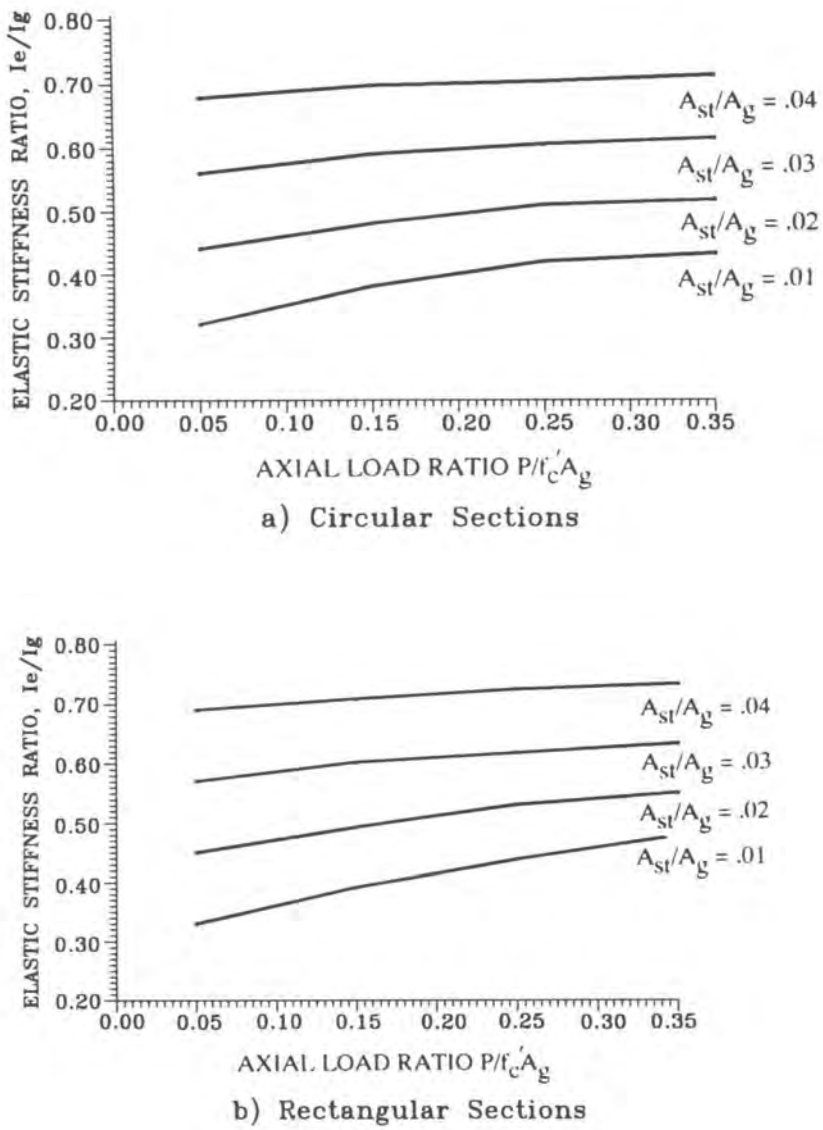


**Figure 5.3 Effective Stiffness of Cracked Reinforced Concrete Sections [7]**

### 5.6.2 Effective Torsional Moment of Inertia

A reduction of the torsional moment of inertia is not required for bridge superstructures that meet the Ordinary Bridge requirements in Section 1.1 and do not have a high degree of in-plane curvature [7].

The torsional stiffness of concrete members can be greatly reduced after the onset of cracking. The torsional moment of inertia for columns shall be reduced according to equation 5.2.

$$J_{eff} = 0.2 \times J_g \tag{5.2}$$

## 5.7 Effective Member Properties for Non-Seismic Loading

Temperature and shortening loads calculated with gross section properties may control the column size and strength capacity often penalizing seismic performance. If this is the case, the temperature or shortening forces should be recalculated based on the effective moment of inertia for the columns.

# 6. SEISMICITY AND FOUNDATION PERFORMANCE

## 6.1 Site Assessment

### 6.1.1 Seismicity and Foundation Data

The geotechnical engineer shall provide the following geotechnical data. See MTD 1-35 for information on requesting foundation data.

- Seismicity
  - Fault distance
  - Earthquake magnitude
  - Peak rock acceleration
  - Soil profile type
- Liquefaction potential
- Foundation stiffness or the soil parameters necessary for determining the force deformation characteristics of the foundation (when required)

### 6.1.2 ARS Curves

The geotechnical engineer will assess each bridge site and will recommend one of the following, a standard 5% damped SDC ARS curve, a modified SDC ARS curve, or a site-specific ARS curve. The final seismic design recommendations shall be included in the Final Foundation Report.

#### *6.1.2.1 Standard ARS Curves*

For preliminary design, prior to receiving the geotechnical engineer's recommendation, a standard SDC ARS curve may be used in conjunction with the peak rock acceleration from the 1996 Caltrans Seismic Hazard Map. The standard SDC ARS curves are contained in Appendix B. If standard SDC ARS curves are used during preliminary design, they should be adjusted for long period bridges and bridges in close proximity to a fault as described below.

For preliminary design of structures within 10 miles (15 km) of an active fault, the spectral acceleration on the SDC ARS curves shall be magnified as follows:

- Spectral acceleration magnification is not required for $T \leq 0.5$ seconds
- Increase the spectral accelerations for $T \geq 1.0$ seconds by 20%
- Spectral accelerations for $0.5 \leq T \leq 1.0$ shall be determined by linear interpolation

For preliminary design of structures with a fundamental period of vibration $T \geq 1.5$ seconds on deep soil sites (depth of alluvium ≥ 250 feet {75 m}) the spectral ordinates of the standard ARS curve should be magnified as follows:

- Spectral acceleration magnification is not required for $T \leq 0.5$ seconds
- Increase the spectral accelerations for $T \geq 1.5$ seconds by 20%
- Spectral accelerations for $0.5 \leq T \leq 1.5$ shall be determined by linear interpolation

#### *6.1.2.2 Site Specific ARS Curves*

Geotechnical Services (GS) will determine if a site-specific ARS curve is required. A site specific response spectrum is typically required when a bridge is located in the vicinity of a major fault or located on soft or liquefiable soil and the estimated earthquake moment magnitude $M_m > 6.5$.

The rock motion and soil profile can vary significantly along the length of long bridges. Consult with GS on bridges exceeding 1000 feet (300 m) in length to assess the probability of non-synchronous ground motion and the impact of different subsurface profiles along the length of the bridge.

The use of free field ground surface response spectra may not be appropriate for structures with stiff pile foundations in soft soil or deep pileshafts in soft soil extending into bedrock. Special analysis is required because of soil-pile kinematic interaction and shall be addressed by the geotechnical engineer on a job specific basis.

## 6.2 Foundation Design

### 6.2.1 Foundation Performance

- Bridge foundations shall be designed to respond to seismic loading in accordance with the seismic performance objectives outlined in MTD 20-1
- The capacity of the foundations and their individual components to resist MCE seismic demands shall be based on ultimate structural and soil capacities

### 6.2.2 Soil Classification[6]

The soil surrounding and supporting a foundation combined with the structural components (i.e. piles, footings, pile caps & drilled shafts) and the seismic input loading determines the dynamic response of the foundation subsystem. Typically, the soil response has a significant effect on the overall foundation response. Therefore, we can characterize

[6] Section 6.2 contains interim recommendations. The Caltrans' foundation design policy is currently under review. Previous practice essentially divided soil into two classifications based on standard penetration. Lateral foundation design was required in soft soil defined by N ≤ 10. The SDC includes three soil classifications: competent, marginal, and poor. The marginal classification recognizes that it is more difficult to assess intermediate soils, and their impact on dynamic response, compared to the soils on the extreme ends of the soil spectrum (i.e. very soft or very firm).

The SDC development team recognizes that predicting the soil and foundation response with a few selected geotechnical parameters is simplistic and may not adequately capture soil-structure interaction (SSI) in all situations. The designer must exercise engineering judgement when assessing the impact of marginal soils on the overall dynamic response of a bridge, and should consult with Geotechnical Services and Structure Design senior staff if they do not have the experience and/or the information required to make the determination themselves.

the foundation subsystem response based on the quality of the surrounding soil. Soil can be classified as competent, poor, or marginal as described in Section 6.2.3 (A), (B), & (C). Contact the Project Geologist/Geotechnical Engineer if it is uncertain which soil classification pertains to a particular bridge site.

### 6.2.2(A) Competent Soil

Foundations surrounded by competent soil are capable of resisting MCE level forces while experiencing small deformations. This type of performance characterizes a stiff foundation subsystem that usually has an insignificant impact on the overall dynamic response of the bridge and is typically ignored in the demand and capacity assessment. Foundations in competent soil can be analyzed and designed using a simple model that is based on assumptions consistent with observed response of similar foundations during past earthquakes. Good indicators that a soil is capable of producing competent foundation performance include the following:

- Standard penetration, upper layer (0-10 ft, 0-3 m) $N = 20$ (Granular soils)
- Standard penetration, lower layer (10-30 ft, 3-9 m) $N = 30$ (Granular soils)
- Undrained shear strength, $s_u > 1500$ psf (72 KPa) (Cohesive soils)
- Shear wave velocity, $v_s > 600$ ft/sec (180 m/sec)
- Low potential for liquefaction, lateral spreading, or scour

$N$ = The uncorrected blow count from the Standard Test Method for Penetration Test and Split- Barrel Sampling of Soil

### 6.2.2(B) Poor Soil

Poor soil has traditionally been characterized as having a standard penetration, N<10. The presence of poor soil classifies a bridge as non-standard, thereby requiring project-specific design criteria that address soil structure interaction (SSI) related phenomena. SSI mechanisms that should be addressed in the project criteria include earth pressure generated by lateral ground displacement, dynamic settlement, and the effect of foundation flexibility on the response of the entire bridge. The assumptions that simplify the assessment of foundation performance in competent soil cannot be applied to poor soil because the lateral and vertical force-deformation response of the soil has a significant effect on the foundation response and subsequently on the overall response of the bridge.

### 6.2.2(C) Marginal Soil

Marginal defines the range on soil that cannot readily be classified as either competent or poor. The course of action for bridges in marginal soil will be determined on a project-by-project basis. If a soil is classified as marginal, the bridge engineer and foundation designer shall jointly select the appropriate foundation type, determine the impact of SSI, and determine the analytical sophistication required to reasonably capture the dynamic response of the foundation as well as the overall dynamic response of the bridge.

### 6.2.3 Foundation Design Criteria

#### *6.2.3.1 Foundation Strength*

All foundations shall be designed to resist the plastic hinging overstrength capacity of the column or pier wall, $M_o$ defined in Section 4.3.1 and the associated plastic shear $V_o$.[7] See Section 7.7 for additional foundation design guidelines.

#### *6.2.3.2 Foundation Flexibility*

The demand and capacity analyses shall incorporate the expected foundation stiffness if the bridge is sensitive to variations in rotational, vertical, or lateral stiffness.

[7] An exception is permitted for pile cap and spread footing foundations in competent soil, where the foundation may be designed for $M_p$ in lieu of $M_o$. Designing for a smaller column capacity is justified because of additional capacity inherent to these types of foundation systems that is not typically included in the foundation capacity assessment.

# 7. DESIGN

## 7.1 Frame Design

The best way to increase a structure's likelihood of responding to seismic attack in its fundamental mode of vibration is to balance its stiffness and mass distribution. Irregularities in geometry increase the likelihood of complex nonlinear response that cannot be accurately predicted by elastic modeling or plane frame inelastic static modeling.

### 7.1.1 Balanced Stiffness

It is strongly recommended that the ratio of effective stiffness between any two bents within a frame or between any two columns within a bent satisfy equation 7.1. It is strongly recommended that the ratio of effective stiffness between adjacent bents within a frame or between adjacent columns within a bent satisfy equation 7.2. An increase in superstructure mass along the length of the frame should be accompanied by a reasonable increase in column stiffness. For variable width frames the tributary mass supported by each bent or column shall be included in the stiffness comparisons as specified by equation 7.1(b) and 7.2(b). The simplified analytical technique for calculating frame capacity described in Section 5.5 is only permitted if either 7.1(a) & 7.2(a) or 7.1(b) & 7.1(b) are satisfied.

Constant Width Frames

$$k_i^e / k_j^e \geq 0.5 \qquad (7.1a)$$

$$k_i^e / k_j^e \geq 0.75 \qquad (7.2a)$$

Variable Width Frames

$$\frac{k_i^e}{m_i} \Big/ \frac{k_j^e}{m_j} \geq 0.5 \qquad (7.1b)$$

$$\frac{k_i^e}{m_i} \Big/ \frac{k_j^e}{m_j} \geq 0.75 \qquad (7.2b)$$

$k_i^e$ = The smaller effective bent or column stiffness

$k_j^e$ = The larger effective bent or column stiffness

$m_i$ = Tributary mass of column or bent *i*

$m_j$ = Tributary mass of column or bent *j*

The following considerations shall be taken into account when calculating effective stiffness: framing effects, end conditions, column height, percentage of longitudinal and transverse column steel, column diameter, and foundation flexibility. Some of the consequences of not meeting the relative stiffness recommendations defined by equations 7.1 and 7.2 include:

- Increased damage in the stiffer elements
- An unbalanced distribution of inelastic response throughout the structure
- Increased column torsion generated by rigid body rotation of the superstructure

### 7.1.2 Balanced Frame Geometry

It is strongly recommend that the ratio of fundamental periods of vibration for adjacent frames in the longitudinal and transverse direction satisfy equation 7.3.

$$T_i / T_j \geq 0.7 \tag{7.3}$$

$T_i$ = Natural period of the less flexible frame

$T_j$ = Natural period of the more flexible frame

The consequences of not meeting the fundamental period requirements of equation 7.3 include a greater likelihood of out-of-phase response between adjacent frames leading to large relative displacements that increase the probability of longitudinal unseating and collision between frames at the expansion joints. The colliding and relative transverse translation of adjacent frames will transfer the seismic demand from one frame to the next, which can be detrimental to the stand-alone capacity of the frame receiving the additional seismic demand.

### 7.1.3 Adjusting Dynamic Characteristics

The following list of techniques should be considered for adjusting the fundamental period of vibration and/or stiffness to satisfy equations 7.1, 7.2 and 7.3. Refer to Memo to Designer 6-1 for additional information on optimizing performance of bridge frames.

- Oversized pile shafts
- Adjust effective column lengths (i.e. lower footings, isolation casing)
- Modified end fixities
- Reduce/redistribute superstructure mass
- Vary the column cross section and longitudinal reinforcement ratios
- Add or relocate columns
- Modify the hinge/expansion joint layout
- Incorporate isolation bearings or dampers

A careful evaluation of the local ductility demands and capacities is required if project constraints make it impractical to satisfy the stiffness and structure period requirements in equations 7.1, 7.2, and 7.3.

### 7.1.4 End Span Considerations

The influence of the superstructure on the transverse stiffness of columns near the abutment, particularly when calculating shear demand, shall be considered.

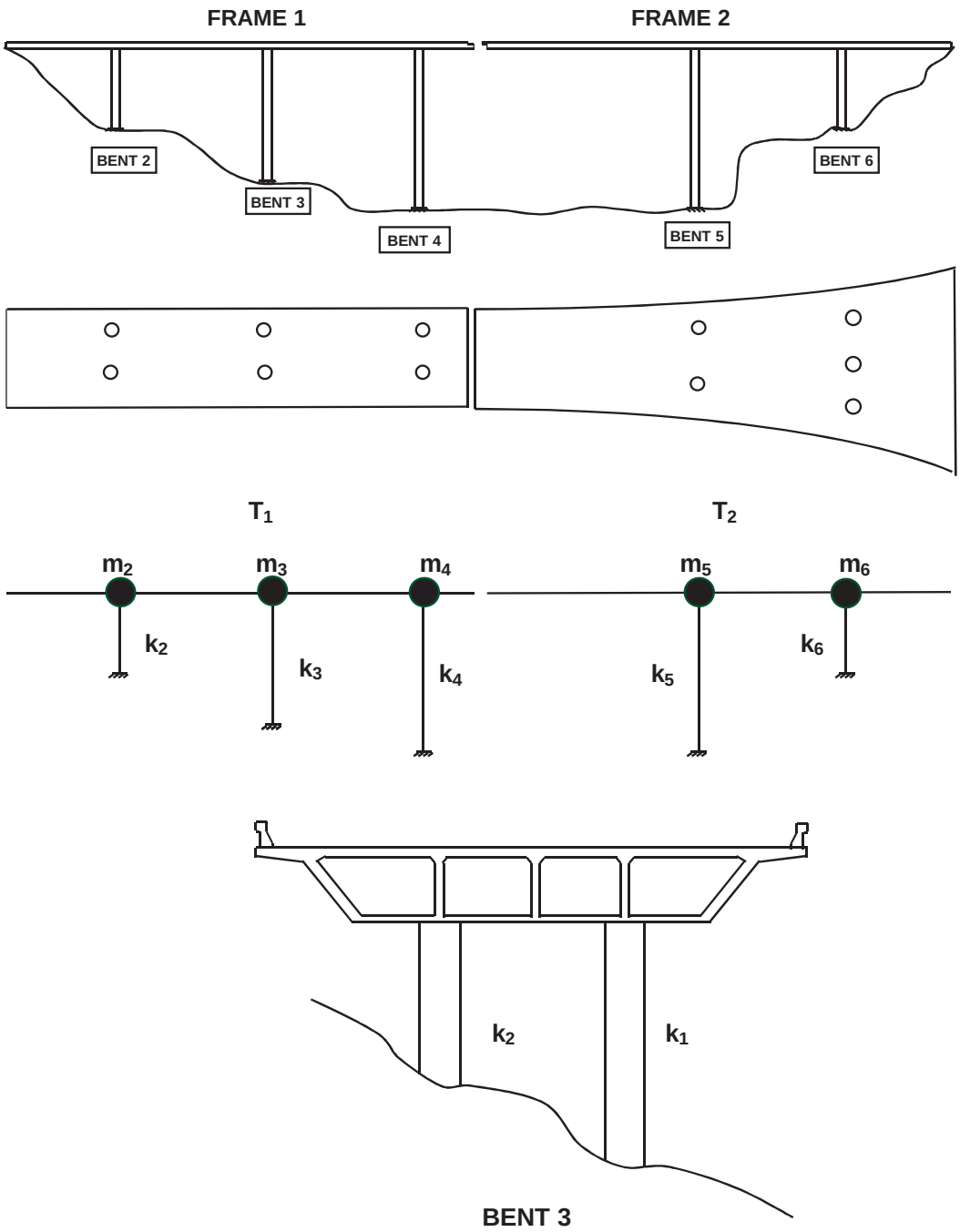


**Figure 7.1 Balanced Stiffness**

## 7.2 Superstructure

### 7.2.1 Girders

#### *7.2.1.1 Effective Superstructure Width*

The effective width of superstructure resisting longitudinal seismic moments is defined by equation 7.4. The effective width for open soffit structures (e.g. T-Beams & I- Girders) is reduced because they offer less resistance to the torsional rotation of the bent cap. The effective superstructure width can be increased at a $45^{o}$ angle as you move away from the bent cap until the full section becomes effective. On skewed bridges, the effective width shall be projected normal to the girders where the centerline of girder intersects the face of the bent cap. See Figure 7.2.

$$B_{eff} = \begin{cases} D_c + 2 \times D_s & \text{Box girders \& solid superstructures} \\ D_c + D_s & \text{Open soffit superstructures} \end{cases} \tag{7.4}$$

Additional superstructure width can be considered effective if the designer verifies the torsional capacity of the cap can distribute the rotational demands beyond the effective width stated in equation 7.4.

If the effective width cannot accommodate enough steel to satisfy the overstrength requirements of Section 4.3.1, the following actions may be taken:

- Thicken the soffit and/or deck slabs
- Increase the resisting section by widening the column*
- Haunch the superstructure
- Add additional columns

* The benefit of using wider columns must be carefully weighed against the increased joint shear demands and larger plastic hinging capacity.

Isolated or lightly reinforced flares shall be ignored when calculating the effective superstructure width. See Section 7.6.5 for additional information on flare design.

### 7.2.2 Vertical Acceleration

If vertical acceleration is considered, per Section 2.1, a separate analysis of the superstructure's nominal capacity shall be performed based on a uniformly applied vertical force equal to 25% of the dead load applied upward and downward, see Figure 7.3. The superstructure at seat type abutment is assumed to be pinned in the vertical direction, up or down. The superstructure flexural capacity shall be based only on continuous mild reinforcement distributed evenly between the top and bottom slabs. The effects of dead load, primary and secondary prestressing shall be ignored. The continuous steel shall be spliced with "service level" couplers as defined in Section 8.1.3, and is considered effective in offsetting the mild reinforcement required for other load cases. Lap splices equal to two times the standard lap may be substituted for the "service splices", provided the laps are placed away from the critical zones (mid-spans and near supports).

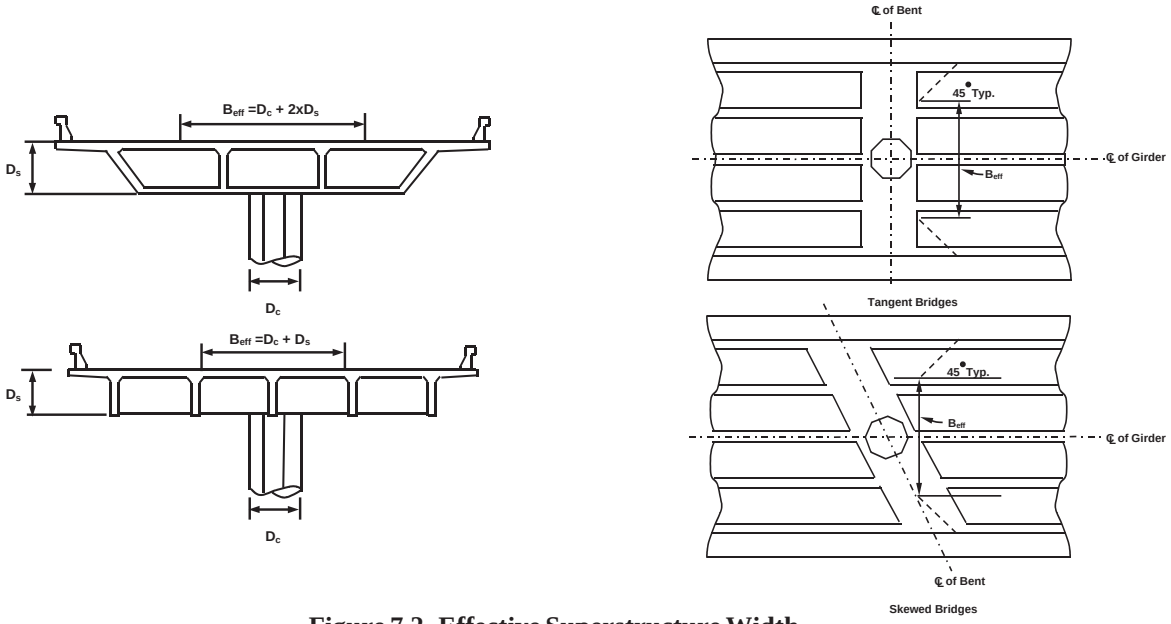


**Figure 7.2 Effective Superstructure Width**

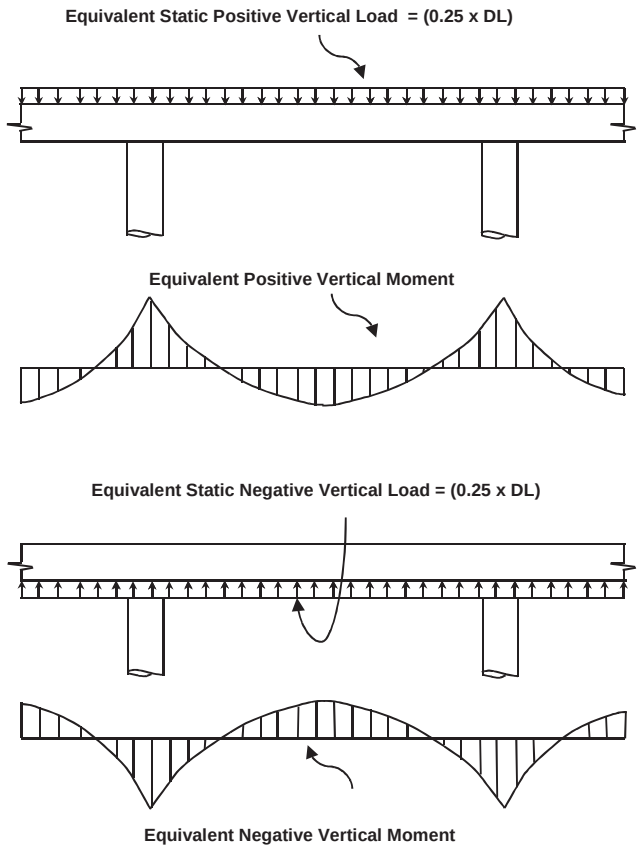


**Figure 7.3 Equivalent Static Vertical Loads & Moments**

The longitudinal side reinforcement in the girders, if vertical acceleration is considered per Section 2.1, shall be capable of resisting 125% of the dead load shear at the bent face by means of shear friction. The enhanced side reinforcement shall extend continuously for a minimum of 2.5 $D_s$ beyond the face of the bent cap.

### 7.2.3 Pre-cast Girders

Historically precast girders lacked a direct positive moment connection between the girders and the cap beam, which could potentially degrade to a pinned connection in the longitudinal direction under seismic demands. Therefore, to provide stability under longitudinal seismic demands, columns shall be fixed at the base unless an integral girder/cap beam connection is provided that is capable of resisting the column overstrength demands as outlined in Sections 4.3.1, 4.3.2, & 7.2.2. Recent research has confirmed the viability of pre-cast spliced girders with integral column/ superstructure details that effectively resist longitudinal seismic loads. This type of system is considered non-standard until design details and procedures are formally adopted. In the interim, project specific design criteria shall be developed per MTD 20-11.

### 7.2.4 Slab Bridges

Slab bridges shall be designed to meet all the strength and ductility requirements as specified in the SDC.

### 7.2.5 Hinges

#### *7.2.5.1 Longitudinal Hinge Performance*

Intermediate hinges are necessary for accommodating longitudinal expansion and contraction resulting from prestress shortening, creep, shrinkage and temperature variations. The hinge allows each frame to vibrate independently during an earthquake. Large relative displacements can develop if the vibrations of the frames are out-of-phase. Sufficient seat width must be provided to prevent unseating.

#### *7.2.5.2 Transverse Hinge Performance*

Typically hinges are expected to transmit the lateral shear forces generated by small earthquakes and service loads. Determining the earthquake force demand on shear keys is difficult since the magnitude is dependent on how much relative displacement occurs between the frames. Forces generated with EDA should not be used to size shear keys. EDA overestimates the resistance provided by the bents and may predict force demands on the shear keys that differ significantly from the actual forces.

#### *7.2.5.3 Frames Meeting the Requirements of Section 7.1.2*

All frames including balanced frames or frames with small differences in mass and/or stiffness will exhibit some out-of-phase response. The objective of meeting the fundamental period recommendations between adjacent frames presented in Section 7.1.2 is to reduce the relative displacements and associated force demands attributed to out-of-phase response.

**Longitudinal Requirements**

For frames adhering to Section 7.1.2 and expected to be exposed to synchronous ground motion, the minimum longitudinal hinge seat width between adjacent frames shall be determined by Section 7.2.5.4.

**Transverse Requirements**

The shear key shall be capable of transferring the shear between adjacent frames if the shear transfer mechanism is included in the demand assessment. The upper bound for the transverse shear demand at the hinge can be estimated by the sum of the overstrength shear capacity of all the columns in the weaker frame. The shear keys must have adequate capacity to meet the demands imposed by service loads.

An adequate gap shall be provided around the shear keys to eliminate binding of the hinge under service operation and to ensure lateral rotation will occur thereby minimizing moment transfer across the expansion joint.

Although large relative displacements are not anticipated for frames with similar periods exposed to synchronous ground motion, certain structural configurations may be susceptible to lateral instability if the transverse shear keys completely fail. Particularly skewed bridges, bridges with three or less girders, and narrow bridges with significant super elevation. Additional restraint, such as XX strong pipe keys, should be considered if stability is questionable after the keys are severely damaged.

### *7.2.5.4 Hinge Seat Width for Frames Meeting the Requirements of Section 7.1.2*

Enough hinge seat width shall be available to accommodate the anticipated thermal movement, prestress shortening, creep, shrinkage, and the relative longitudinal earthquake displacement demand between the two frames calculated by equation 7.6. The seat width normal to the centerline of bearing shall be calculated by equation 7.5 but not less than 24 inches (600 mm).

$$N \geq \begin{cases} \left(\Delta_{p/s} + \Delta_{cr+sh} + \Delta_{temp} + \Delta_{eq} + 4\right) & \text{(in)} \\ \left(\Delta_{p/s} + \Delta_{cr+sh} + \Delta_{temp} + \Delta_{eq} + 100\right) & \text{(mm)} \end{cases} \tag{7.5}$$

$N$ = Minimum seat width normal to the centerline of bearing

$\Delta_{p/s}$ = Displacement attributed to pre-stress shortening

$\Delta_{cr+sh}$ = Displacement attributed to creep and shrinkage

$\Delta_{temp}$ = Displacement attributed to thermal expansion and contraction

$\Delta_{eq}$ = Relative earthquake displacement demand

$$\Delta_{eq} = \sqrt{\left(\Delta_D^1\right)^2 + \left(\Delta_D^2\right)^2} \tag{7.6}$$

$\Delta_D^{(i)}$ = The larger earthquake displacement demand for each frame calculated by the global or stand-alone analysis

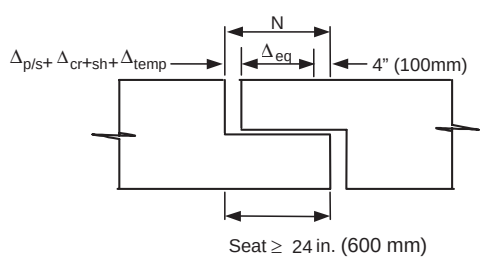


**Figure 7.4 Seat Width Requirements**

#### *7.2.5.5 Frames Not Meeting the Requirements of Section 7.1.2*

Frames that are unbalanced relative to each other have a greater likelihood of responding out-of-phase during earthquakes. Large relative displacements and forces should be anticipated for frames not meeting equation 7.3.

Elastic Analysis, in general, cannot be used to determine the displacement or force demands at the intermediate expansion joints in multi-frame structures. A more sophisticated analysis such as nonlinear dynamic analysis is required that can capture the directivity and time dependency associated with the relative frame displacements. In lieu of nonlinear analysis, the hinge seat can be sized longitudinally and the shear keys isolated transversely to accommodate the absolute sum of the individual frame displacements determined by ESA, EDA, or the initial slope of a "push over" analysis.

Care must be taken to isolate unbalanced frames to insure the seismic demands are not transferred between frames. The following guidelines should be followed when designing and detailing hinges when equation 7.3 is not met.

- Isolate adjacent frames longitudinally by providing a large expansion gap to reduce the likelihood of pounding. Permanent gapping created by prestress shortening, creep, and shrinkage can be considered as part of the isolation between frames.
- Provide enough seat width to reduce the likelihood of unseating. If seat extenders are used they should be isolated transversely to avoid transmitting large lateral shear forces between frames.
- Limit the transverse shear capacity to prevent large lateral forces from being transferred to the stiffer frame. The analytical boundary conditions at the hinge should be either released transversely or able to capture the nonlinear shear friction mechanism expected at the shear key. If the hinges are expected to fail, the column shall be designed to accommodate the displacement demand associated with having the hinge released transversely.

One method for isolating unbalanced frames is to support intermediate expansion joints on closely spaced adjacent bents that can support the superstructure by cantilever beam action. A longitudinal gap is still required to prevent the frames from colliding. Bent supported expansion joints need to be approved on a project-by-project basis, see MTD 20-11.

### 7.2.6 Hinge Restrainers

A satisfactory method for designing the size and number of restrainers required at expansion joints is not currently available. Adequate seat shall be provided to prevent unseating as a primary requirement. Hinge restrainers are considered secondary members to prevent unseating. The following guidelines shall be followed when designing and detailing hinge restrainers.

- Restrainers design should not be based on the force demands predicted by EDA analysis
- A restrainer unit shall be placed in each alternating cell at all hinges (minimum of two restrainer units at each hinge).
- Restrainers shall be detailed to allow for easy inspection and replacement
- Restrainer layout shall be symmetrical about the centerline of the superstructure
- Restrainer systems shall incorporate an adequate gap for expansion

Yield indicators are required on all cable restrainers, see Standard Detail Sheet XS 12-57.1 for details. See MTD 20-3 for material properties pertaining to high strength rods (ASTM A722 Uncoated High-Strength Steel Bar for Prestressing Concrete) and restrainer cables (ASTM A633 Zinc Coated Steel Structural Wire Rope).

### 7.2.7 Pipe Seat Extenders

Pipes seat extenders shall be designed for the induced moments under single or double curvature depending on how the pipe is anchored. If the additional support width provided by the pipe seat extender is required to meet equation 7.5 then hinge restrainers are still required. If the pipe seat extenders are provided as a secondary vertical support system above and beyond what is required to satisfy equation 7.5, hinge restrainers are not required. Pipe seat extenders will substantially increase the shear transfer capacity across expansion joints if significant out-of-phase displacements are anticipated. If this is the case, care must be taken to insure stand-alone frame capacity is not adversely affected by the additional demand transmitted between frames through the pipe seat extenders.

### 7.2.8 Equalizing Bolts

Equalizing bolts are designed for service loads and are considered sacrificial during an earthquake. Equalizing bolts shall be designed so they will not transfer seismic demand between frames or inhibit the performance of the hinge restrainers. Equalizing bolts shall be detailed so they can be easily inspected for damage and/or replaced after an earthquake.

## 7.3 Bent Caps

### 7.3.1 Integral Bent Caps

Bent caps are considered integral if they terminate at the outside of the exterior girder and respond monolithically with the girder system during dynamic excitation.

#### *7.3.1.1 Effective Bent Cap Width*

The integral cap width considered effective for resisting flexural demands from plastic hinging in the columns shall be determined by equation 7.7. See Figure 7.5.

$$B_{eff} = B_{cap} + (12 \times t) \tag{7.7}$$

$t$ = Thickness of the top or bottom slab

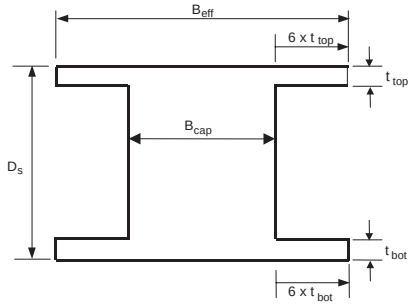


**Figure 7.5 Effective Bent Cap Width**

### 7.3.2 Non-Integral Bent Caps

Superstructure members supported on non-integral bent caps shall be simply supported at the bent cap or span continuously with a separation detail such as an elastomeric pad or isolation bearing between the bent cap and the superstructure. Non-integral caps must satisfy all the SDC requirements for frames in the transverse direction.

#### *7.3.2.1 Minimum Bent Cap Seat Width*

Drop caps supporting superstructures with expansion joints at the cap shall have sufficient width to prevent unseating. The minimum seat width for non-integral bent caps shall be determined by equation 7.5. Continuity devices such as rigid restrainers or web plates may be used to ensure unseating does not occur but shall not be used in lieu of adequate bent cap width.

### *7.3.3 Deleted*

### 7.3.4 Bent Cap Depth

Every effort should be made to provide enough cap depth to develop the column longitudinal reinforcement without hooks. See Section 8.2 regarding anchoring column reinforcement into the bent cap.

## 7.4 Superstructure Joint Design

### 7.4.1 Joint Performance

Moment resisting connections between the superstructure and the column shall be designed to transmit the maximum forces produced when the column has reached its overstrength capacity $M_o^{col}$ including the effects of overstrength shear $V_o^{col}$.

### 7.4.2 Joint Proportioning

All superstructure/column moment resisting joints shall be proportioned so the principal stresses satisfy equations 7.8 and 7.9. See Section 7.4.4.1 for the numerical definition of principal stress.

Principal compression: $p_c \le 0.25 \times f'_c$ (7.8)

Principal tension: $p_t \le 12 \times \sqrt{f'_c}$ (psi) $\quad p_t \le 1.0 \times \sqrt{f'_c}$ (MPa) (7.9)

#### *7.4.2.1 Minimum Bent Cap Width*

The minimum bent cap width required for adequate joint shear transfer is specified in equation 7.10. Larger cap widths may be required to develop the compression strut outside the joint for large diameter columns.

$$B_{cap} = D_c + 2 \quad \text{(ft)} \qquad\qquad B_{cap} = D_c + 600 \quad \text{(mm)} \tag{7.10}$$

### 7.4.3 Joint Description

The following types of joints are considered T joints for joint shear analysis:

- Integral interior joints of multi-column bents in the transverse direction.
- All column/superstructure joints in the longitudinal direction.
- Exterior column joints for box girder superstructures if the cap beam extends beyond the joint far enough to develop the longitudinal cap reinforcement.[8]

### 7.4.4 T Joint Shear Design

#### *7.4.4.1 Principal Stress Definition*

The principal tension and compression stresses in a joint are defined as follows:

$$p_t = \frac{(f_h + f_v)}{2} - \sqrt{\left(\frac{f_h - f_v}{2}\right)^2 + v_{jv}^2} \tag{7.11}$$ [9]

$$p_c = \frac{(f_h + f_v)}{2} + \sqrt{\left(\frac{f_h - f_v}{2}\right)^2 + v_{jv}^2} \tag{7.12}$$

$$v_{jv} = T_c / A_{jv} \tag{7.13}$$

$$A_{jv} = l_{ac} \times B_{cap} \tag{7.14}$$ [10]

$$f_v = \frac{P_c}{A_{jh}} \tag{7.15}$$

$$A_{jh} = (D_c + D_s) \times B_{cap} \tag{7.16}$$

$$f_h = \frac{P_b}{B_{cap} \times D_s} \tag{7.17}$$

---

8 All other exterior joints are considered knee joints in the transverse direction. Knee joints are nonstandard elements, design criteria shall be developed on a project specific basis.

9 A negative result from equation 7.11 signifies the joint has nominal principal tensile stresses.

10 Equation 7.14 defines the effective joint area in terms of the bent cap width regardless of the direction of bending. This lone simplified definition of $A_{jv}$ may conservatively underestimate the effective joint area for columns with large cross section aspect ratios in longitudinal bending.

Where:

| | | |
|---|---|---|
| $A_{jh}$ | = | The effective horizontal joint area |
| $A_{jv}$ | = | The effective vertical joint area |
| $B_{cap}$ | = | Bent cap width |
| $D_c$ | = | Cross–sectional dimension of column in the direction of bending |
| $D_s$ | = | Depth of superstructure at the bent cap |
| $l_{ac}$ | = | Length of column reinforcement embedded into the bent cap |
| $P_c$ | = | The column axial force including the effects of overturning |
| $P_b$ | = | The beam axial force at the center of the joint including prestressing |
| $T_c$ | = | The column tensile force defined as $M_o^{col}/h$, where $h$ is the distance from c.g. of tensile force to c.g. of compressive force on the section, or alternatively $T_c$ may be obtained from the moment-curvature analysis of the cross section. |

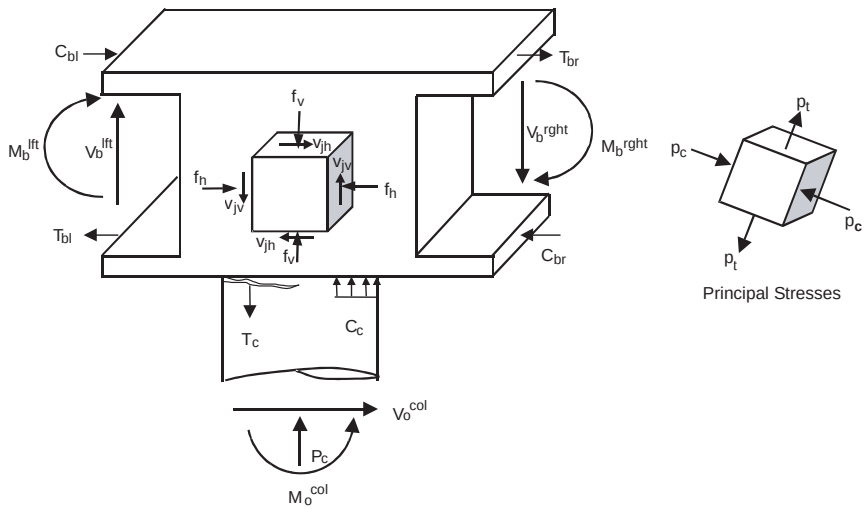


**Figure 7.6 Joint Shear Stresses in T Joints**

Note: Unless the prestressing is specifically designed to provide horizontal joint compression, $f_h$ can typically be ignored without significantly effecting the principal stress calculation.

### *7.4.4.2 Minimum Joint Shear Reinforcement*

If the principal tension stress $p_t$ does not exceed $3.5 \times \sqrt{f_c'}$ psi ($0.29 \times \sqrt{f_c'}$ MPa) the minimum joint shear reinforcement, as specified in equation 7.18, shall be provided. This joint shear reinforcement may be provided in the form of column transverse steel continued into the bent cap. No additional joint reinforcement is required. The volumetric ratio of transverse column reinforcement $\rho_s$ continued into the cap shall not be less than the value specified by equation 7.18.

$$\rho_{s,\,min} = \frac{3.5 \times \sqrt{f_c'}}{f_{yh}} \quad \text{(psi)} \qquad \frac{0.29 \times \sqrt{f_c'}}{f_{yh}} \quad \text{(MPa)} \tag{7.18}$$

The reinforcement shall be in the form of spirals, hoops, or intersecting spirals or hoops.

If the principal tension stress $p_t$ exceeds $3.5 \times \sqrt{f'_c}$ psi ( $0.29 \times \sqrt{f'_c}$ MPa) the joint shear reinforcement specified in Section 7.4.4.3 is required.

### *7.4.4.3 Joint Shear Reinforcement*

**A) Vertical Stirrups:**

$$A_s^{jv} = 0.2 \times A_{st} \tag{7.19}$$

$A_{st}$ = Total area of column reinforcement anchored in the joint

Vertical stirrups or ties shall be placed transversely within a distance $D_c$ extending from either side of the column centerline. The vertical stirrup area, $A_{jv}$ is required on each side of the column or pier wall, see Figures 7.7, 7.8, and 7.10. The stirrups provided in the overlapping areas shown in Figure 7.7 shall count towards meeting the requirements of both areas creating the overlap. These stirrups can be used to meet other requirements documented elsewhere including the shear in the bent cap.

**B) Horizontal Stirrups:**

Horizontal stirrups or ties shall be placed transversely around the vertical stirrups or ties in two or more intermediate layers spaced vertically at not more than 18 inches (450mm). This horizontal reinforcement $A_s^{jh}$ shall be placed within a distance $D_c$ extending from either side of the column centerline, see Figure 7.9.

$$A_s^{jh} = 0.1 \times A_{st} \tag{7.20}$$

**C) Horizontal Side Reinforcement:**

The total longitudinal side face reinforcement in the bent cap shall be at least equal to the greater of the areas specified in equation 7.21 and shall be placed near the side faces of the bent cap with a maximum spacing of 12 inches (300mm), see Figure 7.8. Any side reinforcement placed to meet other requirements shall count towards meeting the requirement in this section.

$$A_s^{sf} \geq \begin{cases} 0.1 \times A_{cap}^{top} \\ \text{or} \\ 0.1 \times A_{cap}^{bot} \end{cases} \qquad A_{cap} = \text{Area of bent cap top or bottom flexural steel} \tag{7.21}$$

**D) J-Dowels**

For bents skewed greater than 20°, J-dowels hooked around the longitudinal top deck steel extending alternatively 24 inches (600 mm) and 30 inches (750 mm) into the bent cap are required. The J-dowel reinforcement shall be equal or greater than the area specified in equation 7.22.

$$A_s^{\text{j-bar}} = 0.08 \times A_{st} \tag{7.22}$$

The J-dowels shall be placed within a rectangular region defined by the width of the bent cap and the distance $D_c$ on either side of the centerline of the column, see Figure 7.10.

**E) Transverse Reinforcement**

Transverse reinforcement in the joint region shall consist of hoops with a minimum reinforcement ratio specified by equation 7.23. The column confinement reinforcement extended into the bent cap may be used to meet this requirement.

$$\rho_s = 0.4 \times \frac{A_{st}}{l_{ac}^2} \qquad \text{(in, mm)} \qquad (7.23)$$

For interlocking cores $\rho_s$ shall be based on area of reinforcement ($A_{st}$) of each core.
All vertical column bars shall be extended as close as possible to the top bent cap reinforcement.

**F) Main Column Reinforcement**

The main column reinforcement shall extend into the cap as deep as possible to fully develop the compression strut mechanism in the joint.

### 7.4.5 Knee Joints

Knee joints differ from T joints because the joint response varies with the direction of the moment (opening or closing) applied to the joint. Knee joints require special reinforcing details that are considered non-standard and shall be included in the project specific seismic design criteria.

It may be desirable to pin the top of the column to avoid knee joint requirements. This eliminates the joint shear transfer through the joint and limits the torsion demand transferred to the cap beam. However, the benefits of a pinned exterior joint should be weighed against increased foundation demands and the effect on the frame's overall performance.

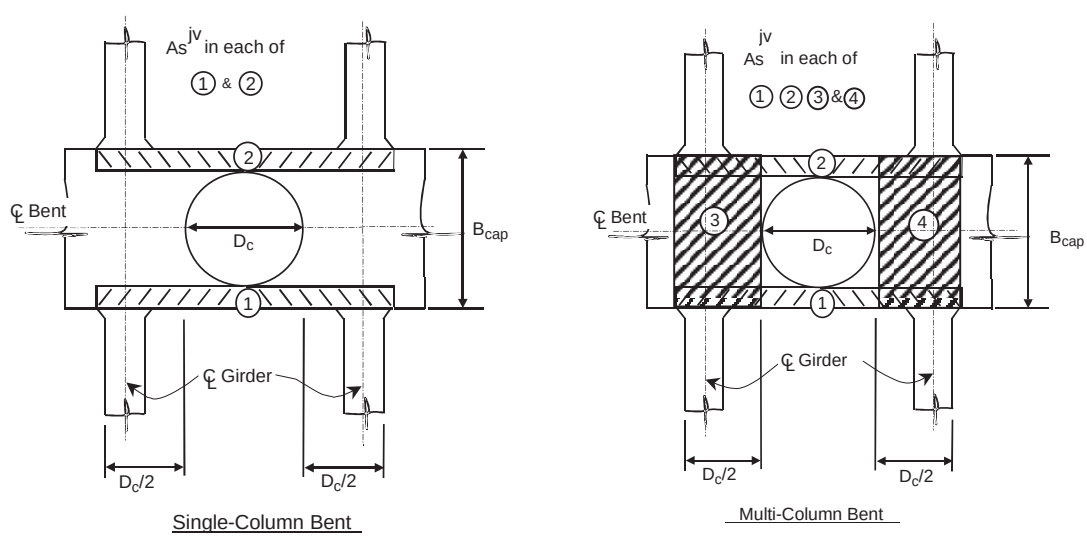


**Figure 7.7 Location of Vertical Joint Reinforcement (Plan View of Bridge)**

**Bent Cap Details, Section at Column for Bridges with 0 to 20-Degree Skew.**
(Detail Applies to Sections Within 2 x Diameter of Column, Centered About CL of Column).
(Detail Applies to T-Beam and Box Girder Bridges Where Deck Reinforcement is Placed Parallel to Cap).

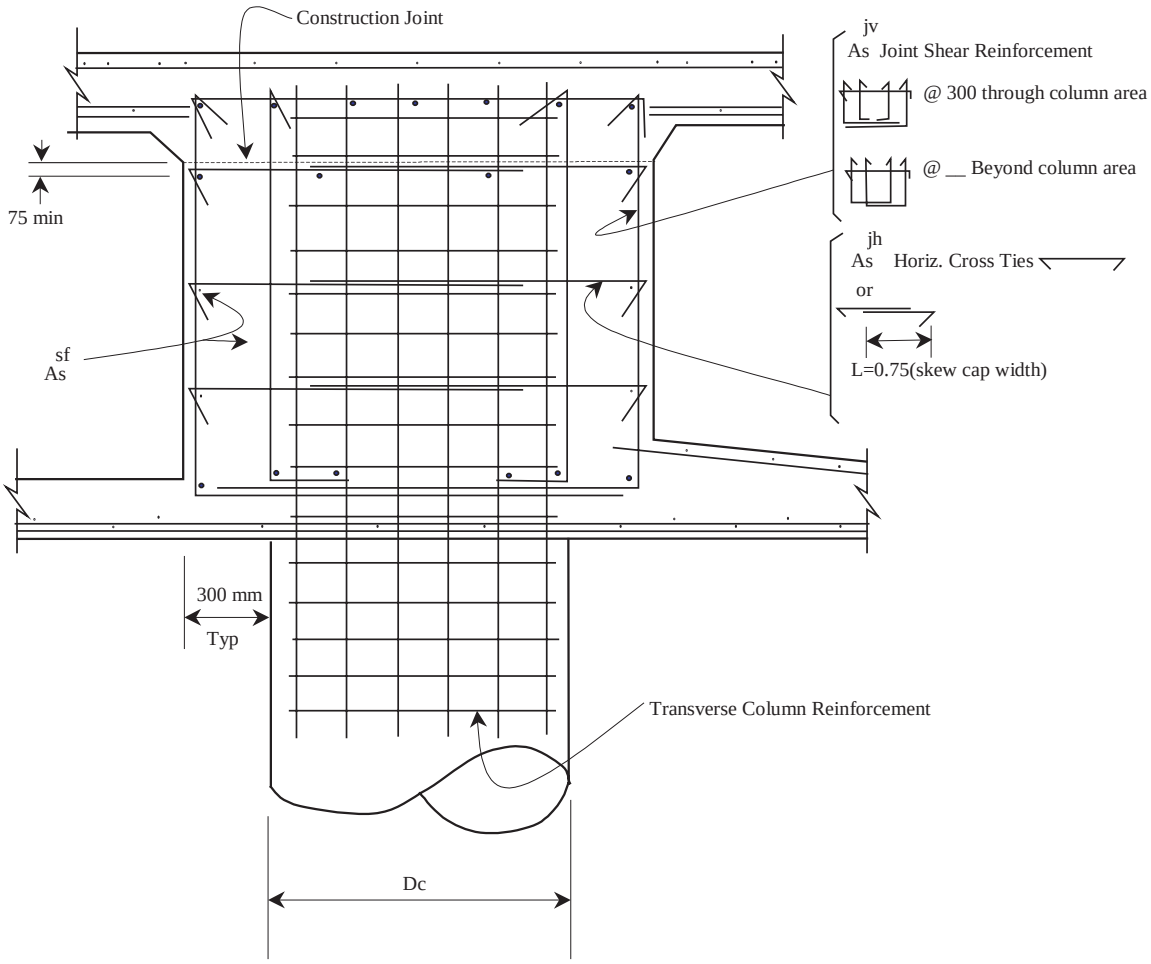


**Figure 7.8 Joint Shear Reinforcement Details[11]**

[11] Figures 7.8, 7.9, and 7.10 illustrate the general location for joint shear reinforcement in the bent cap.

**Bent Cap Elevation.**
Horizontal Cross Tie and J-bar Placing Pattern.

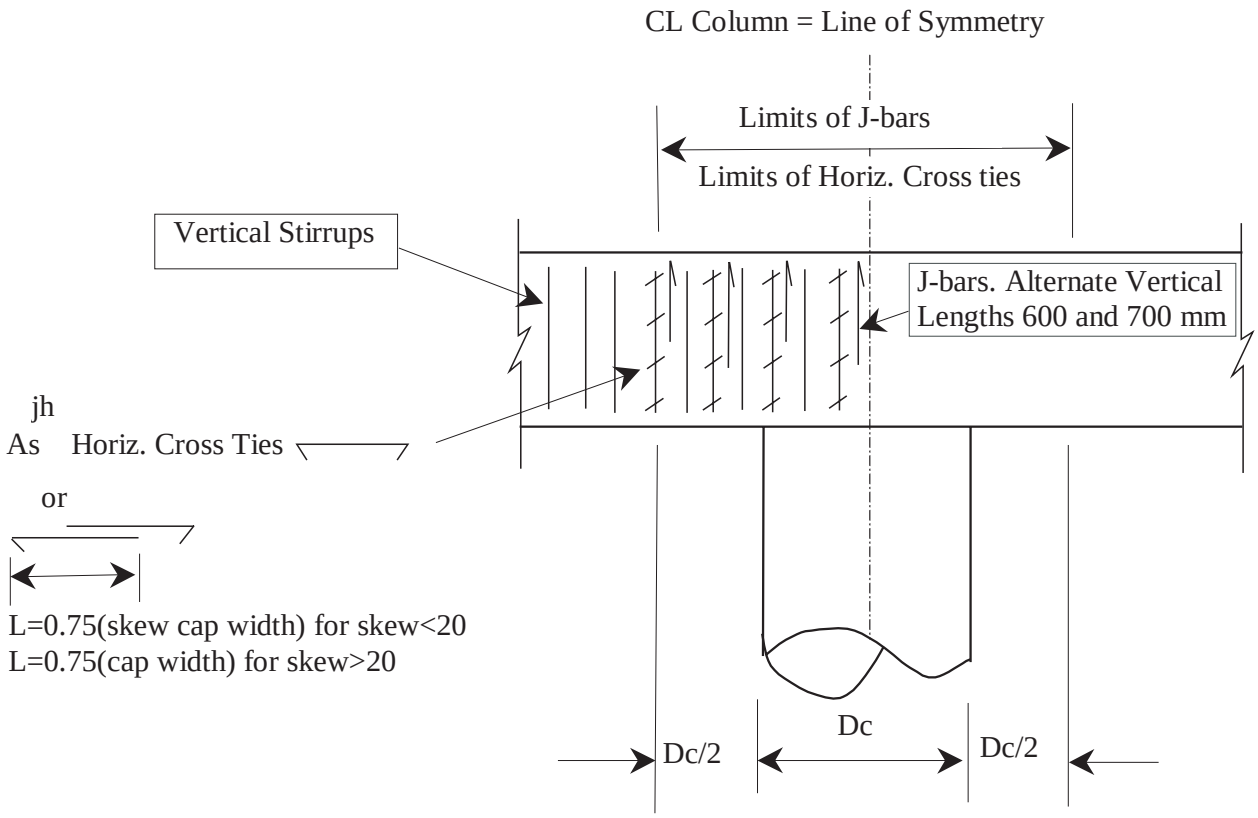


**Figure 7.9 Location of Horizontal Joint Shear Steel**[12]

[12] Figures 7.8, 7.9, and 7.10 illustrate the general location for joint shear reinforcement in the bent cap.

**Bent Cap Details, Section at Column for Bridges with Skew Larger than 20 Degrees.**
(Detail Applies to Sections Within 2 x Diameter of Column, Centered About CL of Column).
(Detail Applies to T-Beam and Box Girder Bridges Where Deck Reinforcement is Placed Normal or Radial to CL Bridge).

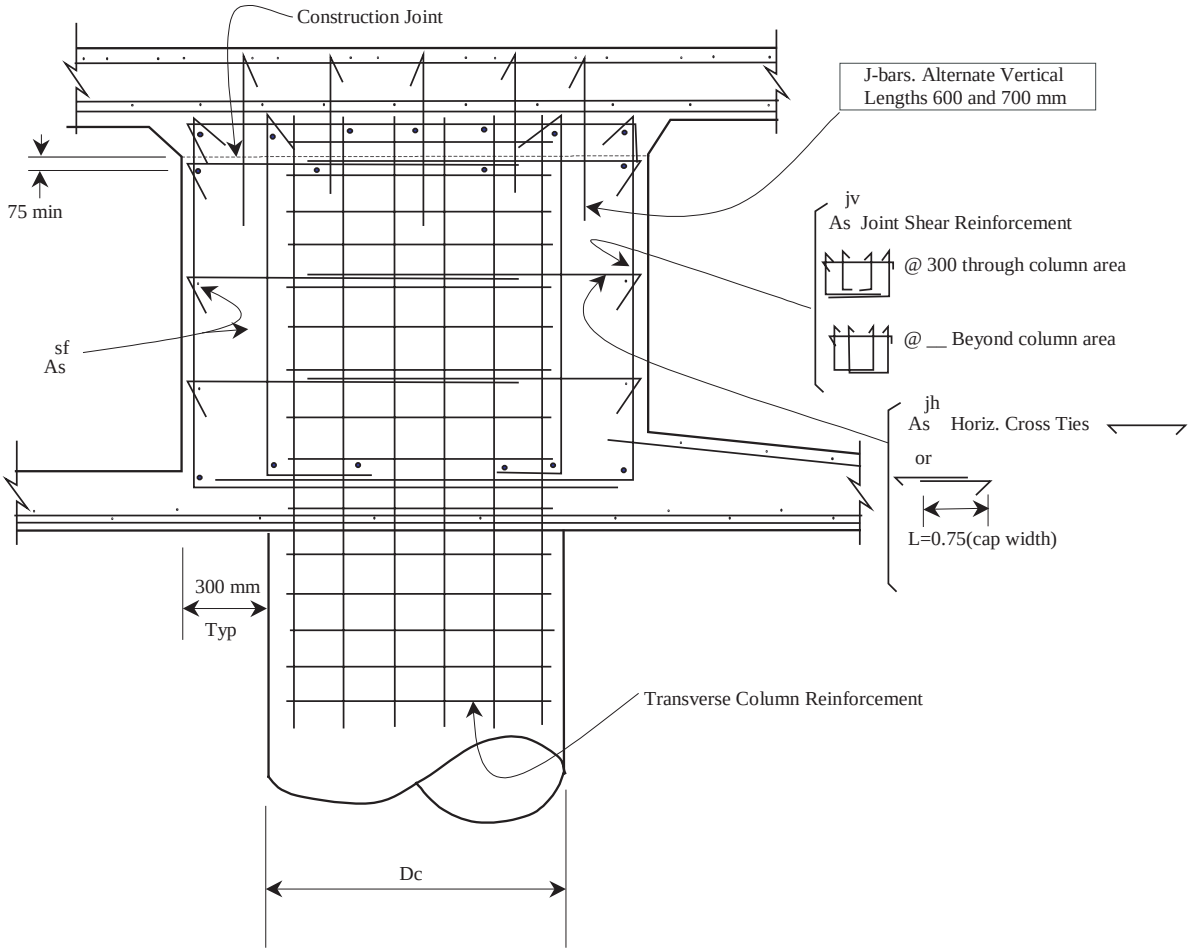


**Figure 7.10 Additional Joint Shear Steel for Skewed Bridges[13]**

[13] Figures 7.8, 7.9, and 7.10 illustrate the general location for joint shear reinforcement in the bent cap.

## 7.5 Bearings

For Ordinary Standard bridges bearings are considered sacrificial elements. Typically bearings are designed and detailed for service loads. However, bearings shall be checked to insure their capacity and mode of failure are consistent with the assumptions made in the seismic analysis. The designer should consider detailing bearings so they can be easily inspected for damage and replaced or repaired after an earthquake.

### 7.5.1 Elastomeric Bearings

The lateral shear capacity of elastomeric bearing pads is controlled by either the dynamic friction capacity between the pad and the bearing seat or the shear strain capacity of the pad. Test results have demonstrated the dynamic coefficient of friction between concrete and neoprene is 0.40 and between neoprene and steel is 0.35. The maximum shear strain resisted by elastomeric pads prior to failure is estimated at $\pm 150\%$.

### 7.5.2 Sliding Bearings

PTFE spherical bearings and PTFE elastomeric bearings utilize low friction PTFE sheet resin. Typical friction coefficients for these bearings vary between 0.04 to 0.08. The friction coefficient is dependent on contact pressure, temperature, sliding speed, and the number of sliding cycles. Friction values may be as much as 5 to 10 times higher at sliding speeds anticipated under seismic loads compared to the coefficients under thermal expansion.

A common mode of failure for sliding bearings under moderate earthquakes occurs when the PTFE surface slides beyond the limits of the sole plate often damaging the PTFE surface. The sole plate should be extended a reasonable amount to eliminate this mode of failure whenever possible.

## 7.6 Columns & Pier Walls

### 7.6.1 Column Dimensions

Every effort shall be made to limit the column cross sectional dimensions to the depth of the superstructure. This requirement may be difficult to meet on columns with high $L/D$ ratios. If the column dimensions exceed the depth of the bent cap it may be difficult to meet the joint shear requirements in Section 7.4.2, the superstructure capacity requirements in Section 4.3.2.1, and the ductility requirements in Section 3.1.4.1.

The relationship between column cross section and bent cap depth specified in equation 7.24 is a guideline based on observation. Maintaining this ratio should produce reasonably well proportioned structures.

$$0.7 < \frac{D_c}{D_s} < 1.0 \tag{7.24}$$

### 7.6.2 Analytical Plastic Hinge Length

The analytical plastic hinge length is the equivalent length of column over which the plastic curvature is assumed constant for estimating plastic rotation.

**7.6.2 (a) Columns & Type II Shafts:**

$$L_p = \begin{cases} 0.08L + 0.15 f_{ye} d_{bl} \geq 0.3 f_{ye} d_{bl} & \text{(in, ksi)} \\ 0.08L + 0.022 f_{ye} d_{bl} \geq 0.044 f_{ye} d_{bl} & \text{(mm, MPa)} \end{cases} \tag{7.25}$$

**7.6.2 (b) Horizontally Isolated Flared Columns**

$$L_p = \begin{cases} G + 0.3 f_{ye} d_{bl} & \text{(in, ksi)} \\ G + 0.044 f_{ye} d_{bl} & \text{(mm, MPa)} \end{cases} \tag{7.26}$$

$G$ = The gap between the isolated flare and the soffit of the bent cap

**7.6.2 (c) Non-cased Type I Pile Shafts:**

$$L_p = D^* + 0.08H' \tag{7.27}$$

$D^*$ = Diameter for circular shafts or the least cross section dimension for oblong shafts.

$H'$ = Length of pile shaft/column from point of maximum moment to point of contra-flexure above ground considering the base of plastic hinge at the point of maximum moment.

### 7.6.3 Plastic Hinge Region

The plastic hinge region, $L_{pr}$ defines the portion of the column, pier, or shaft that requires enhanced lateral confinement. $L_{pr}$ is defined by the larger of:

- 1.5 times the cross sectional dimension in the direction of bending
- The region of column where the moment exceeds 75% of the maximum plastic moment, $M_p^{col}$
- 0.25(Length of column from the point of maximum moment to the point of contra-flexure)

### 7.6.4 Multi-Column Bents

The effects of axial load redistribution due to overturning forces shall be considered when calculating the plastic moment capacity for multi-column bents in the transverse direction.

### 7.6.5 Column Flares

#### *7.6.5.1 Horizontally Isolated Column Flares*

The preferred method for detailing flares is to horizontally isolate the top of flared sections from the soffit of the cap beam. Isolating the flare allows the flexural hinge to form at the top of the column, minimizing the seismic shear demand on the column. The added mass and stiffness of the isolated flare typically can be ignored in the dynamic analysis.

A horizontal gap isolating the flare from the cap beam shall extend over the entire cross section of the flare excluding a core region equivalent to the prismatic column cross section. The gap shall be large enough so that it will not close during a seismic event. The gap thickness, *G* shall be based on the estimated ductility demand and corresponding plastic hinge rotation capacity. The minimum gap thickness shall be 2 inches (50 mm). See Section 7.6.2 for the appropriate plastic hinge length of horizontally isolated flares.

If the plastic hinge rotation based on the plastic hinge length specified Section 7.6.2 (b) provides insufficient column displacement capacity, the designer may elect to add vertical flare isolation. When vertical flare isolation is used, the analytical plastic hinge length shall be taken as the lesser of $L_p$ calculated using Equations 7.25 and 7.26 where *G* is the length from the bent cap soffit to the bottom of the vertical flare isolation region.[14]

#### *7.6.5.2 Lightly Reinforced Column Flares*

Column flares that are integrally connected to the bent cap soffit should be avoided whenever possible. Lightly reinforced integral flares shall only be used when required for service load design or aesthetic considerations and the peak rock acceleration is less than 0.5*g*. The flare geometry shall be kept as slender as possible. Test results have shown that slender lightly reinforced flares perform adequately after cracking has developed in the flare concrete essentially separating the flare from the confined column core. However, integral flares require higher shear forces and moments to form the plastic hinge at the top of column compared to isolated flares. The column section at the base of the flare must have adequate capacity to insure the plastic hinge will form at the top of column. The higher plastic hinging forces must be considered in the design of the column, superstructure and footing.

#### *7.6.5.3 Flare Reinforcement*

Column flares shall be nominally reinforced outside the confined column core to prevent the flare concrete from completely separating from the column at high ductility levels.

### 7.6.6 Pier Walls

Pier walls shall be designed to perform in a ductile manner longitudinally (about the weak axis), and to remain essentially elastic in the transverse direction (about the strong axis). The large difference in stiffness between the strong and weak axis of pier walls leads to complex foundation behavior, see Section 7.7.

### 7.6.7 Column Key Design

Column shear keys shall be designed for the axial and shear forces associated with the column's overstrength moment $M_o^{col}$ including the effects of overturning. The key reinforcement shall be located as close to the center of the column as possible to minimize developing a force couple within the key reinforcement. Steel pipe sections may be used in lieu of reinforcing steel to relieve congestion and reduce the moment generated within the key. Any appreciable moment generated by the key steel should be considered in the footing design.

[14] The horizontal flare isolation detail is easier to construct than a combined horizontal and vertical isolation detail and is preferred wherever possible. Laboratory testing is scheduled to validate the plastic hinge length specified in equation 7.26.

## 7.7 Foundations

### 7.7.1 Footing Design

#### *7.7.1.1 Pile Foundations in Competent Soil*

The lateral, vertical, and rotational capacity of the foundation shall exceed the respective demands. The size and number of piles and the pile group layout shall be designed to resist service level moments, shears, and axial loads and the moment demand induced by the column plastic hinging mechanism. Equations 7.28 and 7.29 define lateral shear and moment equilibrium in the foundation when the column reaches its overstrength capacity, see Figure 7.11.

$$V_o^{col} - \sum V_{(i)}^{pile} - R_s = 0 \tag{7.28}$$

$$M_o^{col} + V_o^{col} \times D_{ftg} + \sum M_{(i)}^{pile} - R_s \times (D_{ftg} - D_{R_s}) - \sum (C_{(i)}^{pile} \times c_{(i)}) - \sum (T_{(i)}^{pile} \times c_{(i)}) = 0 \tag{7.29}$$

$c_{(i)}$ = Distance from pile ($i$) to the center of gravity of the pile group in the X or Y direction

$C_{(i)}^{pile}$ = Axial compression demand on pile ($i$)

$D_{ftg}$ = Depth of footing

$D_{R_s}$ = Depth of resultant soil resistance measured from the top of footing

$M_{(i)}^{pile}$ = The moment demand generated in pile ($i$), $M_{(i)}^{pile} = 0$ if the piles are pinned to the footing

$R_s$ = Estimated resultant soil resistance on the end of the footing

$T_{(i)}^{pile}$ = Axial tension demand on pile ($i$)

$V_{(i)}^{pile}$ = Lateral shear resistance provided by pile ($i$)

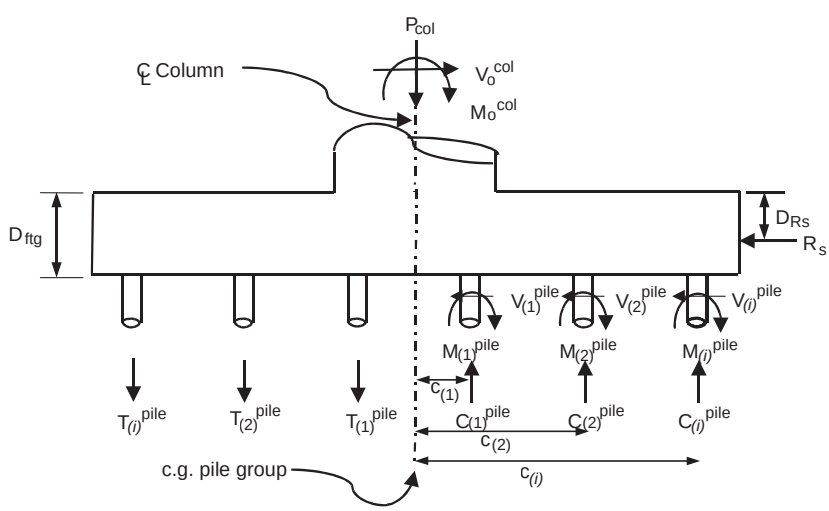


Pile shears and moments shown on right side only, left side similar
Effects of footing weight and soil overburden not shown

**Figure 7.11 Footing Force Equilibrium**

The design of pile foundations in competent soil can be greatly simplified if we rely on inherent capacity that is not directly incorporated in the foundation assessment. For example, typically pile axial resistance exceeds the designed nominal resistance and axial load redistributes to adjacent piles when an individual pile's geotechnical capacity is exceeded.

The simplified foundation model illustrated in Figure 7.12 is based on the following assumptions. A more sophisticated analysis may be warranted if project specific parameters invalidate any of these assumptions:

- The passive resistance of the soil along the leading edge of the footing and upper 4 to 8 pile diameters combined with the friction along the sides and bottom of the pile cap is sufficient to resist the column overstrength shear $V_o^{col}$.
- The pile cap is infinitely rigid, its width is entirely effective, and the pile loads can be calculated from the static equations of equilibrium.
- The pile group's nominal moment resistance is limited to the capacity available when any individual pile reaches its nominal axial resistance.
- Group effects for pile footings surrounded by competent soil and a minimum of three diameters center-to-center pile spacing are relatively small and can be ignored.
- Piles designed with a pinned connection to the pile cap will not transfer significant moment to the pile cap.
- Pile groups designed with the simplified foundation model can be sized to resist the plastic moment of the column $M_p$ in lieu of $M_o$.

Equation 7.30 defines the axial demand on an individual pile when the column reaches its plastic hinging capacity based on force equilibrium in conjunction with the previously stated assumptions. A similar model can be used to analyze and design spread footing foundations that are surrounded by competent soil.

$$\left.\begin{matrix} C_{(i)}^{pile} \\ T_{(i)}^{pile} \end{matrix}\right\} = \frac{P_c}{N} \pm \frac{M_{p_{(y)}}^{col} \times c_{x(i)}}{I_{p.g.(y)}} \pm \frac{M_{p_{(x)}}^{col} \times c_{y(i)}}{I_{p.g.(x)}} \tag{7.30}$$

$$I_{p.g.(y)} = \sum n \times c_{y(i)}^2 \qquad I_{p.g.(x)} = \sum n \times c_{x(i)}^2 \tag{7.31}$$

Where:

| | | |
|---|---|---|
| $I_{p.g.}$ | = | Moment of inertia of the pile group defined by equation 7.31 |
| $M_{p_{(y),(x)}}^{col}$ | = | The component of the column plastic moment capacity about the X or Y axis |
| $N_p$ | = | Total number of piles in the pile group |
| $n$ | = | The total number of piles at distance $c_{(i)}$ from the centroid of the pile group |
| $P_c$ | = | The total axial load on the pile group including column axial load (dead load+EQ load), footing weight, and overburden soil weight |

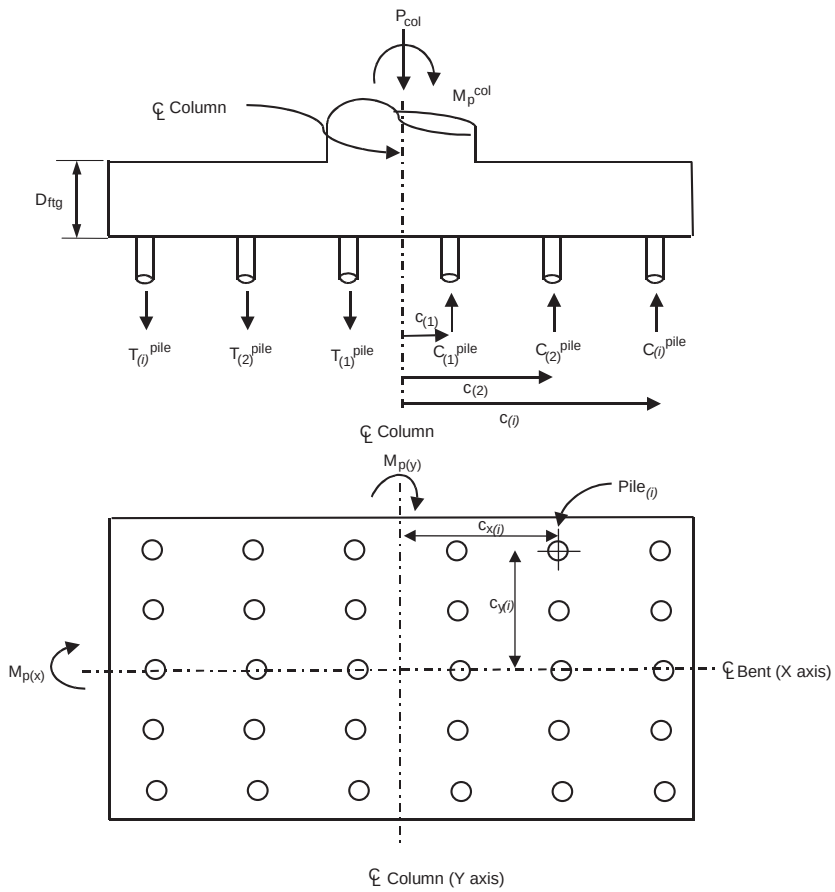


**Figure 7.12 Simplified Pile Model for Foundations in Competent Soil**

### *7.7.1.2 Pile Foundations in Marginal Soil*

#### *7.7.1.2.1 Lateral Design*

In marginal soils the pile cap may not dominate the lateral stiffness of the foundation, as is expected in competent soil, possibly leading to significant lateral displacements. The designer shall verify that the lateral capacity of the foundation exceeds the lateral demand transmitted by the column, including the pile's capability of maintaining axial load capacity at the expected lateral displacement.

The designer should select the most cost effective strategy for increasing the lateral resistance of the foundation when required. The following methods are commonly used to increase lateral foundation capacity.

- Deepen the footing/pile cap to increase passive resistance
- Increase the amount of fixity at the pile/footing connection and strengthen the upper portion of the pile
- Use a more ductile pile type that can develop soil resistance at larger pile deflections
- Add additional piles

#### *7.7.1.2.2 Lateral Capacity of Fixed Head Piles*

The lateral capacity assessment of fixed head piles requires a project specific design which considers the effects of shear, moment, axial load, stiffness, soil capacity, and stability.

#### *7.7.1.2.3 Passive Earth Resistance for Pile Caps in Marginal Soil*

Assessing the passive resistance of the soil surrounding pile caps under dynamic loading is complex. The designer may conservatively elect to ignore the soil's contribution in resisting lateral loads. In this situation, the piles must be capable of resisting the entire lateral demand without exceeding the force or deformation capacity of the piles.

Alternatively, contact the Project Geologist/Geotechnical Engineer to obtain force deformation relationships for the soil that will be mobilized against the footing. The designer should bear in mind that significant displacement may be associated with the soil's ultimate passive resistance.

### *7.7.1.3 Rigid Footing Response*

The length to thickness ratio along the principal axes of the footing must satisfy equation 7.32 if rigid footing behavior and the associated linear distribution of pile forces and deflections is assumed.

$$L_{ftg} / D_{ftg} \leq 2.5 \tag{7.32}$$

$L_{ftg}$ = The cantilever length of the pile cap measured from the face of the column to the edge of the footing.

### *7.7.1.4 Footing Joint Shear*

All footing/column moment resisting joints shall be proportioned so the principal stresses meet the following criteria:

Principal compression:

$$p_c \leq 0.25 \times f'_c \tag{7.33}$$

Principal tension:

$$p_t \leq \begin{cases} 12 \times \sqrt{f'_c} & \text{(psi)} \\ 1.0 \times \sqrt{f'_c} & \text{(MPa)} \end{cases} \tag{7.34}$$

Where:

$$p_t = \frac{f_v}{2} - \sqrt{\left(\frac{f_v}{2}\right)^2 + v_{jv}^2} \tag{7.35}$$

$$p_c = \frac{f_v}{2} + \sqrt{\left(\frac{f_v}{2}\right)^2 + v_{jv}^2} \tag{7.36}$$

$$v_{jv} = \frac{T_{jv}}{B_{eff}^{ftg} \times D_{ftg}} \tag{7.37}$$

$$T_{jv} = T_c - \sum T_{(i)}^{pile} \tag{7.38}$$

$T_c$ = Column tensile force associated with $M_o^{col}$

$\sum T_{(i)}^{pile}$ = Summation of the hold down force in the tension piles.

$$B_{eff}^{ftg} = \begin{cases} \sqrt{2} \times D_c & \text{Circular Column} \\ B_c + D_c & \text{Rectangular Column} \end{cases} \tag{7.39}$$

$$f_v = \frac{P_c}{A_{jh}^{ftg}} \tag{7.40}$$

$$A_{jh}^{ftg} = \begin{cases} \left(D_c + D_{ftg}\right)^2 & \text{Circular Column} \\ \left(D_c + \frac{D_{ftg}}{2}\right) \times \left(B_c + \frac{D_{ftg}}{2}\right) & \text{Rectangular Column} \end{cases} \tag{7.41}$$

Where:

$A_{jh}^{ftg}$ is the effective horizontal area at mid-depth of the footing, assuming a 45° spread away from the boundary of the column in all directions, see Figure 7.13.

### *7.7.1.5 Effective Footing Width for Flexure*

If the footing is proportioned according to Sections 7.7.1.3 and 7.7.1.4 the entire width of the footing can be considered effective in resisting the column overstrength flexure and the associated shear.

### *7.7.1.6 Effects of Large Capacity Piles on Footing Design*

The designer shall insure the footing has sufficient strength to resist localized pile punching failure for piles exceeding nominal resistance of 400 kips (1800kN). In addition, a sufficient amount of the flexure reinforcement in the top and bottom mat must be developed beyond the exterior piles to insure tensile capacity is available to resist the horizontal component of the shear-resisting mechanism for the exterior piles.

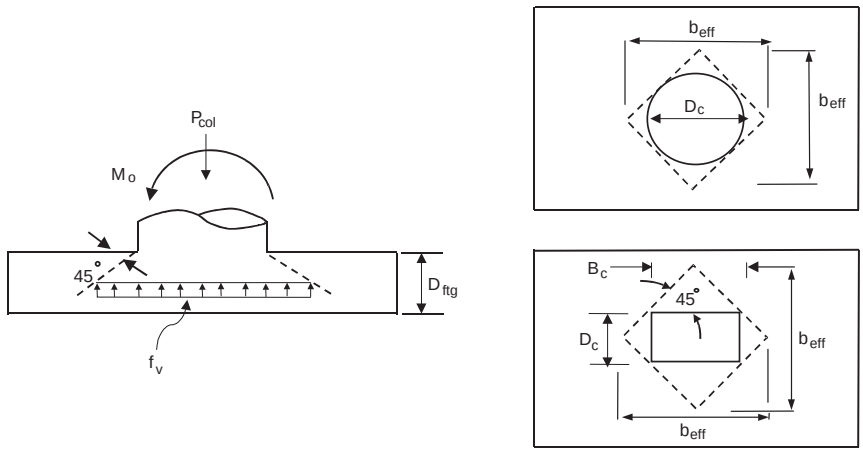


**Figure 7.13 Effective Joint Width for Footing Joint Stress Calculation**

### 7.7.2 Pier Wall Pile Foundations

Typically, it is not economical to design pier wall pile foundations to resist the transverse seismic shear. Essentially elastic response of the wall in the strong direction will induce large foundation demands that may cause inelastic response in the foundation. If this occurs, piles will incur some damage from transverse demands, most likely near the pile head/pile cap connection. Methods for reducing the inelastic damage in pier wall pile foundations include:

- Utilizing ductile pile head details
- Pinning the pier wall-footing connection in the weak direction to reduce the weak axis demand on the piles that may be damaged by transverse demands
- Pinning the pier wall-soffit connection, thereby limiting the demands imparted to the substructure
- Use a ductile system in lieu of the traditional pier wall. For example, columns or pile extensions with isolated shear walls

The method selected to account for or mitigate inelastic behavior in the pier wall foundations shall be discussed at the Type Selection Meeting.

#### *7.7.2.1 Pier Wall Spread Footing Foundations*

If sliding of the pier wall foundation is anticipated, the capacity of the pier wall and foundation must be designed for 130% of a realistic estimate of the sliding resistance at the bottom of the footing.

### 7.7.3 Pile Shafts

#### *7.7.3.1 Shear Demand on Type I Pile Shafts*

Overestimating the equivalent cantilever length of pile shafts will under estimate the shear load corresponding to the plastic capacity of the shaft. The seismic shear force for Type I pile shafts shall be taken as the larger of either the shear reported from the soil/pile interaction analysis when the in-ground plastic hinges forms, or the shear calculated

by dividing the overstrength moment capacity of the pile shaft by $H_s$. Where $H_s$ is defined as the smaller length specified by equation 7.42.

$$H_s \leq \begin{cases} H' + (2 \times D_c) \\ \text{Length of the column/shaft from the point of maximum moment} \\ \text{in the shaft to the point contraflexure in the column} \end{cases} \tag{7.42}$$

#### *7.7.3.2 Flexure Demand/Capacity Requirements for Type II Pile Shafts*

The distribution of moment along a pile shaft is dependent upon the geotechnical properties of the surrounding soil and the stiffness of the shaft. To ensure the formation of plastic hinges in columns and to minimize the damage to type II shafts a factor of safety of 1.25 shall be used in the design of Type II shafts. This factor also accommodates the uncertainty associated with estimates on soil properties and stiffness. The expected nominal moment capacity $M_{ne}^{typeII}$, at any location along the shaft, must be at least 1.25 times the moment demand generated by the overstrength moment applied at the base of the column. Increasing the pile shaft's capacity to meet the overstrength requirement will affect the moment demand in the shaft. This needs to be considered and may require iteration to achieve the specified overstrength.

#### *7.7.3.3 Pile Shaft Diameter*

Pile shaft construction practice often requires the use of temporary casing (straight or telescoping) especially in the upper 20 feet (6 m). Pile shafts diameters are commonly 6 inches (150 mm) larger than specified when straight casing is used, and 1 foot (300 mm) larger for each piece of telescoping casing. The effect of oversized shafts on the foundation's performance should be considered.

#### *7.7.3.4 Minimum Pile Shaft Length*

Pile shafts must have sufficient length to ensure stable load-deflection characteristics.

#### *7.7.3.5 Enlarged Pile Shafts*

Type II shafts typically are enlarged relative to the column diameter to contain the inelastic action to the column. Enlarged shafts shall be at least 18 inches (450 mm) larger than the column diameter and the reinforcement shall satisfy the clearance requirements for CIP piling specified in Bridge Design Details 13-22.

### 7.7.4 Pile Extensions

Pile extensions must perform in a ductile manner and meet the ductility requirements of column elements specified in Section 4.1.

## 7.8 Abutments

### 7.8.1 Longitudinal Abutment Response

The linear elastic demand model shall include an effective abutment stiffness, $K_{eff}$ that accounts for expansion gaps, and incorporates a realistic value for the embankment fill response. The abutment embankment fill stiffness is nonlinear and is dependent upon on the material properties of the abutment backfill. Based on passive earth pressure tests and the force deflection results from large-scale abutment testing at UC Davis, the initial embankment fill stiffness is $K_i \approx 20\,\frac{\text{kip/in}}{\text{ft}}$ ($11.5\,\frac{kN/mm}{m}$). The initial stiffness[15] shall be adjusted proportional to the backwall/diaphragm height, as documented in Equation 7.43.

$$K_{abut} = \begin{cases} K_i \times w \times \left(\dfrac{h}{5.5}\right) & \text{U.S. units} \\ K_i \times w \times \left(\dfrac{h}{1.7}\right) & \text{S.I. units} \end{cases} \tag{7.43}$$

Where, $w$ is the width of the backwall or the diaphragm for seat and diaphragm abutments, respectively.

The passive pressure resisting the movement at the abutment increases linearly with the displacement, as shown in Figure 7.14A. The maximum passive pressure of 5.0 ksf (239 kPa), presented in Equation 7.44 is based on the ultimate static force developed in the full scale abutment testing conducted at UC Davis [Maroney, 1995]. The height proportionality factor, $h/5.5\ ft\ \left(h/1.7\ m\right)$ is based on the height of the UC Davis abutment specimen 5.5 ft (1.7 m).

$$P_{bw}\ or\ P_{dia} = \begin{cases} A_e \times 5.0\ ksf \times \left(\dfrac{h_{bw}\ or\ h_{dia}}{5.5}\right) & (ft, kip) \\ A_e \times 239\ kPa \times \left(\dfrac{h_{bw}\ or\ h_{dia}}{1.7}\right) & (m, kN) \end{cases} \tag{7.44}$$

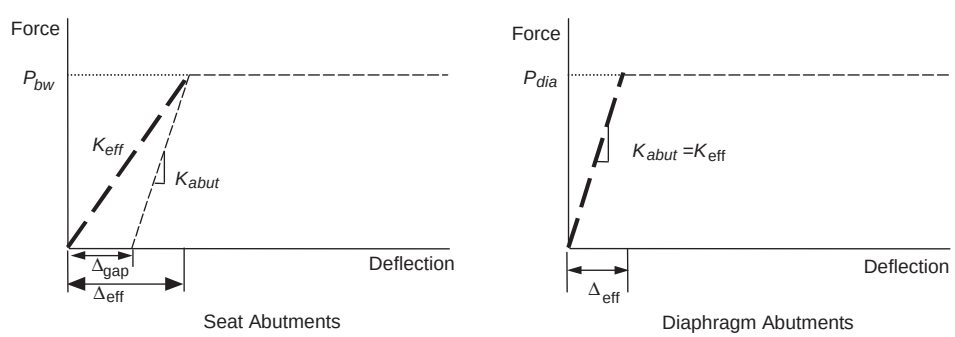


**Figure 7.14A Effective Abutment Stiffness**

The effective abutment area for calculating the ultimate longitudinal force capacity of an abutment is presented in Equation 7.45.

[15] This proportionality may be revised in future as more data becomes available.

For seat abutments the backwall is typically designed to break off in order to protect the foundation from inelastic action. The area considered effective for mobilizing the backfill longitudinally is equal to the area of the backwall.

For diaphragm abutments the entire diaphragm, above and below the soffit, is typically designed to engage the backfill immediately when the bridge is displaced longitudinally. Therefore, the effective abutment area is equal to the entire area of the diaphragm. If the diaphragm has not been designed to resist the passive earth pressure exerted by the abutment backfill, the effective abutment area is limited to the portion of the diaphragm above the soffit of the girders.

$$A_e = \begin{cases} h_{bw} \times w_{bw} & \text{Seat Abutments} \\ h_{dia} \times w_{dia} & \text{Diaphragm Abutments} \end{cases} \tag{7.45}$$

$h_{dia} = h_{dia}^{*}$ = Effective height if the diaphragm is not designed for full soil pressure (see Figure 7.14B).

$h_{dia} = h_{dia}^{**}$ = Effective height if the diaphragm is designed for full soil pressure (see Figure 7.14B).

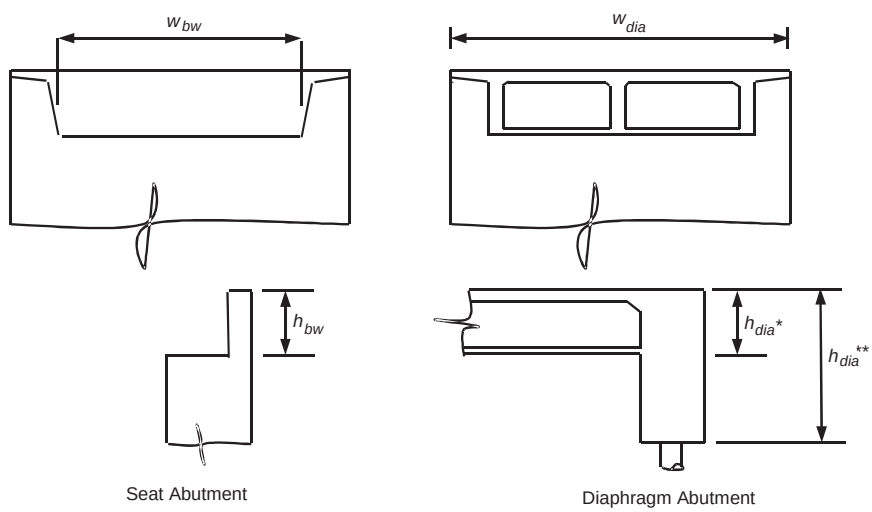


**Figure 7.14B Effective Abutment Area**

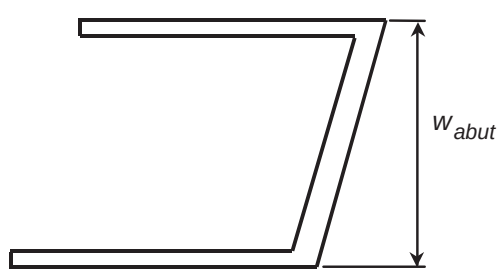


**Figure 7.14C Effective Abutment Width for Skewed Bridges**

The abutment displacement coefficient $R_A$ shall be used in the assessment of the effectiveness of the abutment.

$$R_A = \Delta_D / \Delta_{eff}$$

where:

$\Delta_D$ = The longitudinal displacement demand at the abutment from elastic analysis.

$\Delta_{eff}$ = The effective longitudinal abutment displacement at idealized yield.

If $R_A \leq 2$ The elastic response is dominated by the abutments. The abutment stiffness is large relative to the stiffness of the bents or piers. The column displacement demands generated by the linear elastic model can be used directly to determine the displacement demand and capacity assessment of the bents or piers

If $R_A \geq 4$ The elastic model is insensitive to the abutment stiffness. The abutment contribution to the overall bridge response is small and the abutments are insignificant to the longitudinal seismic performance. The bents and piers will sustain significant deformation. The effective abutment stiffness $K_{eff}$ in the elastic model shall be reduced to a minimum residual stiffness $K_{res}$, and the elastic analysis shall be repeated for revised column displacements. The residual spring has no relevance to the actual stiffness provided by the failed backwall or diaphragm but should suppress unrealistic response modes associated with a completely released end condition.

$$K_{res} \approx 0.1 * K_{eff}$$

If $2 < R_A < 4$ The abutment stiffness in the elastic model shall be adjusted by interpolating effective abutment stiffness between $K_{eff}$ and the residual stiffness $K_{res}$ based on the $R_A$ value. The elastic analysis shall be repeated to obtain revised column displacements.

### 7.8.2 Transverse Abutment Response

Seat type abutments are designed to resist transverse service load and moderate earthquake demands elastically. Typically seat abutments cannot be elastically designed to resist MCE demands because linear analysis cannot capture the inelastic response of the shear keys, wingwalls, or piles. The lateral capacity of seat abutments should not be considered effective for the MCE unless the designer can demonstrate the force-deflection characteristics and stiffness for each element that contributes to the transverse resistance.

The magnitude of the transverse abutment stiffness and the resulting displacement is most critical in the design of the adjacent bent, not the abutment itself. Reasonable transverse displacement of superstructure relative to the abutment seat can easily be accommodated without catastrophic consequences. A nominal transverse spring, $K_{nom}$ equal to 50% of the transverse stiffness of the adjacent bent shall be used in the elastic demand assessment models. The nominal spring has no relevance to the actual residual stiffness provided by the failed shear key but should suppress unrealistic response modes associated with a completely released end condition. This approach is consistent with the stand-alone push analysis design of the adjacent bent and it is conservative since larger amounts of lateral resistance at the abutments that are not captured by the nominal spring will only reduce the transverse displacement demands at the bents. Any additional element, such as pile shafts (used for transverse ductility), shall be included in the transverse analysis with a characteristic force-deflection curve. The initial slope of the force-deflection curve shall be included in the elastic demand assessment model.

Diaphragm type abutments supported on standard piles surrounded by dense material can conservatively be estimated, ignoring the wingwalls, as 40 kips/in ( $7.0\ {}^{kN}/_{mm}$ ) per pile.

### 7.8.3 Abutment Seat Width

Sufficient abutment seat width shall be available to accommodate the anticipated thermal movement, prestress shortening, creep, shrinkage, and the relative longitudinal earthquake displacement. The seat width normal to the centerline of bearing shall be calculated by equation 7.46 but not less than 30 inches (760 mm).

$$N_A \geq \begin{cases} \left(\Delta_{p/s} + \Delta_{cr+sh} + \Delta_{temp} + \Delta_{eq} + 4\right) & \text{(in)} \\ \left(\Delta_{p/s} + \Delta_{cr+sh} + \Delta_{temp} + \Delta_{eq} + 100\right) & \text{(mm)} \end{cases} \tag{7.46}$$

$N_A$ = Abutment seat width normal to the centerline of bearing

$\Delta_{p/s}$ = Displacement attributed to pre-stress shortening

$\Delta_{cr+sh}$ = Displacement attributed to creep and shrinkage

$\Delta_{temp}$ = Displacement attributed to thermal expansion and contraction

$\Delta_{eq}$ = The largest relative earthquake displacement between the superstructure and the abutment calculated by the global or stand-alone analysis

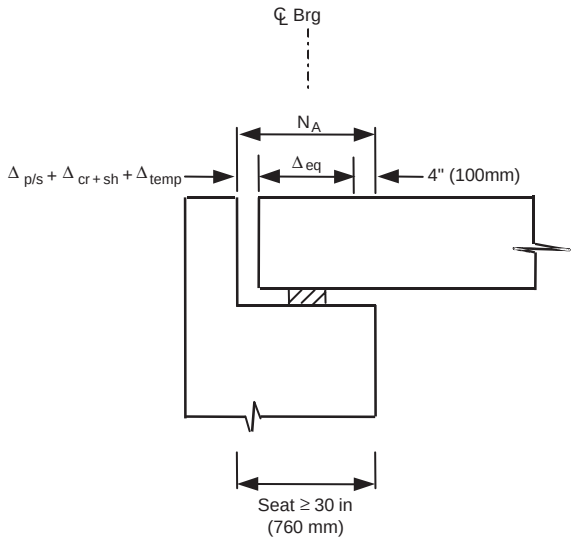


**Figure 7.15 Abutment Seat Width Requirements**

The "Seat Width" requirements due to the service load considerations (Caltrans Bridge Design Specifications and AASHTO requirements) shall also be met.

### 7.8.4 Abutment Shear Key Design

Typically abutment shear keys are expected to transmit the lateral shear forces generated by small earthquakes and service loads. Determining the earthquake force demand on shear keys is difficult. The forces generated with elastic

demand assessment models should not be used to size the abutment shear keys. Shear key capacity for seat abutments shall be limited to the smaller of the following:

$$F_{sk} \leq \begin{cases} .75 \times \sum V_{pile} & \sum V_{pile} = \text{Sum of the lateral pile capacity} \\ 0.3 \times P_{dl}^{\sup} & P_{dl}^{\sup} = \text{Axial dead load reaction at the abutment} \end{cases} \tag{7.47}$$

Note that the shear keys for abutments supported on spread footings are only designed to $0.3P^{sup}_{dl}$.

Wide bridges may require internal shear keys to insure adequate lateral resistance is available for service load and moderate earthquakes. Internal shear keys should be avoided whenever possible because of maintenance problems associated with premature failure caused by binding due to the superstructure rotation or shortening.

# 8. SEISMIC DETAILING

## 8.1 Splices in Reinforcing Steel

### 8.1.1 No Splice Regions in Ductile Components

Splicing of flexural reinforcement is not permitted in critical locations of ductile elements. The “no splice” region shall be the greater of: The length of the plastic hinge region as defined in Section 7.6.3 or the portion of the column where the moment demand exceeds $M_y$. A “no splice” region shall be clearly identified on the plans for both hinge locations of fixed-fixed columns.

### 8.1.2 Reinforcement Spliced in Ductile Components & Components Expected to Accept Damage

Reinforcing steel splices in ductile components outside of the “no splice” region shall meet the “ultimate splice” performance requirements identified in Memo to Designers 20-9.

### 8.1.3 Reinforcement Spliced in Capacity Protected Members

Reinforcing steel splices designed to meet the SDC requirements in capacity protected components shall meet the “service splice” requirements identified in MTD 20-9. The designer may choose to upgrade the splice capacity from service level to ultimate level in capacity protected components where the reinforcing steel strains are expected to significantly exceed yield. These locations are usually found in elements that are critical to ductile performance such as bent caps, footings, and enlarged pile shafts.

### 8.1.4 Hoop and Spiral Reinforcement Splices

Ultimate splices are required for all spiral and hoop reinforcement in ductile components. Splicing of spiral reinforcement is not permitted in the “no splice” regions of ductile components as defined in Section 8.1.1. Spiral splicing outside the “no splice” regions of ductile components shall meet the ultimate splice requirements.

## 8.2 Development of Longitudinal Column Reinforcement

Refer to Chapter 8 in the Bridge Design Specifications for the development requirements for all reinforcement not addressed in this Section.

### 8.2.1 Minimum Development Length of Reinforcing Steel for Seismic Loads

Column longitudinal reinforcement shall be extended into footings and cap beams as close as practically possible to the opposite face of the footing or cap beam.

If the joint shear reinforcement prescribed in Section 7.4.4.2, and the minimum bar spacing requirements in BDS 8.21 are met, the anchorage for longitudinal column bars developed into the cap beam for seismic loads shall not be less than the length specified in equation 8.1[1]:

$$l_{ac} = 24 d_{bl} \qquad \text{(in, or mm)} \tag{8.1}$$

The anchorage length calculated in equation 8.1 cannot be reduced by adding hooks or mechanical anchorage devices.

The reinforcing development requirements in other Caltrans documents must be met for all load cases other than seismic.

The column reinforcement shall be confined along the development length $l_{ac}$ by transverse hoops or spirals with the same volumetric ratio as required at the top of the column. If the joint region is not confined by solid adjacent members or prestressing, the volumetric ratio of the confinement along $l_{ac}$ shall not be less than the value specified by equation 8.2.

$$\rho_s = \frac{0.6 \times \rho_l \times D_c}{l_{ac}} \tag{8.2}$$

### 8.2.2 Anchorage of Bundled Bars in Ductile Components

The anchorage length of individual column bars within a bundle anchored into a cap beam shall be increased by twenty percent for a two-bar bundle and fifty percent for a three-bar bundle. Four-bar bundles are not permitted in ductile elements.

### 8.2.3 Flexural Bond Requirements for Columns

#### *8.2.3.1 Maximum Bar Diameter*

The nominal diameter of longitudinal reinforcement in columns shall not exceed the value specified by equation 8.3.

$$d_{bl} = 25 \times \sqrt{f'_c} \times \frac{L_b}{f_{ye}} \qquad \text{(in, psi)}$$

$$d_{bl} = 2.1 \times \sqrt{f'_c} \times \frac{L_b}{f_{ye}} \qquad \text{(mm, MPa)} \tag{8.3}$$ [16]

[16] $f'_c$ rather than $f'_{ce}$ is used in equation 8.3 to ensure conservative results. [7]

$$L_b = L - 0.5 \times D_c \tag{8.4}$$

$L$ = Length of column from the point of maximum moment to the point of contra-flexure

Where longitudinal bars in columns are bundled, equation 8.3 shall apply to the nominal effective diameter $d_{bb}$ of the bundle, taken as $1.2 \times d_{bl}$ for two- bar bundles, and $1.5 \times d_{bl}$ for three-bar bundles.

### 8.2.4 Development Length for Column Reinforcement Extended Into Enlarged Type II Shafts

Column longitudinal reinforcement shall be extended into enlarged shafts in a staggered manner with the minimum recommended embedment lengths of $2 \times D_{c,\max}$ and $3 \times D_{c,\max}$, where $D_{c,\max}$ is the larger cross section dimension of the column. This practice ensures adequate anchorage in case the plastic hinge damage penetrates into the shaft.

### 8.2.5 Maximum Spacing for Lateral Reinforcement

The maximum spacing for lateral reinforcement in the plastic end regions shall not exceed the smallest of the following:

- One fifth of the least dimension of the cross-section for columns and one-half of the least cross-section dimension of piers
- Six times the nominal diameter of the longitudinal reinforcement
- 8 inches (220 mm)

# APPENDIX A - NOTATIONS & ACRONYMS

| | | |
|---|---|---|
| $A_b$ | = | Area of individual reinforcing steel bar (in$^2$, mm$^2$) (Section 3.8.1) |
| $A_e$ | = | Effective shear area (Section 3.6.2) |
| $A_g$ | = | Gross cross section area (in$^2$, mm$^2$) (Section 3.6.2) |
| $A_{jh}$ | = | The effective horizontal area of a moment resisting joint (Section 7.4.4.1) |
| $A_{jh}^{ftg}$ | = | The effective horizontal area for a moment resisting footing joint (Section 7.7.1.4) |
| $A_{jv}$ | = | The effective vertical area for a moment resisting joint (Section 7.4.4.1) |
| $A_{jv}^{ftg}$ | = | The effective vertical area for a moment resisting footing joint (Section 7.7.1.4) |
| $A_s$ | = | Area of supplemental non-prestressed tension reinforcement (Section 4.3.2.2) |
| $A'_s$ | = | Area of supplemental compression reinforcement (Section 4.3.2.2) |
| $A_s^{jh}$ | = | Area of horizontal joint shear reinforcement required at moment resisting joints (Section 7.4.4.3) |
| $A_s^{jv}$ | = | Area of vertical joint shear reinforcement required at moment resisting joints (Section 7.4.4.3) |
| $A_s^{j\text{-}bar}$ | = | Area of vertical j-bar reinforcement required at moment resisting joints with a skew angle >20° (Section 7.4.4.3) |
| ARS | = | 5% damped elastic Acceleration Response Spectrum, expressed in terms of *g* (Section 2.1) |
| $A_s^{sf}$ | = | Area of bent cap side face steel required at moment resisting joints (Section 7.4.4.3) |
| $A_{st}$ | = | Area of longitudinal column steel anchored in the joint (Section 7.4.4.3) |
| ASTM | = | American Society for Testing Materials |
| $A_v$ | = | Area of shear reinforcement perpendicular to flexural tension reinforcement (Section 3.6.3) |
| $B_{cap}$ | = | Bent cap width (Section 7.3.1.1) |
| $B_{eff}$ | = | Effective width of the superstructure for resisting longitudinal seismic moments (Section 7.2.1.1) |
| $B_{eff}^{ftg}$ | = | Effective width of the footing for calculating average normal stress in the horizontal direction within a footing moment resisting joint (Section 7.7.1.4) |
| BDS | = | Caltrans Bridge Design Specification (Section 3.2.1) |
| $C_{(i)}^{pile}$ | = | Axial compression demand on a pile (Section 7.7.1.1) |
| CIDH | = | Cast-in-drilled-hole pile (Section 1.2) |
| CISS | = | Cast-in-steel-shell pile (Section 1.2) |
| $D_c$ | = | Column cross sectional dimension in the direction of interest (Section 3.1.4.1) |
| $D_{c.g.}$ | = | Distance from the top of column the center of gravity of the superstructure (Section 4.3.2.1) |
| $D_{c,max}$ | = | Largest cross sectional dimension of the column (Section 8.2.4) |

| | | |
|---|---|---|
| $D_{ftg}$ | = | Depth of footing (Section 7.7.1.1) |
| $D_{Rs}$ | = | Depth of resultant soil resistance measured from top of footing (Section 7.7.1.1) |
| $D_s$ | = | Depth of superstructure at the bent cap (Section 7.2.1.1) |
| $D'$ | = | Cross-sectional dimension of confined concrete core measured between the centerline of the peripheral hoop or spiral. (Section 3.6.3) |
| $D^*$ | = | Cross-sectional dimension of pile shaft in the direction of interest (Section 7.6.2) |
| $E_c$ | = | Modulus of elasticity of concrete (psi, MPa) (Section 3.2.6) |
| EDA | = | Elastic Dynamic Analysis (Section 2.2.1) |
| $E_s$ | = | Modulus of elasticity of steel (psi, MPa) (Section 3.2.3) |
| ESA | = | Equivalent Static Analysis (Section 2.2.1) |
| $F_{sk}$ | = | Abutment shear key force capacity (Section 7.8.4) |
| $G$ | = | The gap between an isolated flare and the soffit of the bent cap (Section 7.6.2) |
| $G_c$ | = | Shear modulus (modulus of rigidity) for concrete (ksi, MPa) (Section 5.6.1) |
| GS | = | Geotechnical Services |
| $H$ | = | Average height of column supporting bridge deck between expansion joints (Section 7.8.3) |
| $H'$ | = | Length of pile shaft/column from ground surface to the point of zero moment above ground (Section 7.6.2) |
| $H_s$ | = | Length of column/shaft from the pint of maximum moment in the shaft to the point of contraflexure in the column (Section 7.7.4.1) |
| $I_{c.g.}$ | = | Moment of inertia of the pile group (Section 7.7.1.1) |
| $I_{eff}$ | = | Effective moment of inertia for computing member stiffness (Section 5.6.1) |
| $I_g$ | = | Moment of inertia about centroidal axis of the gross section of the member (Section 5.6.1) |
| ISA | = | Inelastic Static Analysis (Section 5.2.3) |
| $J_{eff}$ | = | Effective polar moment of inertia for computing member stiffness (Section 5.6.1) |
| $J_g$ | = | Gross polar moment of inertia about centroidal axis of the gross section of the member (Section 5.6.1) |
| $K_{eff}$ | = | Effective abutment backwall stiffness $\frac{\text{kip/in}}{\text{ft}}$ ( $\frac{\text{kN/mm}}{\text{m}}$ ) (Section 7.8.1) |
| $K_i$ | = | Initial abutment backwall stiffness (Section 7.8.1) |
| $L$ | = | Member length from the point of maximum moment to the point of contra-flexure (ft, m) (Section 3.1.3) |
| $L$ | = | Length of bridge deck between adjacent expansion joints (Section 7.8.3) |
| $L_b$ | = | Length used for flexural bond requirements (Section 8.2.3.1) |
| $L_p$ | = | Equivalent analytical plastic hinge length (ft, m) (Section 3.1.3) |
| $L_{pr}$ | = | Plastic hinge region which defines the region of a column or pier that requires enhanced lateral confinement (Section 7.6.2) |

| | | |
|---|---|---|
| $L_{ftg}$ | = | Cantilever length of the footing or pile cap measured from face of column to edge of footing along the principal axis of the footing (Section 7.7.1.3) |
| MCE | = | Maximum Credible Earthquake (Section 2.1) |
| $M_{dl}$ | = | Moment attributed to dead load (Section 4.3.2.1) |
| $M_{eq}^{col}$ | = | The column moment when coupled with any existing $M_{dl}$ & $M_{p/s}$ will equal the column's overstrength moment capacity, $M_o^{col}$ (Section 4.3.2) |
| $M_{eq}^{R,L}$ | = | Portion of $M_{eq}^{col}$ distributed to the left or right adjacent superstructure spans (Section 4.3.2.1) |
| METS | = | Materials Engineering and Testing Services |
| $M_{(i)}^{pile}$ | = | The moment demand generated in pile ($i$) (Section 7.7.1.1) |
| $M_m$ | = | Earthquake moment magnitude (Section 6.1.2.2) |
| $M_{p/s}$ | = | Moment attributed to secondary prestress effects (Section 4.3.2) |
| $M_n$ | = | Nominal moment capacity based on the nominal concrete and steel strengths when the concrete strain reaches 0.003. |
| $M_{ne}$ | = | Nominal moment capacity based on the expected material properties and a concrete strain, $\varepsilon_c$= 0.003 (Section 3.4) |
| $M_{ne}^{sup\,R,L}$ | = | Expected nominal moment capacity of the right and left superstructure spans utilizing expected material properties (Section 4.3.2.1) |
| $M_{ne}^{typeII}$ | = | Expected nominal moment capacity of a type II pile shaft (Section 7.7.4.2) |
| $M_o^{col}$ | = | Column overstrength moment (Section 2.3.1) |
| $M_p^{col}$ | = | Idealized plastic moment capacity of a column calculated by $M$-$\phi$ analysis (kip-ft, N-m) (Section 2.3.1) |
| $M_y$ | = | Moment capacity of a ductile component corresponding to the first reinforcing bar yielding (Section 5.6.1.1) |
| $M$-$\phi$ | = | Moment curvature analysis (Section 3.1.3) |
| MTD | = | Memo to Designers (Section 1.1) |
| $N$ | = | Blow count per foot (0.3m) for the California Standard Penetration Test (Section 6.1.3) |
| $N_A$ | = | Abutment support width normal to centerline of bearing (Section 7.8.3) |
| $N_p$ | = | Total number of piles in a footing (Section 7.7.1.1) |
| OSD | = | Offices Of Structure Design (Section 1.1) |
| $P_b$ | = | The effective axial force at the center of the joint including prestress (Section 7.4.4.1) |
| $P_c$ | = | The column axial force including the effects of overturning (Section 3.6.2) |
| $P_{dl}$ | = | Axial load attributed to dead load (Section 3.5) |
| $P_{dl}^{sup}$ | = | Superstructure axial load resultant at the abutment (Section 7.8.4) |
| PGR | = | Preliminary Geology Report (Section 2.1) |
| P/S | = | Prestressed Concrete (i.e. P/S concrete, P/S strand) (Section 2.1.4) |
| $R_D$ | = | Displacement reduction factor for damping ratios exceeding 5% (Section 2.1.5) |

| | | |
|---|---|---|
| $R_s$ | = | Total resultant expected soil resistance along the end and sides of a footing (Section 7.7.1.1) |
| $S$ | = | Skew angle of abutment (Section 7.8.2) |
| SDC | = | Seismic Design Criteria (Section 1.1) |
| SDSEE | = | Structure Design Services and Earthquake Engineering |
| $T$ | = | Natural period of vibration, in seconds T = $2\pi\sqrt{m/k}$ (Section 6.1.2.1) |
| $T_c$ | = | Total tensile force in column longitudinal reinforcement associated with $M_o^{col}$ (Section 7.4.4.1) |
| $T_{(i)}^{pile}$ | = | Axial tension demand on a pile (Section 7.7.1.1) |
| $T_{jv}$ | = | Net tension force in moment resisting footing joints (Section 7.7.2.2) |
| $V_c$ | = | Nominal shear strength provided by concrete (Section 3.6.1) |
| $V_{(i)}^{pile}$ | = | Shear demand on a pile (Section 7.7.1.1) |
| $V_n$ | = | Nominal shear strength (Section 3.6.1) |
| $V_{pile}$ | = | Abutment pile shear capacity (Section 7.8.4) |
| $V_s$ | = | Nominal shear strength provided by shear reinforcement (Section 3.6.1) |
| $V_o$ | = | Overstrength shear associated with the overstrength moment $M_o$ (Section 3.6.1) |
| $V_o^{col}$ | = | Column overstrength shear, typically defined as $M_o^{col}/L$ (kips, N) (Section 2.3.1) |
| $V_p^{col}$ | = | Column plastic shear, typically defined as $M_p^{col}/L$ (kips, N) (Section 2.3.2.1) |
| $V_n^{pw}$ | = | Nominal shear strength of pier wall in the strong direction (Section 3.6.6.2) |
| $V_u^{pw}$ | = | Shear demand on a pier wall in the strong direction (Section 3.6.6.2) |
| $c_{(i)}$ | = | Distance from pile ($i$) to the center of gravity of the pile group in the X or Y direction (Section 7.7.1.1) |
| $c$ | = | Damping ratio (Section 2.1.5) |
| $d_{bl}$ | = | Nominal bar diameter of longitudinal column reinforcement (Section 7.6.2) |
| $d_{bb}$ | = | Effective diameter of bundled reinforcement (Section 8.2.3.1) |
| $f_h$ | = | Average normal stress in the horizontal direction within a moment resisting joint (Section 7.4.4.1) |
| $f_{ps}$ | = | Tensile stress for 270 ksi (1900 MPa) 7 wire low relaxation prestress strand (ksi, MPa) (Section 3.2.4) |
| $f_u$ | = | Specified minimum tensile strength for A706 reinforcement (ksi, MPa) (Section 3.2.3) |
| $f_{ue}$ | = | Expected minimum tensile strength for A706 reinforcement (ksi, MPa) (Section 3.2.3) |
| $f_{yh}$ | = | Nominal yield stress of transverse column reinforcement (hoops/spirals) (ksi, Mpa) (Section 3.6.2) |
| $f_v$ | = | Average normal stress in the vertical direction within a moment resisting joint (Section 7.4.4.1) |
| $f_y$ | = | Nominal yield stress for A706 reinforcement (ksi, MPa) (section 3.2.1) |
| $f_{ye}$ | = | Expected yield stress for A706 reinforcement (ksi, MPa) (Section 3.2.1) |
| $f'_c$ | = | Compressive strength of unconfined concrete, (Section 3.2.6) |
| $f'_{cc}$ | = | Confined compression strength of concrete (Section 3.2.5) |
| $f'_{ce}$ | = | Expected compressive strength of unconfined concrete, (psi, MPa) (Section 3.2.1) |

| | | |
|---|---|---|
| $\sqrt{f'_c}$ | = | Square root of the specified compressive strength of concrete, (psi, MPa) (section 3.2.6) |
| $g$ | = | Acceleration due to gravity, $32.2\ \mathrm{ft/sec^2}$ ($9.81\ \mathrm{m/sec^2}$) (Section 1.1) |
| $h_{bw}$ | = | Abutment backwall height (Section 7.8.1) |
| $k_{(i)}{}^e$ | = | Effective stiffness of bent or column ($i$) (Section 7.1.1) |
| $l_{ac}$ | = | Length of column reinforcement embedded into bent cap (Section 7.4.4.1) |
| $l_b$ | = | Length used for flexural bond requirements (Section 8.2.2.1) |
| $m_{(i)}$ | = | Tributary mass associated with column or bent ($i$), m = W/g (kip-sec$^2$/ft, kg) (Section 7.1.1) |
| $n$ | = | The total number of piles at distance $c_{(i)}$ from the center of gravity of the pile group (Section 7.7.1.1) |
| $p_{bw}$ | = | Maximum abutment backwall soil pressure (Section 7.8.1) |
| $p_c$ | = | Nominal principal compression stress in a joint (psi, MPa) (Section 7.4.2) |
| $p_t$ | = | Nominal principal tension stress in a joint (psi, MPa) (Section 7.4.2) |
| $s$ | = | Spacing of shear/transverse reinforcement measured along the longitudinal axis of the structural member (in, mm) (Section 3.6.3) |
| $s_u$ | = | Undrained shear strength (psf, KPa) (Section 6.1.3) |
| $t$ | = | Top or bottom slab thickness (Section 7.3.1.1) |
| $v_{jv}$ | = | Nominal vertical shear stress in a moment resisting joint (psi, MPa) (Section 7.4.4.1) |
| $v_c$ | = | Permissible shear stress carried by concrete (psi, MPa) (Section 3.6.2) |
| $v_s$ | = | Shear wave velocity (ft/sec, m/sec) (Section 6.1.3) |
| $\varepsilon_c$ | = | Specified concrete compressive strain for essentially elastic members (Section 3.4.1) |
| $\varepsilon_{cc}$ | = | Concrete compressive strain at maximum compressive stress of confined concrete (Section 3.2.6) |
| $\varepsilon_{co}$ | = | Concrete compressive strain at maximum compressive stress of unconfined concrete (Section 3.2.6) |
| $\varepsilon_{sp}$ | = | Ultimate compressive strain (spalling strain) of unconfined concrete (Section 3.2.5) |
| $\varepsilon_{cu}$ | = | Ultimate compression strain for confined concrete (Section 3.2.6) |
| $\varepsilon_{ps}$ | = | Tensile strain for 7-wire low relaxation prestress strand (Section 3.2.4) |
| $\varepsilon_{ps,EE}$ | = | Tensile strain in prestress steel at the essentially elastic limit state (Section 3.2.4) |
| $\varepsilon^R{}_{ps,u}$ | = | Reduced ultimate tensile strain in prestress steel (Section 3.2.4) |
| $\varepsilon_{sh}$ | = | Tensile strain at the onset of strain hardening for A706 reinforcement (Section 3.2.3) |
| $\varepsilon_{su}$ | = | Ultimate tensile strain for A706 reinforcement (Section 3.2.3) |
| $\varepsilon_{su}{}^R$ | = | Reduced ultimate tensile strain for A706 reinforcement (Section 3.2.3) |
| $\varepsilon_y$ | = | Nominal yield tensile strain for A706 reinforcement (Section 3.2.3) |
| $\varepsilon_{ye}$ | = | Expected yield tensile strain for A706 reinforcement (Section 3.2.3) |
| $\Delta_b$ | = | Displacement due to beam flexibility (Section 2.2.2) |
| $\Delta_c$ | = | Local member displacement capacity (Section 3.1.2) |
| $\Delta_{col}$ | = | Displacement attributed to the elastic and plastic deformation of the column (Section 2.2.4) |

| | | |
|---|---|---|
| $\Delta_C$ | = | Global displacement capacity (Section 3.1.2) |
| $\Delta_{cr+sh}$ | = | Displacement due to creep and shrinkage (Section 7.2.5.5) |
| $\Delta_d$ | = | Local member displacement demand (Section 2.2.2) |
| $\Delta_D$ | = | Global system displacement (Section 2.2.1) |
| $\Delta_{eq}$ | = | The average displacement at an expansion joint due to earthquake (Section 7.2.5.5) |
| $\Delta_f$ | = | Displacement due to foundation flexibility (Section 2.2.2) |
| $\Delta_p$ | = | Local member plastic displacement capacity (in, mm) (Section 3.1.3) |
| $\Delta_{p/s}$ | = | Displacement due to prestress shortening (Section 7.2.5.5) |
| $\Delta_r$ | = | The relative lateral offset between the point of contra-flexure and the base of the plastic hinge (Section 4.2) |
| $\Delta_s$ | = | The displacement in Type I shafts at the point of maximum moment (Section 4.2) |
| $\Delta_{temp}$ | = | The displacement due to temperature variation (Section 7.2.5.5) |
| $\Delta_Y^{col}$ | = | Idealized yield displacement of the column (Section 2.2.4) |
| $\Delta_Y$ | = | Idealized yield displacement of the subsystem at the formation of the plastic hinge (in, mm) (Section 2.2.3) |
| $\theta_p$ | = | Plastic rotation capacity (radians) (Section 3.1.3) |
| $\rho$ | = | Ratio of non-prestressed tension reinforcement (Section 4.4) |
| $\rho_l$ | = | Area ratio of longitudinal column reinforcement (Section 8.2.1) |
| $\rho_s$ | = | Ratio of volume of spiral or hoop reinforcement to the core volume confined by the spiral or hoop reinforcement (measured out-to-out), $\rho_s = 4 \times A_b / (D' \times s)$ for circular cross sections (Section 3.6.2) |
| $\rho_{fs}$ | = | Area ratio of transverse reinforcement in column flare (Section 7.6.5.3) |
| $\phi$ | = | Strength reduction factor (Section 3.6.1) |
| $\phi_p$ | = | Idealized plastic curvature $(1/\text{mm})$ (Section 3.1.3) |
| $\phi_u$ | = | Ultimate curvature capacity (Section 3.1.3) |
| $\phi_y$ | = | yield curvature corresponding to the yield of the fist tension reinforcement in a ductile component (Section 5.6.1.1) |
| $\phi_Y$ | = | Idealized yield curvature (Section 3.1.3) |
| $\nu_c$ | = | Poisson's ratio of concrete (Section 3.2.6) |
| $\mu_d$ | = | Local displacement ductility demand (Section 3.6.2) |
| $\mu_D$ | = | Global displacement ductility demand (Section 2.2.3) |
| $\mu_c$ | = | Local displacement ductility capacity (Section 3.1.4) |

# APPENDIX B - ARS CURVES

The procedure for developing seismic loading is based on the deterministic ARS approach.

**A:** Peak Rock Acceleration. The deterministic **A** values are obtained from the current Caltrans Seismic Hazard Map [1996]. The peak acceleration values reported on this map are mean values obtained using the 1996 Caltrans attenuation relationships.

**R:** Rock Spectra. The rock spectra **R** are magnitude and distant dependent. The spectral shapes for acceleration values between 0.1 and 0.7g (in 0.1g increments) for three magnitude groups (6.5 ± 0.25, 7.25 ± 0.25, and 8.0 ± 0.25) are shown in Figures B1 through B12. These spectra are for California-type rock and correspond to NEHRP Soil Profile Type B. These curves are a reasonable upper bound of the spectral values obtained using various spectral relationships.

**S:** Site Modification Factors. **S** factors have been developed using the soil profile types and soil amplification factors developed at a workshop on how site response should reflect in seismic code provisions [9], [10]. Table B.1 summarizes the soil profile types, which are the same as those adopted in the 1994 NEHRP Provisions [11].

Recommendations for classifying a site according to soil profile type are contained in the ATC 32 Report [2].

**Table B.1 Soil Profile Types**

| Soil Profile Type | Soil Profile Description[a] |
|---|---|
| A | Hard rock with measured shear wave velocity $\nu_s$ > 5000 ft/s (1,500 m/s) |
| B | Rock with shear wave velocity 2,500 < $\nu_s$ < 5000 ft/s (760m/s < $\nu_s$ < 1,500 m/s) |
| C | Very dense soil and soft rock with shear wave velocity 1,200 < $\nu_s$ < 2,500 ft/s (360m/s < $\nu_s$ < 760 m/s) or with either standard penetration resistance N > 50 or undrained shear strength $s_u \geq$ 2,000 psf (100 kPa) |
| D | Stiff soil with shear wave velocity 600 < $\nu_s$ < 1,200 ft/s (180 m/s < $\nu_s$ < 360 m/s) or with either standard penetration resistance 15 ≤ N ≤ 50 or undrained shear strength 1000 psf ≤ $s_u$ ≤ 2000 psf (50 kPa ≤ $s_u$ ≤ 100 kPa) |
| E | A soil profile with shear wave velocity $\nu_s$ < 600 ft/s (180 m/s) or any profile with more than 10 ft (3 m) of soft clay, defined as soil with plasticity index *PI* > 20, water content $w \geq$ 40 percent, and undrained shear strength $s_u$ < 500 psf (25 kPa) |
| F | Soil requiring site-specific evaluation:<br>1. Soils vulnerable to potential failure or collapse under seismic loading; i.e. liquefiable soils, quick and highly sensitive clays, collapsible weakly-cemented soils<br>2. Peat and/or highly organic clay layers more than 10 ft (3 m) thick<br>3. Very high-plasticity clay (*PI* > 75) layers more than 25 ft (8 m) thick<br>4. Soft-to-medium clay layers more than 120 ft (36 m) thick |

[a] The soil profile types shall be established through properly substantiated geotechnical data.

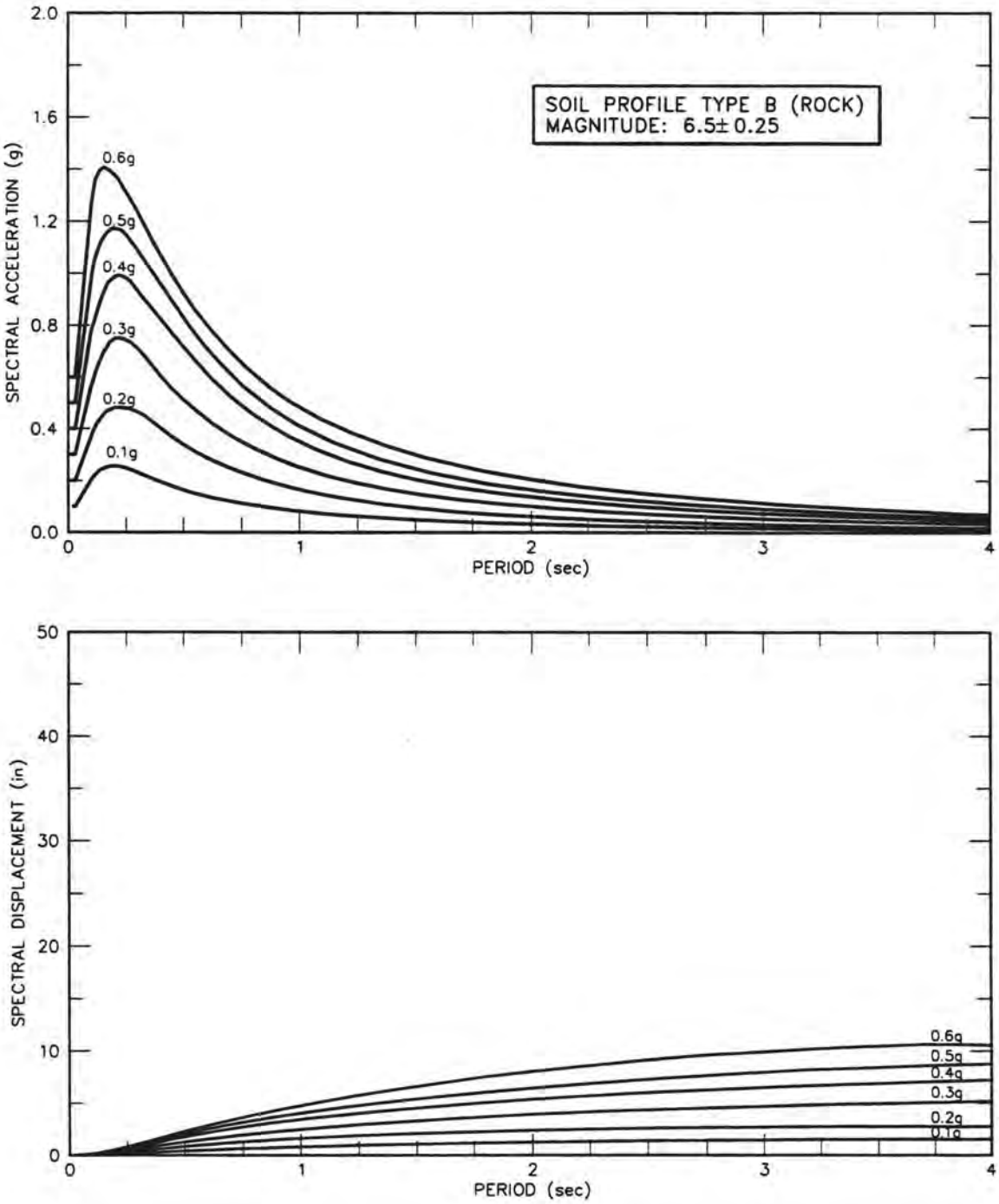


**Figure B.1 Elastic Response Spectra Curves (5% Damping) for Soil Profile Type B (Rock) (M = 6.5 ± 0.25)**

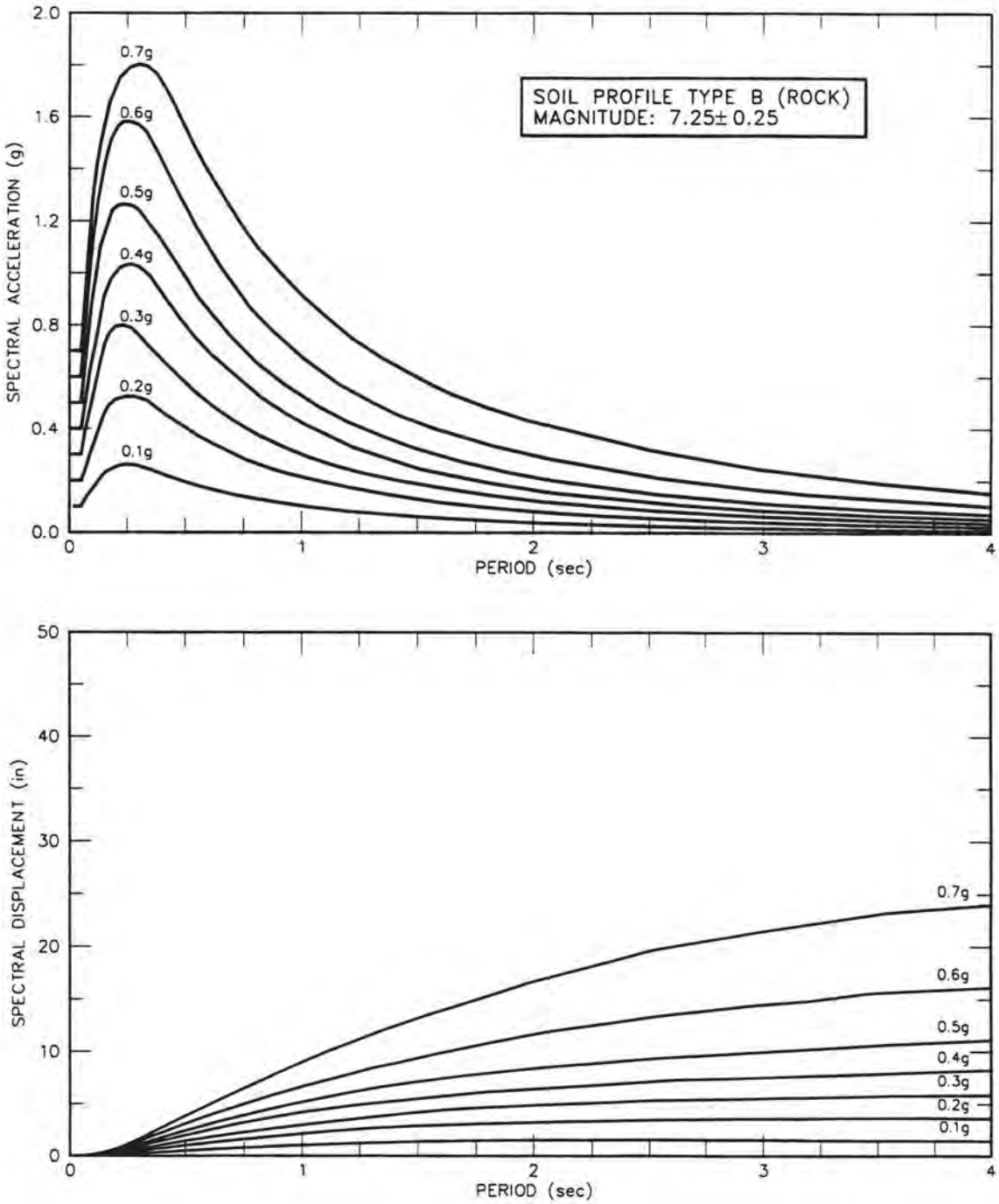


**Figure B.2 Elastic Response Spectra Curves (5% Damping) for Soil Profile Type B (Rock) (M = 7.25 ± 0.25)**

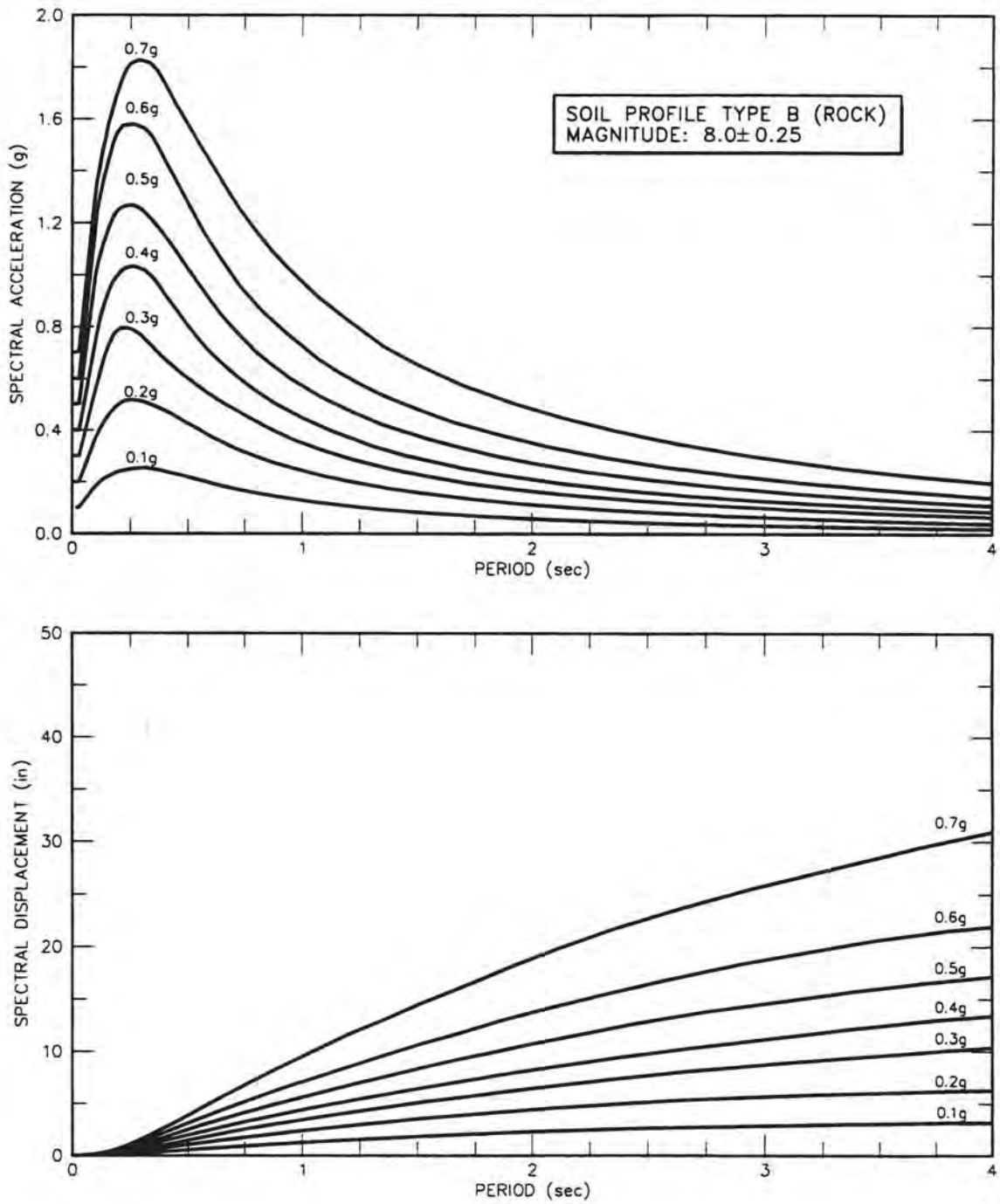


**Figure B.3 Elastic Response Spectra Curves (5% Damping) for Soil Profile Type B (Rock) (M = 8.0 ± 0.25)**

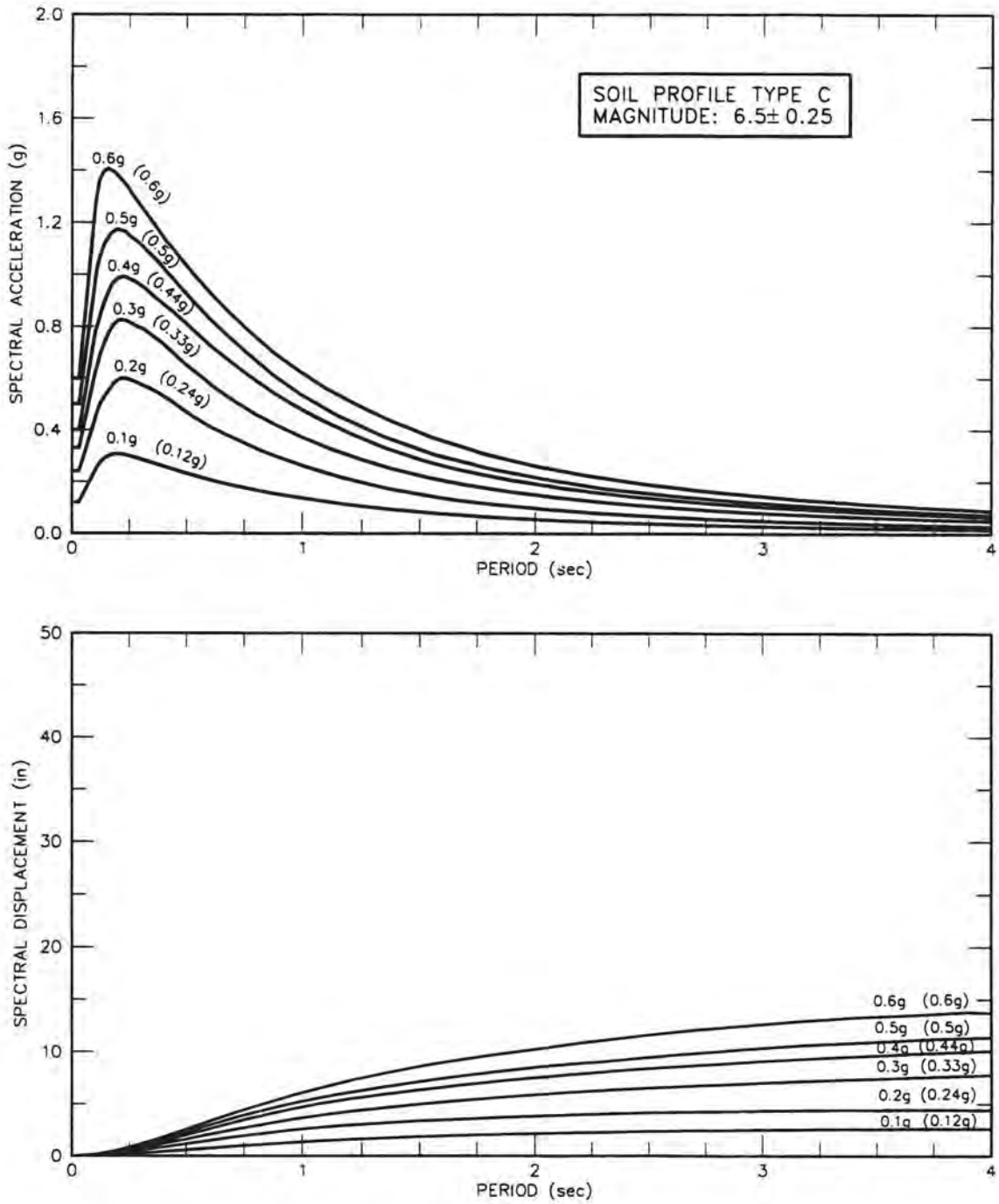


Note: Peak ground acceleration values not in parentheses are for rock (Soil Profile Type B) and peak ground acceleration values in parentheses are for Soil Profile Type C.

**Figure B.4 Elastic Response Spectra Curves (5% Damping) for Soil Profile Type C (M = 6.5 ± 0.25)**

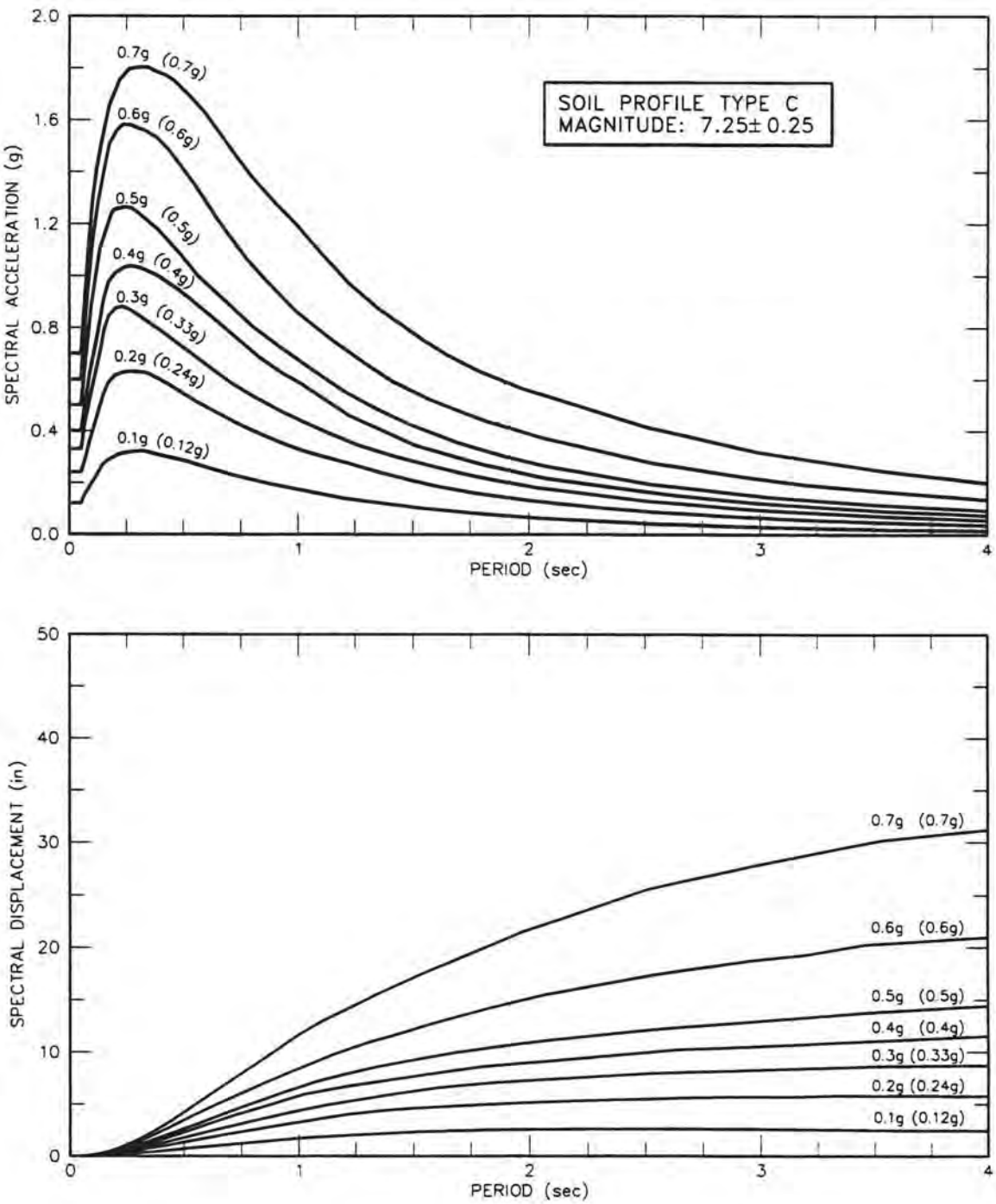


Note: Peak ground acceleration values not in parentheses are for rock (Soil Profile Type B) and peak ground acceleration values in parentheses are for Soil Profile Type C.

**Figure B.5 Elastic Response Spectra Curves (5% Damping) for Soil Profile Type C (M = 7.25 ± 0.25)**

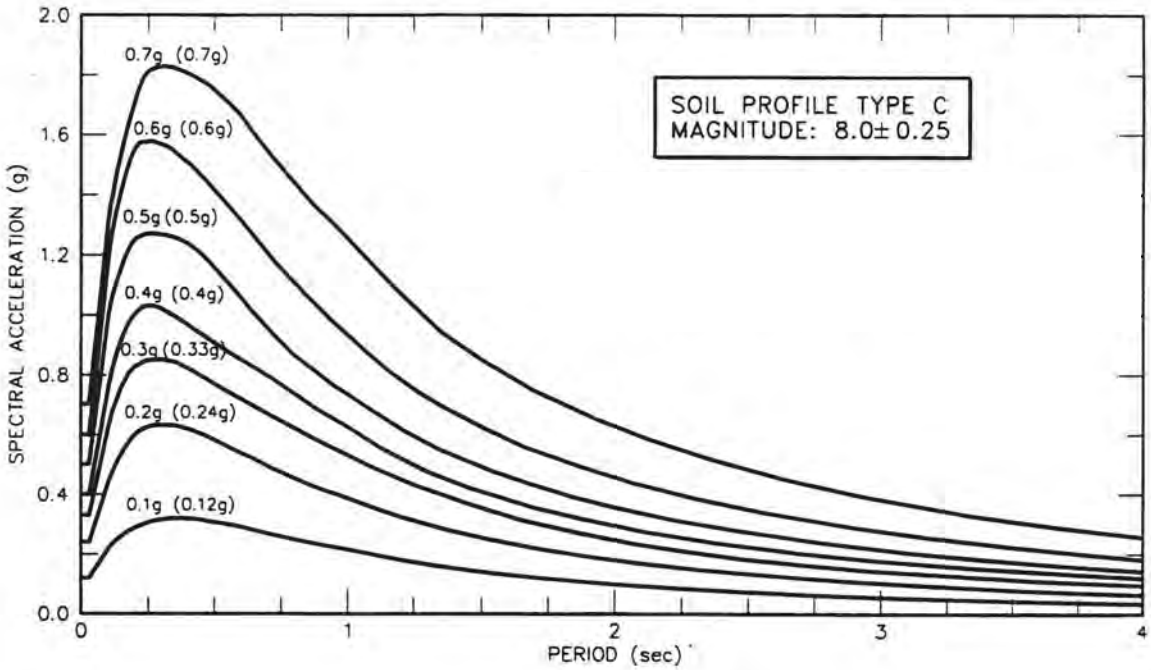


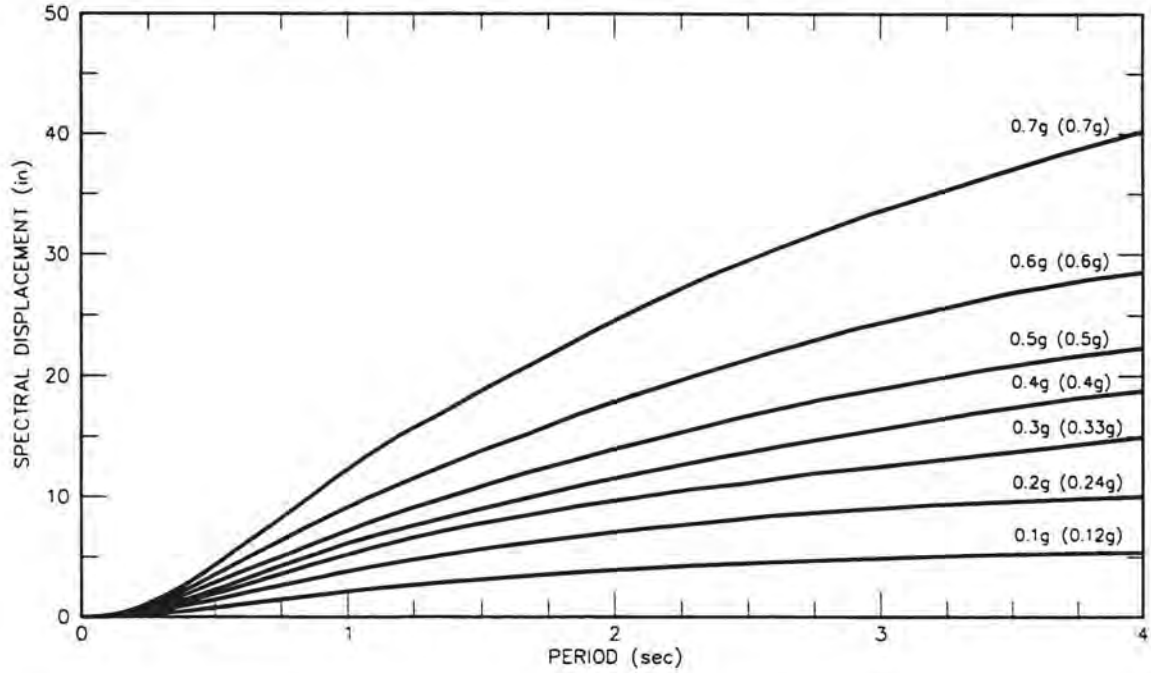


Note: Peak ground acceleration values not in parentheses are for rock (Soil Profile Type B) and peak ground acceleration values in parentheses are for Soil Profile Type C.

**Figure B.6 Elastic Response Spectra Curves (5% Damping) for Soil Profile Type C (M = 8.0 ± 0.25)**

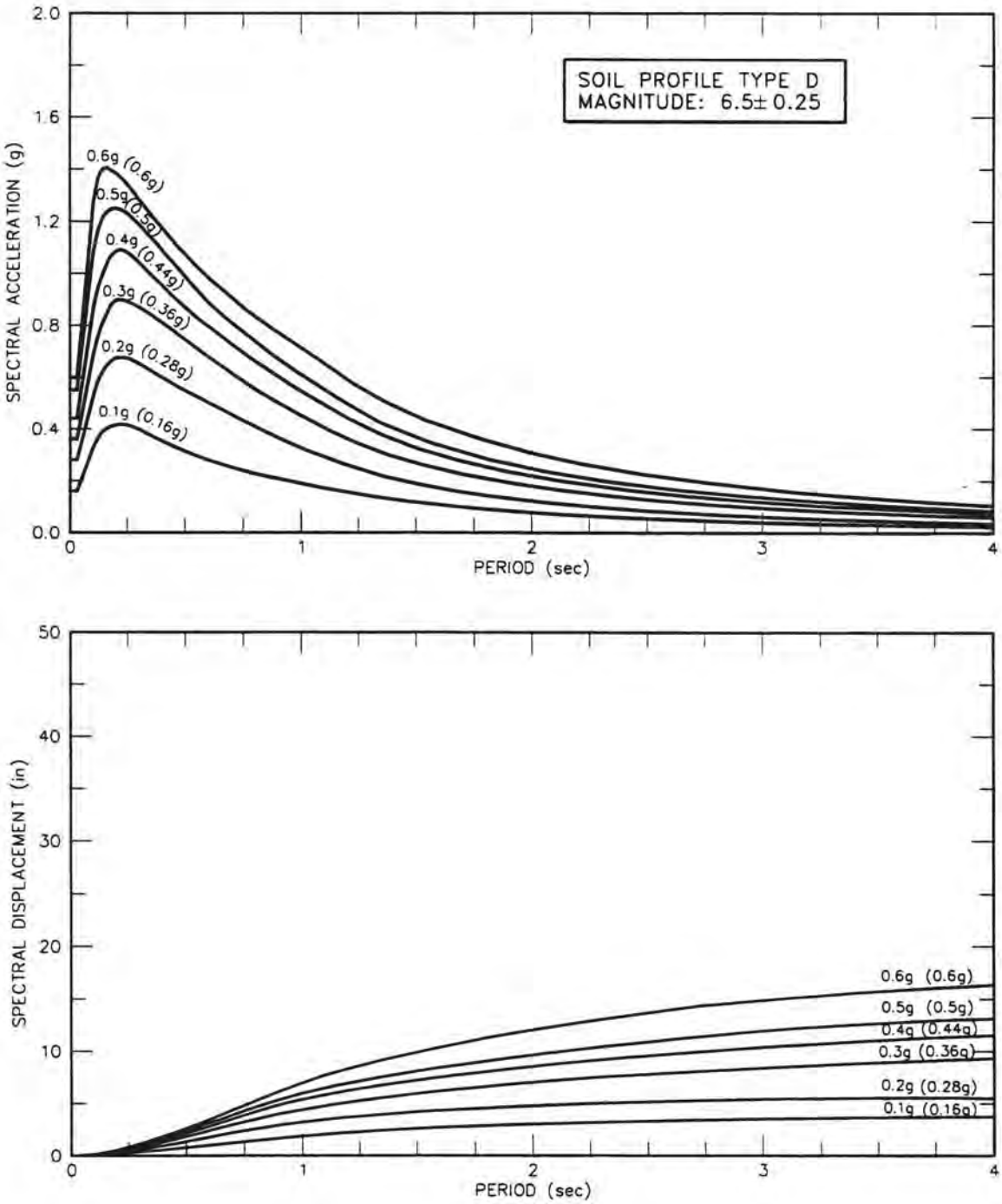


Note: Peak ground acceleration values not in parentheses are for rock (Soil Profile Type B) and peak ground acceleration values in parentheses are for Soil Profile Type D.

**Figure B.7 Elastic Response Spectra Curves (5% Damping) for Soil Profile Type D (M = 6.5 ± 0.25)**

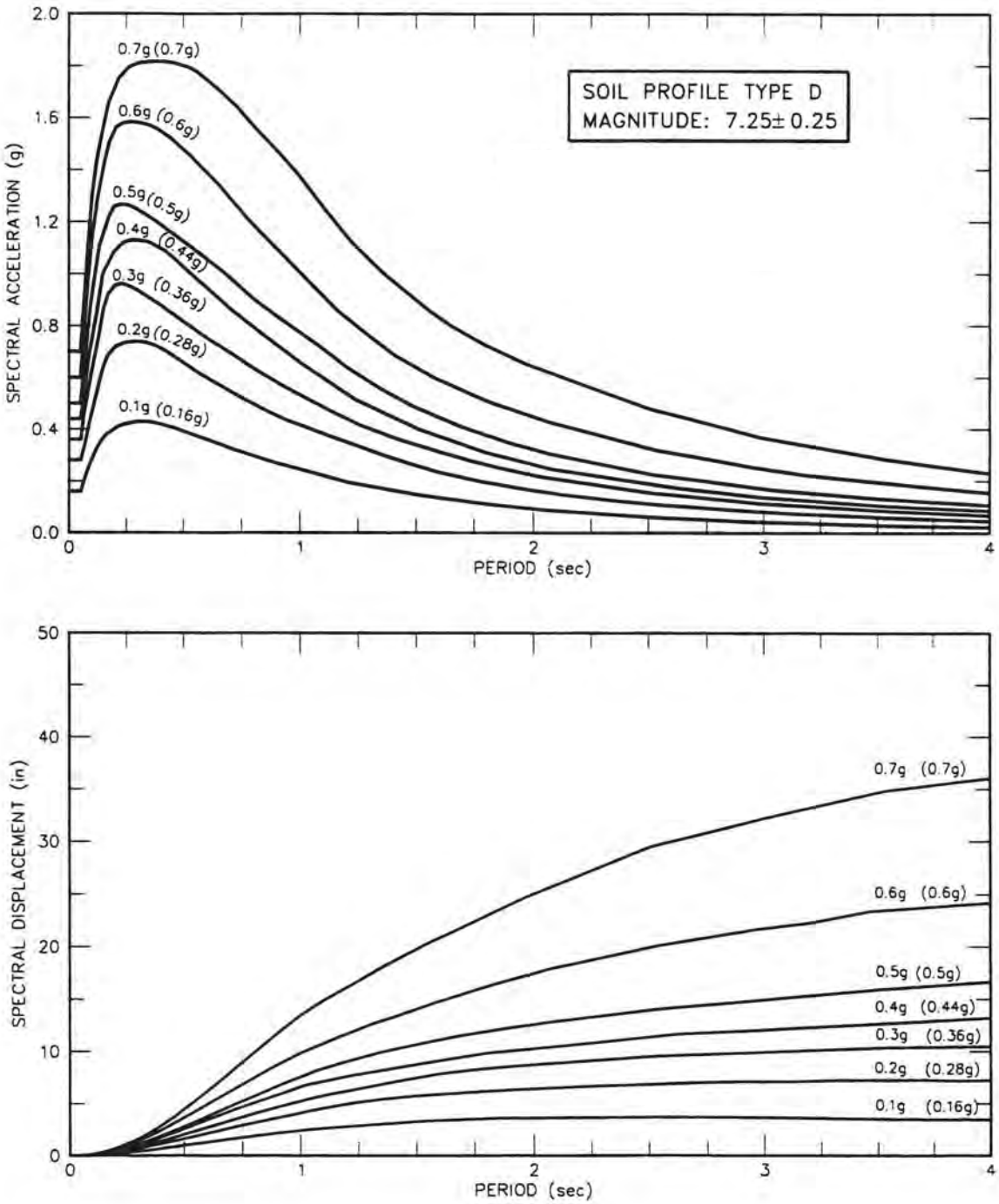


Note: Peak ground acceleration values not in parentheses are for rock (Soil Profile Type B) and peak ground acceleration values in parentheses are for Soil Profile Type D.

**Figure B.8 Elastic Response Spectra Curves (5% Damping) for Soil Profile Type D (M = 7.25 ± 0.25)**

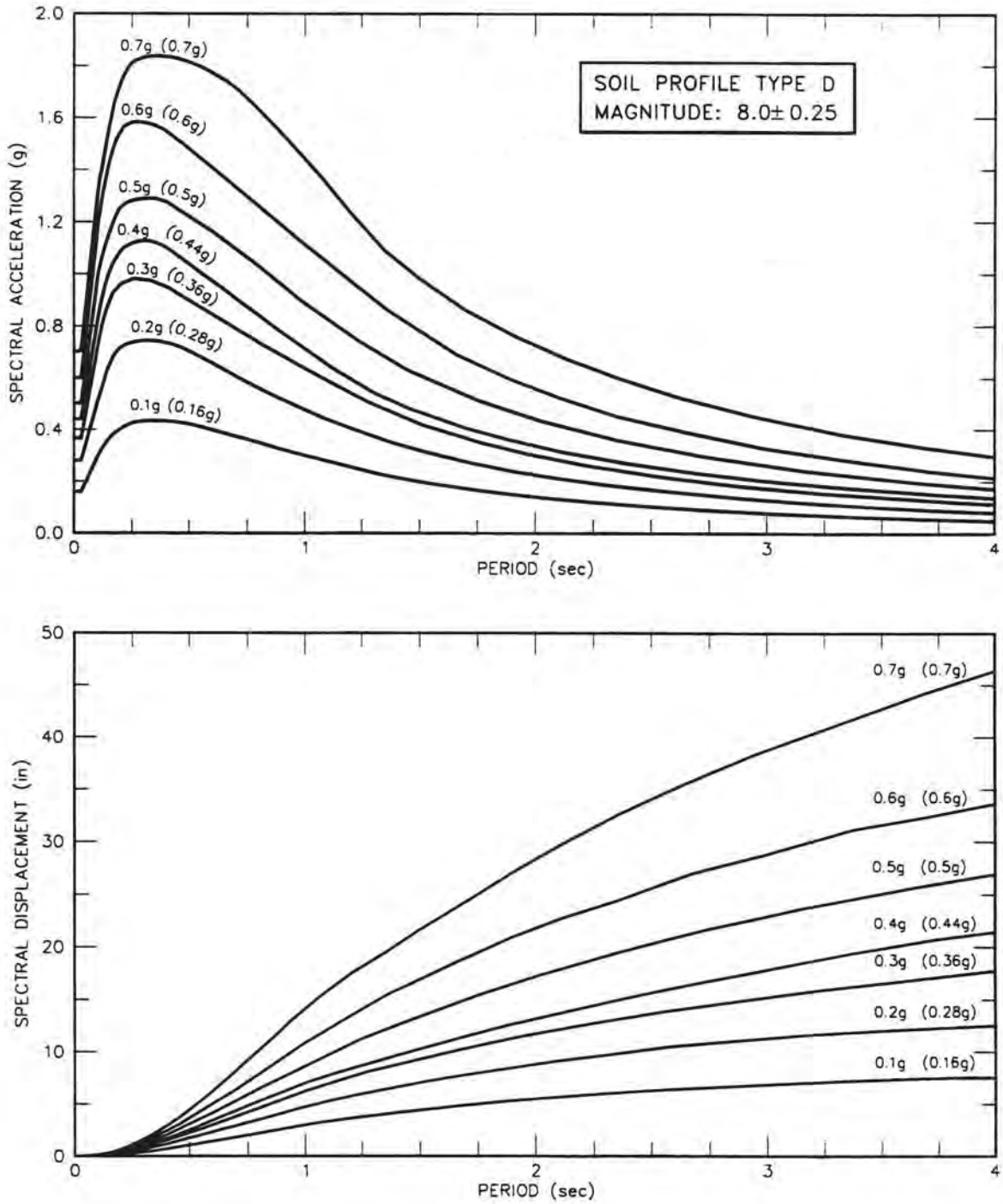


Note: Peak ground acceleration values not in parentheses are for rock (Soil Profile Type B) and peak ground acceleration values in parentheses are for Soil Profile Type D.

**Figure B.9 Elastic Response Spectra Curves (5% Damping) for Soil Profile Type D (M = 8.0 ± 0.25)**

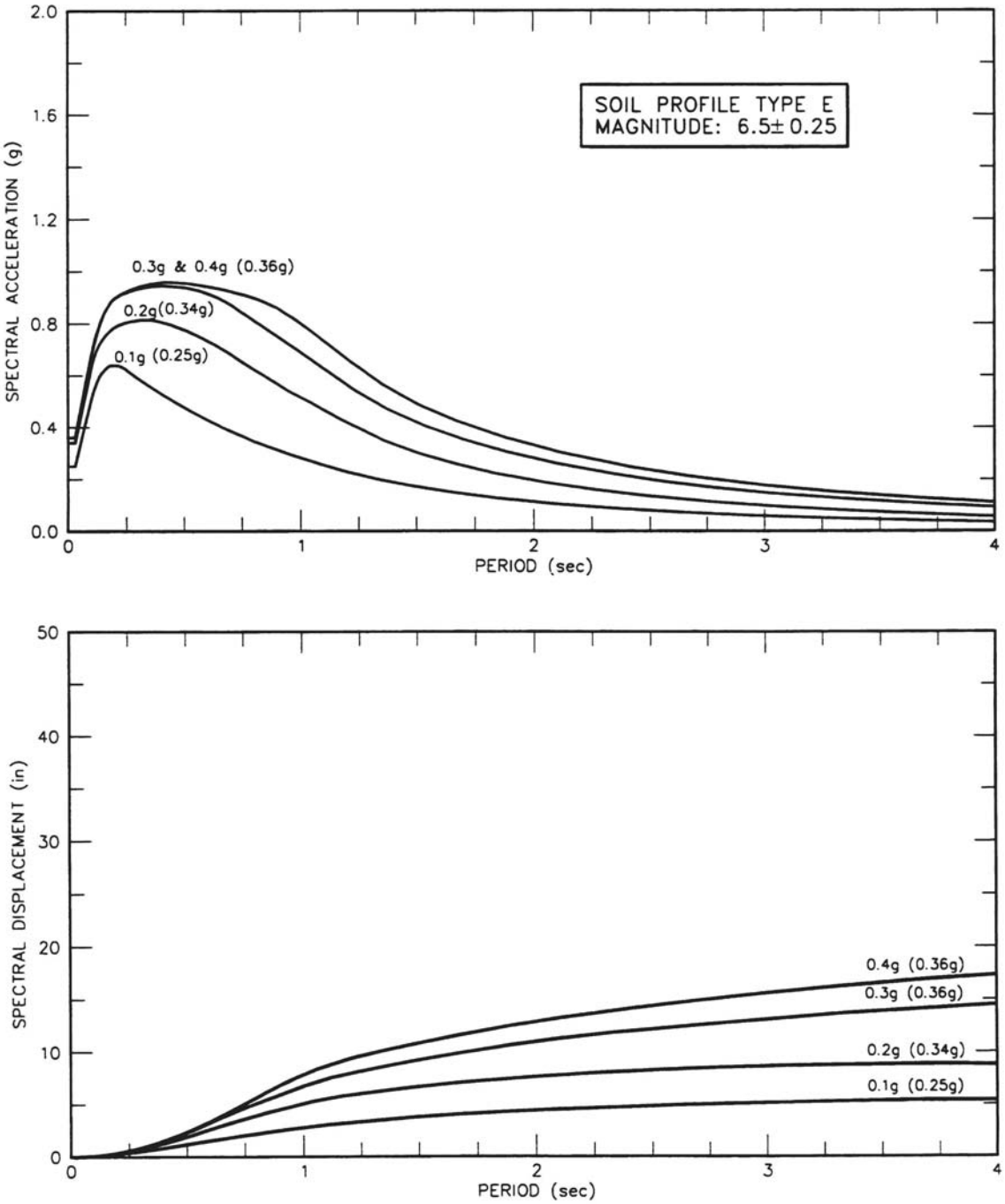


Note: Peak ground acceleration values not in parentheses are for rock (Soil Profile Type B) and peak ground acceleration values in parentheses are for Soil Profile Type E.

**Figure B.10 Elastic Response Spectra Curves (5% Damping) for Soil Profile Type E (M = 6.5 ± 0.25)**

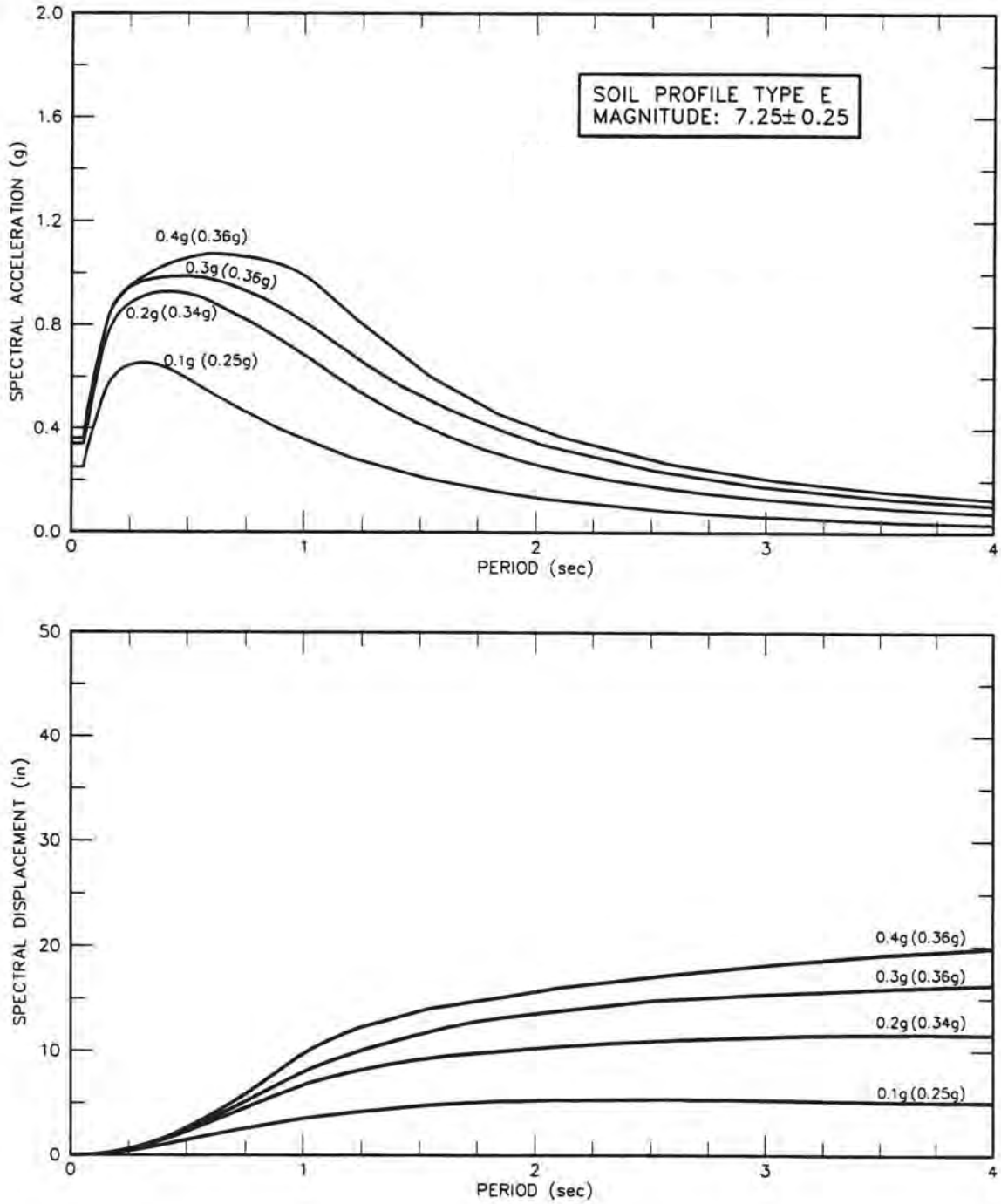


Note: Peak ground acceleration values not in parentheses are for rock (Soil Profile Type B) and peak ground acceleration values in parentheses are for Soil Profile Type E.

**Figure B.11 Elastic Response Spectra Curves (5% Damping) for Soil Profile Type E (M = 7.25 ± 0.25)**

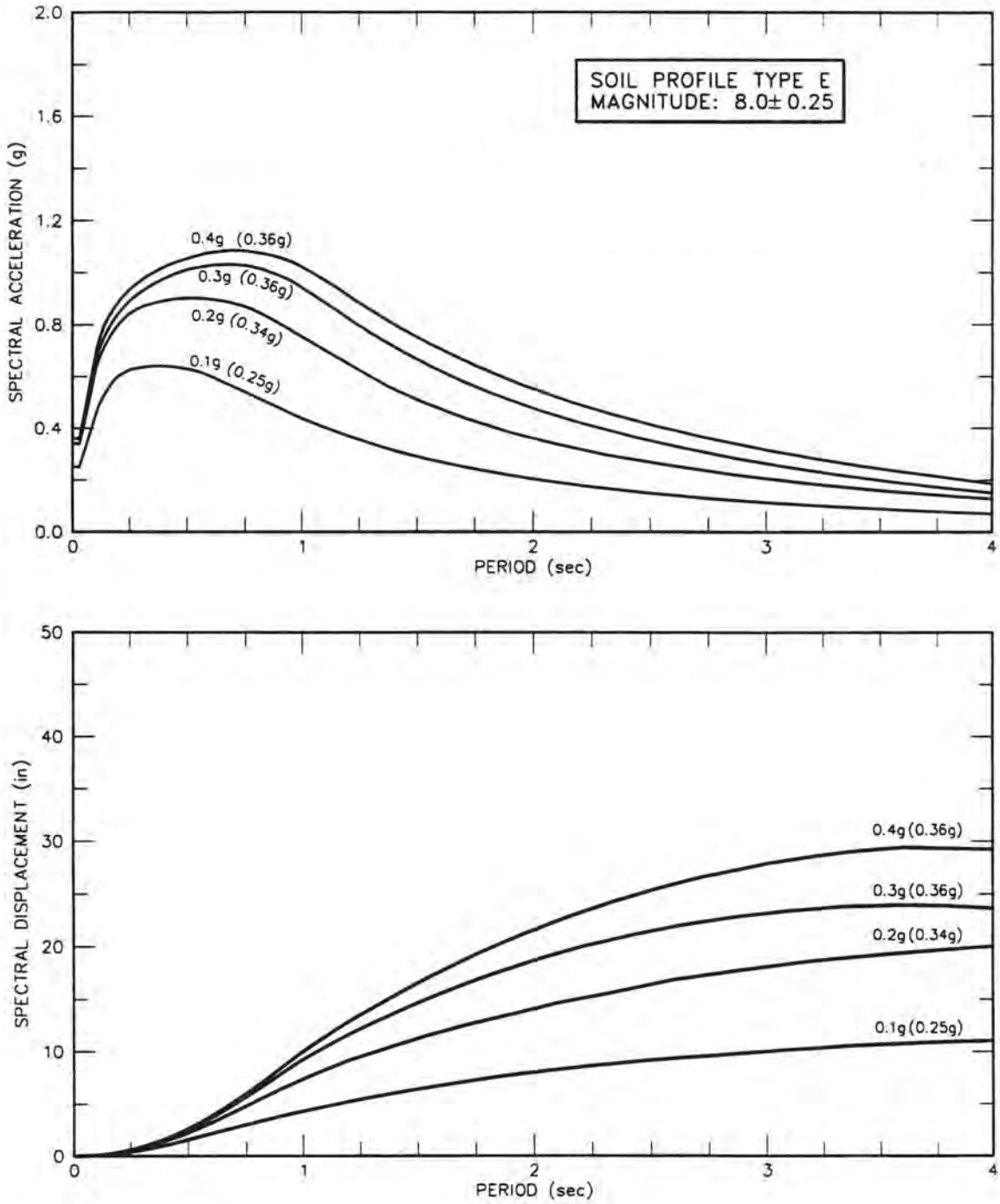


Note: Peak ground acceleration values not in parentheses are for rock (Soil Profile Type B) and peak ground acceleration values in parentheses are for Soil Profile Type E.

**Figure B.12 Elastic Response Spectra Curves (5% Damping) for Soil Profile Type E ($M$ = 8.0 ± 0.25)**

# APPENDIX C - BIBLIOGRAPHY


1. Housner, G.W. (Chairman, Seismic Advisory Board), 1994 *"The Continuing Challenge," Report to the Director, California Department of Transportation on the 1994 Northridge Earthquake*, Seismic Advisory Board, Sacramento, California.

2. ATC, 1996, ATC-32, *Improved Seismic Design Criteria for California Bridges: Provisional Recommendations*. Applied Technology Council, Report ATC-32, Redwood City, California.

3. Caltrans, (various dates), *Bridge Memo To Designers (MTD)*, California Department of Transportation, Sacramento, California.

4. Seyed-Mahan, M., 1996, *Procedures in Seismic Analysis and Design of Bridge Structures, release II draft, Caltrans Division of Structures*. California Department of Transportation, Sacramento, California.

5. Caltrans, 1997, *Seismic Design Criteria Retrofit of the West Approach to the San Francisco-Oakland Bay Bridge Draft #14*. California Department of Transportation, Sacramento, California.

6. Park, R. and T. Paulay, 1975, *Reinforced Concrete Structures*, John Wiley & Sons, New York.

7. Priestley, M.J.N., F. Seible, and G. M. Calvi, 1996, *Seismic Design and Retrofit of Bridges*, John Wiley & Sons, New York.

8. Priestley, M.J.N., and F. Seible, "Seismic Assessment and Retrofit of Bridges", *Structural Systems Research Project, Report SSRP-91/03*, University of California San Diego, July 1991.

9. Rinne, E.E., 1994, "Development of New Site Coefficient of Building Codes," *Proceedings of the Fifth U.S. National Conference on Earthquake Engineering*, Vol. III, pp.69-78, Earthquake Engineering Research Institute, Oakland, California.

10. Martin, G. R. and R. Dobry, 1994 "Earthquake Site Response and Seismic Code Provisions", *NCEER Bulletin, vol. 8, no. 4*, National Center for Earthquake Engineering Research, Buffalo, New York.

11. BSSC, 1994, *NEHRP Provisions*, 1994 edition, Building Seismic Safety Council, Washington D.C.

12. Caltrans, 2000, *Bridge Design Specifications*, LFD Version, California Department of Transportation, Sacramento, California.

13. Maroney, B.H., 1995, *Large Scale Bridge Abutment Tests to Determine Stiffness and Ultimate Strength under Seismic Loading*, Ph.D Dissertation, University of California, Davis.

14. Caltrans, 1996, *Seismic Hazard Map*, California Department of Transportation, Sacramento, California.