CHAPTER 4
STRUCTURAL MODELING AND ANALYSIS

TABLE OF CONTENTS

4.1 INTRODUCTION 4-1
4.2 STRUCTURE MODELING 4-1
4.2.1 General 4-1
4.2.2 Structural Modeling Guidelines 4-5
4.2.3 Material Modeling Guidelines 4-7
4.2.4 Types of Bridge Models 4-7
4.2.5 Slab-Beam Bridges 4-9
4.2.6 Abutments 4-14
4.2.7 Foundation 4-15
4.2.8 Examples 4-17
4.3 STRUCTURAL ANALYSIS 4-26
4.3.1 General 4-26
4.3.2 Analysis Methods 4-27
4.4 BRIDGE EXAMPLES – 3-D VEHICLE LIVE LOAD ANALYSIS 4-35
4.4.1 Background 4-35
4.4.2 Moving Load Cases 4-36
4.4.3 Live Load Distribution For One And Two-Cell Box Girders Example 4-38
NOTATION 4-51
REFERENCES 4-52

This page is intentionally left blank.

CHAPTER 4
STRUCTURAL MODELING AND ANALYSIS

4.1 INTRODUCTION

Structural analysis is a process to analyze a structural system to predict its responses and behaviors by using physical laws and mathematical equations. The main objective of structural analysis is to determine internal forces, stresses and deformations of structures under various load effects.

Structural modeling is a tool to establish three mathematical models, including (1) a structural model consisting of three basic components: structural members or components, joints (nodes, connecting edges or surfaces), and boundary conditions (supports and foundations); (2) a material model; and (3) a load model.

This chapter summarizes the guidelines and principles for structural analysis and modeling used for bridge structures.

4.2 STRUCTURE MODELING

4.2.1 General

For designing a new structure, connection details and support conditions shall be made as close to the computational models as possible. For an existing structure evaluation, structures shall be modeled as close to the actual as-built structural conditions as possible. The correct choice of modeling and analysis tools/methods depends on:

a) Importance of the structure
b) Purpose of structural analysis
c) Required level of response accuracy

This section will present modeling guidelines and techniques for bridge structures.

4.2.1.1 Types of Elements

Different types of elements may be used in bridge models to obtain characteristic responses of a structure system. Elements can be categorized based on their principal structural actions.

a) Truss Element

A truss element is a two-force member that is subjected to axial loads either tension or compression. The only degree of freedom for a truss (bar) element is axial displacement at each node. The cross sectional dimensions and material properties of each element are usually assumed constant along its length. The element may interconnect in a two-dimensional (2-D) or three-dimensional (3-D) configuration. Truss elements are typically used in analysis of truss structures.

b) Beam Element

A beam element is a slender member subject to lateral loads and moments. In general, it has six degrees of freedom at each node including translations and rotations. A beam element under pure bending has only four degrees of freedom.

c) Frame Element

A frame element is a slender member subject to lateral loads, axial loads and moments. It is seen to possess the properties of both truss and beam elements and also called a beam-column element. A three-dimensional frame formulation includes the effects of biaxial bending, torsion, axial deformation, and biaxial shear deformations. A frame element is modeled as a straight line connecting two joints. Each element has its own local coordinate system for defining section properties and loads.

d) Plate Element

A plate element is a two dimensional solid element that acts like a flat plate. There are two out-of-plane rotations and the normal displacement as Degree of Freedom (DOF). These elements model plate-bending behavior in two dimensions. The element can model the two normal moments and the cross moment in the plane of the element. The plate element is a special case of a shell element without membrane loadings.

e) Shell Element

A shell element (Figure 4.2-1) is a three-dimensional solid element (one dimension is very small compared with another two dimensions) that carries plate bending, shear and membrane loadings. A shell element may have either a quadrilateral shape or a triangular shape. Shell element internal forces are reported at the element mid-surface in force per unit length and are reported both at the top and bottom of the element in force per unit area. It is primarily used to determine local stress levels in cellular superstructure or in cellular pier and caissons. It is generally recommended to use the full behavior unless the entire structure is planar and is adequately restrained.

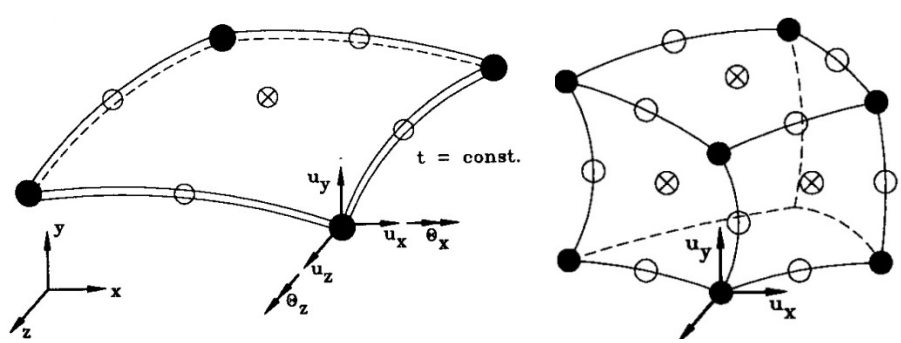

Figure 4.2-1 Shell and Solid Elements

f) Plane Element

The plane element is a two-dimensional solid, with translational degrees of freedom, capable of supporting forces but not moments. One can use either plane stress elements or plane strain elements. Plane stress element is used to model thin plate that is free to move in the direction normal to the plane of the plate. Plane strain element is used to model a thin cut section of a very long solid structure, such as walls. Plain strain element is not allowed to move in the normal direction of the element's plane.

g) Solid Element

A solid element is an eight-node element as shown in Figure 4.2-1 for modeling three-dimensional structures and solids. It is based upon an isoparametric formulation that includes nine optional incompatible bending modes. Solid elements are used in evaluation of principal stress states in joint regions or complex geometries (CSI, 2014).

h) The NlLink Element

A NlLink element (CSI, 2014) is an element with structural nonlinearities. A NlLink element may be either a one-joint grounded spring or a two-joint link and is assumed to be composed of six separate springs, one for each degree of deformational degrees of freedom including axial, shear, torsion, and pure bending. Non-linear behavior is exhibited during nonlinear time-history analyses or nonlinear static analyses.

4.2.1.2 Types of Boundary Elements

Selecting the proper boundary condition has an important role in structural analysis. Effective modeling of support conditions at bearings and expansion joints requires a careful consideration of continuity of each translational and rotational component of displacement. For a static analysis, it is common to use a simpler assumption of supports (i.e. fixed, pinned, roller) without considering the soil/ foundation system stiffness. However for dynamic analysis, representing the soil/foundation stiffness is essential. In most cases choosing a [6×6] stiffness matrix is adequate.

For specific projects, the nonlinear modeling of the system can be achieved by using nonlinear spring/damper. Some Finite Element programs such as ADINA (ADINA, 2014) have more capability for modeling the boundary conditions than others.

4.2.1.3 Types of Materials

Different types of materials are used for bridge structure members such as concrete, steel, prestressing tendons, etc. For concrete structures, see Article C5.4.1 and for steel structures see Article 6.4 of the *AASHTO LRFD Bridge Design Specifications* (AASHTO, 2012).

The material properties that are usually used for an elastic analysis are: modulus of elasticity, shear modulus, Poisson's ratio, the coefficient of thermal expansion, the mass density and the weight density. One should pay attention to the units used for material properties.

4.2.1.4 Types of Loads

There are two types of loads in a bridge design:

Permanent Loads: Loads and forces that are assumed to be either constant upon completion of construction or varying only over a long time interval (AASHTO 3.2). Such loads include the self weight of structure elements, wearing surface, curbs, parapets and railings, utilities, locked-in force, secondary forces from post-tensioning, force effect due to shrinkage and due to creep, and pressure from earth retainments (CA 3.3.2).

Transient Loads: Loads and forces that can vary over a short time interval relative to the lifetime of the structure (AASHTO 3.2). Such loads include gravity loads due to vehicular, railway and pedestrian traffic, lateral loads due to wind and water, ice flows, force effect due to temperature gradient and uniform temperature, and force effect due to settlement and earthquakes (CA 3.3.2).

Loads are discussed in Chapter 3 in detail.

4.2.1.5 Modeling Discretization

Formulation of a mathematical model using discrete mathematical elements and their connections and interactions to capture the prototype behavior is called Discretization. For this purpose:

a) Joints/Nodes are used to discretize elements and primary locations in structure at which displacements are of interest.
b) Elements are connected to each other at joints.
c) Masses, inertia, and loads are applied to elements and then transferred to joints.

Figure 4.2-2 shows a typical model discretization for a bridge bent.

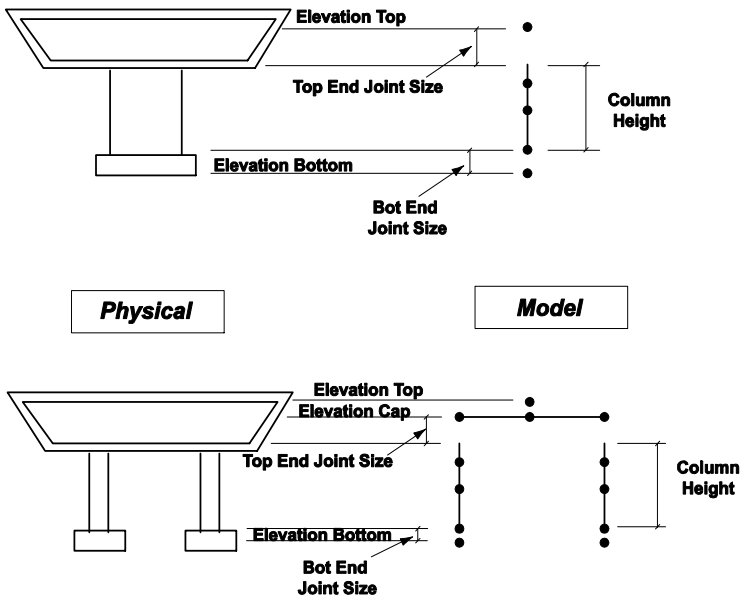

Figure 4.2-2 Model Discretization for Monolithic Connection

4.2.2 Structural Modeling Guidelines

4.2.2.1 Lumped-Parameter Models (LPMs)

- Mass, stiffness, and damping of structure components are usually combined and lumped at discrete locations. It requires significant experience to formulate equivalent force-deformation with only a few elements to represent structure response.
- For a cast-in-place prestressed (CIP/PS) concrete box girder superstructure, a beam element located at the center of gravity of the box girder can be used. For non-box girder structures, a detailed model will be needed to evaluate the responses of each separate girder.

4.2.2.2 Structural Component Models (SCMs) - Common Caltrans Practice

- Based on idealized structural subsystems/elements to resemble geometry of the structure. Structure response is given as an element force-deformations relationship.
- Gross moment of inertia is typically used for non-seismic analysis of concrete column modeling.
- Effective moment of inertia can be used when analyzing large deformation under loads, such as prestressing and thermal effects. Effective moment of inertia is the range between gross and cracked moment of inertia. To calculate effective moment of inertia, see AASHTO LRFD 5.7.3.6.2 (AASHTO, 2012).

- Cracked moment of inertia is obtained using section moment - curvature analysis (e.g. xSection or CSiBridge Section Designer), which is the moment of inertia corresponding to the first yield curvature. For seismic analysis, refer to Seismic Design Criteria (SDC) 5.6 "Effective Section Properties" (Caltrans, 2013).

4.2.2.3 Finite Element Models (FEMs)

- A bridge structure is discretized with finite-size elements. Element characteristics are derived from the constituent structural materials (AASHTO 4.2).

Figure 4.2-3 shows the levels of modeling for seismic analysis of bridge structures.

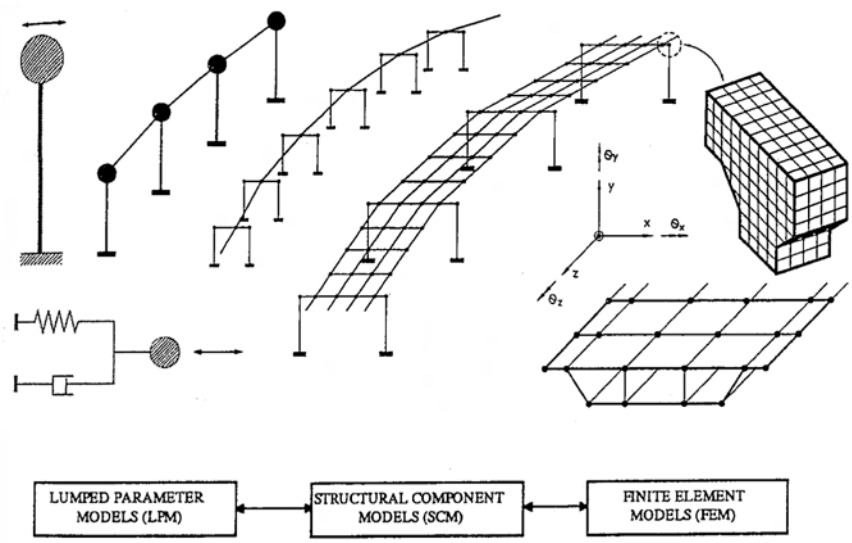

Figure 4.2-3 Levels of Modeling for Seismic Analysis of Bridge (Priestley, et al 1996)

The importance of the structure, experience of the designer and the level of needed accuracy affects type of model, location of joints and elements within the selected model, and number of elements/joints to describe geometry of the structure. For example, a horizontally curved structure should be defined better by shell elements in comparison with straight elements. The other factors to be considered are:

a) Structural boundaries - e.g., corners
b) Changes in material properties
c) Changes in element sectional properties
d) Support locations
e) Points of application of concentrated loads - Frame elements can have in-span loads

4.2.3 Material Modeling Guidelines

Material models should be selected based on a material's deformation under external loads. A material is called elastic, when it returns to its original shape upon release of applied loads. Otherwise it is called an inelastic material.

For an elastic body, the current state of stress depends only on the current state of deformation while, in an inelastic body, residual deformation and stresses remain in the body even when all external tractions are removed.

The elastic material may show linear or nonlinear behavior. For linear elastic materials, stresses are linearly proportional to strains ($\sigma = E\epsilon$) as described by Hooke's Law. The Hooke's Law is applicable for both homogeneous and isotropic materials.

- Homogeneous means that the material properties are independent of the coordinates.
- Isotropic means that the material properties are independent of the rotation of the axes at any point in the body or structure. Only two elastic constants (modulus of elasticity E and Poisson's ratio ν) are needed for linear elastic materials.

For a simple linear spring, the constitutive law is given as: $F_s = k\xi$ where ζ is the relative extension or compression of the spring, while F_s and k represent the force in the spring and the spring stiffness, respectively. Stiffness is the property of an element which is defined as force per unit displacement.

For a nonlinear analysis, nonlinear stress-strain relationships of structural materials should be incorporated.

- For unconfined concrete a general stress-strain relationship proposed by Hognestad is widely used. For confined concrete, generally Mander's model is used (Akkari and Duan, 2014).
- For structural steel and reinforcing steel, the stress-strain curve usually includes three segments: elastic, perfectly plastic, and a strain-hardening region.
- For prestressing steel, an idealized nonlinear stress-strain model may be used.

4.2.4 Types of Bridge Models

4.2.4.1 Global Bridge Models

A global bridge model includes the entire bridge with all frames and connecting structures. It can capture effects due to irregular geometry such as curves in plane and elevation, effects of highly-skewed supports, contribution of ramp structures, frames interaction, expansion joints, etc. It is primarily used in seismic design to verify design parameters for the individual frame. The global model may be in question because of spatially varying ground motions for large, multi-span, and multi-frame

bridges under seismic loading. In this case a detailed discretization and modeling force-deformation of individual element is needed.

4.2.4.2 Tension and Compression Models

The tension and compression models are used to capture nonlinear responses for bridges with expansion joints (MTD 20-4, Caltrans, 2007) to model the non-linearity of the hinges with cable restrainers. Maximum response quantities from the two models are used for seismic design.

a) Tension Model

Tension model is used to capture out-of-phase frame movement. The tension model allows relative longitudinal movement between adjacent frames by releasing the longitudinal force in the rigid hinge elements and abutment joints and activating the cable restrainer elements. The cable restrainer unit is modeled as an individual truss element with equivalent spring stiffness for longitudinal movement connecting across expansion joints.

b) Compression Model

Compression model is used to capture in-phase frame movement. The compression model locks the longitudinal force and allows only moment about the vertical and horizontal centerline at an expansion joint to be released. All expansion joints are rigidly connected in longitudinal direction to capture effects of joint closing-abutment mobilized.

4.2.4.3 Frame Models

A frame model is a portion of structure between the expansion joints. It is a powerful tool to assess the true dynamic response of the bridge since dynamic response of stand-alone bridge frames can be assessed with reasonable accuracy as an upper bound response to the whole structure system. Seismic characteristics of individual frame responses are controlled by mass of superstructure and stiffness of individual frames. Transverse stand-alone frame models shall assume lumped mass at the columns. Hinge spans shall be modeled as rigid elements with half of their mass lumped at the adjacent column (SDC Figure 5.4.1-1, Caltrans, 2013). Effects from the adjacent frames can be obtained by including boundary frames in the model.

4.2.4.4 Bent Models

A transverse model of bent cap and columns is needed to obtain maximum moments and shears along bent cap. Dimension of bent cap should be considered along the skew.

Individual bent model should include foundation flexibility effects and can be combined in frame model simply by geometric constraints. Different ground motion can be input for individual bents. The high in-plane stiffness of bridge superstructures allows rigid body movement assumption which simplifies the combination of individual bent models.

4.2.5 Slab-Beam Bridges

4.2.5.1 Superstructures

For modeling slab-beam bridges, either Spine Model or a Grillage Model should be used.

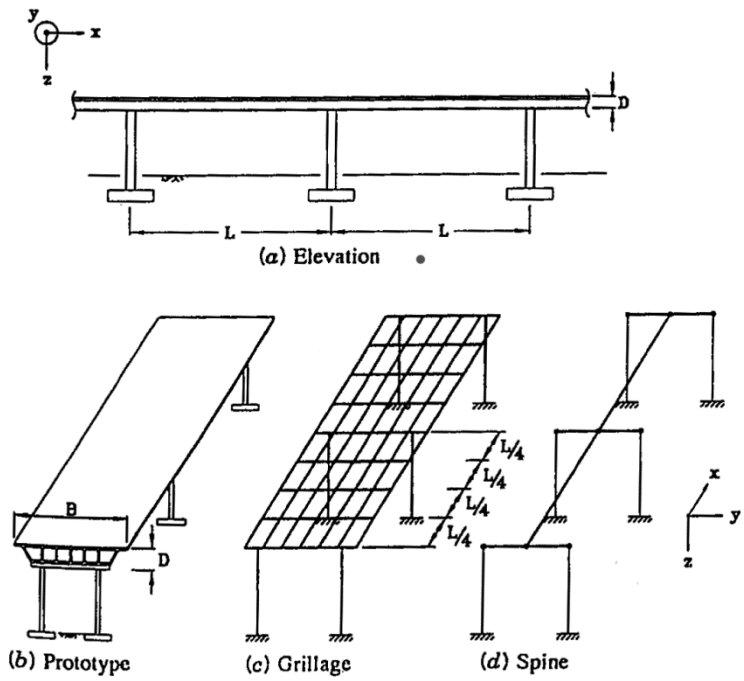

Figure 4.2-4 Superstructure Models (Priestley, et al 1996).

a) Spine Model

Spine Models with beam elements are usually used for ordinary bridges. The beam element considers six DOF at both ends of the element and is modeled at their neutral axis.

- The effective stiffness of the element may vary depending on the structure type.
- Use SDC V1.7 to define effective flexural stiffness EI_{eff} for reinforced concrete box girders and pre-stressed box girders as follows:
  - For reinforced concrete (RC) box girder, (0.5~0.75) EI_g
  - For prestressed concrete (PS) box girder, 1.0 EI_g and for tension it considers I_g,
- where I_g is the gross section moment of inertia.
- The torsional stiffness for superstructures can be taken as: GJ for un-cracked section and 0.5 GJ for cracked section.
- Spine model can't capture the superstructure carrying wide roadway, high-skewed bridges. In these cases use grillage model.

b) Grillage Models/3D Finite Element Model

- Grillage Models are used for modeling steel composite deck superstructures and complicated structures where superstructures can't be considered rigid such as very long and narrow bridges, interchange connectors.

4.2.5.2 Bents

If the bridge superstructure can be assumed to move as a rigid body under seismic load, the analysis can be simplified to modeling bents only. Frame elements, effective bending stiffness, cap with large torsional and transverse bending stiffness to capture superstructure, and effective stiffness for outriggers should be considered. Figure 4.2-5 shows single column bent models.

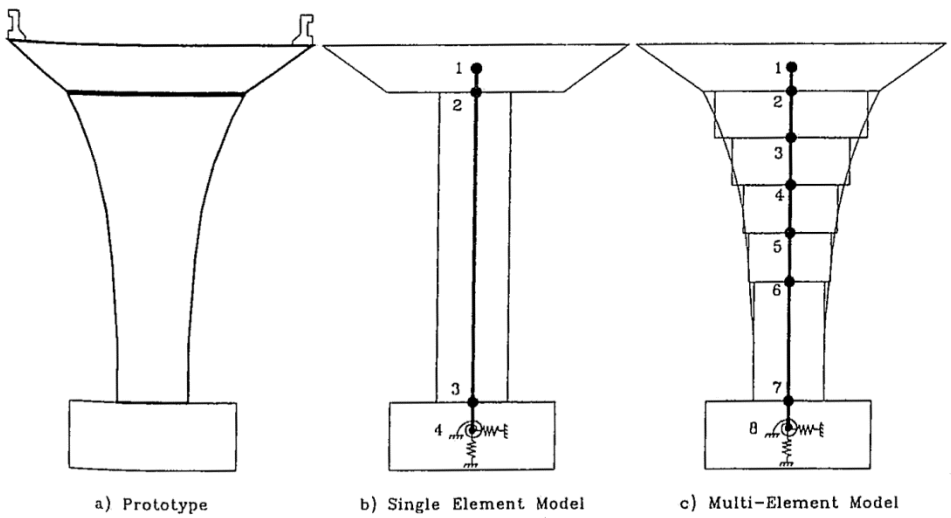

Figure 4.2-5 Single-Column Bent Models (Priestley et al, 1996)

4.2.5.3 Superstructure - Bents Connection

In modeling the superstructure bent connections, two different connections as shown in Figures 4.2-2 and 4.2-6 may be considered:

a) Monolithic connections for cast-in-place box girders and integral bent cap for precast girders.

b) Bearing supported connections for precast concrete girders or steel superstructures on drop cap. Different types of bearings are: PTFE, stainless steel sliders, rocker bearings and elastomeric bearings. With the bearing-supported connections, one may use the isolated bearing by using special seismic bearings and energy-dissipating devices to reduce resonant buildup of displacement.

In monolithic connections all the degrees of freedom are restrained (three degrees of translations and three degrees for rotation); however, in bearing supported

connections, only three degrees of translations are restrained but the rotational degrees of freedom are free.

In the bearing supported structures, the superstructure is not subjected to seismic moment transferred through the column. However the design is more sensitive to seismic displacement than with the monolithic connection.

The energy dissipation devices in the isolated bearing reduce the seismic displacement significantly in comparison with bearing-supported structures. The designer should pay attention to the possibility of increased acceleration when using the bearing-supported connections with or without energy-dissipation devices in soft soils.

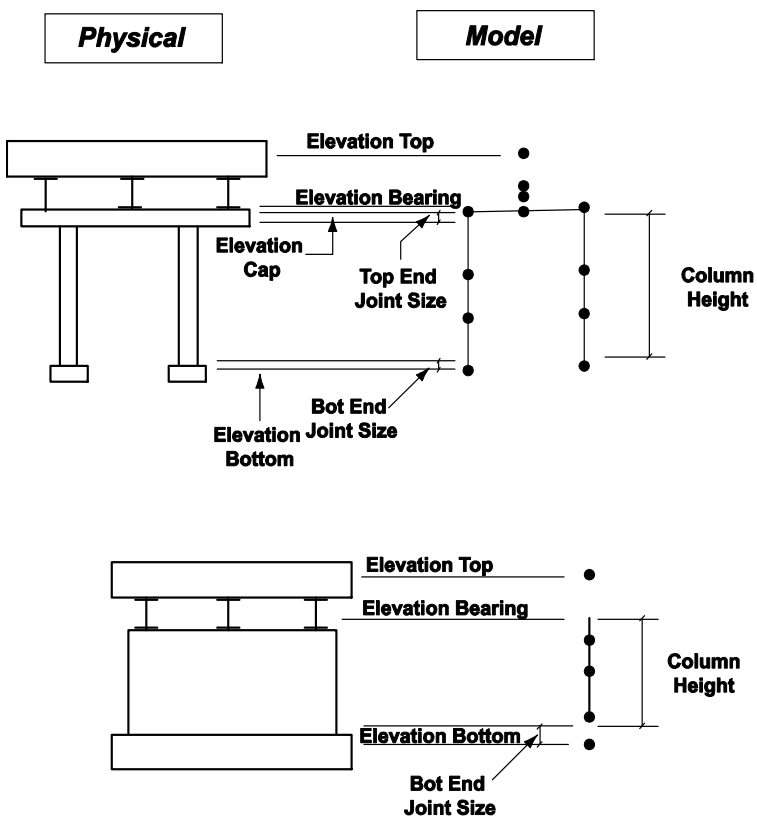

Figure 4.2-6 Superstructure-Bent Connection

4.2.5.4 Hinges

Hinges separate frames in long structures to allow for movements due to thermal, initial pre-stress shortening and creep without large stresses and strains in members.

A typical hinge should be modeled as 6 degrees of freedom, i.e., free to rotate in the longitudinal direction and pin in the transverse direction to represent shear (Figure 4.2-7).

It is Caltrans practice to use Linear Elastic Modal Analysis with two different structural models, Tension and Compression, to take care of this analysis issue.

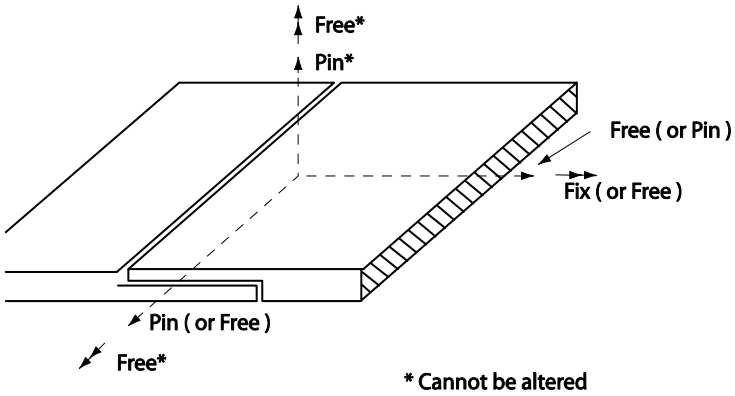

Figure 4.2-7 Span Hinge Force Definitions (Priestley et al, 1996)

4.2.5.5 Substructures

Figures 4.2-8 and 4.2-9 show a multi-column bent model and a foundations spring model at a bent, respectively. Figure 4.2-10 shows a multi bridge frame model.

a) Column-Pier Sections

- Prismatic - same properties or Non-Prismatic
- Shapes Circular Column, Rectangular, Hollow-Section Column

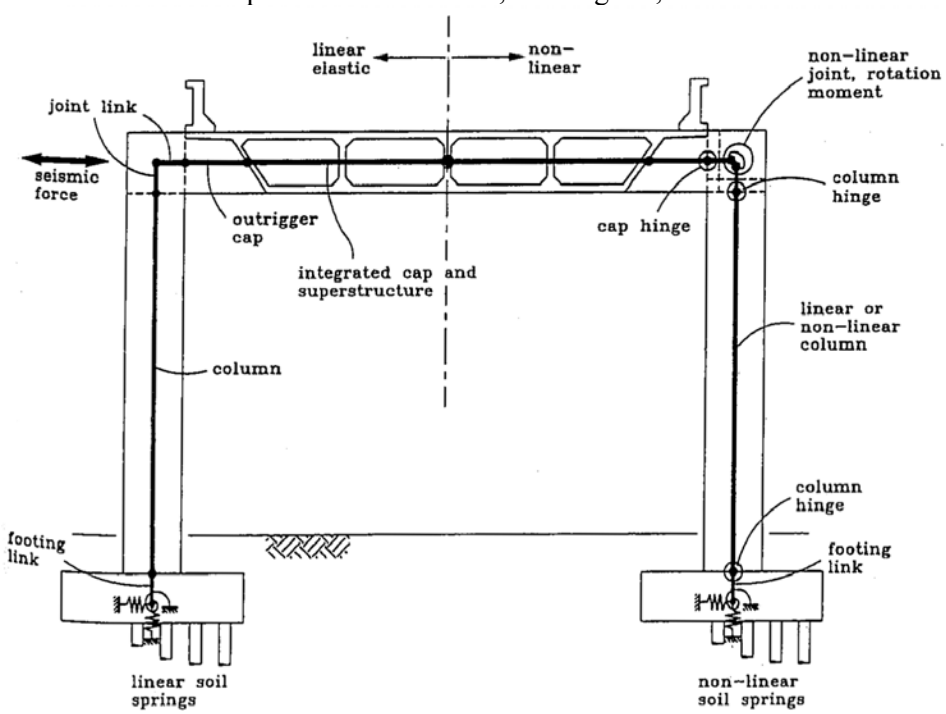

Figure 4.2-8 Multi-Column Bent Model (Priestley et al, 1996)

b) Bent-Foundation Connection

- Pin base: Generally used for multi-column bents.
- Fixed Base: For single column base.

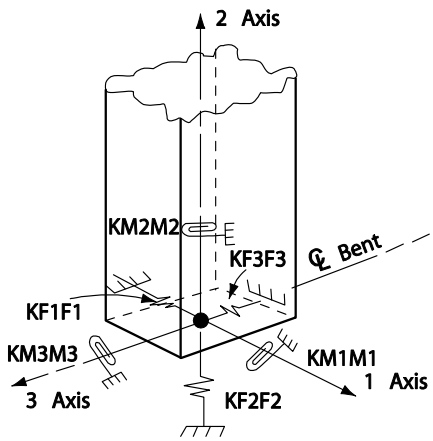

Isometric Elevation

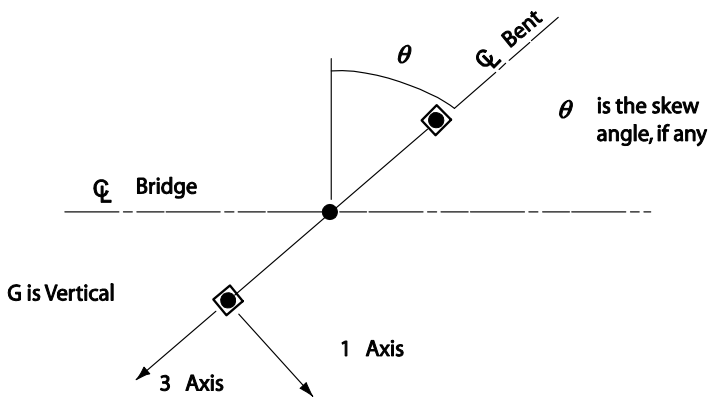

Plan

Figure 4.2-9 Foundation Spring Definition at a Bent

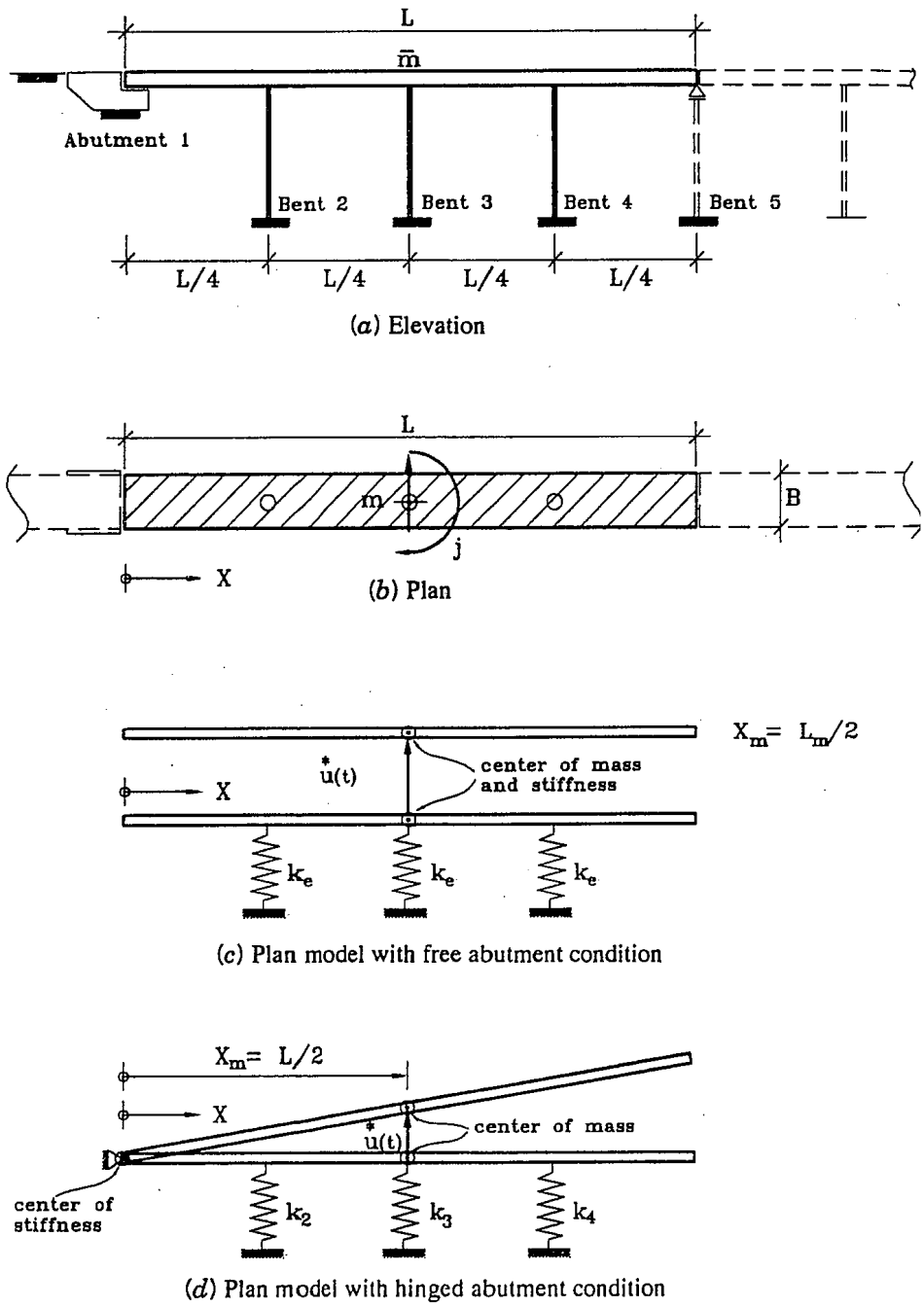

Figure 4.2-10 Multi Bridge Frame (Priestley et al, 1996)

4.2.6 Abutments

When modeling bridge structure, abutment can be modeled as pin, roller or fixed boundary condition. For modeling the soil-structure interaction, springs can be used.

Figure 4.2-11 shows end restraint with springs to model soil-structure interaction for seat and rigid abutments. Abutment stiffness, capacities, and damping affect seismic response. Seismic Design Criteria V1.7, Section 7.8 discusses the longitudinal and transverse abutment responses in an earthquake. For modeling gap, back wall and piles effective stiffness is used with non-linear behavior. Iterative procedure should be used to find a convergence between stiffness and displacement.

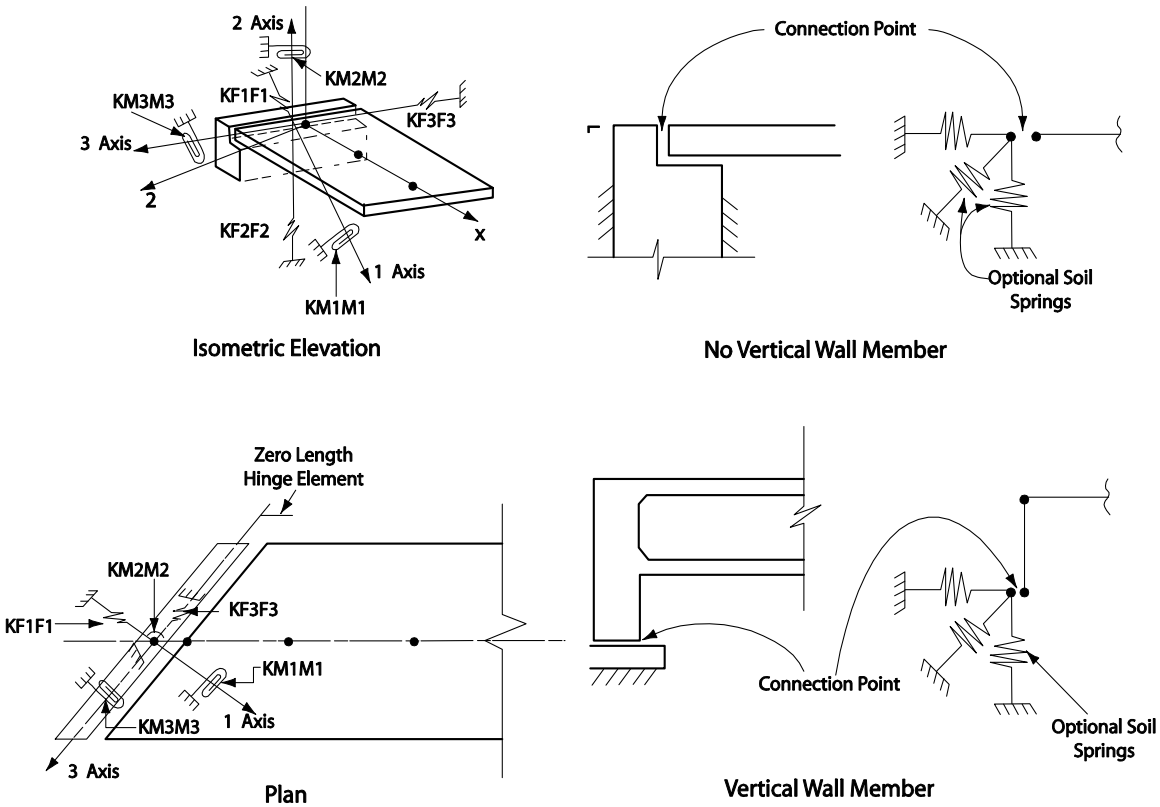

Figure 4.2-11 Foundation Spring Definition

4.2.7 Foundation

4.2.7.1 Group Piles

Supports can be modeled using:

- Springs - 6 × 6 stiffness matrix - defined in global/joint local coordinate system.
- Restraints - known displacement, rotation - defined in global DOF.
- Complete pile system with soil springs along with the bridge.

4.2.7.2 Pile shaft

When modeling the pile shaft for non-seismic loading, an equivalent fixity model can be used (Figure 4.2-12c). For seismic loading, a soil-spring model (Figure 4.2-12b) should be considered to capture the soil-structure interaction. Programs such as Wframe, L-Pile, CSiBridge or ADINA can be used.

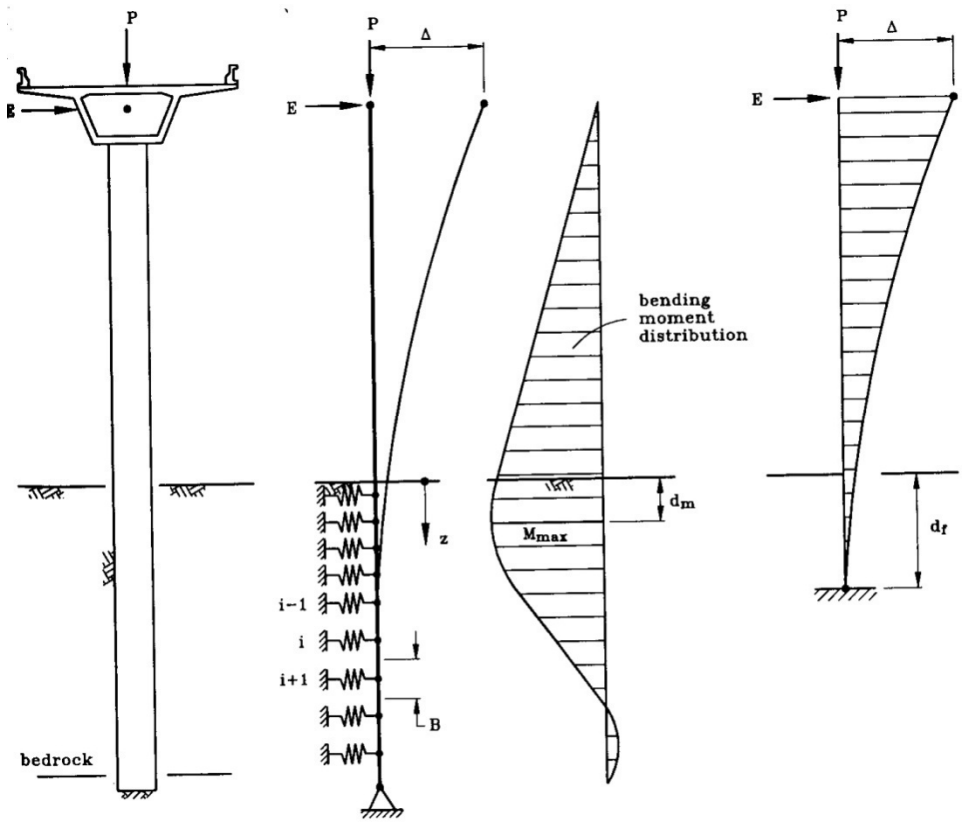

a) Prototype b) Soil-Spring Model c) Equivalent Fixity Model

Figure 4.2-12 CIDH Pile Shaft Models (Priestley et al, 1996)

4.2.7.3 Spread Footing

Spread footings are usually built on stiff and competent soils, fixed boundary conditions are assumed for the translational springs, and rotation is considered only when uplift and rocking of the entire footing are expected.

4.2.8 Examples

4.2.8.1 CTBridge

CTBridge (Caltrans, 2014b) is a Finite Element Analysis and Design software using a 3D spine model for the bridge structure. This allows description of skewed supports, horizontal and vertical curves, and multi-column bents.

CTBridge allows user manipulation of various settings such as:

- Number of Elements
- Live Load Step Sizes
- Prestress Discretization
- P-Jack Design Limits

For non-skewed bridges, the abutment can be considered pinned or roller. For skewed bridges, springs should be used at the abutments. The stiffness of the springs shall be based on the stiffness of the bearing pads. If bearing stiffness is not available, slider can be used instead of pin or roller. For bridges with curved alignments and skewed supports or straight bridges with skews in excess of 60 degrees, a full 3-D analysis model, such as a grillage or shell model may be required to more accurately capture the true distribution of the load.

Note that in order to get the result at each 0.1 span, you should define the offset from begin and end span, i.e. from CL abutment to face of abutment.

The following structure shown in Figures 4.2-13a to 4.2-13c is used as an example for CTBridge.

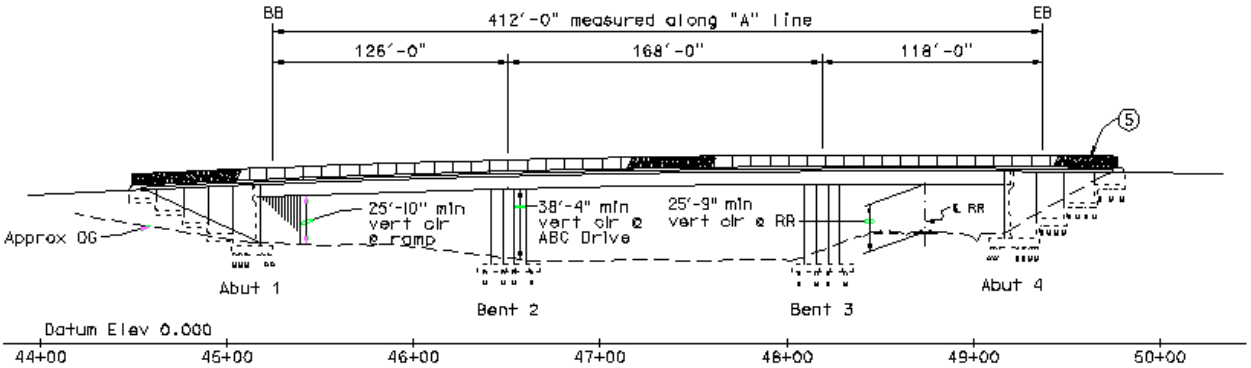

Figure 4.2-13a Elevation View of Example Bridge

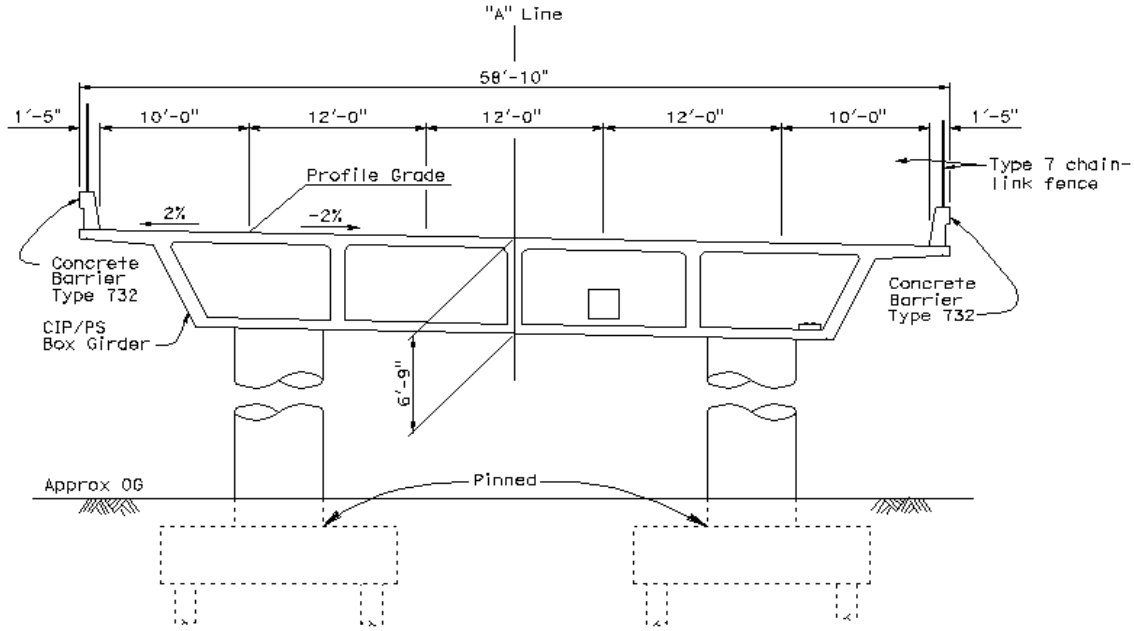

Figure 4.2-13b Typical Section View of Example Bridge

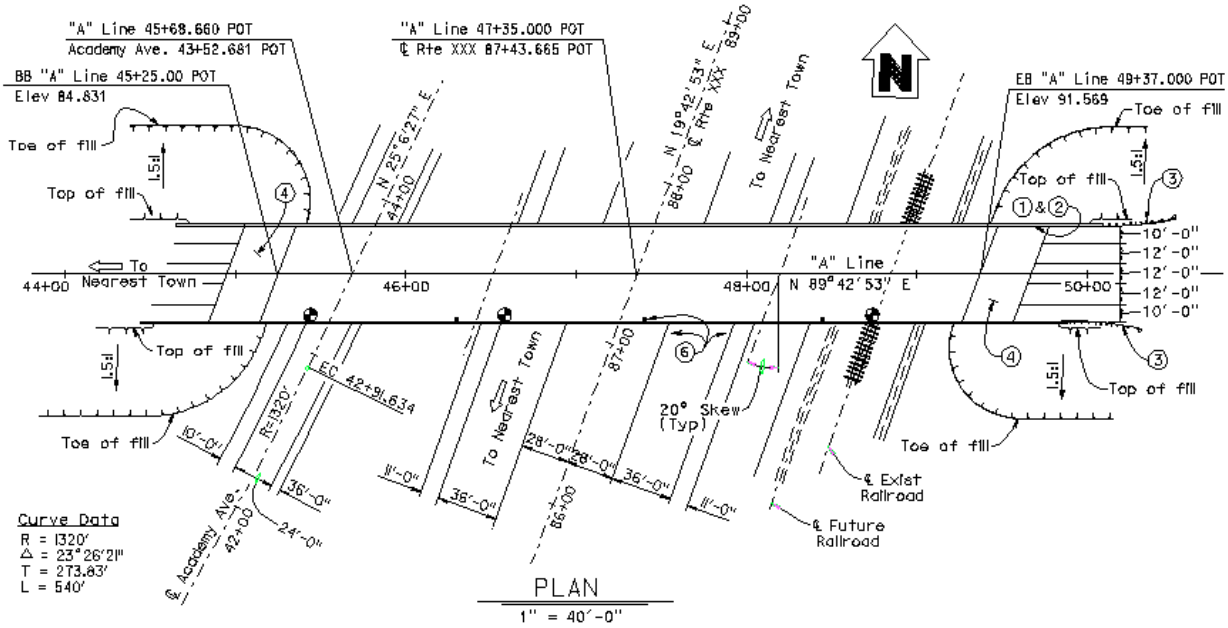

Figure 4.2-13c Plan View of Example Bridge

Figure 4.2-14 shows CTBridge model for example bridge.

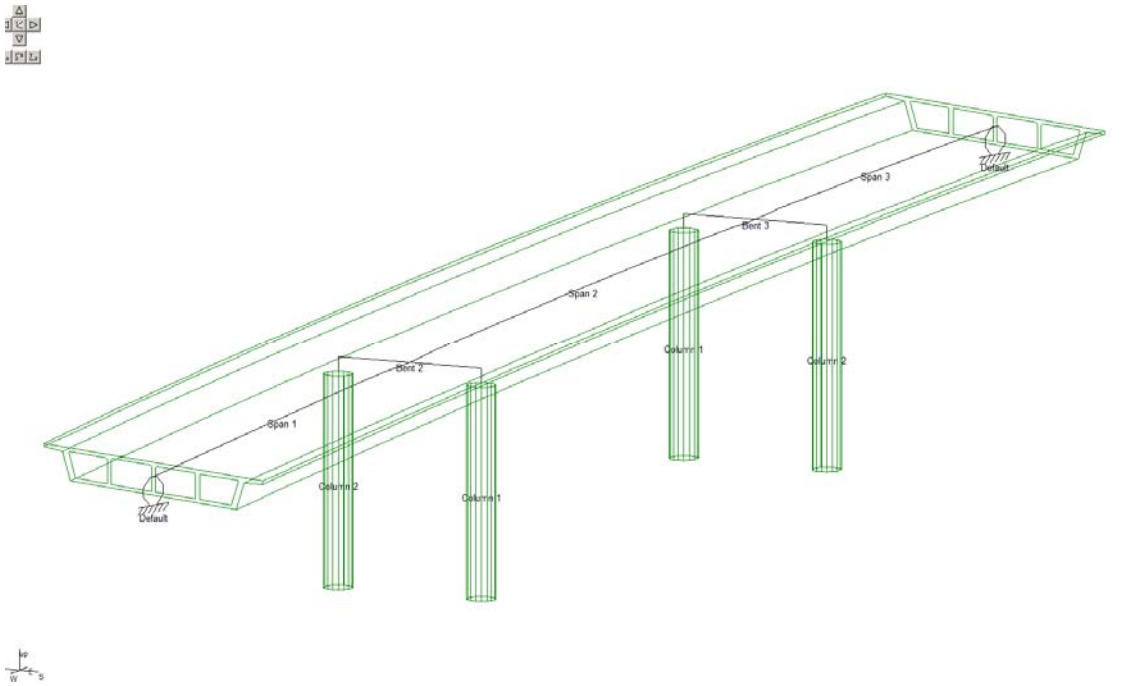

Figure 4.2-14 Example Bridge - CTBridge Model

Figure 4.2-15 shows sign convention for CTBridge.

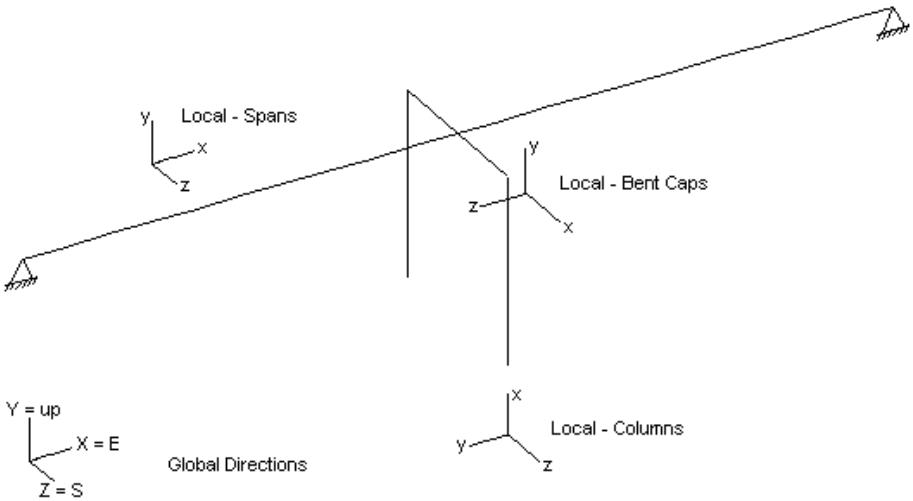

Figure 4.2-15 Sign Convention at CTBridge

Figure 4.2-16 shows two spine models.

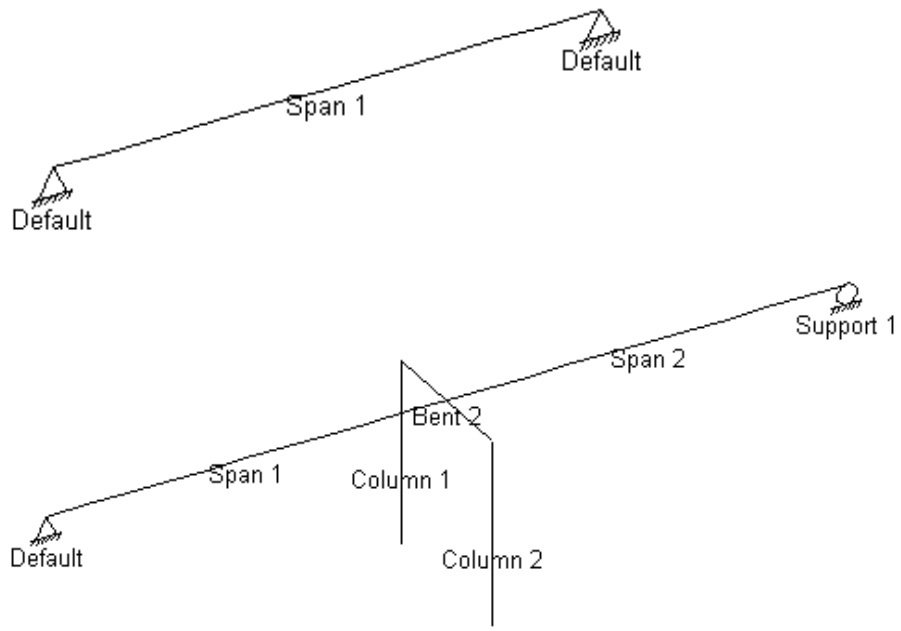

Figure 4.2-16 3D Frame in CTBridge

4.2.8.2 CSiBridge

CSiBridge is the latest and one of the most powerful versions of the well-known Finite Element Program SAP series of Structural Analysis Programs, which offers the following features:

- Static and Dynamic Analysis
- Linear and Nonlinear Analysis
- Dynamic Seismic Analysis and Static Pushover Analysis
- Vehicle Live-Load Analysis for Bridges, Moving Loads with 3D Influence Surface, Moving Loads with Multi-Step Analysis, Lane Width Effects
- P-Delta Analysis
- Cable Analysis
- Eigen and Ritz Analyses
- Fast Nonlinear Analysis for Dampers
- Energy Method for Drift Control
- Segmental Construction Analysis

The following are the general steps to be defined for analyzing a structure using CSiBridge:

- Geometry (input nodes coordinates, define members and connections)
- Boundary Conditions/ Joint Restraints (fixed, free, roller, pin or partially restrained with a specified spring constant)
- Material Property (Elastic Modulus, Poisson's Ratio, Shear Modulus, damping data, thermal properties and time-dependent properties such as creep and shrinkage)
- Loads and Load cases
- Stress-strain relationship
- Perform analysis of the model based on analysis cases

Bridge Designers can use CSiBridge templates for generating Bridge Models, Automated Bridge Live Load Analysis and Design, Bridge Base Isolation, Bridge Construction Sequence Analysis, Large Deformation Cable Supported Bridge Analysis, and Pushover Analysis.

The user can either model the structure as a Spine Model (Frame) or a 3D Finite Element Model.

Concrete Box Girder Bridge:

In this section, we create a CSiBridge model for the Example Bridge using the Bridge Wizard (BrIM-Bridge Information Modeler). The Bridge Modeler has 13 modeling step processes which the major steps are described below:

a) Layout line

The first step in creating a bridge object is to define highway layout lines using horizontal and vertical curves. Layout lines are used as reference lines for defining the layout of bridge objects and lanes in terms of stations, bearings and grades considering super elevations and skews.

b) Deck Section

Various parametric bridge sections (Box Girders & Steel Composites) are available for use in defining a bridge. See Figure 4.2-17.

User can specify different Cross Sections along Bridge length.

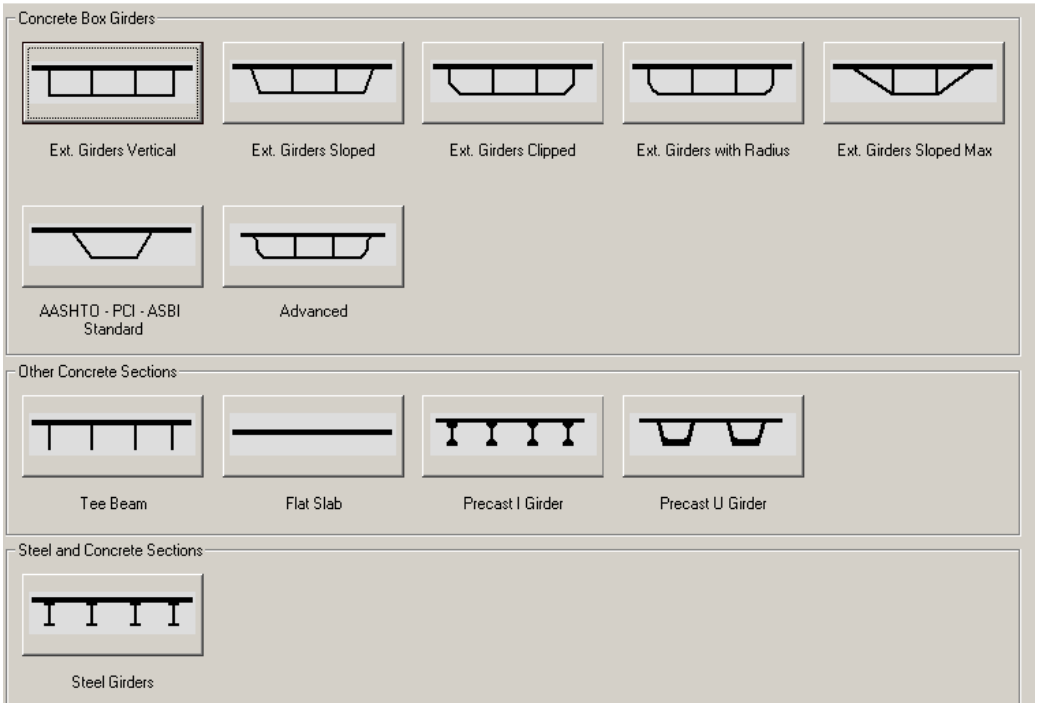

Figure 4.2-17 Various Bridge Sections.

c) Abutment Definition

Abutment definitions specify the support conditions at the ends of the bridge. The user defined support condition allows each six DOF at the abutment to be specified as fixed, free or partially restrained with a specified spring constant.

Those six Degrees of Freedom are:

U1- Translation Parallel to Abutment
U2- Translation Normal to Abutment
U3- Translation Vertical
R1- Rotation about Abutment
R2- Rotation About Line Normal to Abutment
R3- Rotation about Vertical
For Academy Bridge consider U2, R1 and R3 DOF directions to have a "Free" release type and other DOF fixed.

d) Bent Definition

This part specifies the geometry and section properties of bent cap beam and bent cap columns (single or multiple columns) and base support condition of the bent columns.

The base support condition for a bent column can be fixed, pinned or user defined as a specified link/support property which allows six degrees of freedom.

For Example Bridge enter the column base supports as pinned. All units should be kept consistent (kip-ft for this example).

The locations of columns are defined as distance from left end of the cap beam to the centerline of the column and the column height is the distance from the mid-cap beam to the bottom of the column.

For defining columns use Bent definition under bridge wizard, then go to Define/show bents and go to Modify/show column data. The base column supports at top and bottom will be defined here.

e) Diaphragm Definition

Diaphragm definitions specify properties of vertical diaphragms that span transverse across the bridge. Diaphragms are only applied to area objects and solid object models and not to spine models. Steel diaphragm properties are only applicable to steel bridge sections.

f) Hinge Definition

Hinge definitions specify properties of hinges (expansion joints) and restrainers. After a hinge is defined, it can be assigned to one or more spans in the bridge object.

A hinge property can be a specified link/support property or it can be user-defined spring. The restrainer property can be also a link/support or user defined restrainer. The user-restrainer is specified by a length, area and modulus of elasticity.

g) Parametric Variation Definition

Any parameter used in the parametric definition of the deck section can be specified to vary such as bridge depth, thickness of the girders and slabs along the length of the bridge. The variation may be linear, parabolic or circular.

h) Bridge Object Definition

The main part of the Bridge Modeler is the Bridge Object Definition which includes defining bridge span, deck section properties assigned to each span, abutment properties and skews, bent properties and skews, hinge locations are assigned, super elevations are assigned and pre-stress tendons are defined.

The user has two tendon modeling options for pre-stress data:

- Model as loads
- Model as elements

Since we calculate the pre-stress jacking force from CTBridge, use option (a) (layout line) to input the Tendon Load force. The user can input the Tendon loss parameters which have two parts:

1) Friction and Anchorage losses (Curvature coefficient, Wobble coefficient and anchorage setup).
2) Other loss parameters (Elastic shortening stress, Creep stress, Shrinkage stress and Steel relaxation stress).

When you input values for Friction and Anchorage losses, make sure the values match your CTBridge which should be based on "CALIFORNIA Amendments Table 5.9.5.2.2b-1 (Caltrans, 2014) and there is no need to input other loss parameters. If the user decides to model tendon as elements, the values for other loss parameters shall be input; otherwise, leave the default values.

Note:

- If you model the bridge as a Spine Model, only define one single tendon with total P_{jack} load. If you model the bridge with shell element, then you need to specify tendon in each girder and input the P_{jack} force for each girder which should be calculated as Total P_{jack} divided by number of the girders.
- Anytime a bridge object definition is modified, the link model must be updated for the changes to appear in /CSiBridge model.

i) Update Linked Model

The update linked model command creates the CSiBridge object-based model from the bridge object definition. Figures 4.2-18 and 4.2-19 show an area object model and a solid object model, respectively. Note that an existing object will be deleted after updating the linked model. There are three options in the Update Linked Model including:

- Update a Spine Model using Frame Objects
- Update as Area Object Model
- Update as Solid Object Model

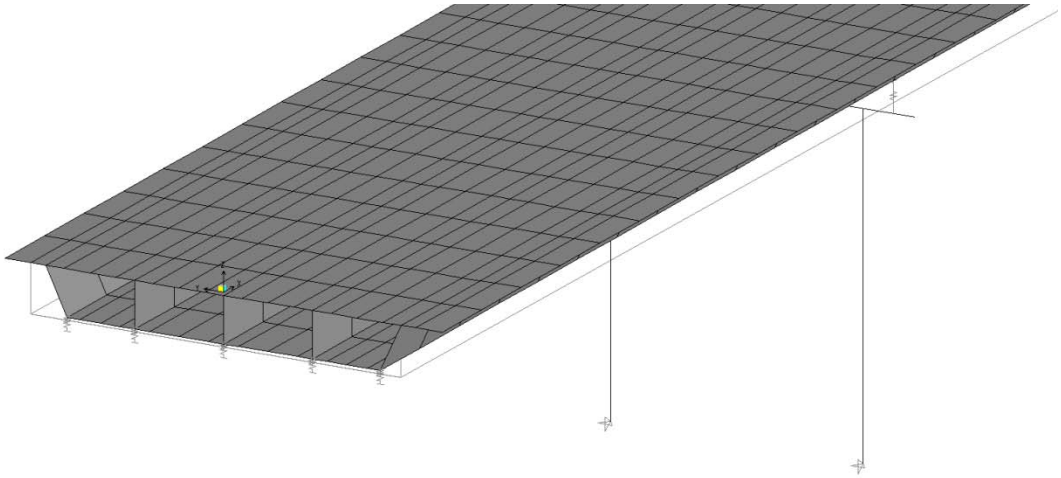

Figure 4.2-18 Area Object Model.

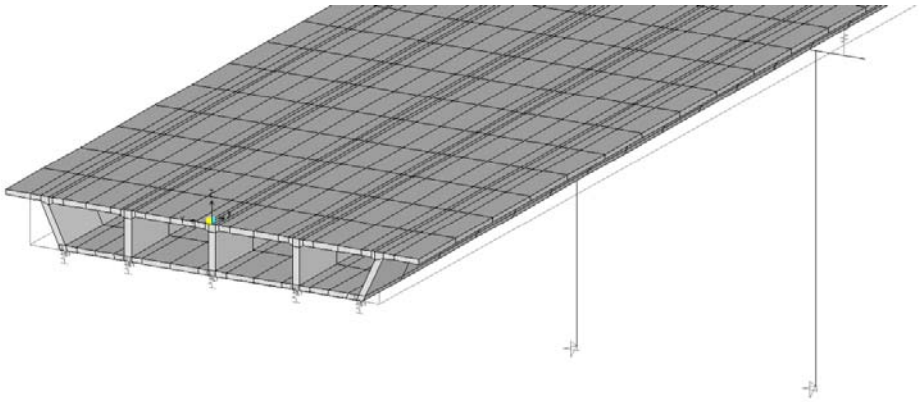

Figure 4.2-19 Solid Object Model

Other analysis steps include:

- Parametric Bridge Modeling
  - Layered Shell Element
  - Lane Definition Using Highway Layout or Frame Objects
  - Automatic Application of Lane Loads to Bridge
  - Predefined Vehicle and Train Loads

- Bridge Results & Output
  - Influence Lines and Surfaces
  - Forces and Stresses Along and Across Bridge

- Displacement Plots
- Graphical and Tabulated Outputs

CSiBridge also has an Advanced Analysis Option that is not discussed in this section including:

- Segmental Construction
- Effects of Creep, Shrinkage Relaxation
- Pushover Analysis using Fiber Models
- Bridge Base Isolation and Dampers
- Explicitly Model Contact Across Gaps
- Nonlinear Large Displacement Cable Analysis
- Line and Surface Multi-Linear Springs (P-y curves)
- High Frequency Blast Dynamics using Wilson FNA
- Nonlinear Dynamic Analysis & Buckling Analysis
- Multi-Support Seismic Excitation
- Animated Views of Moving Loads

The program has the feature of automated line constraints that enforce the displacement compatibility along the common edges of meshes as needed.

4.3 STRUCTURAL ANALYSIS

Structural Analysis provides the numerical mathematical process to extract structure responses under service and seismic loads in terms of structural demands such as member forces and deformations.

4.3.1 General

For any type of structural analysis, the following principles should be considered.

4.3.1.1 Equilibrium

a) Static Equilibrium

In a supported structure system when the external forces are in balance with the internal forces, or stresses, which exactly counteract the loads (Newton's Second Law), the structure is said to be in equilibrium.

Since there is no translatory motion, the vector sum of the external forces must be zero ($\Sigma\vec{F} = \vec{0}$). Since there is no rotation, the sum of the moments of the external forces about any point must be zero ($\Sigma\vec{M} = \vec{0}$).

b) Dynamic Equilibrium

When dynamic effects need to be included, whether for calculating the dynamic response to a time-varying load or for analyzing the propagation of waves in a structure, the proper inertia terms shall be considered for analyzing the dynamic equilibrium:

$$\Sigma F = m\ddot{u}$$

4.3.1.2 Constitutive Laws

The constitutive laws define the relationship between the stress and strain in the material of which a structure member is made.

4.3.1.3 Compatibility

Compatibility conditions are referred to continuity or consistency conditions on the strains and the deflections. As a structure deforms under a load, we want to ensure that:

a) Two originally separate points do not merge into a single point.
b) Perimeter of a void does not overlap as it deforms.
c) Elements connected together remain connected as the structure deforms.

4.3.2 Analysis Methods

Different types of analysis are discussed in this section.

4.3.2.1 Small Deflection Theory

If the deformation of the structure doesn't result in a significant change in force effects due to an increase in the eccentricity of compressive or tensile forces, such secondary force effects may be ignored. Small deflection theory is usually adequate for the analyses of beam-type bridges. Suspension bridges, very flexible cable-stayed bridges and some arches rather than tied arches and frames in which flexural moments are increased by deflection are generally sensitive to deflections. In many cases the degree of sensitivity can be evaluated by a single-step approximate method, such as moment magnification factor method (AASHTO 4.5.3.2.2).

4.3.2.2 Large Deflection Theory

If the deformation of the structure results in a significant change in force effects, the effects of deformation shall be considered in the equations of equilibrium. The effect of deformation and out-of-straightness of components shall be included in stability analysis and large deflection analyses. For slender concrete compressive components, time-dependent and stress-dependent material characteristics that cause significant changes in structural geometry shall be considered in the analysis.

Because large deflection analysis is inherently nonlinear, the displacements are not proportional to applied load, and superposition cannot be used. Therefore, the order of load application are very important and should be applied in the order experienced by the structure, i.e. dead load stages followed by live load stages, etc. If the structure undergoes nonlinear deformation, the loads should be applied incrementally with consideration for the changes in stiffness after each increment.

4.3.2.3 Linear Analysis

In the linear relation of stress-strain of a material, Hooke's law is valid for small stress-strain range. For linear elastic analysis, sets of loads acting simultaneously can be evaluated by superimposing (adding) the forces or displacements at the particular point.

4.3.2.4 Non-linear Analysis

The objective of non-linear analysis is to estimate the maximum load that a structure can support prior to structural instability or collapse. The maximum load which a structure can carry safely may be calculated by simply performing an incremental analysis using non-linear formulation. In a collapse analysis, the equation of equilibrium is for each load or time step.

Design based on assumption of linear stress-strain relation will not always be conservative due to material or physical non-linearity. Very flexible bridges, e.g. suspension and cable-stayed bridges, should be analyzed using nonlinear elastic methods (LRFD C4.5.1, AASHTO, 2012).

P-Delta effect is an example of physical (geometrical) non-linearity, where principle of superposition doesn't apply since the beam-column element undergoes large changes in geometry when loaded.

4.3.2.5 Elastic Analysis

Service and fatigue limit states should be analyzed as fully elastic, as should strength limit states, except in the case of certain continuous girders where inelastic analysis is permitted, inelastic redistribution of negative bending moment and stability investigation (LRFD C4.5.1, AASHTO, 2012).

When modeling the elastic behavior of materials, the stiffness properties of concrete and composite members shall be based upon cracked and/or uncracked sections consistent with the anticipated behavior (LRFD 4.5.2.2, AASHTO, 2012). A limited number of analytical studies have been performed by Caltrans to determine effects of using gross and cracked moment of inertia. The specific studies yielded the following findings on prestressed concrete girders on concrete columns:

1) Using I_{gs} or I_{cr} in the concrete columns do not significantly reduce or increase the superstructure moment and shear demands for external vertical loads, but will significantly affect the superstructure moment and shear demands from thermal and other lateral loads (CA C4.5.2.2, Caltrans, 2014a). Using I_{cr} in the columns can increase the superstructure deflection and camber calculations (CA 4.5.2.2, Caltrans, 2014a).

Usually an elastic analysis is sufficient for strength-based analysis.

4.3.2.6 Inelastic Analysis

Inelastic analysis should be used for displacement-based analysis (Akkari and Duan, 2014).

The extreme event limit states may require collapse investigation based entirely on inelastic modeling. Where inelastic analysis is used, a preferred design failure mechanism and its attendant hinge locations shall be determined (LRFD 4.5.2.3, AASHTO, 2012).

4.3.2.7 Static Analysis

Static analysis mainly used for bridges under dead load, vehicular load, wind load and thermal effects. The influence of plan geometry has an important role in static analysis (AASHTO 4.6.1). One should pay attention to plan aspect ratio and structures curved in plan for static analysis.

- Plan Aspect Ratio
  If the span length of a superstructure with torsionally stiff closed crossed section exceeds 2.5 times its width, the superstructure may be idealized as a single-spine beam. Simultaneous torsion, moment, shear and reaction forces and the attendant stresses are to be superimposed as appropriate. In all equivalent beam idealizations, the eccentricity of loads should be taken with respect to the centerline of the equivalent beam.

- Structure curved in plan
  Horizontally cast-in-place box girders may be designed as single spine beam with straight segments, for central angles up to 34° within one span, unless concerns about other force effects dictate otherwise. For I-girders, since equilibrium is developed by the transfer of load between the girders, the analysis must recognize the integrated behavior of all structure components.

Small deflection theory is adequate for the analysis of most curved-girder bridges. However curved I-girders are prone to deflect laterally if not sufficiently braced during erection. This behavior may not be well recognized by small deflection theory.

4.3.2.8 Equivalent Static Analysis (ESA)

It is used to estimate seismic demands for ordinary bridge structures as specified in Caltrans SDC (Caltrans, 2013). A bridge is usually modeled as Single-Degree-of-Freedom (SDOF) and seismic load applied as equivalent static horizontal force. It is suitable for individual frames with well balanced spans and stiffness. Caltrans SDC (Caltrans, 2013) recommends stand-alone "Local" Analysis in Transverse & Longitudinal direction for demands assessment. Figure 4.3-1 shows a stand-alone model with lumped masses at columns, rigid body rotation, and half span mass at adjacent columns.

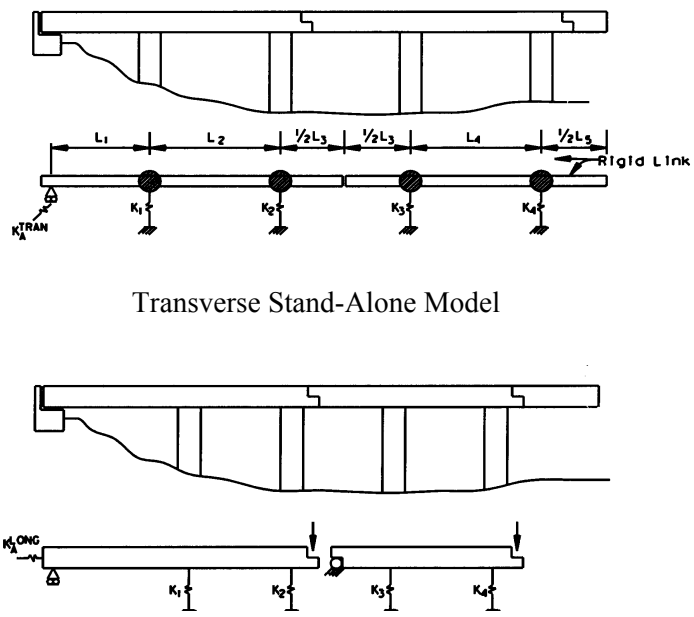

Transverse Stand-Alone Model

Longitudinal Stand-Alone Model

Figure 4.3-1 Stand Alone Model.

Types of Equivalent Static Analysis such as Lollipop Method, Uniform Load Method and Generalized Coordinate Method can be used.

4.3.2.9 Nonlinear Static Analysis (Pushover Analysis)

Nonlinear Incremental Static Procedure is used to determine displacement capacity of a bridge structure.

Horizontal loads are incrementally increased until a structure reaches collapse condition or collapse mechanism. Change in structure stiffness is modeled as member stiffness due to cracking, plastic hinges, yielding of soil spring at each step (event).

Analysis Programs are available such as: WFRAME, CSiBridge, STRUDL, SC-Push 3D, ADINA.

Figures 4.3-2 and 4.3-3 shows typical force-displacement and moment-curvature for a concrete column.

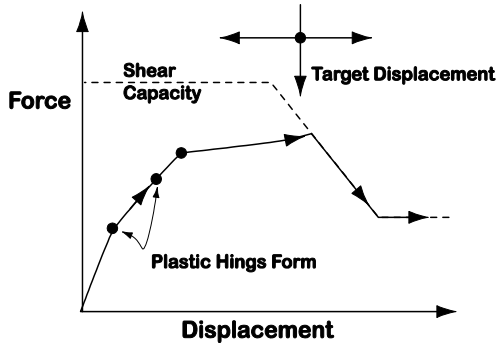

Figure 4.3-2 Pushover curve.

a) Pushover Analysis - Requirements

- Linear Elastic Structural Model
- Initial or Gravity loads
- Characterization of all Nonlinear actions - multi-linear force-deformation relationships (e.g. plastic hinge moment-curvature relationship)
- Limits on strain based on design performance level to compute moment curvature relationship of nonlinear hinge elements.
- Section Analysis—> Strain—> Curvature
- Double Integration of curvature—> Displacements
- Track design performance level strain limits in structural response

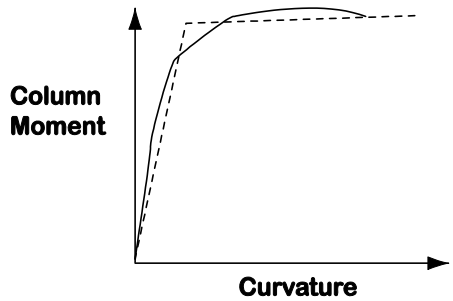

Figure 4.3-3 A Typical Moment-Curvature Curve for a Concrete Column.

4.3.2.10 General Dynamic Equilibrium Equation

The dynamic equation of motion for a typical SDOF is:

$$F_{Input} = F_I + F_D + F_S$$

Where:

F_1 = $mass \times acceleration = m\ddot{u}$
F_D = $Damping\ const \times Velocity = m\dot{u}$
F_S = $Stiffness \times Deformation = ku$
m = mass $= \rho_s V = \dfrac{Weight}{g}$
ρ_s = Material mass density
V = Element volume $= A \times L$
K = stiffness
c = damping constant $= z \times c_{cr}$
c_{cr} = critical damping $= 2 \times m \times w$
z = damping-ratio $= \dfrac{0.5 \times p \times EDC}{ku^2}$
EDC = Energy dissipated per cycle
U = displacement

In addition to earthquakes, wind and moving vehicles can cause dynamic loads on bridge structures.

Wind load may induce instability and excessive vibration in long-span bridges. The interaction between the bridge vibration and wind results in two kind of forces: motion-dependent and motion-independent. The motion dependent force causes aerodynamic instability with emphasis on vibration of rigid bodies. For short span bridges the motion dependent part is insignificant and there is no concern about aerodynamic instability. The bridge aerodynamic behavior is controlled by two types of parameters: structural and aerodynamics. The structure parameters are the bridge layout, boundary condition, member stiffness, natural modes and frequencies. The aerodynamic parameters are wind climate, bridge section shape. The aerodynamic equation of motion is expressed as:

$$m\ddot{u} + c\dot{u} + ku = FU_{md} + F_{mi}$$

Where:

FU_{md} = motion-dependent aerodynamic force vector
F_{mi} = motion-independent wind force vector

For a detailed analytical solution for effect of wind on long span bridges and cable vibration, see (Cai, etl al., 2014).

4.3.2.11 Free Vibration Analysis

Vehicles such as trucks and trains passing bridges at certain speed will cause dynamic effects. The dynamic loads for moving vehicles on bridges are counted for by a dynamic load allowance, IM. See (Duan, et al., 1999).

Major characteristics of the bridge dynamic response under moving load can be summarized as follows:

Impact factor increases as vehicle speed increases, impact factor decreases as bridge span increases.

Under the condition of "Very good" road surface roughness (amplitude of highway profile curve is less than 0.4 in.) the impact factor is well below the design specifications. But the impact factor increases tremendously with increasing road surface roughness from "good" to "poor" (the amplitude of the roadway profile is more than 1.6 in.) beyond the impact factor specified in AASHTO LRFD Specifications.

Field tests indicate that in the majority of highway bridges, the dynamic component of the response does not exceed 25% of the static response to vehicles with the exception of deck joints. For deck joints, 75% of the impact factor is considered for all limit states due to hammer effect, and 15% for fatigue and fracture limit states for members vulnerable to cyclic loading such as shear connectors, see CA - C3.6.2.1 (Caltrans, 2014a) to AASHTO LRFD (AASHTO, 2012).

Dynamic effects due to moving vehicles may be attributed to two sources:

- Hammering effect is the dynamic response of the wheel assembly to riding surface discontinuities, such as deck joints, cracks, potholes and delaminations.
- Dynamic response of the bridge as a whole to passing vehicles, which may be due to long undulations in the roadway pavement, such as those caused by settlement of fill, or to resonant excitation as a result of similar frequencies of vibration between bridge and vehicle. (AASHTO LRFD C3.6.2.1)

The magnitude of dynamic response depends on the bridge span, stiffness and surface roughness, and vehicle dynamic characteristics such as moving speed and isolation systems. There have been two types of analysis methods to investigate the dynamic response of bridges due to moving load:

- Numerical analysis (Sprung mass model).
- Analytical analysis (Moving load model).

The analytical analysis greatly simplifies vehicle interaction with bridge and models a bridge as a plate or beam with a good accuracy if the ratio of live load to self weight of the superstructure is less than 0.3.

Free vibration analysis assuming a sinusoidal mode shape can be used for the analysis of the superstructure and calculating the fundamental frequencies of slab-beam bridges (Zhang, et al., 2014).

For long span bridges or low speed moving load, there is little amplification which does not result in much dynamic responses.

Maximum dynamic response happens when load frequency is near the bridge fundamental frequency.

The aspect ratios of the bridge deck play an important role. When they are less than 4.0 the first mode shape is dominant, when more than 8.0, other mode shapes are excited.

Free-Vibration Properties are shown in Figure 4.3-4.

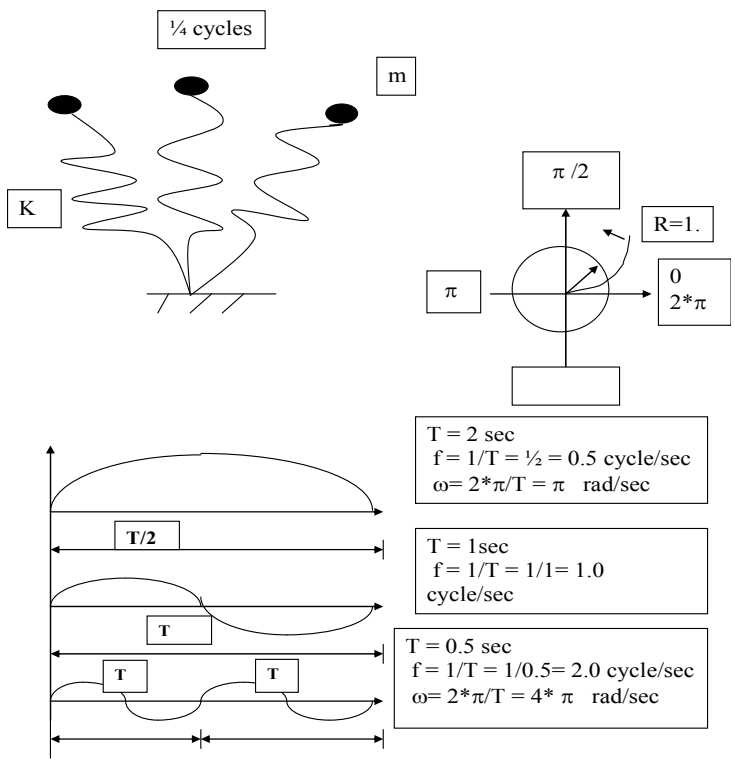

Figure 4.3-4 Natural Period

a) Cycle: When a body vibrates from its initial position to its extreme positive position in one direction, back to extreme negative position, and back to initial position (i.e., one revolution of angular displacement of 2π) (radians)

b) Frequency (ω): If a system is disturbed and allowed to vibrate on its own, without external forces and damping (free Vibration).

A system having *n* degrees of freedom will have, in general, *n* distinct natural frequencies of vibration.

$$\omega = \sqrt{K / m}$$

$$\omega = \frac{2\pi}{T} = \text{distance/time}$$

$\omega = 2\pi f$

c) Period (T): Is the time taken to complete one cycle of motion. It is equal to the time required for a vector to rotate 2π (one round)

d) Frequency (f): The number of cycles per unit time, $f = 1/T$ (H.Z)

4.4 BRIDGE EXAMPLES – 3-D VEHICLE LIVE LOAD ANALYSIS

4.4.1 Background

The United States has a long history of girder bridges being designed "girder-by-girder". That is, the girder is designed for some fraction of live loads, depending on girder spacing and structure type. The method is sometimes referred to as "girder line" or "beam line" analysis and the fraction of live load lanes used for design is sometimes referred to as a grid or Load Distribution Factor (LDF).

The approximate methods of live-load distribution in the *AASHTO LRFD Bridge Design Specifications* (AASHTO, 2012) use "girder load distribution factors" (LDFs) to facilitate beam analysis of multiple vehicular live loads on a three-dimensional bridge structural system. The formal definition of LDF: "*a factor used to multiply the total longitudinal response of the bridge due to a single longitudinal lane load in order to determine the maximum response of a single girder*" (Barker and Puckett 2013). A more practical definition: the ratio $M_{refined}/M_{beam}$ or $V_{refined}/V_{beam}$, where the numerator is the enveloped force effect at one location, and the denominator is force effect at the same location in a single girder due to the same load.

- Although each location within a girder can have a different LDF, the expressions in the tables of *AASHTO LRFD BRIDGE SPECIFICATIONS*, Articles 4.6.2.2.2 and 4.6.2.2.3 are based on the critical locations for bending and shear, respectively. Critical locations refer to maximum absolute positive moments, negative moments, and maximum absolute shear. For cast-in-place (CIP) concrete multicell box girders, the AASHTO tables only apply to typical bridges, which refer to:

  - Girder spacing, S: $7' < S < 13'$
  - Span length, L: $60' < L < 240'$ (AASHTO 4.6.2.2.2b-1)
  - The CA Amendments (CA Table 4.6.2.2.2b-2) provides the LDF for one cell, and two cell boxes based on:
  - Span Length, L: $60' < L < 240'$
  - Structure Depth, d, $35'' < d < 110''$
- The use of approximate methods on less-typical structures is prohibited. The less-typical structures refer to either one of the following cases:

  - Two or three-girder beam-slab structures;
  - Spans greater than 240 ft in length;

- Structures with extra-wide overhangs (greater than one-half of the girder spacing or 3 ft).

- Three-dimensional (3D) finite element analysis (FEA) must be used to determine the girder LDFs of these less-typical bridges. The following cases may also require such refined analysis:

  - Skews greater than 45°;
  - Structures with masonry sound walls;
  - Beam-slab structures with beams of different bending stiffness.

- A moving load analysis on a 3D finite element (FE) model provides accurate load distribution. However, for routine design of commonly used bridge superstructure system, 3D FEA requires the familiarity with sophisticated, usually also expensive, finite element methods.

  FEM software. It may not be economical due to the additional time required to build and run the 3D model, and analyze the results, comparing to simple FEM program, e.g. Caltrans.

- CTBridge. In addition, in terms of the reliability of an FE model, 3D FEM model may not be as reliable as a simple 2D FE model due to the much greater number of details in a 3D FE model. Based on Caltrans experience, a combination of LDF formula with the in-house 2D FEM design program, CTBridge, provides sufficient, reliable and efficient design procedure and output. The latest version of CTBridge includes the LDF values for a one- or two-cell box-girder bridge.

4.4.2 Moving Load Cases

In many situations, the one- or two-cell box girders are for widening of existing bridges. If they are new bridges, it is also possible that they will be widened in the future. Both cases imply that the traffic loads may be applied anywhere across the bridge width, i.e., edge to edge, and this shall be taken into account in design. This also means that one wheel line of the truck can be on the new/widened bridge, while the other one on the existing bridge. As one can imagine, for certain bridge width, the maximum force effect may be due to, say, 1.5 or 2.5 lanes. For particularly narrow bridge, e.g., 6 or 8 ft. bridge, probably only one wheel line load can be applied.

CSiBridge (CSI, 2015) has the capability to permute all the possible vehicular loading patterns once a set of lanes is defined. First, the entire bridge response due to a single lane loaded, without the application of the Multiple Presence Factor (MPF), can be easily obtained by arbitrarily defining a lane of any width within the bridge. Then, lane configurations that would generate the maximum shear and moment effects would be defined and the MPF would be defined. The cases where one lane is loaded are important for fatigue design; in addition, the cases where one lane is

loaded may control over the cases where two lanes are loaded. Therefore, the cases where one lane is loaded are separated from the permutation and are defined based on a single lane of the whole bridge width.

AASHTO standard design vehicular live loads, HL-93, are used as the traffic load for the CSiBridge analyses of the live load distribution factor. Figure 4.4-1 shows the elevation view of the four types of design vehicles per lane, including the details of the axle load and axle spacing. Transverse spacing of the wheels for design truck and design tandem is 6 ft. The transverse width of the design lane load is 10 ft. The extreme force effect, moment and shear in girders for this study, at any location of any girder, are the largest from the 4 design vehicles:

- HL-93K: design tandem and design lane load;
- HL-93M: design truck and design lane load;
- HL-93S: 90% of two design trucks and 90% of the design lane load;
- HL-93LB: pair of one design tandem and one design lane load.

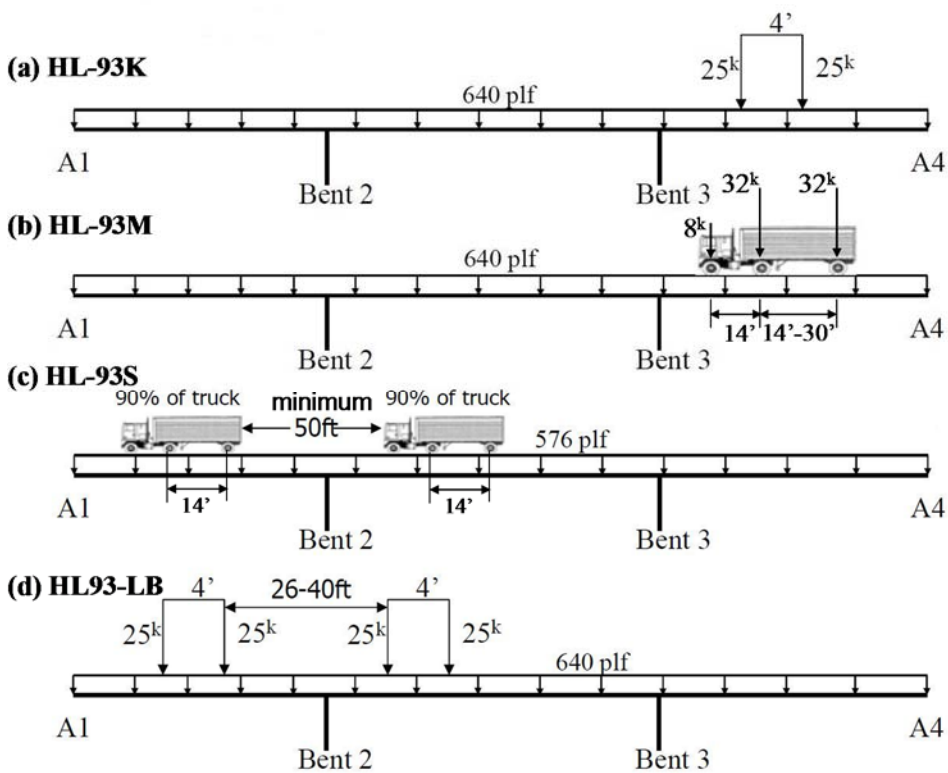

Figure 4.4-1 Elevation View of AASHTO Standard HL-93 Vehicular Live Loads (Caltrans).

Cases (c) and (d) in Figure 4.4-1 are for maximum negative moment over bent caps. A dynamic load allowance of 33% is applied and only applied to the design truck and design tandem in all cases. Multiple Presence Factor as shown in Table 4.4-1 is applied in accordance to *AASHTO LRFD Bridge Design Specifications*.

Table 4.4-1 Multiple Presence Factor (MPF)

Number of Loaded Lanes	Multiple Presence Factor
≤ 1	1.20
>1 and ≤ 2	1
>2 and ≤ 3	0.85

4.4.3 Live Load Distribution For One And Two-Cell Box Girders Example

Model Bridge in CSiBridge as given data below:

In this example, the method of calculating LLDF is shown for a two-cell box girder by using a 3D FEM-CSiBridge model for different lane loading (Figures 4.4-3 to 4.4-6). The bridge data is given as shown below:

- Girder spacing, *S*: 6′ < S =13′< 13′
- Span length, *L*: 60′ < L=180′ < 220′
- Structure depth, *D*: 35″ < d =96″< 110″

Single span, simply supported, 180 foot long, 8-foot depth two-cell Box Girder Bridge with the following cross section as shown in Figure 4.4-2.

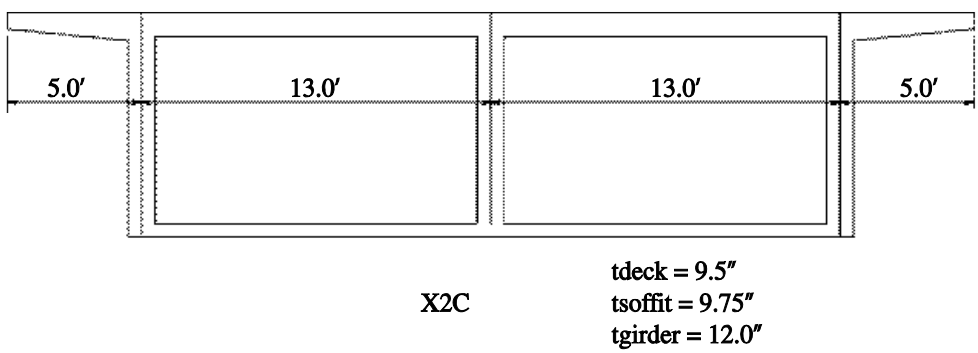

Figure 4.4-2 Live Load Distribution For Two-Cell Box Girders Snap Shot

1) Load groups

Load Group 1

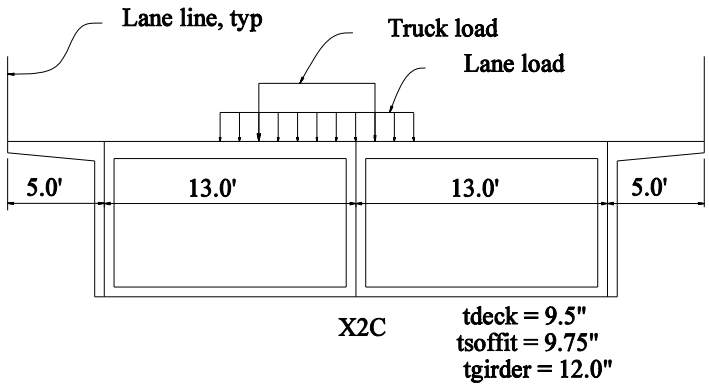

Figure 4.4-3 Live Load Distribution For Two-Cell Box Girders Snap Shot In Group 1

Load Group 2

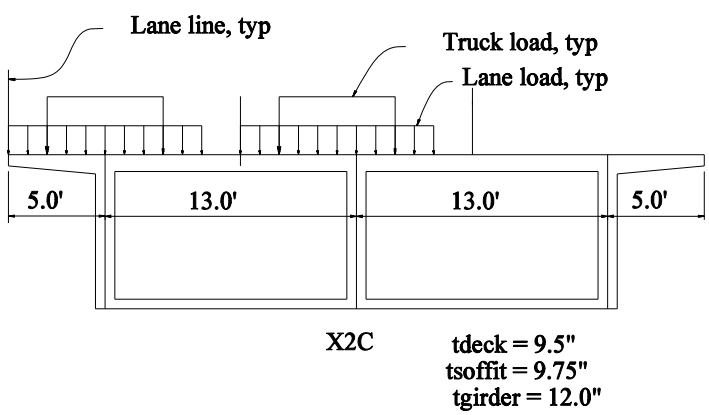

Figure 4.4-4 Live Load Distribution For Two-Cell Box Girders Snap Shot In Group 2

Load Group 3

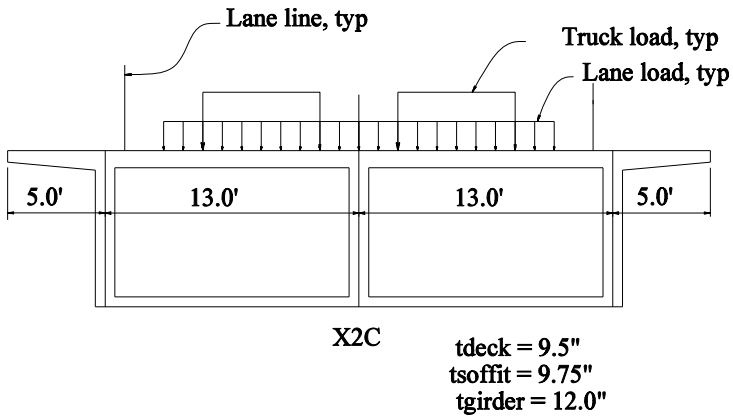

Figure 4.4-5 Live Load Distribution For Two-Cell Box Girders Snap Shot In Group 3

Load Group 4

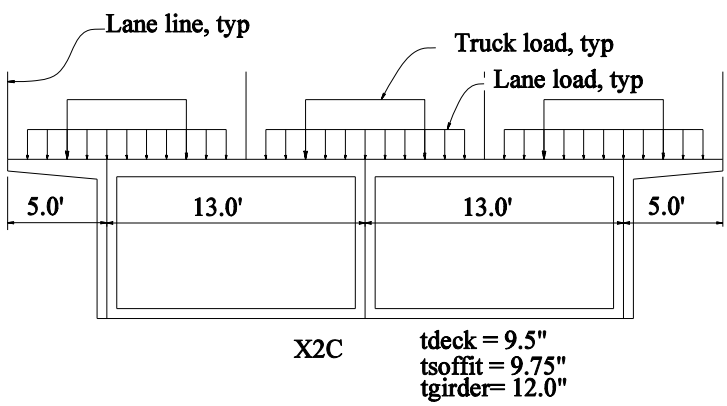

Figure 4.4-6 Live Load Distribution For Two-Cell Box Girders Snap Shot In Group 4

In order to calculate the LDF, both spine model and area object model were run for different lane loading using BrIM.

2) *Bridge Modeler* (Figure 4.4-7)

- Update Bridge Structural Model as Area Object Model

BrIM ⟶ Update Link Model ⟶ Update as Area Object

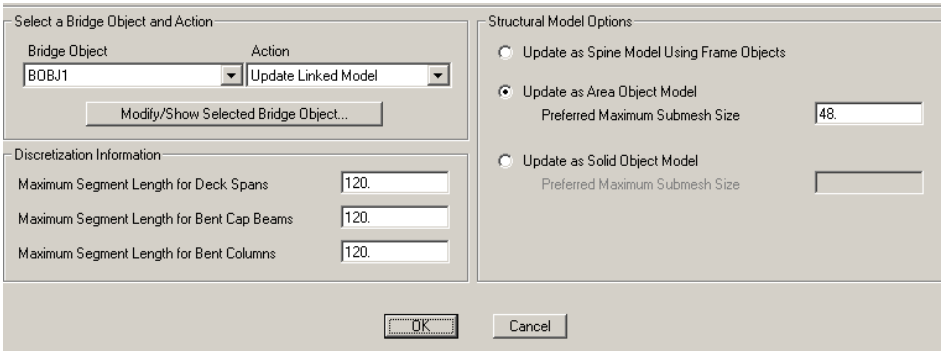

Figure 4.4-7 Bridge Modeler Snap Shot

3) *Define Lane* (Figure 4.4-8)

Define ⟶ Bridge loads ⟶ Lanes

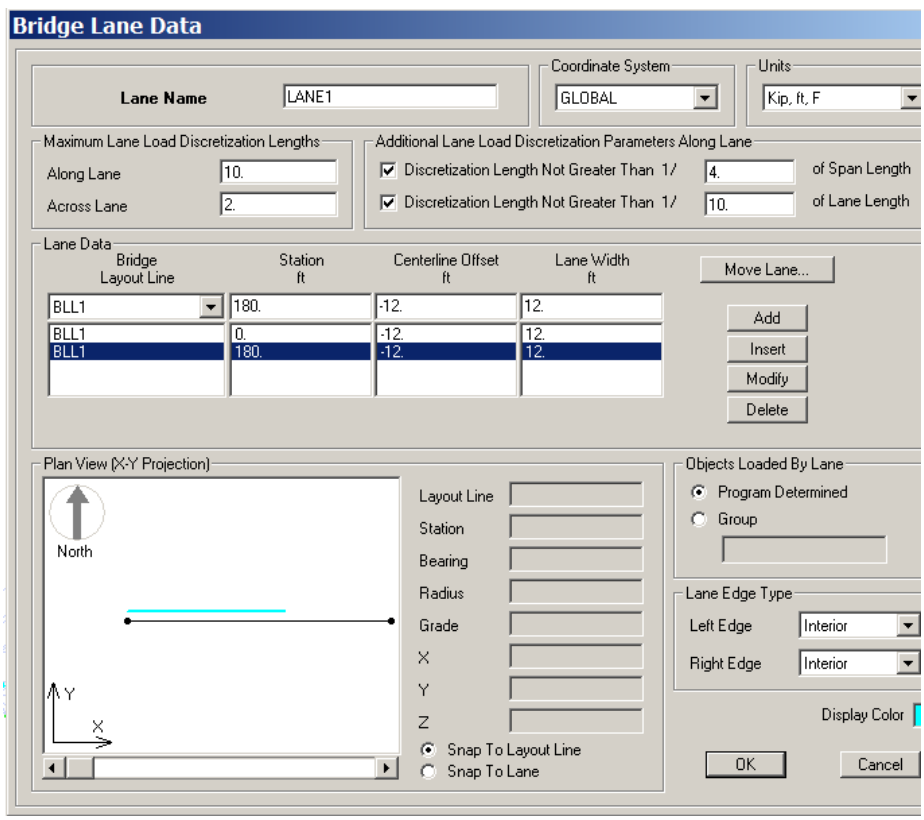

Figure 4.4-8 Define Lane Snap Shot

- Maximum Lane Load Discretization Lengths:
  Along Lane 10 ft
  Across Lane 2 ft

4) *Define Vehicle* (Figure 4.4-9)

Define ⟶ Bridge loads ⟶ Vehicles

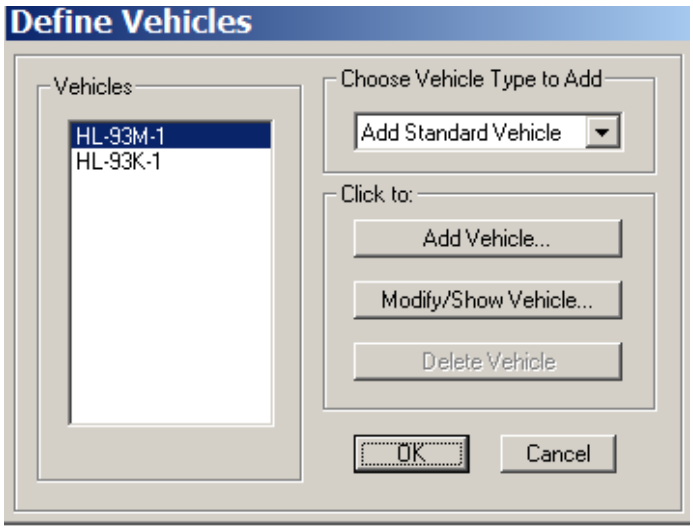

Figure 4.4-9 Define Vehicle Snap Shot

5) *Define Vehicle Classes* (Figure 4.4-10)

Define ⟶ Bridge loads ⟶ Vehicle classes:

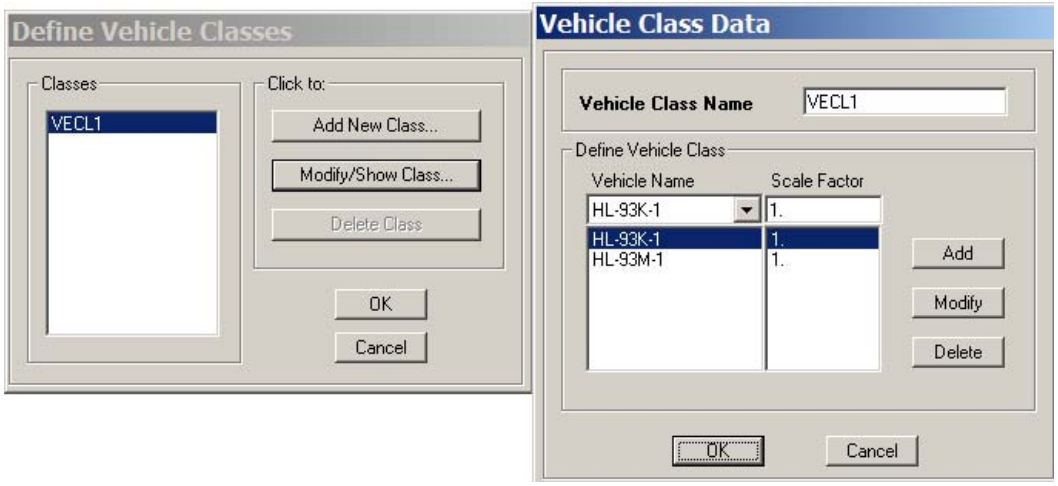

Figure 4.4-10 Define Vehicle Classes Snap Shot

6) *Analysis Cases* (Figure 4.4-11)

- Group1: 1 Lane loaded

Define ⟶ Load cases ⟶ Define Load cases

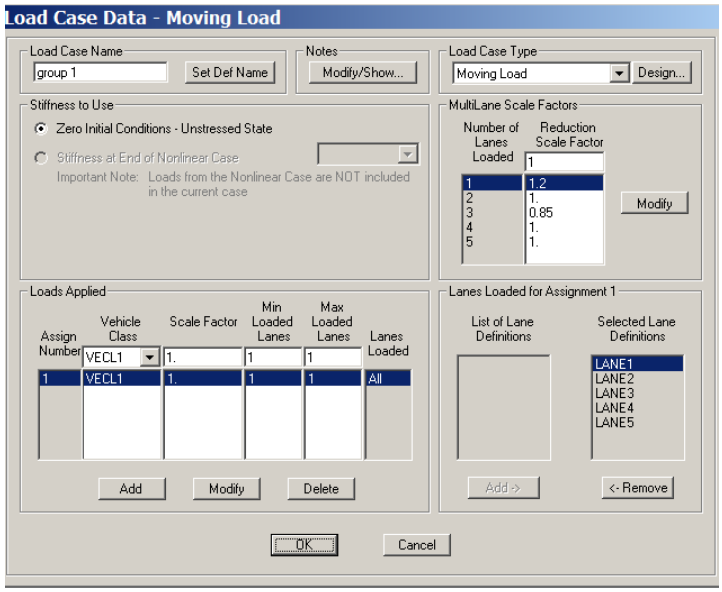

Figure 4.4-11 Analysis Cases Snap Shot In One-Lane Loaded

- Group 2: 2 Lane loaded (Lanes 1, 2 & 3) (Figure 4.4-12)

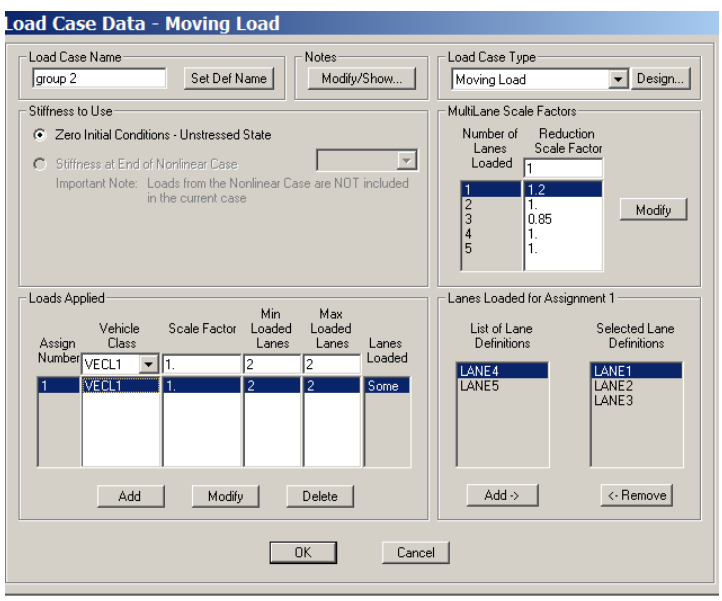

Figure 4.4-12 Analysis Cases Snap Shot in Two-Lane Loaded

- Group 3: 2 Lane loaded (Lanes 4 & 5)(Figure 4.4-13)

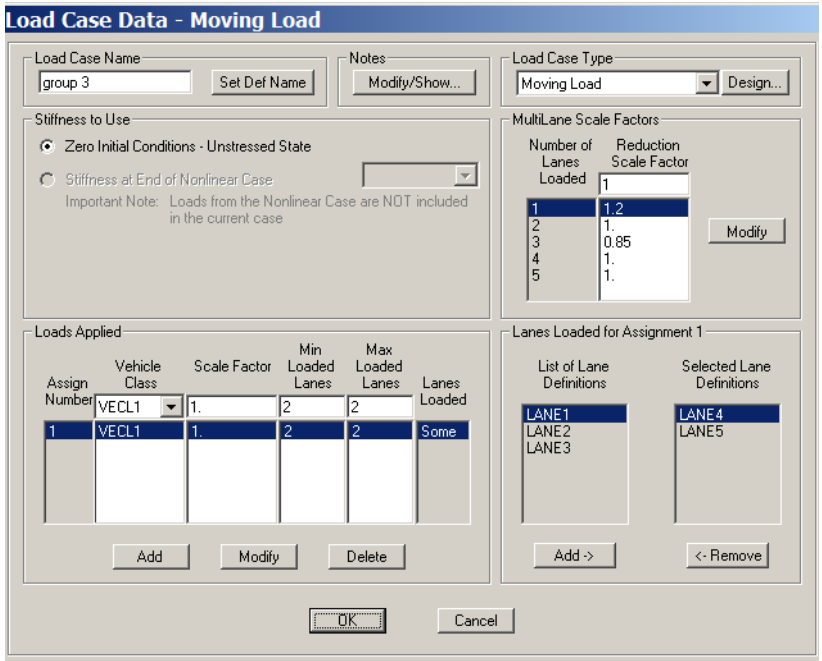

Figure 4.4-13 Analysis Cases Snap Shot in Two-Lane Loaded.

- Group 4: 3 Lane loaded (Lanes 1, 2 & 3) (Figure 4.4-14)

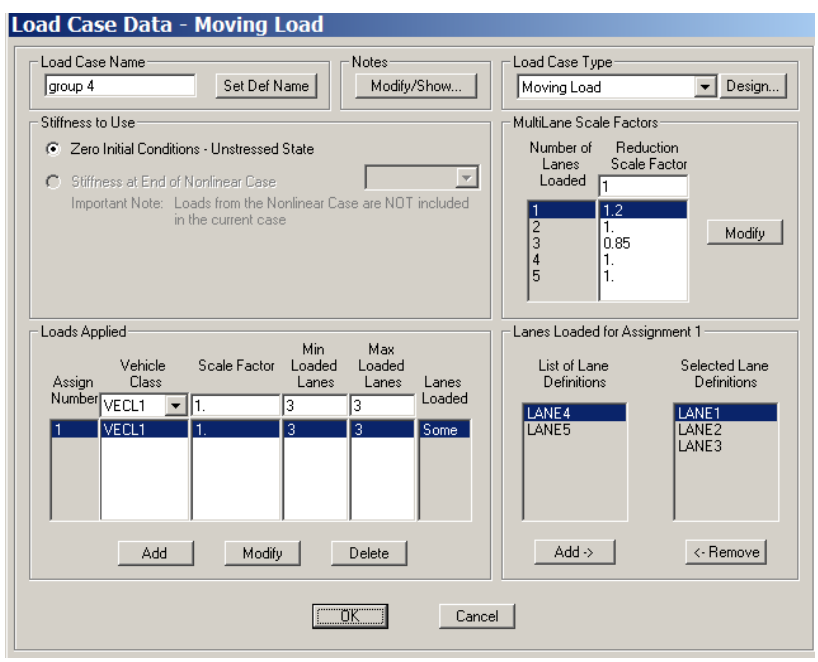

Figure 4.4-14 Analysis Cases Snap Shot in Three-Lane Loaded

7) *Analysis Single Lane Loaded* (MPF = 1) with running updated Bridge Structural Model as Spine Model (Figure 4.4-15)

BrIM ⟶ Update Link Model ⟶ Update as Spine Model ⟶ Define Lane ⟶ Define Load cases

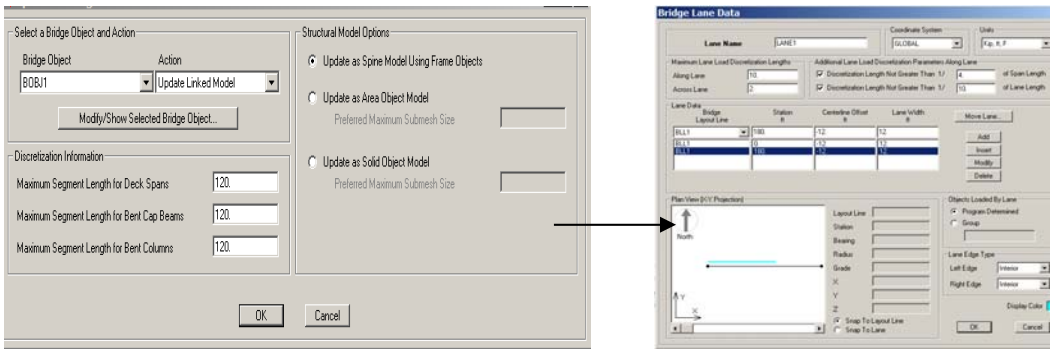

Figure 4.4-15 Analysis Single Lane Loaded Snap Shot

Results:

A) Display Bridge Forces at entire bridge width for 1 lane loaded from Spine Model (Figure 4.4-16):

A-1) Location and quantity of Maximum Forces:

The Maximum moment value = 6,527 Kips-ft at x = 90 ft

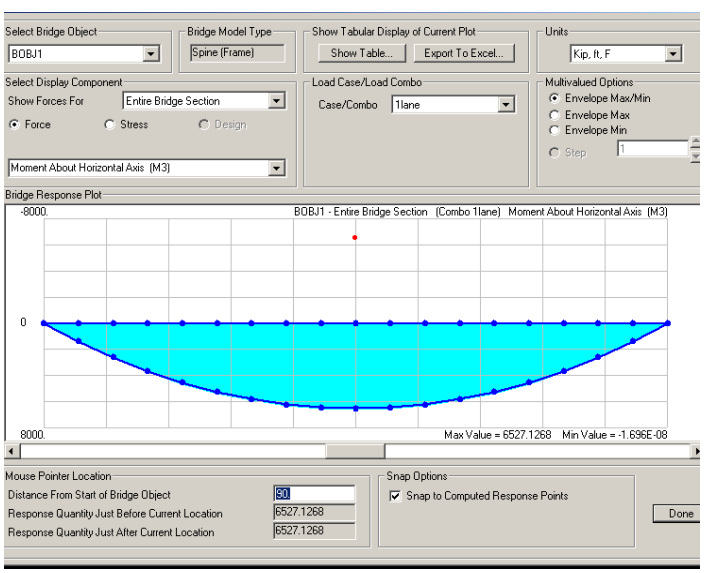

Figure 4.4-16 Maximum Moment Snap Shot

A-2) Location and quantity of Maximum Shear (Figure 4.4-17):

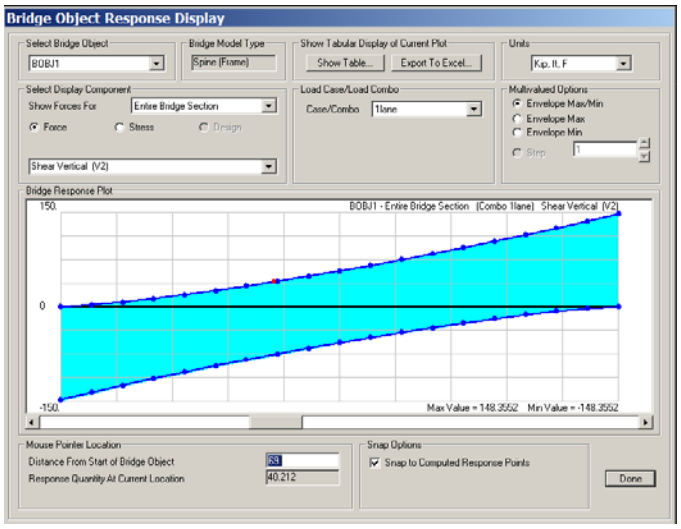

The Maximum shear value =148.35 Kips

Figure 4.4-17 Maximum Shear Snap Shot

B) Display Bridge Forces at each girder for one lane loaded for each group from Area Model:

B-1) Location and quantity of Maximum Moment at Left Exterior girder, Interior girder and Right Exterior girder for 1 lane, 2 lanes and 3 lanes loaded.

For example, Figures 4.4-18 to 4.4-20 show Maximum Moment for 1 lane loaded:

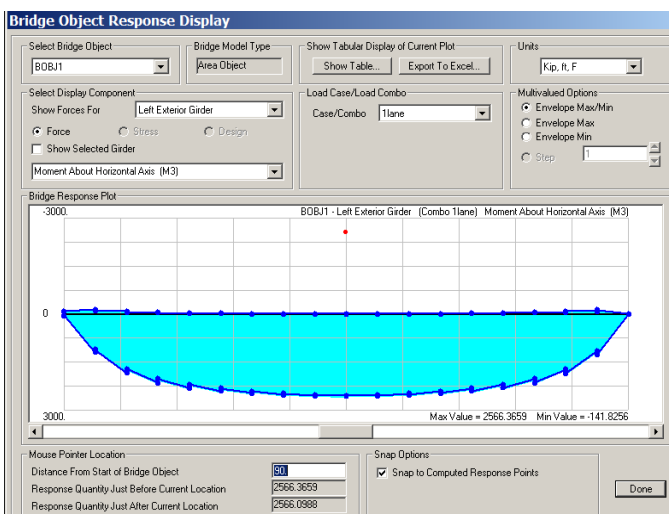

Left Exterior Girder, $M3$ = 2566 Kips-ft at x = 90 ft

Figure 4.4-18 Maximum Moment for One-Lane Loaded at Left Exterior Girder

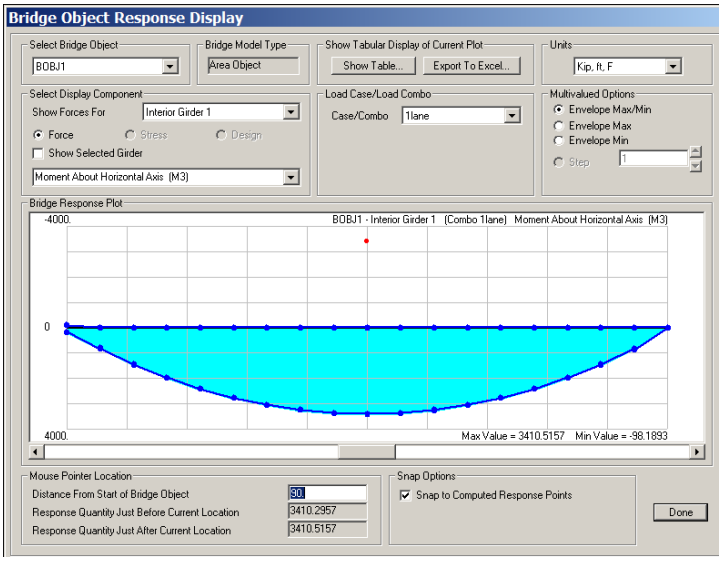

Interior Girder, $M3$ = 3410 Kips-ft at x = 90 ft

Figure 4.4-19 Maximum Moment for One-Lane Loaded at Interior Girder

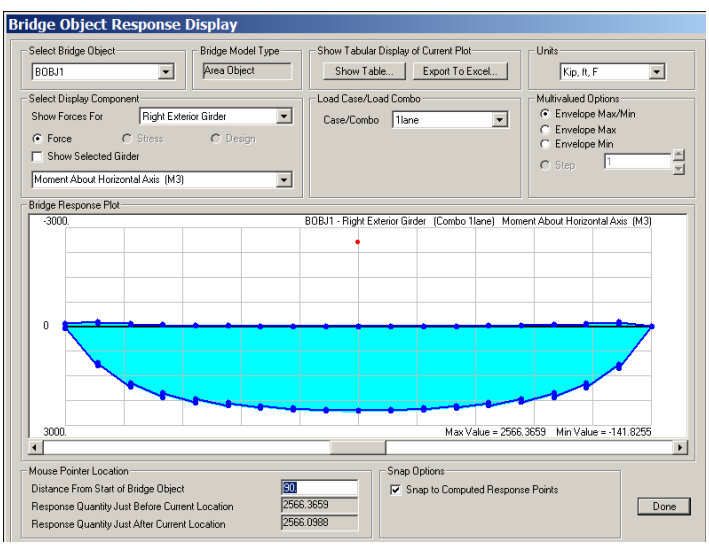

Right Exterior Girder, $M3$ = 2566 Kips-ft at x = 90 ft

Figure 4.4-20 Maximum Moment for One-Lane Loaded at Right Exterior Girder

B-2) Location and quantity of Maximum Shear at Left Exterior girder, Interior girder and Right Exterior girder for 1 lane, 2 lanes and 3 lanes Loaded.

Figures 4.4-21 to 4.4-23 show Maximum Shear for 1 Lane Loaded:

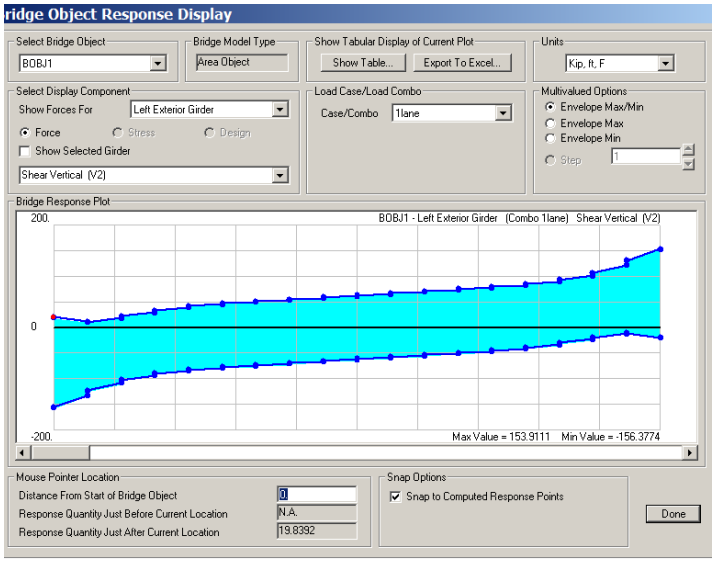

Shear at Left Exterior girder = 153.91 Kips at $x = 0$

Figure 4.4-21 Maximum Shear for One-Lane Loaded at Left Exterior Girder

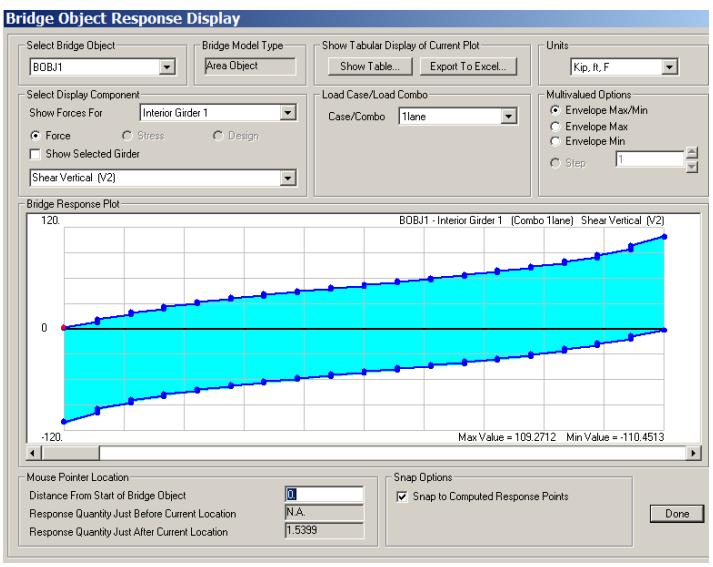

Shear at Interior Girder = 109.27 Kips at $x = 0$

Figure 4.4-22 Maximum Shear for One-Lane Loaded at Interior Girder

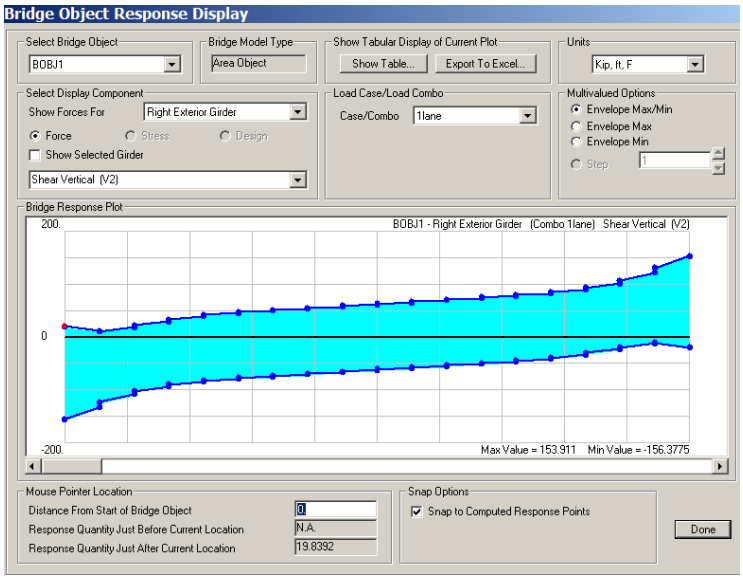

Shear at Right Exterior girder = 153.91 Kips at $x = 0$

Figure 4.4-23 Maximum Shear for One-Lane Loaded at Right Exterior Girder

C) Actual, Modified *LLDF*:

Shear (Table 4.4-2)

- Actual $LLDF = (V_{L.Ext.} + V_{Int.} + V_{R.Ext.}) / V_{Single\ lane}$
- Modified $LLDF = (Max\ (V_{L.Ext.}, V_{Int.}, V_{R.Ext.})) \times 3 / V_{Single\ lane}$

Table 4.4-2 Live Load Distribution Factor for Shear.

Case #	Cell Type	L (ft)	# Lanes	$V_{Single\ lane}$ (Kips)	$V_{L.Ext.}$ (Kips)	$V_{Int.}$ (Kips)	$V_{R.Ext.}$ (Kips)	$LLDF_{Actual}$	$LLDF_{Modified}$
1	X2C8	180	1	148.35	156.43	110.45	156.43	2.85	3.16
2	X2C8	180	2	148.35	172.18	165.82	172.18	3.44	3.48
3	X2C8	180	3	148.35	153.69	157.25	153.69	3.13	3.18

Moment (Table 4.4-3)

- Actual $LLDF = (M_{L.Ext.} + M_{Int.} + M_{R.Ext.}) / M_{Single\ lane}$
- Modified $LLDF = (Max\ (M_{L.Ext.}, M_{Int.}, M_{R.Ext.})) \times 3 / M_{Single\ lane}$

Table 4.4-3 Live Load Distribution Factor for Moment.

Case #	Cell Type	L (ft)	# Lanes	$M_{Single\ lane}$ (Kips-ft)	$M_{L.Ext.}$ (Kips-ft)	$M_{Int.}$ (Kips-ft)	$M_{R.Ext.}$ (Kips-ft)	$LLDF_{Actual}$	$LLDF_{Modified}$
1	X2C8	180	1	6527	2566.39	3410.52	2566.39	1.31	1.57
2	X2C8	180	2	6527	4045.82	5656.70	4045.82	2.11	2.60
3	X2C8	180	3	6527	4920.23	7074.28	4920.23	2.59	3.25

Although the CSiBridge analysis provides a more exact distribution of force effects in the girders, it doesn't calculate the amounts of prestressing, longitudinal, or shear reinforcement required on the contract plans. Different two-dimensional tools such as CTBridge are used for design. The girders are considered individually, or, lumped together into a single-spine model.

Caltrans prefers the latter in the case of post-tensioned box girders because post-tensioning in one girder has an effect on the adjacent girder.

If the individual demands were simply lumped together and used in two-dimensional software for design and the girders design equally, at least one girder would be under-designed. Hence, the value from the girder with the highest demand is used for all girders–as shown above, so it is recommended to consider LDF Modified, as the Live Load Lanes input for CTBridge.

NOTATION

A	=	area of section (ft^2)
d	=	structure depth (in.)
E	=	Young's modulus (ksi)
g	=	gravitational acceleration (32.2 ft/sec)
g_M	=	girder *LL* distribution factor for moment
g_S	=	girder *LL* distribution factor for shear
H	=	height of element (ft)
I	=	moment of inertia (ft^4)
K_g	=	longitudinal stiffness parameter ($in.^4$)
L	=	span length (ft)
M_{LL}	=	moment due to live load (kip-ft)
M_T	=	transverse moment on column (kip-ft)
M_L	=	longitudinal moment on column (kip-ft)
M_{DC}	=	moment due to dead load (kip-ft)
M_{DW}	=	moment due to dead load wearing surface (kip-ft)
$M_{HL\text{-}93}$	=	moment due to design vehicle (kip-ft)
M_{PERMIT}	=	moment due to permit vehicle (kip-ft)
M_{PS}	=	moment due to Secondary prestress forces (kip-ft)
n	=	modular ratio
N_b	=	number of beams
N_c	=	number of cells in the box girder section
S	=	center-to-center girder spacing (ft)
t_s	=	top slab thickness (in.)
t_{deck}	=	deck thickness (in.)
t_{soffit}	=	soffit thickness (in.)
t_{girder}	=	girder stem thickness (in.)
w	=	uniform load (kip/ft)
X	=	moment arm for overhang load (ft)
α	=	coefficient of thermal expansion
θ	=	skew angle (degrees)

REFERENCES

1. AASHTO, (2012). *AASHTO LRFD Bridge Design Specifications*, Customary U.S. Units (6th Edition), American Association of State Highway and Transportation Officials, 4th Edition, Washington, D.C.

2. ADINA, (2014). ADINA System, ADINA R & D, Inc., Watertown, MA.

3. Akkari, M. and Duan, L., "Chapter 5: Nonlinear Analysis," *Bridge Engineering Handbook*, *2nd Edition: Seismic Design*, Chen, W.F. and Duan, L., Ed., CRC Press. Boca Raton, FL.

4. Barker, R. M. and Puckett, J. A., (2013). *Design of Highway Bridges: A LRFD Approach,* 3rd Edition, John Wiley & Sons, Inc., New York, NY.

5. Cai, C.S., Zhang, W. and Montens, S., (2014) "Chapter 22: Wind Effects on Long Span Bridges," *Bridge Engineering Handbook*, *2nd Edition: Fundamentals*, Chen, W.F. and Duan, L., Ed., CRC Press. Boca Raton, FL.

6. Caltrans, (2014a). *California Amendments to AASHTO LRFD Bridge Design Specifications – 6th Edition*, California Department of Transportation, Sacramento, CA.

7. Caltrans, (2014b). *CTBRIDGE, Caltrans Bridge Analysis and Design v. 1.6.1*, California Department of Transportation, Sacramento, CA.

8. Caltrans, (2007). *Memo to Designers* 20-4 - *Earthquake Retrofit for Bridges,* California Department of Transportation, Sacramento, CA.

9. Caltrans, (2013). *Seismic Design Criteria*, *Version 1.7*, California Department of Transportation, Sacramento, CA.

10. CSI, (2015). *CSiBridge 2015*, *v. 17.0.0*, Computers and Structures, Inc., Walnut Creek, CA.

11. Duan, M., Perdikaris, P.C. and Chen, W. F., (1999). "Chapter 56: Impact Effect of Moving Vehicle," *Bridge Engineering Handbook*, Chen, W.F. and Duan, L., Ed., CRC Press. Boca Raton, FL.

12. Priestley, Seible and Calvi (1996). *Seismic Design and Retrofit of Bridges*, John Wiley & Sons, Inc., New York, NY.

13. Zhang, W., Vinyagamoorth, M. and and Duan, L., "Chapter 3: Dynamic," *Bridge Engineering Handbook*, *2nd Edition: Seismic Design*, Chen, W.F. and Duan, L., Ed., CRC Press. Boca Raton, FL.