Dist	COUNTY	ROUTE	POST MILES TOTAL PROJECT	SHEET No.	TOTAL SHEETS
11	SD	8	T0.5/R0.7	1	162

STATE OF CALIFORNIA

DEPARTMENT OF TRANSPORTATION

ACIM-008-1(322)E

PROJECT PLANS FOR CONSTRUCTION ON

STATE HIGHWAY

IN SAN DIEGO COUNTY IN SAN DIEGO FROM NIMITZ BOULEVARD TO 0.2 MILE WEST OF PRESIDIO PARK OVERCROSSING

TO BE SUPPLEMENTED BY STANDARD PLANS DATED 2010

INDEX OF PLANS

SHEET No.	DESCRIPTION
1	TITLE AND LOCATION MAP
2-9	TYPICAL CROSS SECTIONS
10	PROJECT CONTROL
11-40	CONSTRUCTION DETAILS
41	TEMPORARY WATER POLLUTION CONTROL QUANTITIES
42	CONSTRUCTION AREA SIGNS
43-59	TRAFFIC HANDLING PLANS AND QUANTITIES
60-69	PAVEMENT DELINEATION DETAILS AND QUANTITIES
70-86	SIGN PLANS, DETAILS AND QUANTITIES
87-94	SUMMARY OF QUANTITIES
95-108	ELECTRICAL PLANS
109-162	REVISED STANDARD PLANS

THE STANDARD PLANS LIST APPLICABLE TO THIS CONTRACT IS INCLUDED IN THE NOTICE TO BIDDERS AND SPECIAL PROVISIONS BOOK.

SAN DIEGO

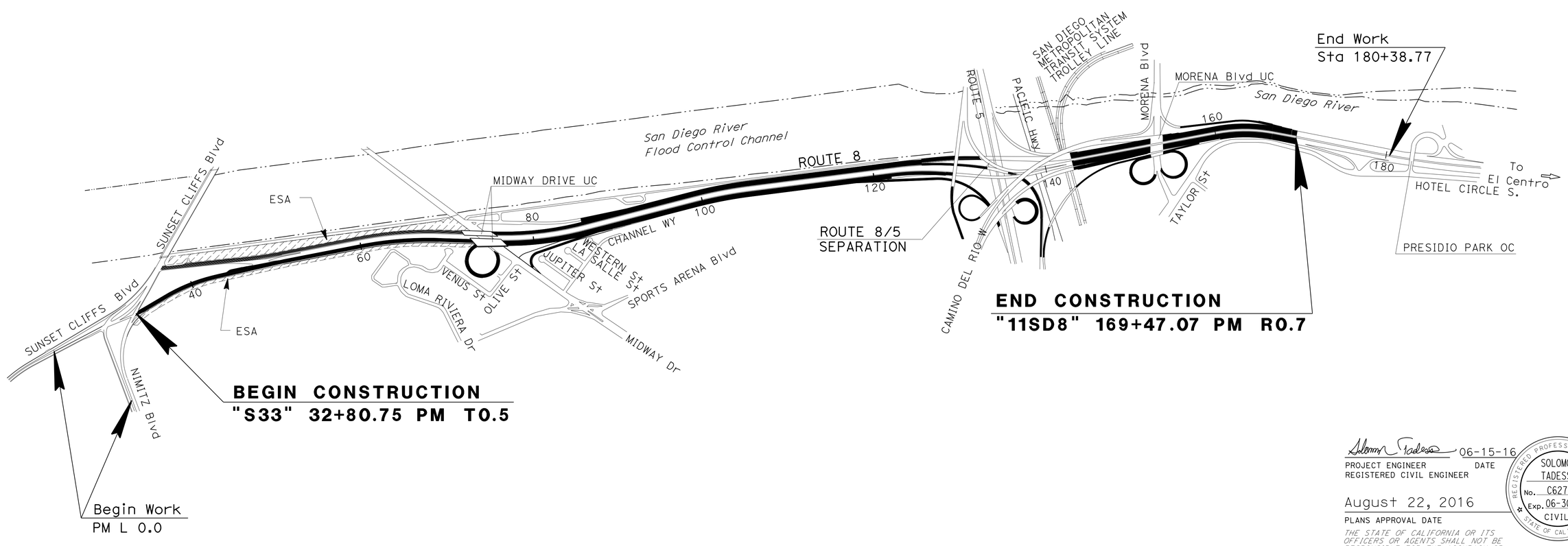

PROJECT MANAGER KAZIM MAMDANI

DESIGN ENGINEER KAZIM MAMDANI

06-15-16

PROJECT ENGINEER DATE
REGISTERED CIVIL ENGINEER

August 22, 2016

PLANS APPROVAL DATE

REGISTERED PROFESSIONAL ENGINEER SOLOMON TADESSE No. C62773 Exp. 06-30-18 CIVIL STATE OF CALIFORNIA

THE STATE OF CALIFORNIA OR ITS OFFICERS OR AGENTS SHALL NOT BE RESPONSIBLE FOR THE ACCURACY OR COMPLETENESS OF SCANNED COPIES OF THIS PLAN SHEET.

THE CONTRACTOR SHALL POSSESS THE CLASS (OR CLASSES) OF LICENSE AS SPECIFIED IN THE "NOTICE TO BIDDERS."

NO SCALE

CONTRACT No.	11-408604
PROJECT ID	1112000016

LAST REVISION 06-17-16

DATE PLOTTED => 04-OCT-2016
TIME PLOTTED => 11:28

Dist	COUNTY	ROUTE	POST MILES TOTAL PROJECT	SHEET No.	TOTAL SHEETS
11	SD	8	T0.5/R0.7	2	162

REGISTERED CIVIL ENGINEER 06-15-16 DATE

08-22-16
PLANS APPROVAL DATE

REGISTERED PROFESSIONAL ENGINEER SOLOMON TADESSE No. C62773 Exp. 06-30-18 CIVIL STATE OF CALIFORNIA

THE STATE OF CALIFORNIA OR ITS OFFICERS OR AGENTS SHALL NOT BE RESPONSIBLE FOR THE ACCURACY OR COMPLETENESS OF SCANNED COPIES OF THIS PLAN SHEET.

NOTES:

1. DIMENSIONS OF THE PAVEMENT STRUCTURES (STRUCTURAL SECTIONS) ARE SUBJECT TO TOLERANCES SPECIFIED IN THE STANDARD SPECIFICATIONS.
2. EXISTING UTILITIES HAVE NOT BEEN PLOTTED ON THESE PLANS.
3. FOG SEAL COAT SHALL BE APPLIED TO ALL HMA SURFACES EXCEPT TRAVELED WAY AND SHOULDERS.
4. FOR LOCATIONS AND TYPES OF DIKES, COLD PLANE, CONCRETE BARRIER, GUARD RAILING, IMPORTED BORROW, AND REMOVE CONCRETE CURB, SEE SUMMARY OF QUANTITIES SHEETS.
5. SEE CONSTRUCTION DETAILS FOR BEYOND GORE PAVING, MINOR CONCRETE EXPOSED AGGREGATE.

LEGEND:

1: 0.15' RHMA-G; 0.18' HMA -A

2: COLD PLANE AC (0.15'); 0.15' RHMA-G

3: 0.15' RHMA-G; 0.20' HMA -A; 0.45' CI 2 AB

4: 0.33' MINOR CONCRETE (Misc Const) / (EXPOSED AGGREGATE Conc)

5: 0.15' RHMA-G; 0.10' HMA -A

GORE PAVING: COLD PLANE AC (0.15'); 0.15' HMA-A

A: EXISTING 0.50' AC; 1.30' AB (CI 2)

B: EXISTING 0.25' AC; 0.65' CTB; 1.10' AS (CI 4)

C: EXISTING 0.67' PCC; 0.35' CTB; 0.48' CI 2 AB; 0.50' CI 4 AS

D: EXISTING 1.05' JPCP; 0.25' HMA-A; 0.75' CI 2 AB

E: EXISTING 0.25' AC; 0.50' CTB; 1.20' CI 4 AS

F: EXISTING 0.15' AC

G: EXISTING 0.15' AC; 0.25' AC BASE; 0.50' CTB; 1.45' CI 4 AS

H: EXISTING 0.15' AC; 0.20' AC BASE; 0.50' CTB; 1.20' CI 4 AS

I: EXISTING 0.33' AC; 0.50' CTB; 0.95' CI 4 AS

J: EXISTING 0.33' AC; 1.30' CI 2 AB

K: EXISTING 0.30' AC; 0.45' CI 2 AB

PAVEMENT CLIMATE REGION

SOUTH COAST

DESIGN DESIGNATION (ROUTE 8 - PM T0.5/R0.7)

2014 ADT = 95,500 (EB)
2014 ADT = 94,300 (WB)
2030 ADT = 100,000 (EB)
2030 ADT = 95,800 (WB)

DHV = 14,600

D = 54.8%
T = 2.8%
V = N/A

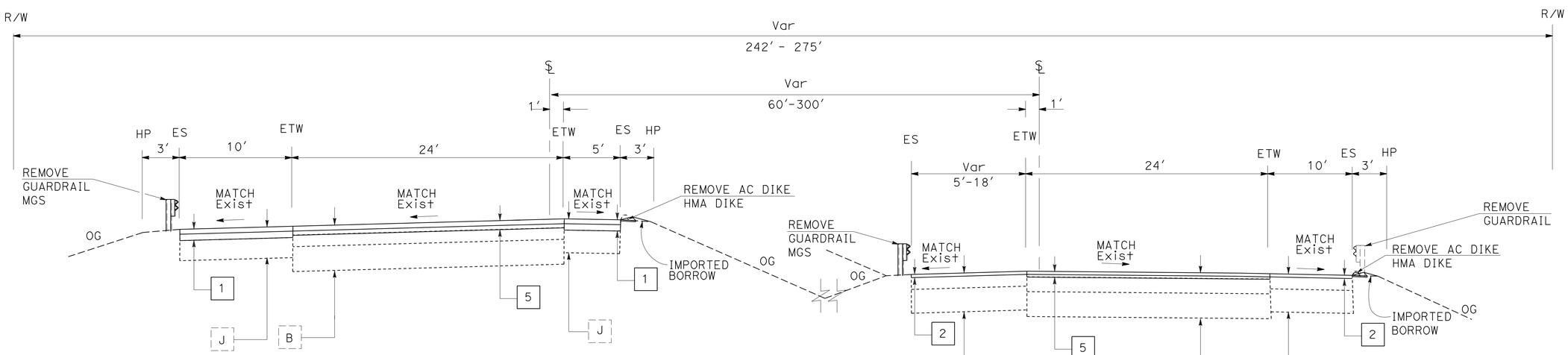

WESTBOUND
"5VW1" 46+01.98 TO 72+49
"S32" 36+79.85 TO 46+01.98

EASTBOUND
"5VE1" 75+69.94 TO 102+28
"S33" 32+80.75 TO 46+68.12

ROUTE 8

TYPICAL CROSS SECTIONS

NO SCALE

X-1

STATE OF CALIFORNIA - DEPARTMENT OF TRANSPORTATION
Caltrans PROJECT DEVELOPMENT

FUNCTIONAL SUPERVISOR: KAZIM MAMDANI
CALCULATED-DESIGNED BY: ARY JAFF
CHECKED BY: SOLOMON TADESSE
REVISED BY / DATE REVISED

LAST REVISION 06-17-16 | DATE PLOTTED => 04-OCT-2016 | TIME PLOTTED => 11:28

Dist	COUNTY	ROUTE	POST MILES TOTAL PROJECT	SHEET No.	TOTAL SHEETS
11	SD	8	T0.5/R0.7	3	162

REGISTERED CIVIL ENGINEER 06-15-16 DATE

08-22-16
PLANS APPROVAL DATE

REGISTERED PROFESSIONAL ENGINEER SOLOMON TADESSE No. C62773 Exp. 06-30-18 CIVIL STATE OF CALIFORNIA

THE STATE OF CALIFORNIA OR ITS OFFICERS OR AGENTS SHALL NOT BE RESPONSIBLE FOR THE ACCURACY OR COMPLETENESS OF SCANNED COPIES OF THIS PLAN SHEET.

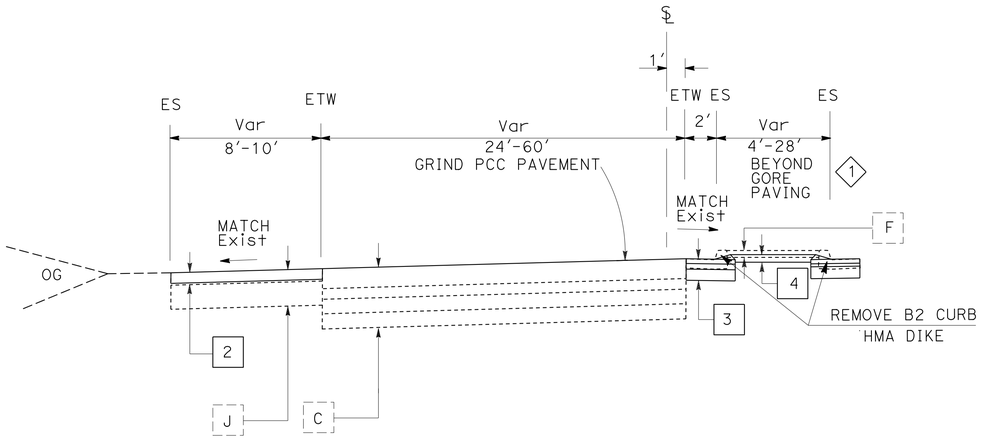

WESTBOUND
"W" 126+44 TO 132+53.00

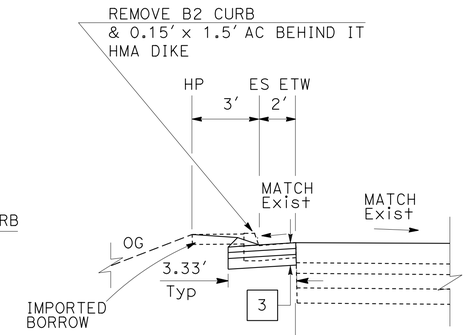

"5VE1" 151+55 TO 161+80

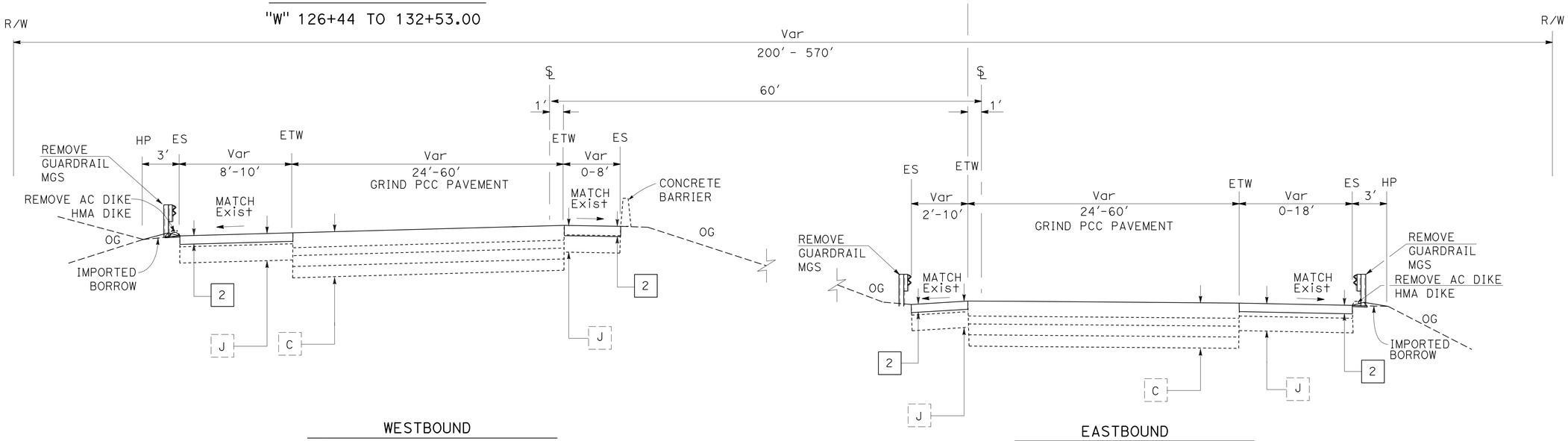

WESTBOUND
"W" 121+82.13 TO 132+53.00
"5VW1" 75+35 TO 121+82.13

EASTBOUND
"5VE1" 105+42 TO 161+80

ROUTE 8

TYPICAL CROSS SECTIONS

NO SCALE

X-2

STATE OF CALIFORNIA - DEPARTMENT OF TRANSPORTATION
Caltrans PROJECT DEVELOPMENT

FUNCTIONAL SUPERVISOR: KAZIM MAMDANI
CALCULATED-DESIGNED BY: ARY JAFF
CHECKED BY: SOLOMON TADESSE
REVISED BY
DATE REVISED

LAST REVISION 06-17-16
DATE PLOTTED => 04-OCT-2016
TIME PLOTTED => 11:28

Dist	COUNTY	ROUTE	POST MILES TOTAL PROJECT	SHEET No.	TOTAL SHEETS
11	SD	8	T0.5/R0.7	4	162

REGISTERED CIVIL ENGINEER 06-15-16 DATE

08-22-16
PLANS APPROVAL DATE

REGISTERED PROFESSIONAL ENGINEER
SOLOMON TADESSE
No. C62773
Exp. 06-30-18
CIVIL
STATE OF CALIFORNIA

THE STATE OF CALIFORNIA OR ITS OFFICERS OR AGENTS SHALL NOT BE RESPONSIBLE FOR THE ACCURACY OR COMPLETENESS OF SCANNED COPIES OF THIS PLAN SHEET.

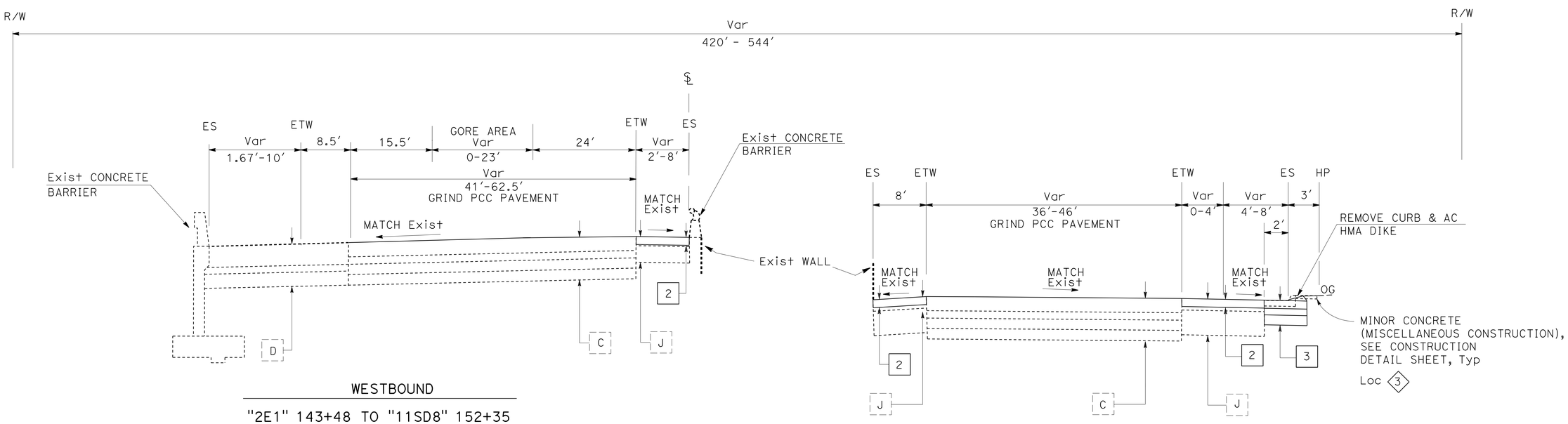

ROUTE 8

TYPICAL CROSS SECTIONS

NO SCALE

X-3

REVISED BY | DATE REVISED
ARY JAFF | SOLOMON TADESSE
CALCULATED-DESIGNED BY | CHECKED BY
FUNCTIONAL SUPERVISOR
KAZIM MAMDANI

STATE OF CALIFORNIA - DEPARTMENT OF TRANSPORTATION
Caltrans PROJECT DEVELOPMENT

LAST REVISION 06-17-16 | DATE PLOTTED => 04-OCT-2016 | TIME PLOTTED => 11:28

Dist	COUNTY	ROUTE	POST MILES TOTAL PROJECT	SHEET No.	TOTAL SHEETS
11	SD	8	T0.5/R0.7	5	162

REGISTERED CIVIL ENGINEER 06-15-16 DATE

08-22-16
PLANS APPROVAL DATE

REGISTERED PROFESSIONAL ENGINEER SOLOMON TADESSE No. C62773 Exp. 06-30-18 CIVIL STATE OF CALIFORNIA

THE STATE OF CALIFORNIA OR ITS OFFICERS OR AGENTS SHALL NOT BE RESPONSIBLE FOR THE ACCURACY OR COMPLETENESS OF SCANNED COPIES OF THIS PLAN SHEET.

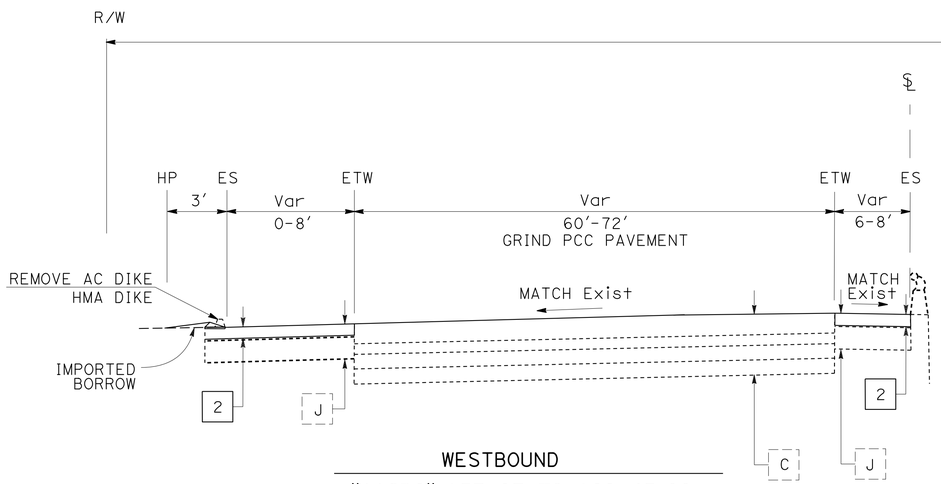

WESTBOUND

"11SD8" 157+07 TO 169+45.00

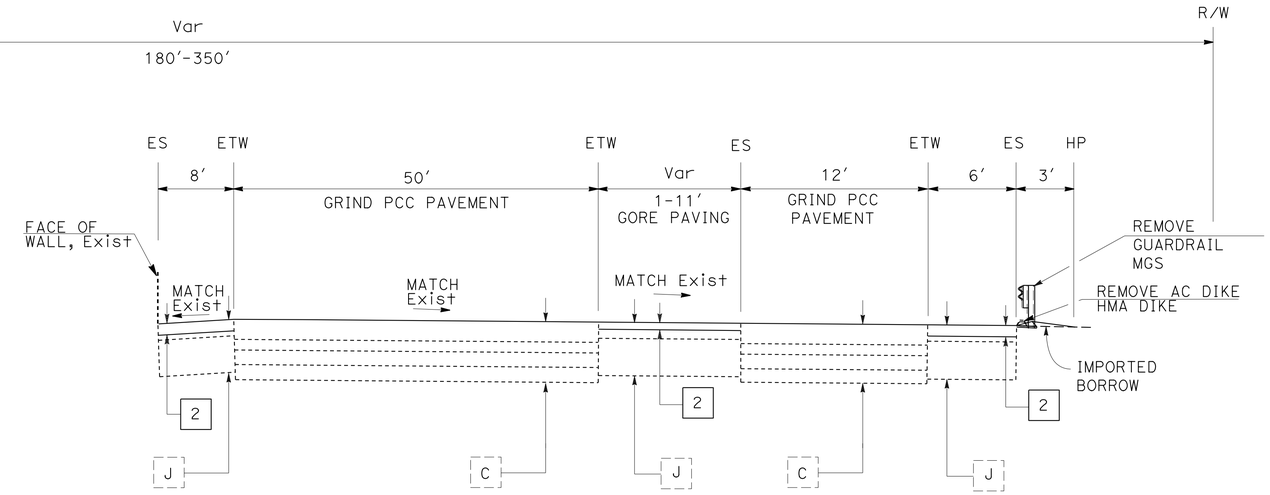

EASTBOUND

"11SD8" 158+91 TO 169+45

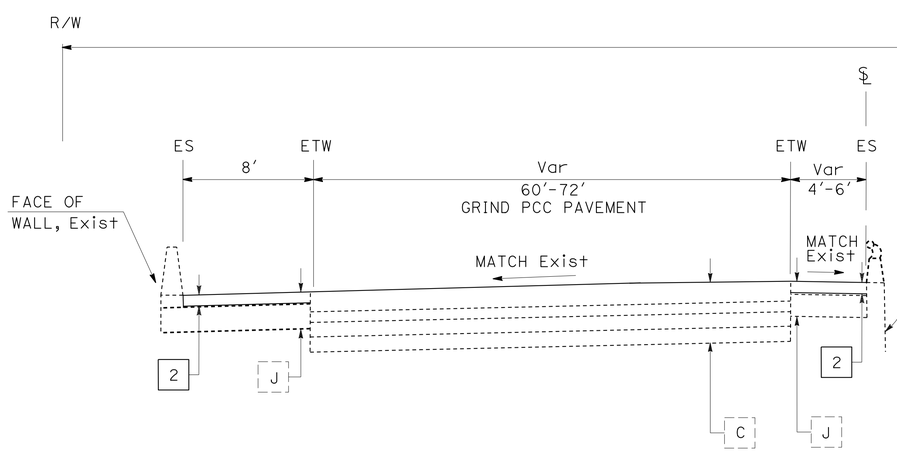

WESTBOUND

"11SD8" 154+00 TO 157+07

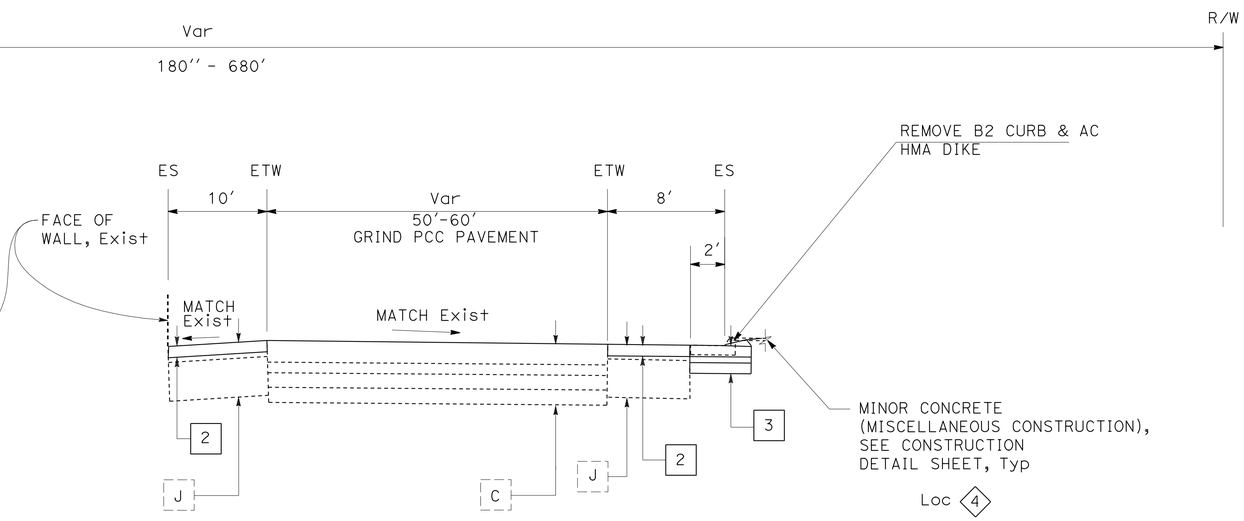

EASTBOUND

"11SD8" 153+90 TO 158+91

ROUTE 8

TYPICAL CROSS SECTIONS

NO SCALE

X-4

STATE OF CALIFORNIA - DEPARTMENT OF TRANSPORTATION
Caltrans PROJECT DEVELOPMENT

FUNCTIONAL SUPERVISOR: KAZIM MAMDANI
CALCULATED-DESIGNED BY: ARY JAFF
CHECKED BY: SOLOMON TADESSE
REVISED BY
DATE REVISED

LAST REVISION 06-17-16
DATE PLOTTED => 04-OCT-2016
TIME PLOTTED => 11:28

Dist	COUNTY	ROUTE	POST MILES TOTAL PROJECT	SHEET No.	TOTAL SHEETS
11	SD	8	T0.5/R0.7	6	162

REGISTERED CIVIL ENGINEER 06-15-16 DATE

08-22-16
PLANS APPROVAL DATE

REGISTERED PROFESSIONAL ENGINEER SOLOMON TADESSE No. C62773 Exp. 06-30-18 CIVIL STATE OF CALIFORNIA

THE STATE OF CALIFORNIA OR ITS OFFICERS OR AGENTS SHALL NOT BE RESPONSIBLE FOR THE ACCURACY OR COMPLETENESS OF SCANNED COPIES OF THIS PLAN SHEET.

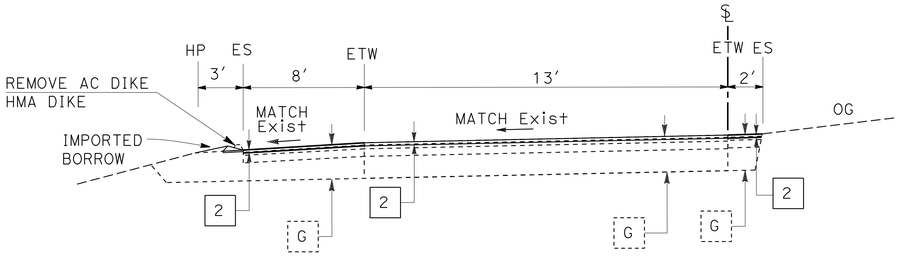

"S2" 57+50 TO 59+73

WB ROUTE 8/SB MORENA TO SB 5 LOOP ON-RAMP

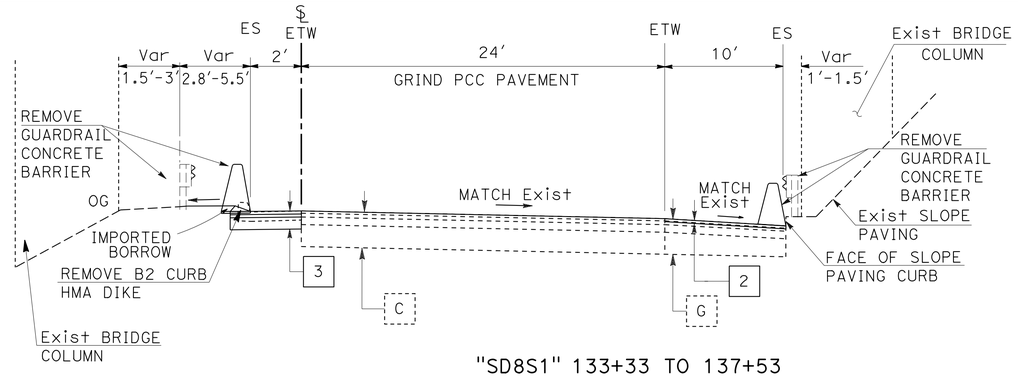

"SD8S1" 133+33 TO 137+53

EB ROUTE 8 CONNECTOR TO SB ROUTE 5

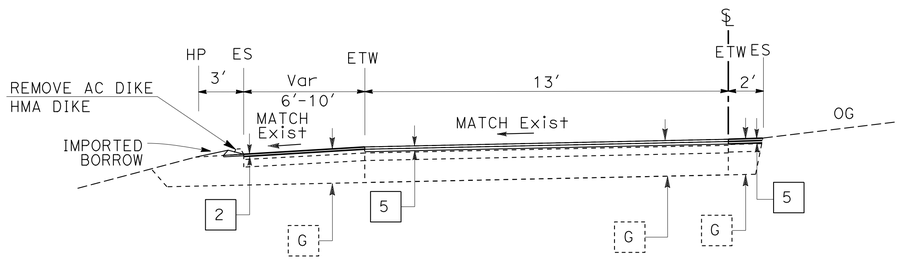

"S2" 49+70 TO 57+50

WB ROUTE 8/SB MORENA TO SB 5 LOOP ON-RAMP

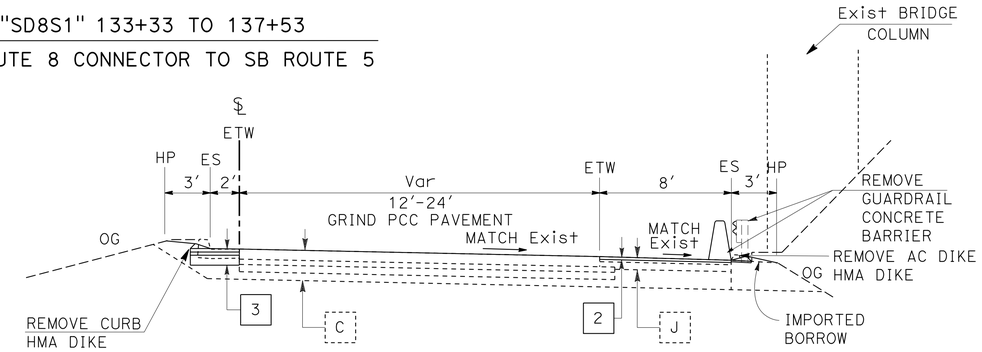

"SD8S1" 125+36 TO 133+33

EB ROUTE 8 CONNECTOR TO SB ROUTE 5

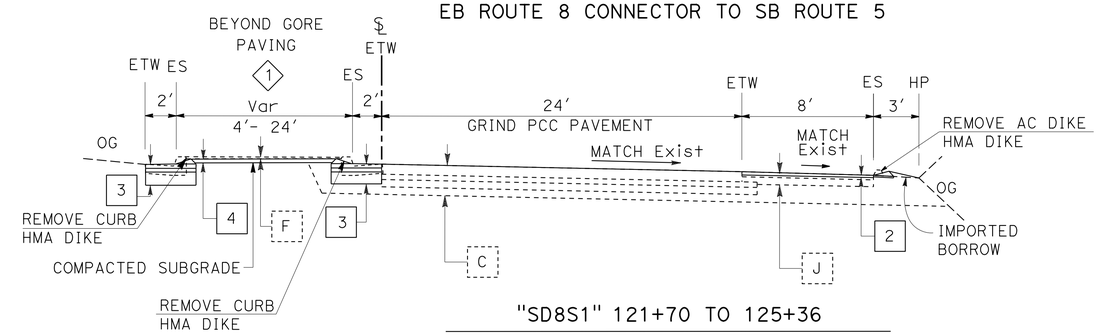

"SD8S1" 121+70 TO 125+36

EB ROUTE 8 CONNECTOR TO SB ROUTE 5

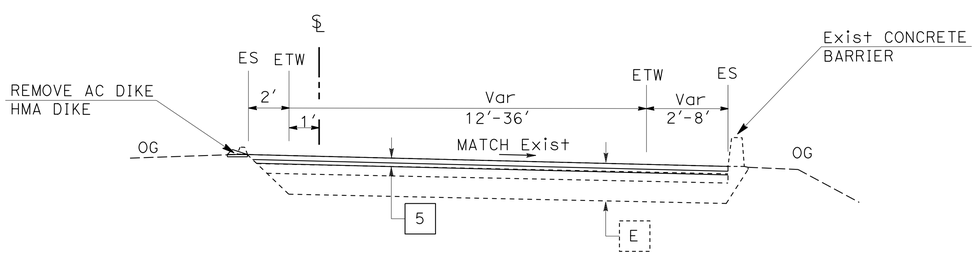

"M1AB1" 79+90 TO 90+32.67

MIDWAY DRIVE TO EB ROUTE 8

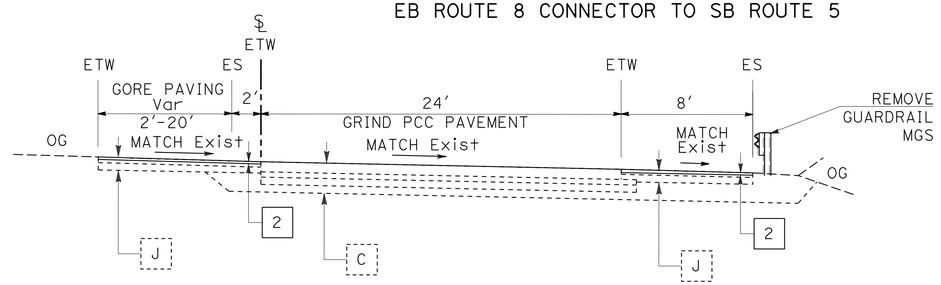

"SD8S1" 119+09.51 TO 121+70

EB ROUTE 8 CONNECTOR TO SB ROUTE 5

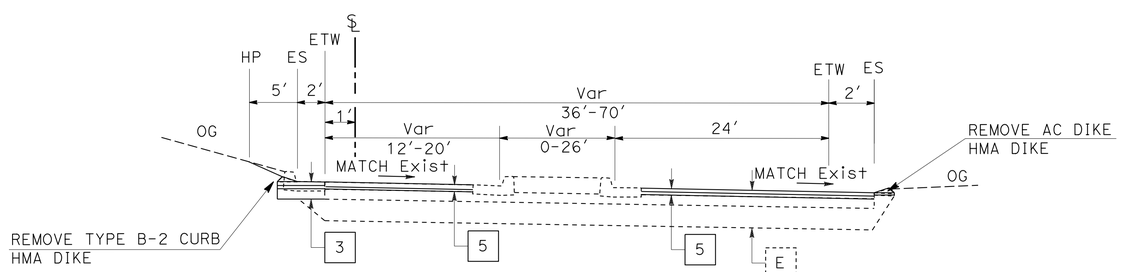

"M1AAB1" 77+61.50 TO 79+90

MIDWAY DRIVE TO EB ROUTE 8

TYPICAL CROSS SECTIONS

NO SCALE

X-5

STATE OF CALIFORNIA - DEPARTMENT OF TRANSPORTATION
Caltrans PROJECT DEVELOPMENT

FUNCTIONAL SUPERVISOR: KAZIM MAMDANI
CALCULATED-DESIGNED BY: ARY JAFF
CHECKED BY: SOLOMON TADESSE
REVISED BY / DATE REVISED

LAST REVISION 06-17-16 | DATE PLOTTED => 04-OCT-2016 | TIME PLOTTED => 11:28

Dist	COUNTY	ROUTE	POST MILES TOTAL PROJECT	SHEET No.	TOTAL SHEETS
11	SD	8	T0.5/R0.7	7	162

REGISTERED CIVIL ENGINEER 06-15-16 DATE

08-22-16
PLANS APPROVAL DATE

REGISTERED PROFESSIONAL ENGINEER SOLOMON TADESSE No. C62773 Exp. 06-30-18 CIVIL STATE OF CALIFORNIA

THE STATE OF CALIFORNIA OR ITS OFFICERS OR AGENTS SHALL NOT BE RESPONSIBLE FOR THE ACCURACY OR COMPLETENESS OF SCANNED COPIES OF THIS PLAN SHEET.

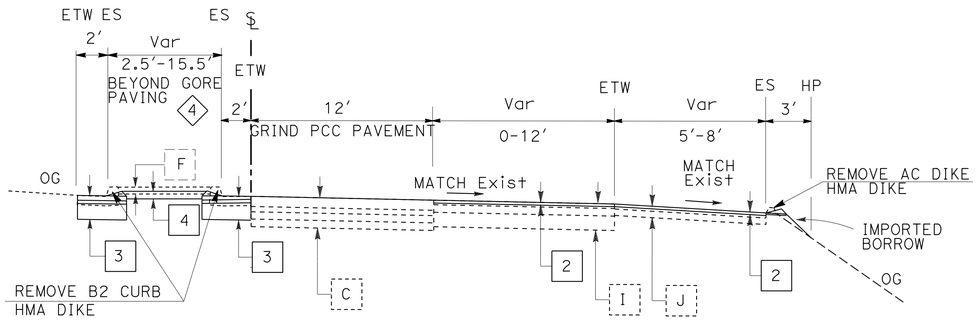

"S4_A" 150+50 TO 155+60

NB ROUTE 5 CONNECTOR TO EB ROUTE 8

"S4_A" 147+66 TO 149+00
"S4_A" 150+50 TO 151+20
"S4_A" 151+20 TO 155+62

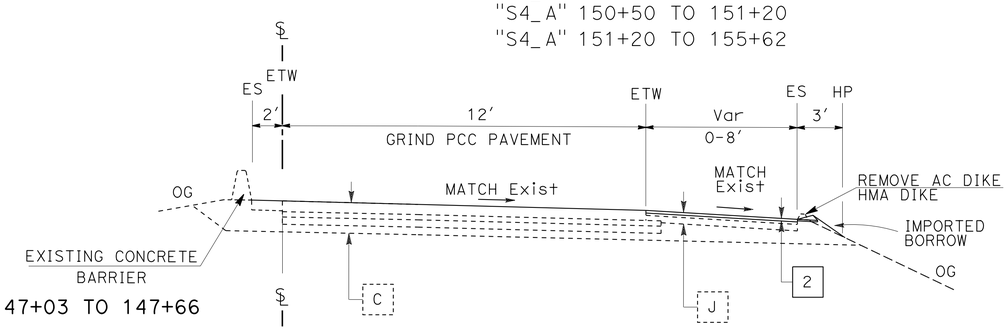

"S4_A" 147+03 TO 147+66

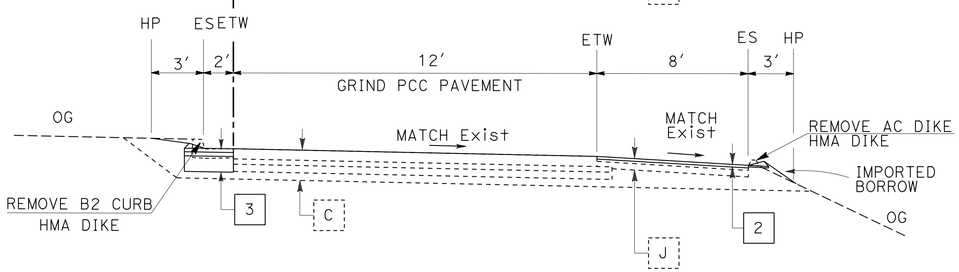

"S4_A" 140+08 TO 147+03

NB ROUTE 5 CONNECTOR TO EB ROUTE 8

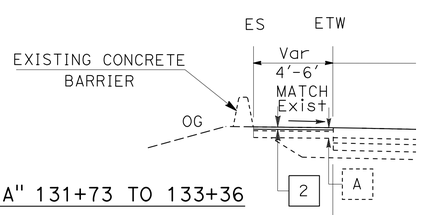

"S4_A" 131+73 TO 133+36

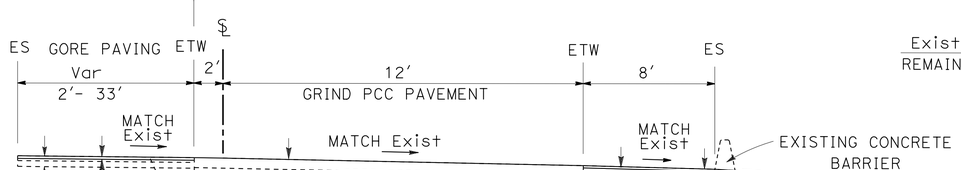

"S4_A" 130+36.34 TO 133+36
"S4" 130+77 TO 133+68.23

NB ROUTE 5 CONNECTOR TO EB ROUTE 8

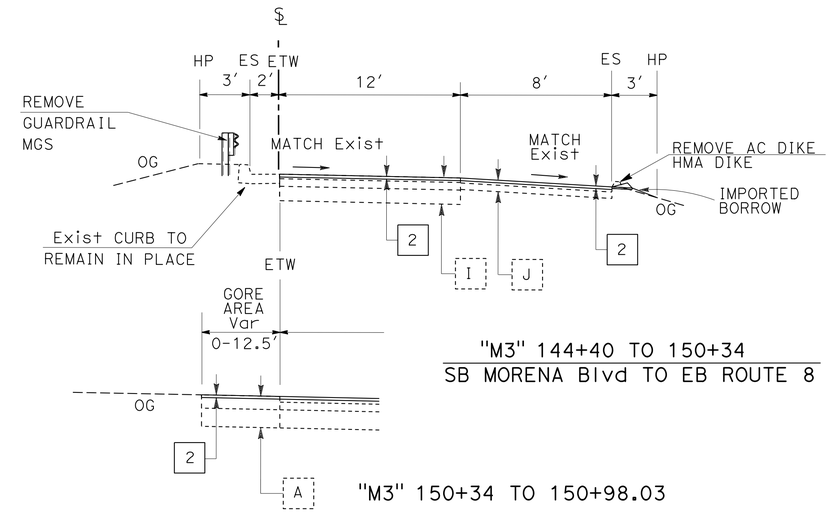

"M3" 144+40 TO 150+34

SB MORENA Blvd TO EB ROUTE 8

"M3" 150+34 TO 150+98.03

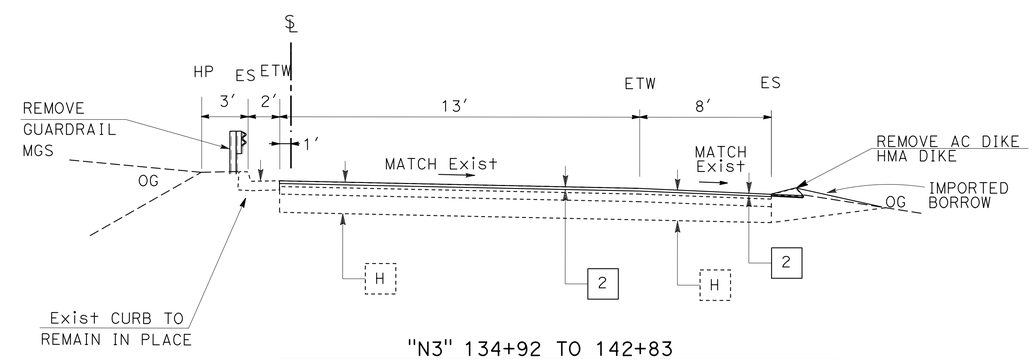

"N3" 134+92 TO 142+83

CAMINO DEL RIO W TO NB ROUTE 5 LOOP ON-RAMP

TYPICAL CROSS SECTIONS

NO SCALE

X-6

STATE OF CALIFORNIA - DEPARTMENT OF TRANSPORTATION
Caltrans® PROJECT DEVELOPMENT

FUNCTIONAL SUPERVISOR: KAZIM MAMDANI
CALCULATED-DESIGNED BY: ARY JAFF
CHECKED BY: SOLOMON TADESSE
REVISED BY
DATE REVISED

LAST REVISION 06-20-16
DATE PLOTTED => 04-OCT-2016
TIME PLOTTED => 11:28

Dist	COUNTY	ROUTE	POST MILES TOTAL PROJECT	SHEET No.	TOTAL SHEETS
11	SD	8	T0.5/R0.7	8	162

REGISTERED CIVIL ENGINEER 06-15-16 DATE

08-22-16
PLANS APPROVAL DATE

REGISTERED PROFESSIONAL ENGINEER SOLOMON TADESSE No. C62773 Exp. 06-30-18 CIVIL STATE OF CALIFORNIA

THE STATE OF CALIFORNIA OR ITS OFFICERS OR AGENTS SHALL NOT BE RESPONSIBLE FOR THE ACCURACY OR COMPLETENESS OF SCANNED COPIES OF THIS PLAN SHEET.

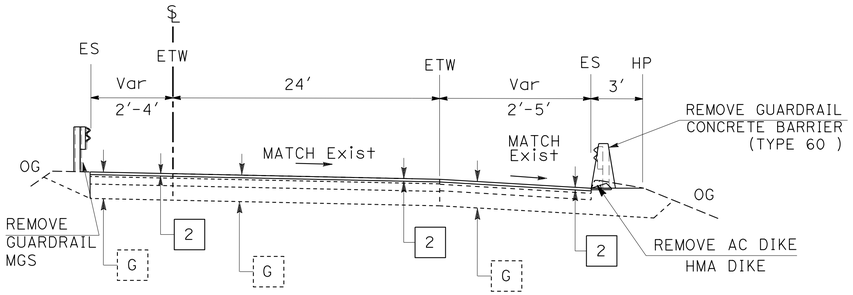

"M5" 63+43.32 TO 73+83.52

SB MIDWAY DR TO EB ROUTE 8 LOOP ON-RAMP

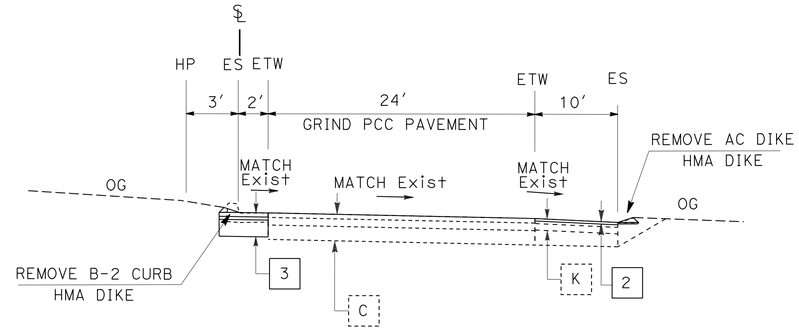

"E-4" 260+18 TO 269+17

NB CAMINO DEL RIO W TO EB ROUTE 8

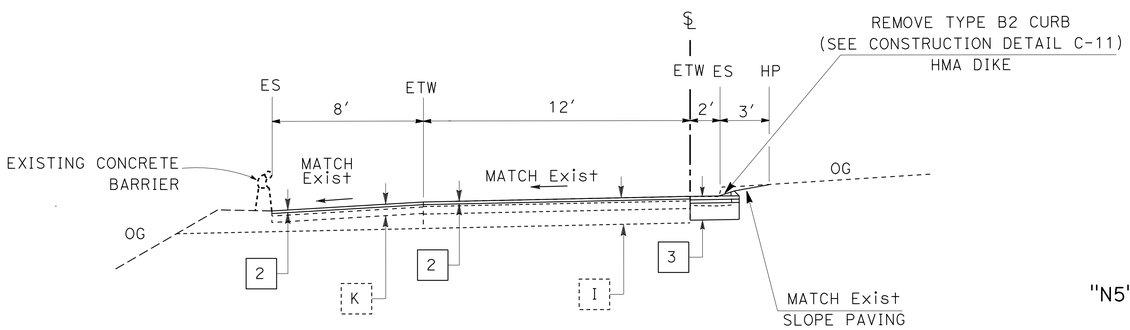

"M1" 155+09 TO 166+96

WB ROUTE 8 TO NB MORENA Blvd

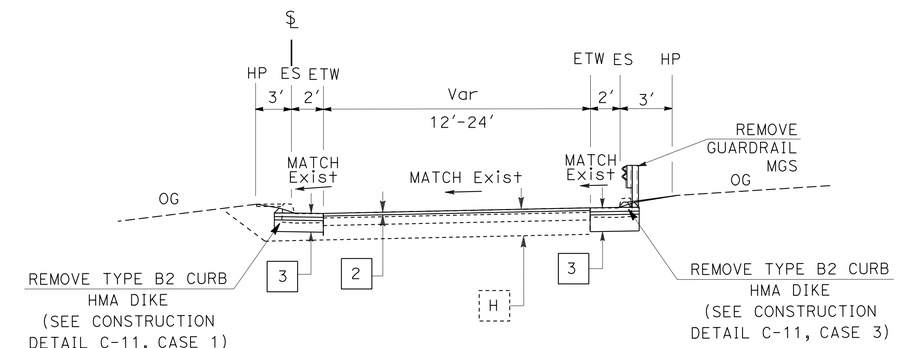

"N5" 136+06 TO 142+45

"N5" 135+64 TO 136+08 (SEE C-15 SHEET FOR DETAIL)
"N5" 141+10 TO 143+69

"N5" 135+50 TO 143+69

SB ROUTE 5 TO CAMINO DEL RIO W

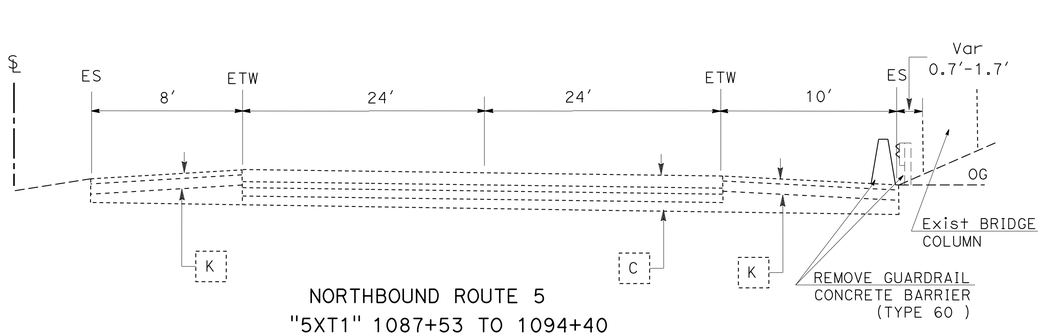

NORTHBOUND ROUTE 5
"5XT1" 1087+53 TO 1094+40

CAMINO DEL RIO W TO NB ROUTE 5

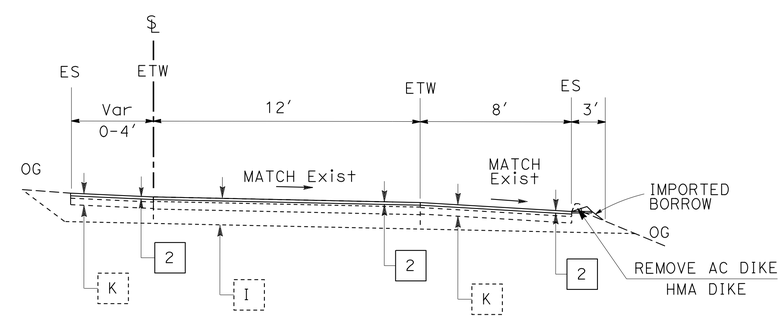

"M6" 154+53 TO 162+10.87

NB ROUTE 5 TO NB MORENA Blvd

TYPICAL CROSS SECTIONS

NO SCALE

X-7

STATE OF CALIFORNIA - DEPARTMENT OF TRANSPORTATION
Caltrans PROJECT DEVELOPMENT

FUNCTIONAL SUPERVISOR: KAZIM MAMDANI
CALCULATED-DESIGNED BY: ARY JAFF
CHECKED BY: SOLOMON TADESSE
REVISED BY
DATE REVISED

LAST REVISION 06-20-16 | DATE PLOTTED => 04-OCT-2016 | TIME PLOTTED => 11:28

Dist	COUNTY	ROUTE	POST MILES TOTAL PROJECT	SHEET No.	TOTAL SHEETS
11	SD	8	T0.5/R0.7	9	162

REGISTERED CIVIL ENGINEER 06-15-16 DATE

08-22-16
PLANS APPROVAL DATE

REGISTERED PROFESSIONAL ENGINEER SOLOMON TADESSE No. C62773 Exp. 06-30-18 CIVIL STATE OF CALIFORNIA

THE STATE OF CALIFORNIA OR ITS OFFICERS OR AGENTS SHALL NOT BE RESPONSIBLE FOR THE ACCURACY OR COMPLETENESS OF SCANNED COPIES OF THIS PLAN SHEET.

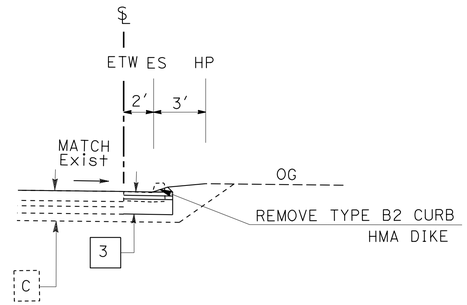

"5VS3" 137+50 TO 145+40

NB ROUTE 5 CONNECTOR TO WB ROUTE 8

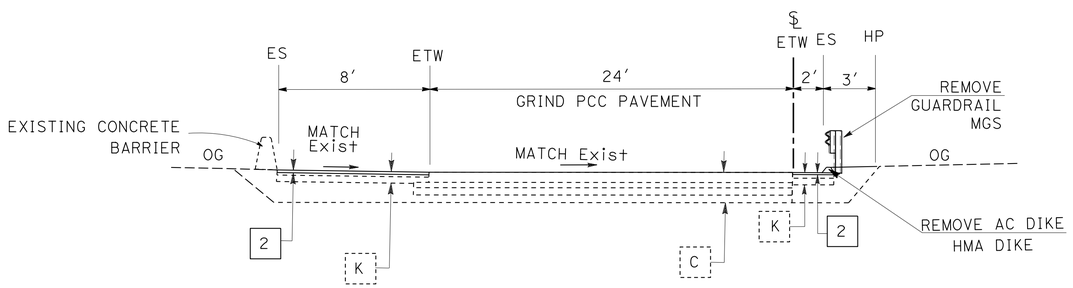

"5VS3" 135+75 TO 137+50

NB ROUTE 5 CONNECTOR TO WB ROUTE 8

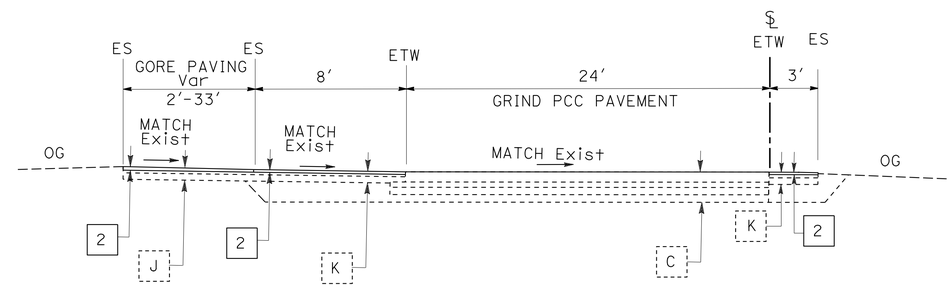

"5VS3" 145+40 TO 149+93

NB ROUTE 5 CONNECTOR TO WB ROUTE 8

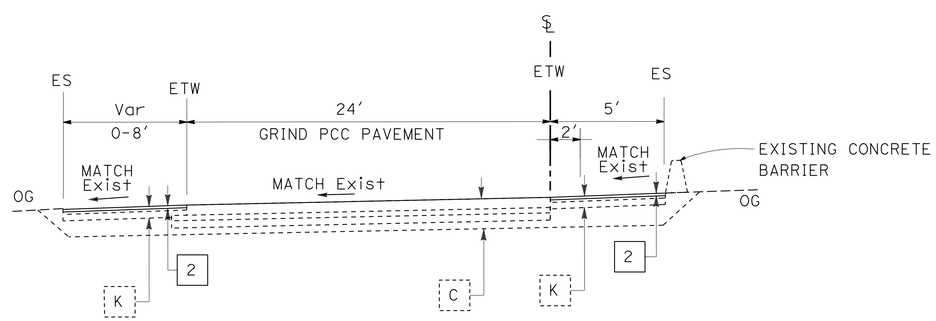

"5VS3" 123+00 TO 133+00

NB ROUTE 5 CONNECTOR TO WB ROUTE 8

TYPICAL CROSS SECTIONS

NO SCALE

X-8

REVISED BY	DATE REVISED

CALCULATED-DESIGNED BY	CHECKED BY
ARY JAFF	SOLOMON TADESSE

FUNCTIONAL SUPERVISOR: KAZIM MAMDANI

STATE OF CALIFORNIA - DEPARTMENT OF TRANSPORTATION

Caltrans PROJECT DEVELOPMENT

LAST REVISION 06-20-16 | DATE PLOTTED => 04-OCT-2016 | TIME PLOTTED => 11:28

Dist	COUNTY	ROUTE	POST MILES TOTAL PROJECT	SHEET No.	TOTAL SHEETS
11	SD	8	T0.5/R0.7	10	162

PROFESSIONAL LAND SURVEYOR DATE 06-15-16

PLANS APPROVAL DATE 08-22-16

PROFESSIONAL LAND SURVEYOR MARK D. PHELAN L.S.7111 EXP:12-31-16 STATE OF CALIFORNIA

THE STATE OF CALIFORNIA OR ITS OFFICERS OR AGENTS SHALL NOT BE RESPONSIBLE FOR THE ACCURACY OR COMPLETENESS OF SCANNED COPIES OF THIS PLAN SHEET.

NOTES:

1. FOR COMPLETE PROJECT CONTROL DATA, SEE THE SURVEY RECORDS ON FILE IN THE SURVEY DEPARTMENT AT THE DISTRICT OFFICE.
2. **BASIS OF BEARINGS**

   FOR THIS PROJECT IS THE CALIFORNIA COORDINATE SYSTEM OF 1983 (2007 Epoch) ZONE 6. PROJECT CONTROL STATIONS WERE ESTABLISHED ACCORDING TO CRITERIA SET FORTH IN THE FEDERAL GEODETIC CONTROL SUBCOMMITTEE'S "GEOMETRIC GEODETIC ACCURACY STANDARDS AND SPECIFICATIONS FOR USING GPS RELATIVE POSITIONING TECHNIQUES" REPRINTED AUGUST 1, 1989.
3. **BASIS OF ELEVATIONS**

   FOR THIS PROJECT IS THE NORTH AMERICAN VERTICAL DATUM OF 1988 (NAVD88). ELEVATIONS WERE ESTABLISHED BY TRIGONOMETRIC LEVELING AND GPS STATIC SURVEY AND MEET CALTRANS 3RD ORDER ACCURACY REQUIREMENTS.
4. IN THE EVENT GPS MACHINE CONTROL/GUIDANCE IS USED FOR THIS PROJECT, THE CONTRACTOR SHALL CONTACT OR MEET WITH DISTRICT 11'S LAND SURVEY DIVISION TO OBTAIN THE CONTROL NECESSARY TO ESTABLISH A PROJECT CALIBRATION COMPATIBLE FOR ALL USERS.

ABBREVIATIONS:

CADT CALIFORNIA DEPARTMENT OF TRANSPORTATION

LEGEND:

1 1ST ORDER STATION

2 2ND ORDER STATION

3 3RD ORDER STATION

CONTROL FOR DESIGN AND CONSTRUCTION

DESIGNATION	ORDER	NORTHING	EASTING	ELEVATION	DESCRIPTION
5-19.82	1ST	1856900.75	6269960.73	13.16	2¼" CADT BRASS DISK IN SIDEWALK
SD 157	1ST	1859287.91	6264096.24	N/A	SAN DIEGO CITY 2¼" DISK IN CONCRETE
8-K1.93L	2ND	1856682.57	6262233.90	40.88	2¼" CADT BRASS DISK IN BRIDGE ABUTMENT
2007-120-2	3RD	1856405.58	6262702.92	9.80	CHISELED X IN CONCRETE
2013-018-501	3RD	1857636.60	6270582.05	43.89	CHISELED X IN CONCRETE
2016-018-401	3RD	1857304.86	6270280.90	18.98	CHISELED X IN TOP OF CURB
2016-018-406	3RD	1856059.90	6259043.37	34.51	PK NAIL IN ASPHALT
2016-018-407	3RD	1855741.63	6258282.51	21.85	PK NAIL IN ASPHALT

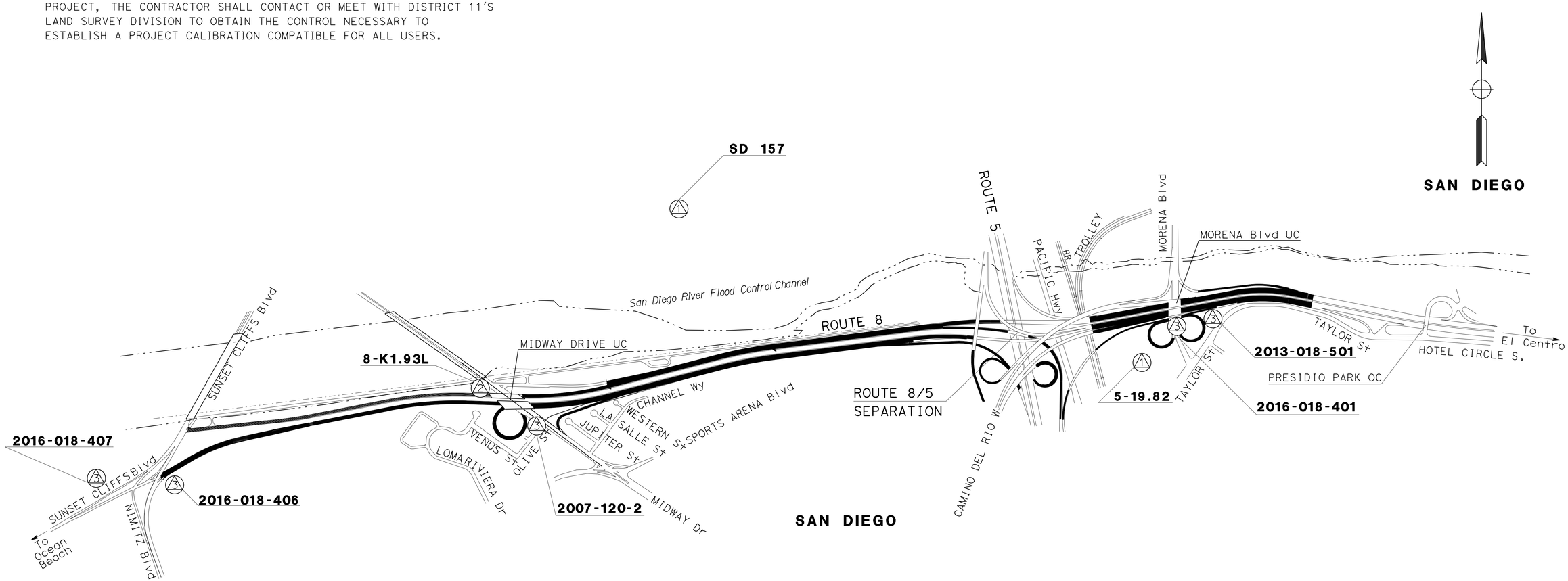

PROJECT CONTROL

PC-1

NO SCALE

APPROVED FOR PROJECT CONTROL INFORMATION ONLY

STATE OF CALIFORNIA - DEPARTMENT OF TRANSPORTATION

Caltrans

LAND SURVEYS DIVISION

FUNCTIONAL SUPERVISOR: GEORGE SCHUH

CALCULATED-DESIGNED BY: ROBERT EICHWALD

CHECKED BY: MARK PHELAN

REVISED BY

DATE REVISED

LAST REVISION 06-20-16

DATE PLOTTED => 04-OCT-2016

TIME PLOTTED => 11:28

BORDER LAST REVISED 7/2/2010

USERNAME => s127400

DGN FILE => 1112000016dc001.dgn

RELATIVE BORDER SCALE IS IN INCHES 0 1 2 3

UNIT 2786

PROJECT NUMBER & PHASE 11120000161

Dist	COUNTY	ROUTE	POST MILES TOTAL PROJECT	SHEET No.	TOTAL SHEETS
11	SD	8	T0.5/R0.7	11	162

06-15-16
REGISTERED CIVIL ENGINEER DATE

08-22-16
PLANS APPROVAL DATE

REGISTERED PROFESSIONAL ENGINEER
SOLOMON TADESSE
No. C62773
Exp. 06-30-18
CIVIL
STATE OF CALIFORNIA

THE STATE OF CALIFORNIA OR ITS OFFICERS OR AGENTS SHALL NOT BE RESPONSIBLE FOR THE ACCURACY OR COMPLETENESS OF SCANNED COPIES OF THIS PLAN SHEET.

LEGEND:

- CR CURB RAMP
- ● CURB RAMP LOCATION
- XX LOCATION NUMBER
- XX BEYOND GORE PAVING (SEE CONSTRUCTION DETAIL)
- XX REPLACE MBGR WITH CONCRETE BARRIER (SEE CONSTRUCTION DETAIL)
- XX MGS (SEE CONSTRUCTION DETAIL)
- GORE PAVING
- RUMBLE BARS
- X PAVEMENT STRUCTURAL SECTION (SEE TYPICAL CROSS SECTIONS)
- —e— —(oh)— ELECTRICAL LINE
- —s— —s— SEWER LINE
- ====== Exist IRRIGATION CONDUIT (TO BE PROTECTED IN PLACE)
- ⊡ INLET PROTECTION

ALIGNMENT / DESCRIPTION:

"5VE1"	EB ROUTE 8
"S33"	EB ROUTE 8
"5VW1"	WB ROUTE 8
"2E1"	SB ROUTE 5 TO EB ROUTE 8
"11SD8"	EB ROUTE 8
"5VS3"	NB ROUTE 5 CONNECTOR TO WB ROUTE 8
"M6"	NB ROUTE 5 TO NB MORENA LOOP ON-RAMP
"S4"	NB ROUTE 5 CONNECTOR TO EB ROUTE 8
"S4_A"	NB ROUTE 5 CONNECTOR TO EB ROUTE 8
"5XT1"	ROUTE 5 CENTERLINE
"SD8S1"	EB ROUTE 8 CONNECTOR TO SB ROUTE 5
"M5"	SB MIDWAY Dr TO EB ROUTE 8 LOOP ON-RAMP
"S32"	WB ROUTE 8 AND NIMITZ Blvd
"C5"	NIMITZ Blvd
"B5"	SUNSET CLIFFS Blvd
"S34"	EB ROUTE 8 ON-RAMP FROM NIMITZ Blvd
"M34"	MIDWAY DR
"M7"	SB MORENA Blvd TO WB ROUTE 8

ALIGNMENT / DESCRIPTION:

"E95"	WB ROUTE 8 TO CAMINO DEL RIO W
"S2"	WB ROUTE 8/SB MORENA TO SB 5 LOOP ON-RAMP
"M1"	WB ROUTE 8 TO NB MORENA Blvd
"M2"	WB ROUTE 8 OFF TO SPORTS ARENA Blvd
"M1AAB1"	MIDWAY Dr TO EB ROUT 8 ON-RAMP
"M1AB1"	MIDWAY Dr TO EB ROUT 8 ON-RAMP
"2E1"	SB ROUTE 5 TO EB ROUTE 8
"N5"	SB ROUTE 5 TO CAMINO DEL RIO W
"N3"	CAMINO DEL RIO W TO NB 5 LOOP ON-RAMP
"M3"	SB MORENA TO EB ROUTE 8 LOOP ON-RAMP
"M1"	MORENA Blvd
"5M1"	SB MORENA Blvd
"W"	WB ROUTE 8
"E-4"	CAMINO DEL RIO W TO EB ROUTE 8
"M32R1"	WEST MISSION BAY DR
"N4"	WB ROUTE 8 CONNECTOR TO NB ROUTE 5
"MT1"	MORENA Blvd TO TAYLOR ST
"T5"	TAYLOR ST
"11SD5A2"	ROUTE 5, SOUTH END

NOTE:

FOR ACCURATE RIGHT OF WAY DATA, CONTACT RIGHT OF WAY ENGINEERING AT THE DISTRICT OFFICE.

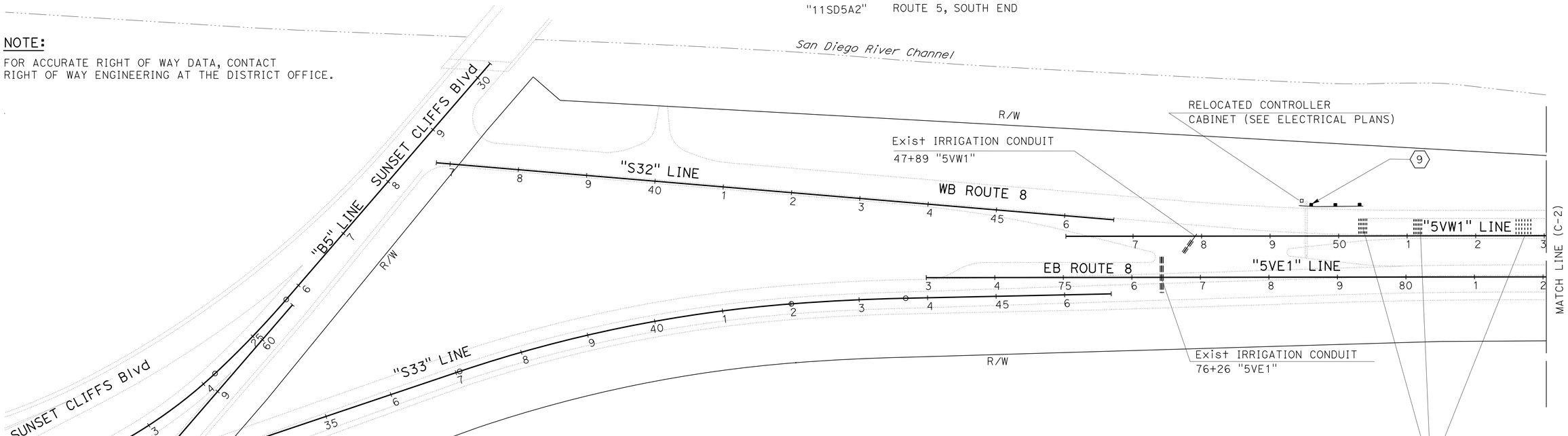

CONSTRUCTION DETAILS
CONSTRUCTION LOCATIONS KEY MAP

NO SCALE

C-1

STATE OF CALIFORNIA - DEPARTMENT OF TRANSPORTATION
Caltrans PROJECT DEVELOPMENT

FUNCTIONAL SUPERVISOR: KAZIM MAMDANI
CALCULATED-DESIGNED BY: ARY JAFF
CHECKED BY: SOLOMON TADESSE
REVISED BY
DATE REVISED

LAST REVISION 06-20-16
DATE PLOTTED => 04-OCT-2016
TIME PLOTTED => 11:28

Dist	COUNTY	ROUTE	POST MILES TOTAL PROJECT	SHEET No.	TOTAL SHEETS
11	SD	8	T0.5/R0.7	12	162

REGISTERED CIVIL ENGINEER 06-15-16 DATE

08-22-16
PLANS APPROVAL DATE

REGISTERED PROFESSIONAL ENGINEER
SOLOMON TADESSE
No. C62773
Exp. 06-30-18
CIVIL
STATE OF CALIFORNIA

THE STATE OF CALIFORNIA OR ITS OFFICERS OR AGENTS SHALL NOT BE RESPONSIBLE FOR THE ACCURACY OR COMPLETENESS OF SCANNED COPIES OF THIS PLAN SHEET.

NOTE:

FOR ACCURATE RIGHT OF WAY DATA, CONTACT RIGHT OF WAY ENGINEERING AT THE DISTRICT OFFICE.

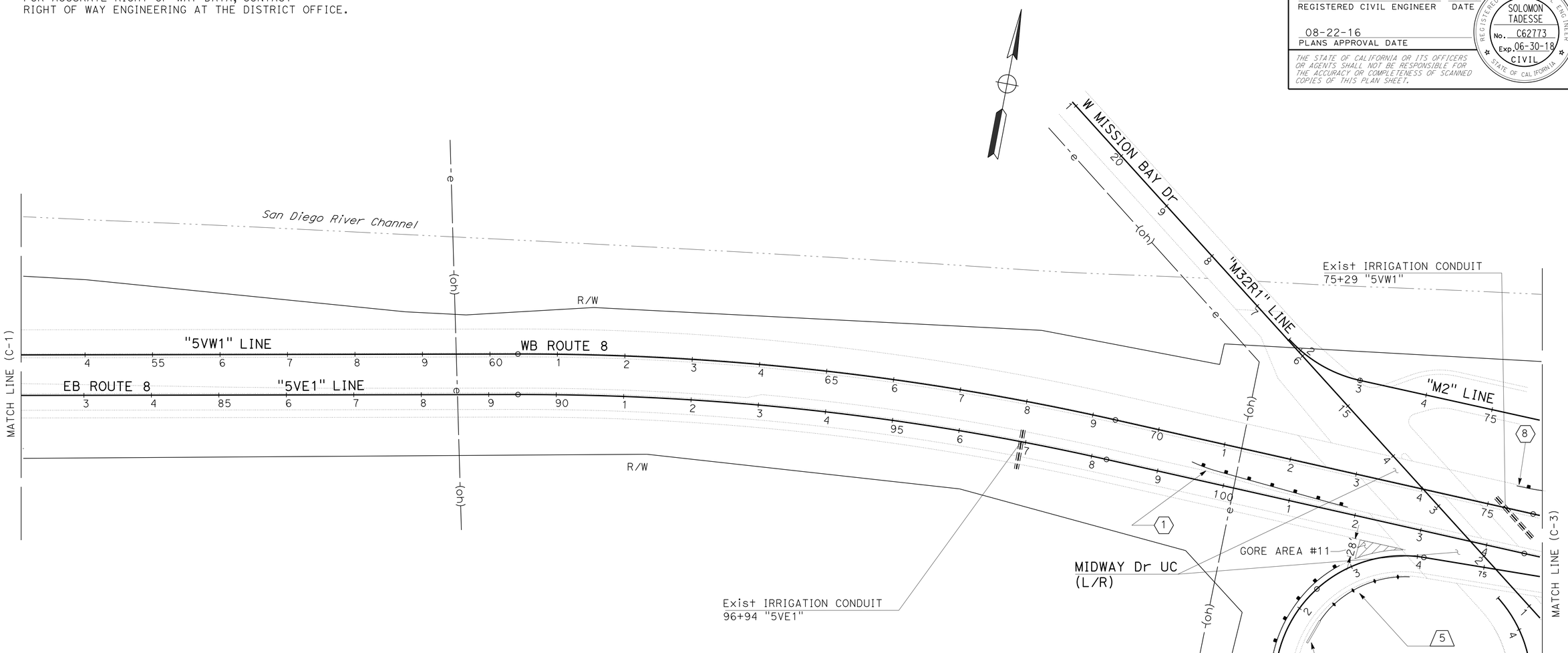

CONSTRUCTION DETAILS

CONSTRUCTION LOCATIONS KEY MAP

NO SCALE

C-2

STATE OF CALIFORNIA - DEPARTMENT OF TRANSPORTATION
Caltrans PROJECT DEVELOPMENT

FUNCTIONAL SUPERVISOR: KAZIM MAMDANI
CALCULATED-DESIGNED BY: ARY JAFF
CHECKED BY: SOLOMON TADESSE
REVISED BY
DATE REVISED

LAST REVISION 06-20-16
DATE PLOTTED => 04-OCT-2016
TIME PLOTTED => 11:28

Dist	COUNTY	ROUTE	POST MILES TOTAL PROJECT	SHEET No.	TOTAL SHEETS
11	SD	8	T0.5/R0.7	13	162

REGISTERED CIVIL ENGINEER 06-15-16 DATE

08-22-16
PLANS APPROVAL DATE

REGISTERED PROFESSIONAL ENGINEER
SOLOMON TADESSE
No. C62773
Exp. 06-30-18
CIVIL
STATE OF CALIFORNIA

THE STATE OF CALIFORNIA OR ITS OFFICERS OR AGENTS SHALL NOT BE RESPONSIBLE FOR THE ACCURACY OR COMPLETENESS OF SCANNED COPIES OF THIS PLAN SHEET.

NOTE:

FOR ACCURATE RIGHT OF WAY DATA, CONTACT RIGHT OF WAY ENGINEERING AT THE DISTRICT OFFICE.

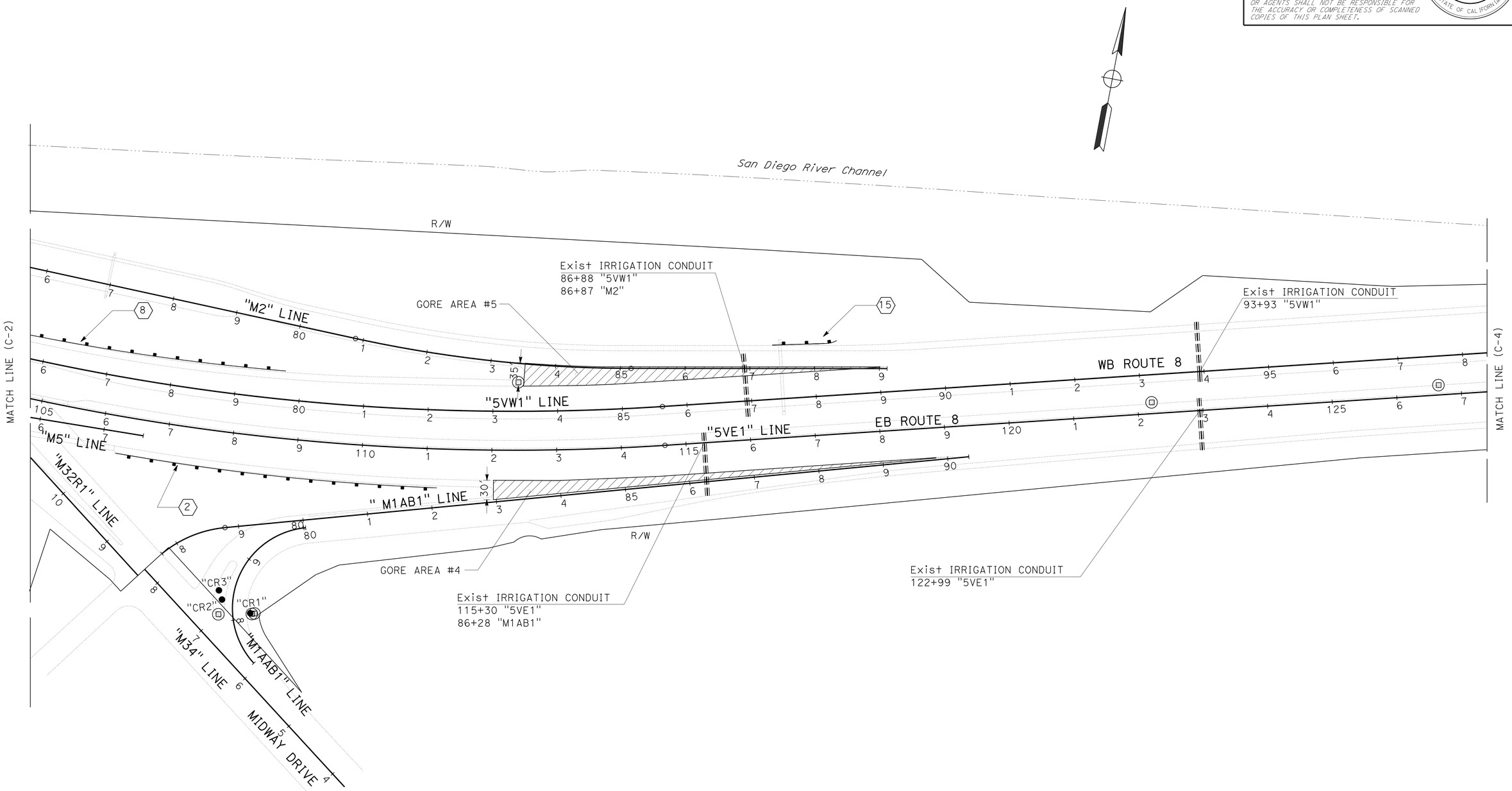

CONSTRUCTION DETAILS

CONSTRUCTION LOCATIONS KEY MAP

NO SCALE

C-3

STATE OF CALIFORNIA - DEPARTMENT OF TRANSPORTATION
Caltrans PROJECT DEVELOPMENT

FUNCTIONAL SUPERVISOR: KAZIM MAMDANI

CALCULATED-DESIGNED BY: ARY JAFF
CHECKED BY: SOLOMON TADESSE

REVISED BY
DATE REVISED

LAST REVISION 06-20-16
DATE PLOTTED => 04-OCT-2016
TIME PLOTTED => 11:28

Dist	COUNTY	ROUTE	POST MILES TOTAL PROJECT	SHEET No.	TOTAL SHEETS
11	SD	8	T0.5/R0.7	14	162

REGISTERED CIVIL ENGINEER 06-15-16 DATE

08-22-16
PLANS APPROVAL DATE

REGISTERED PROFESSIONAL ENGINEER SOLOMON TADESSE No. C62773 Exp. 06-30-18 CIVIL STATE OF CALIFORNIA

THE STATE OF CALIFORNIA OR ITS OFFICERS OR AGENTS SHALL NOT BE RESPONSIBLE FOR THE ACCURACY OR COMPLETENESS OF SCANNED COPIES OF THIS PLAN SHEET.

NOTE:

FOR ACCURATE RIGHT OF WAY DATA, CONTACT RIGHT OF WAY ENGINEERING AT THE DISTRICT OFFICE.

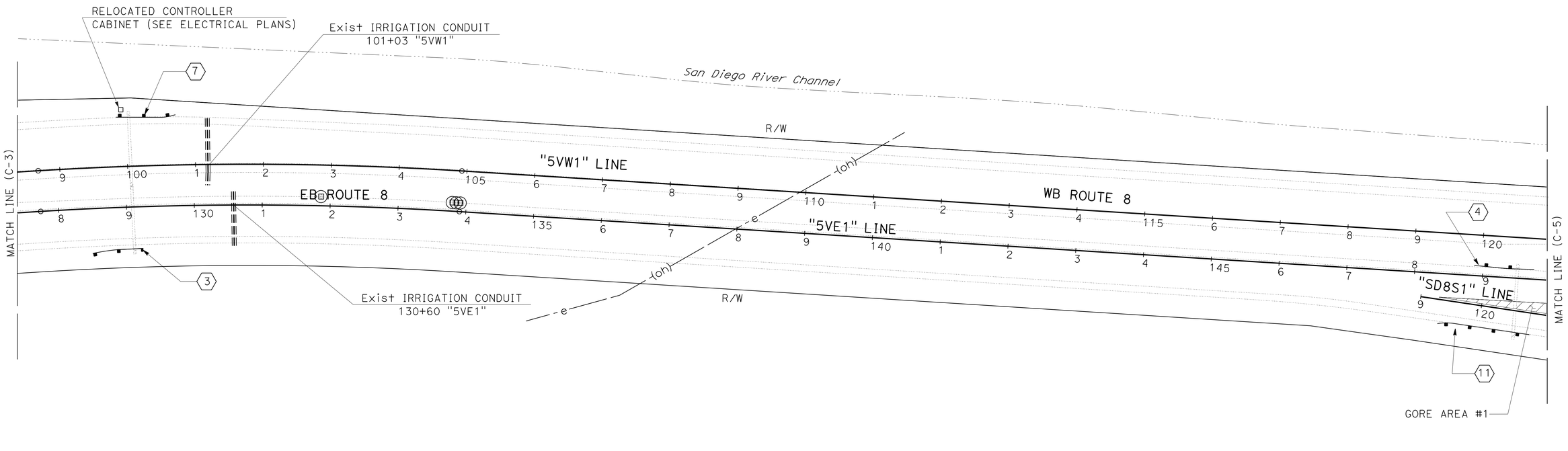

CONSTRUCTION DETAILS

CONSTRUCTION LOCATIONS KEY MAP

NO SCALE

C-4

STATE OF CALIFORNIA - DEPARTMENT OF TRANSPORTATION
Caltrans PROJECT DEVELOPMENT

FUNCTIONAL SUPERVISOR: KAZIM MAMDANI

CALCULATED-DESIGNED BY: ARY JAFF
CHECKED BY: SOLOMON TADESSE

REVISED BY
DATE REVISED

LAST REVISION 06-20-16
DATE PLOTTED => 04-OCT-2016
TIME PLOTTED => 11:28

Dist	COUNTY	ROUTE	POST MILES TOTAL PROJECT	SHEET No.	TOTAL SHEETS
11	SD	8	T0.5/R0.7	15	162

06-15-16
REGISTERED CIVIL ENGINEER DATE

08-22-16
PLANS APPROVAL DATE

REGISTERED PROFESSIONAL ENGINEER
SOLOMON TADESSE
No. C62773
Exp. 06-30-18
CIVIL
STATE OF CALIFORNIA

THE STATE OF CALIFORNIA OR ITS OFFICERS OR AGENTS SHALL NOT BE RESPONSIBLE FOR THE ACCURACY OR COMPLETENESS OF SCANNED COPIES OF THIS PLAN SHEET.

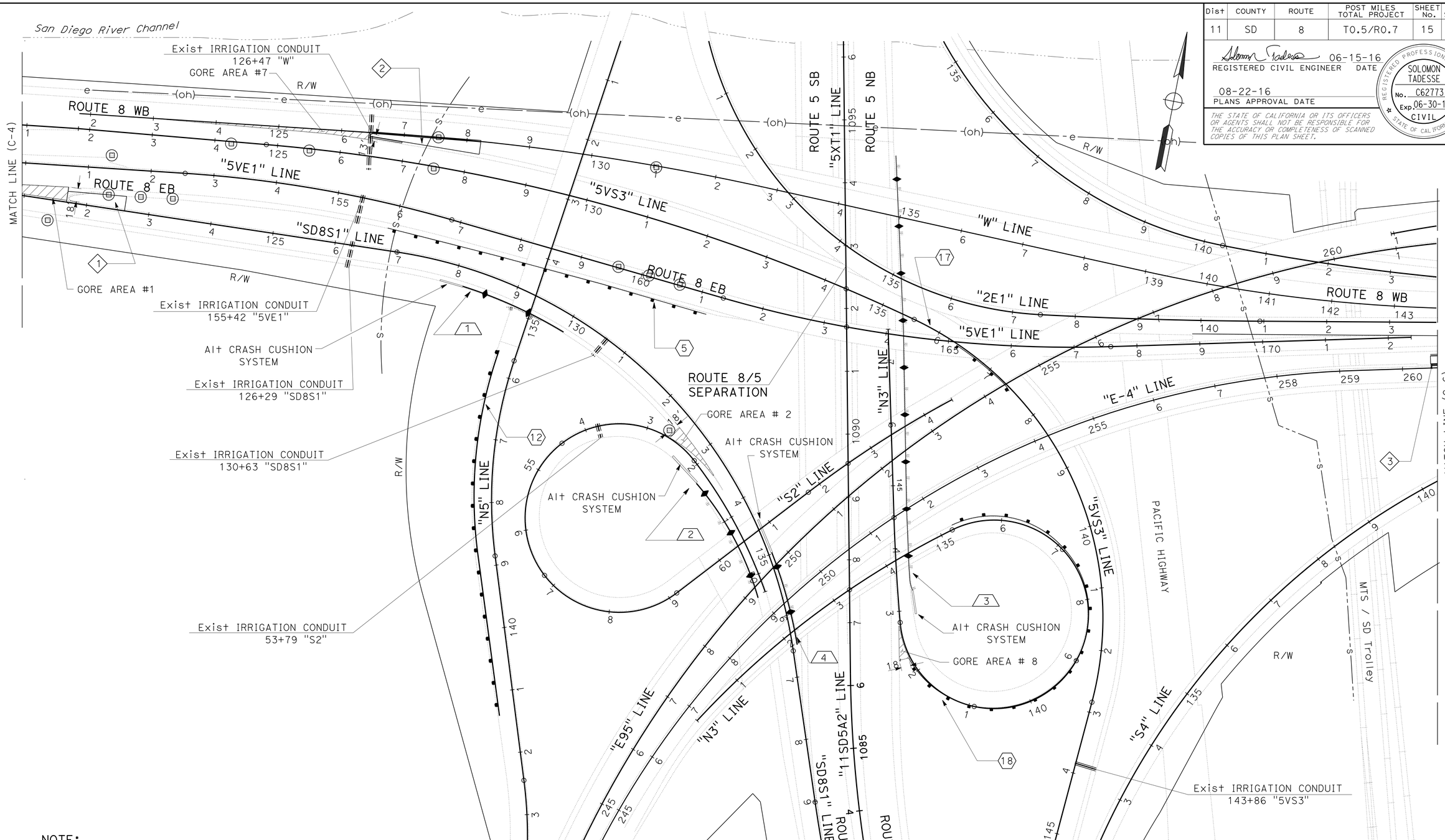

NOTE:

FOR ACCURATE RIGHT OF WAY DATA, CONTACT RIGHT OF WAY ENGINEERING AT THE DISTRICT OFFICE.

CONSTRUCTION DETAILS

CONSTRUCTION LOCATIONS KEY MAP

NO SCALE

C-5

STATE OF CALIFORNIA - DEPARTMENT OF TRANSPORTATION
Caltrans PROJECT DEVELOPMENT

FUNCTIONAL SUPERVISOR: KAZIM MAMDANI
CALCULATED-DESIGNED BY: ARY JAFF
CHECKED BY: SOLOMON TADESSE
REVISED BY / DATE REVISED

LAST REVISION 06-20-16
DATE PLOTTED => 04-OCT-2016
TIME PLOTTED => 11:29

Dist	COUNTY	ROUTE	POST MILES TOTAL PROJECT	SHEET No.	TOTAL SHEETS
11	SD	8	T0.5/R0.7	16	162

REGISTERED CIVIL ENGINEER 06-15-16 DATE

08-22-16
PLANS APPROVAL DATE

REGISTERED PROFESSIONAL ENGINEER SOLOMON TADESSE No. C62773 Exp. 06-30-18 CIVIL STATE OF CALIFORNIA

THE STATE OF CALIFORNIA OR ITS OFFICERS OR AGENTS SHALL NOT BE RESPONSIBLE FOR THE ACCURACY OR COMPLETENESS OF SCANNED COPIES OF THIS PLAN SHEET.

NOTE:

FOR ACCURATE RIGHT OF WAY DATA, CONTACT RIGHT OF WAY ENGINEERING AT THE DISTRICT OFFICE.

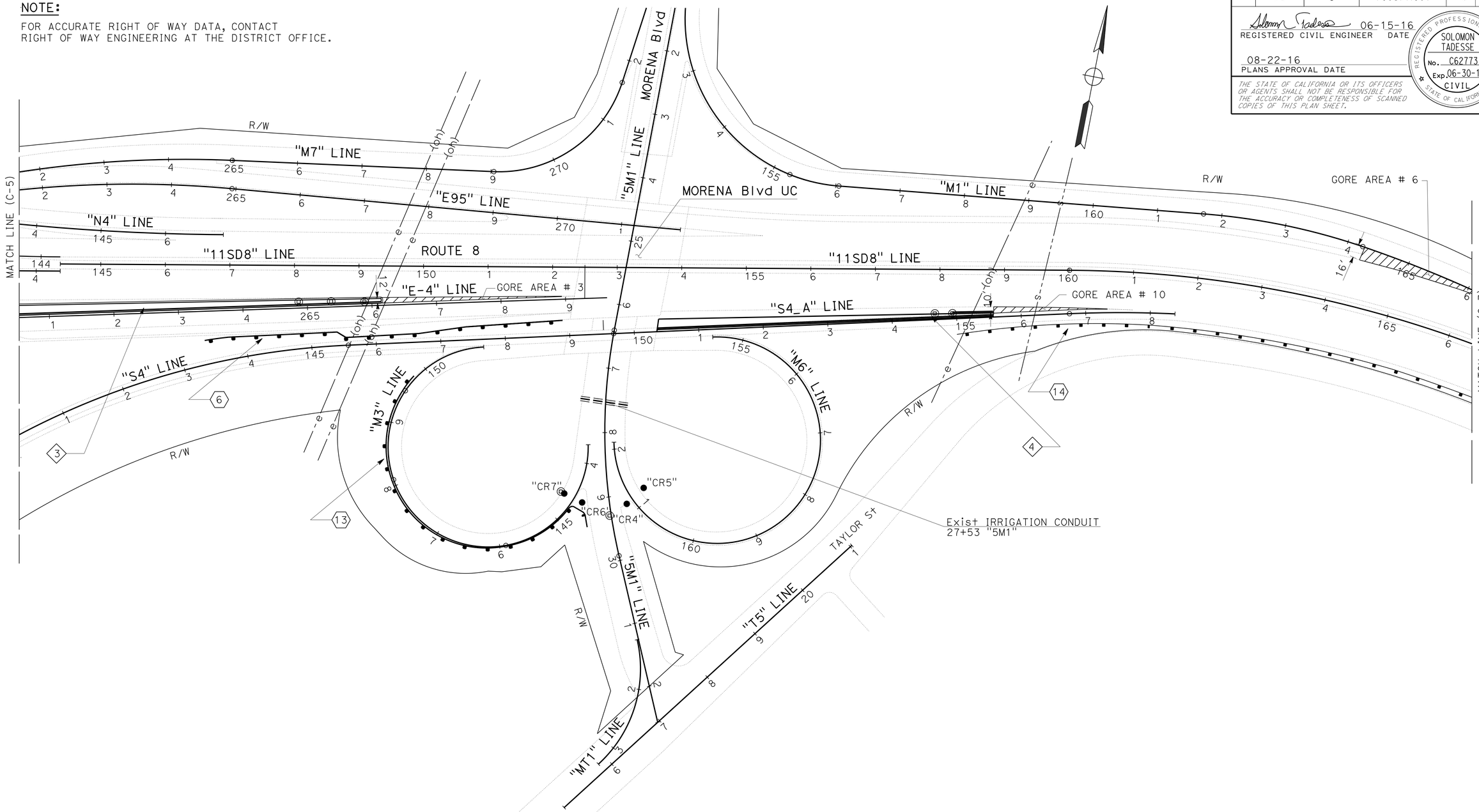

CONSTRUCTION DETAILS

CONSTRUCTION LOCATIONS KEY MAP

NO SCALE

C-6

STATE OF CALIFORNIA - DEPARTMENT OF TRANSPORTATION
Caltrans PROJECT DEVELOPMENT

FUNCTIONAL SUPERVISOR: KAZIM MAMDANI
CALCULATED-DESIGNED BY: ARY JAFF
CHECKED BY: SOLOMON TADESSE
REVISED BY
DATE REVISED

LAST REVISION 06-20-16
DATE PLOTTED => 04-OCT-2016
TIME PLOTTED => 11:29

Dist	COUNTY	ROUTE	POST MILES TOTAL PROJECT	SHEET No.	TOTAL SHEETS
11	SD	8	T0.5/R0.7	17	162

REGISTERED CIVIL ENGINEER 06-15-16 DATE

08-22-16
PLANS APPROVAL DATE

REGISTERED PROFESSIONAL ENGINEER
SOLOMON TADESSE
No. C62773
Exp. 06-30-18
CIVIL
STATE OF CALIFORNIA

THE STATE OF CALIFORNIA OR ITS OFFICERS OR AGENTS SHALL NOT BE RESPONSIBLE FOR THE ACCURACY OR COMPLETENESS OF SCANNED COPIES OF THIS PLAN SHEET.

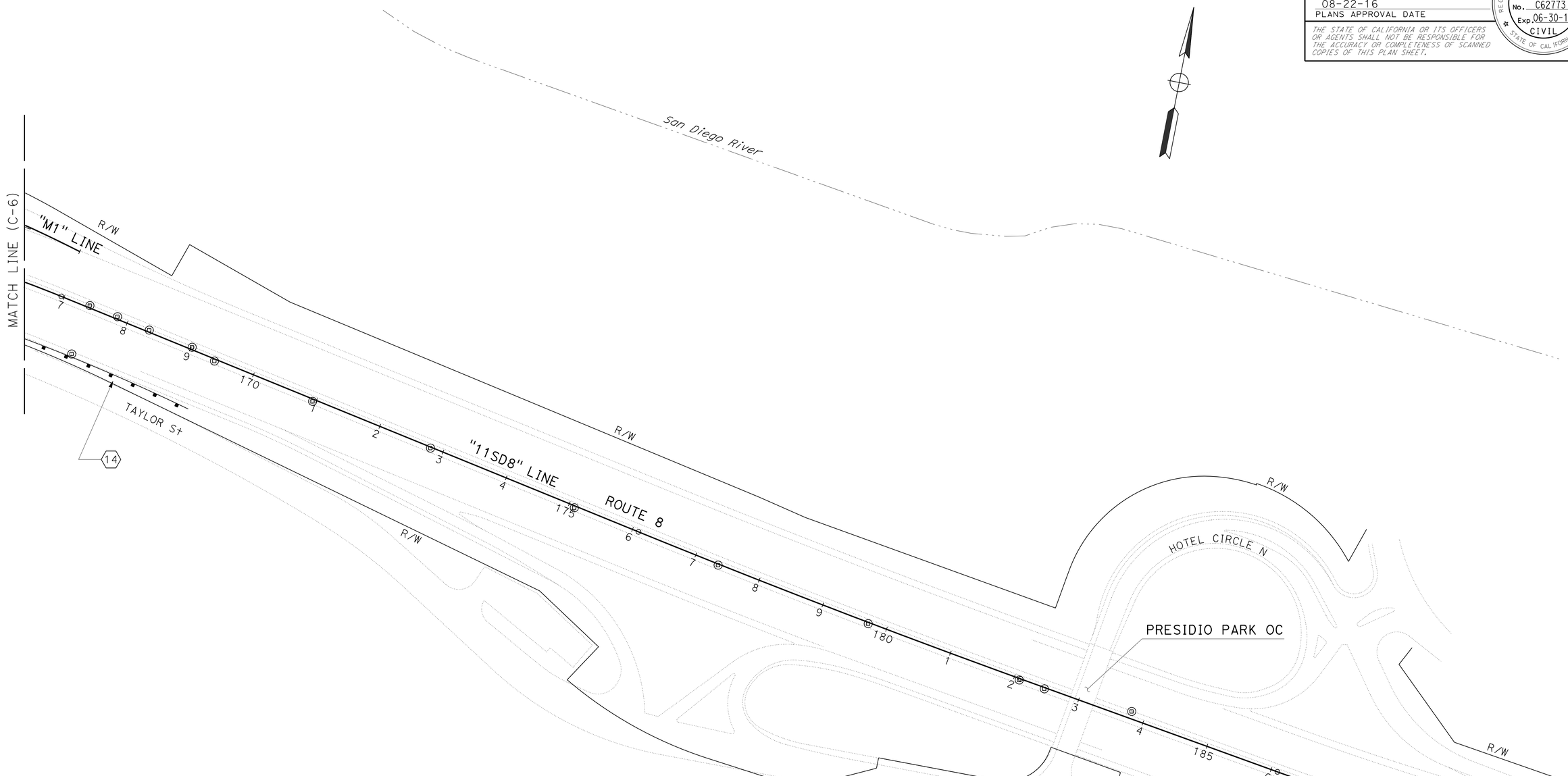

CONSTRUCTION DETAILS

CONSTRUCTION LOCATIONS KEY MAP

NO SCALE

C-7

STATE OF CALIFORNIA - DEPARTMENT OF TRANSPORTATION
Caltrans® PROJECT DEVELOPMENT

FUNCTIONAL SUPERVISOR: KAZIM MAMDANI
CALCULATED-DESIGNED BY: JIM ALSHIEK
CHECKED BY: SOLOMON TADESSE
REVISED BY
DATE REVISED

LAST REVISION 06-20-16
DATE PLOTTED => 04-OCT-2016
TIME PLOTTED => 11:29

Dist	COUNTY	ROUTE	POST MILES TOTAL PROJECT	SHEET No.	TOTAL SHEETS
11	SD	8	T0.5/R0.7	18	162

REGISTERED CIVIL ENGINEER 06-15-16 DATE

08-22-16
PLANS APPROVAL DATE

REGISTERED PROFESSIONAL ENGINEER SOLOMON TADESSE No. C62773 Exp. 06-30-18 CIVIL STATE OF CALIFORNIA

THE STATE OF CALIFORNIA OR ITS OFFICERS OR AGENTS SHALL NOT BE RESPONSIBLE FOR THE ACCURACY OR COMPLETENESS OF SCANNED COPIES OF THIS PLAN SHEET.

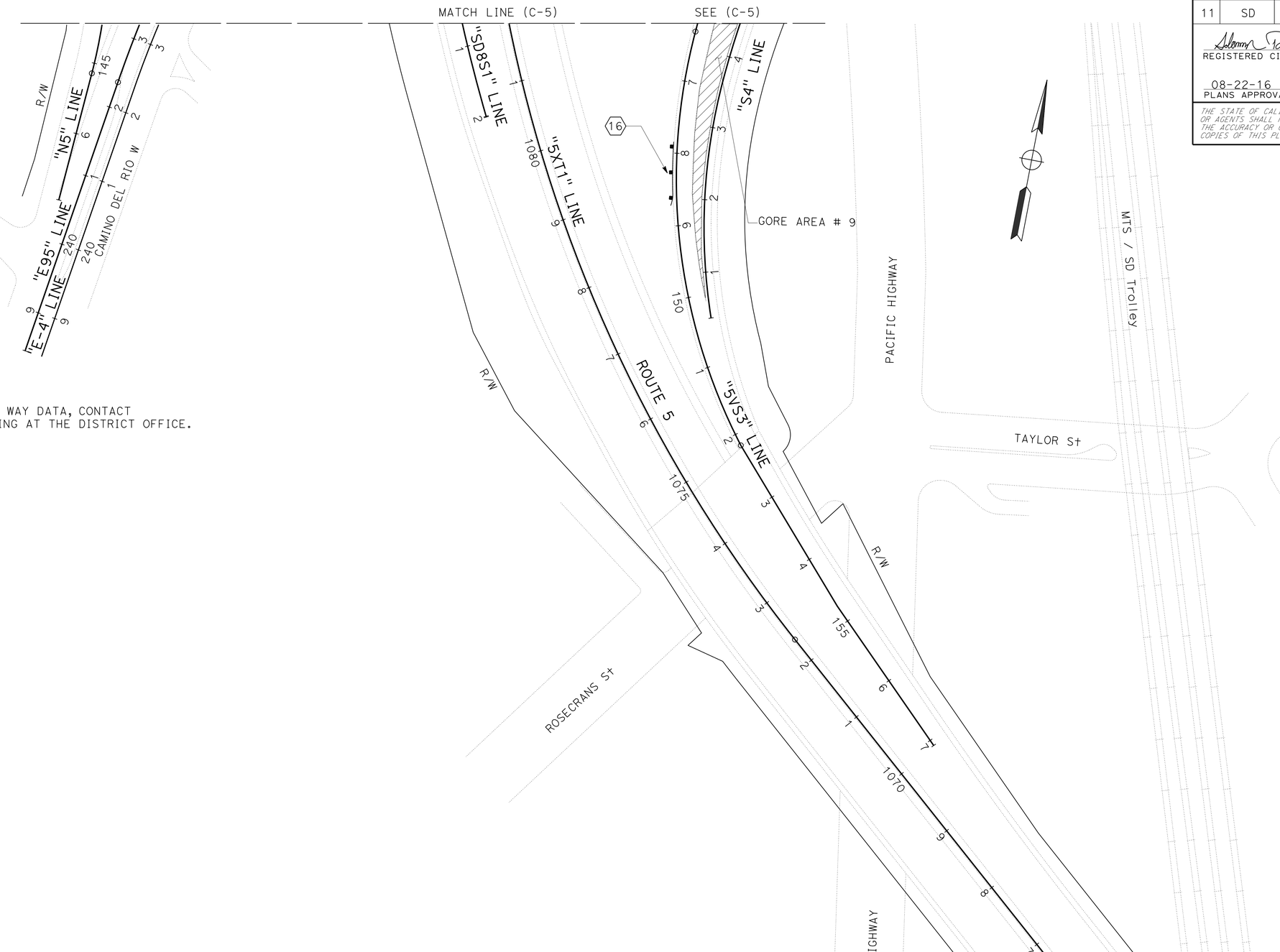

NOTE:

FOR ACCURATE RIGHT OF WAY DATA, CONTACT RIGHT OF WAY ENGINEERING AT THE DISTRICT OFFICE.

CONSTRUCTION DETAILS

CONSTRUCTION LOCATIONS KEY MAP

NO SCALE

C-8

STATE OF CALIFORNIA - DEPARTMENT OF TRANSPORTATION

Caltrans® PROJECT DEVELOPMENT

FUNCTIONAL SUPERVISOR: KAZIM MAMDANI

CALCULATED-DESIGNED BY: JIM ALSHIEK

CHECKED BY: SOLOMON TADESSE

REVISED BY

DATE REVISED

LAST REVISION 06-20-16

DATE PLOTTED => 04-OCT-2016
TIME PLOTTED => 11:29

Dist	COUNTY	ROUTE	POST MILES TOTAL PROJECT	SHEET No.	TOTAL SHEETS
11	SD	8	T0.5/R0.7	19	162

REGISTERED CIVIL ENGINEER 06-15-16 DATE

08-22-16
PLANS APPROVAL DATE

REGISTERED PROFESSIONAL ENGINEER
SOLOMON TADESSE
No. C62773
Exp. 06-30-18
CIVIL
STATE OF CALIFORNIA

THE STATE OF CALIFORNIA OR ITS OFFICERS OR AGENTS SHALL NOT BE RESPONSIBLE FOR THE ACCURACY OR COMPLETENESS OF SCANNED COPIES OF THIS PLAN SHEET.

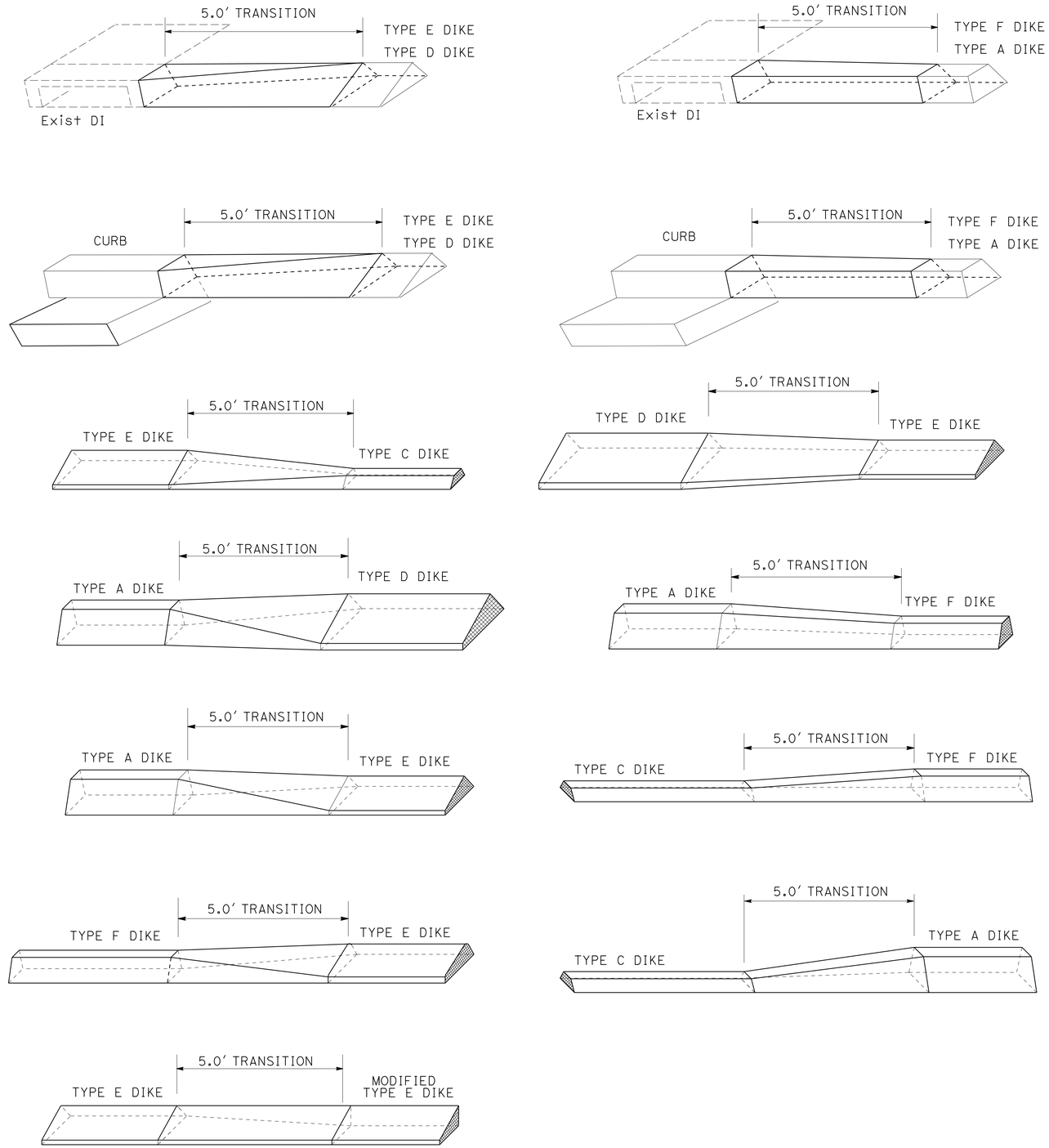

ELEVATION
DIKE TRANSITION DETAILS

CONSTRUCTION DETAILS

NO SCALE

C-9

STATE OF CALIFORNIA - DEPARTMENT OF TRANSPORTATION
Caltrans PROJECT DEVELOPMENT

FUNCTIONAL SUPERVISOR: KAZIM MAMDANI
CALCULATED-DESIGNED BY: ARY JAFF
CHECKED BY: SOLOMON TADESSE
REVISED BY
DATE REVISED

LAST REVISION 06-20-16
DATE PLOTTED => 04-OCT-2016
TIME PLOTTED => 11:29

Dist	COUNTY	ROUTE	POST MILES TOTAL PROJECT	SHEET No.	TOTAL SHEETS
11	SD	8	T0.5/R0.7	20	162

REGISTERED CIVIL ENGINEER 06-15-16 DATE

08-22-16
PLANS APPROVAL DATE

REGISTERED PROFESSIONAL ENGINEER SOLOMON TADESSE No. C62773 Exp. 06-30-18 CIVIL STATE OF CALIFORNIA

THE STATE OF CALIFORNIA OR ITS OFFICERS OR AGENTS SHALL NOT BE RESPONSIBLE FOR THE ACCURACY OR COMPLETENESS OF SCANNED COPIES OF THIS PLAN SHEET.

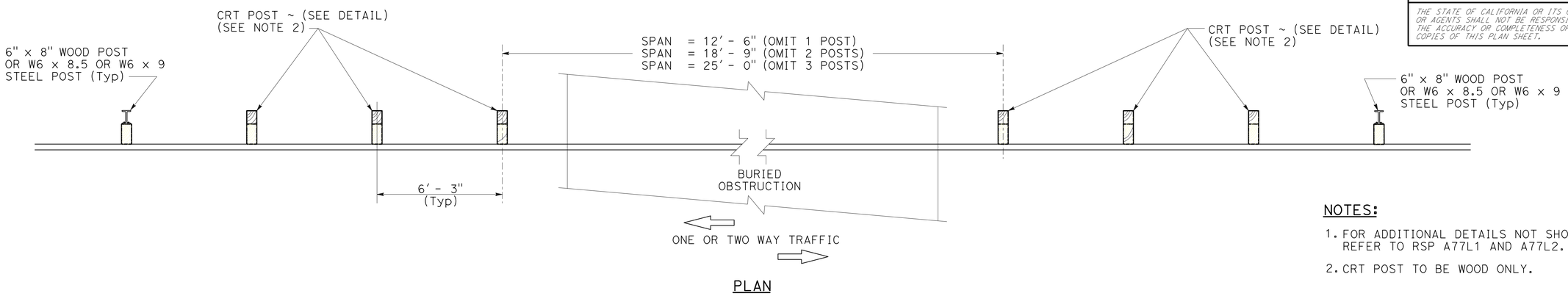

PLAN

NOTES:

1. FOR ADDITIONAL DETAILS NOT SHOWN ON THIS PLAN, REFER TO RSP A77L1 AND A77L2.
2. CRT POST TO BE WOOD ONLY.

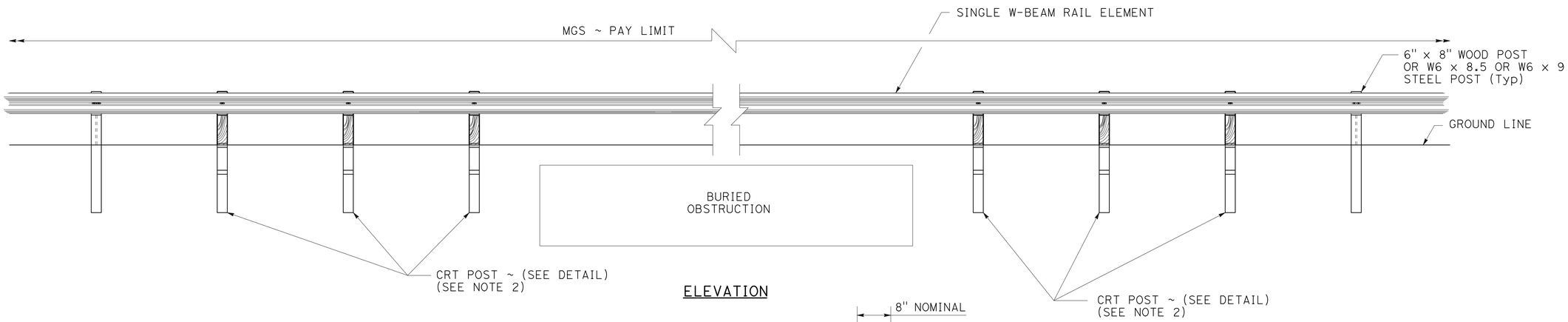

ELEVATION

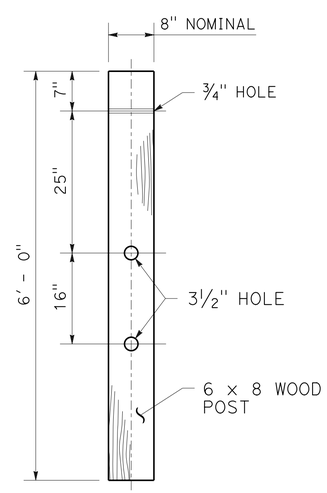

CONTROLLED RELEASING
TERMINAL (CRT) POST DETAIL

MIDWEST GUARDRAIL SYSTEM DETAILS

CONSTRUCTION DETAILS
C-10

NO SCALE

STATE OF CALIFORNIA - DEPARTMENT OF TRANSPORTATION
Caltrans® PROJECT DEVELOPMENT

FUNCTIONAL SUPERVISOR: KAZIM MAMDANI
CALCULATED-DESIGNED BY: ARY JAFF
CHECKED BY: SOLOMON TADESSE
REVISED BY
DATE REVISED

LAST REVISION 06-20-16
DATE PLOTTED => 04-OCT-2016
TIME PLOTTED => 11:29

Dist	COUNTY	ROUTE	POST MILES TOTAL PROJECT	SHEET No.	TOTAL SHEETS
11	SD	8	T0.5/R0.7	21	162

REGISTERED CIVIL ENGINEER 06-15-16 DATE

08-22-16
PLANS APPROVAL DATE

REGISTERED PROFESSIONAL ENGINEER SOLOMON TADESSE No. C62773 Exp. 06-30-18 CIVIL STATE OF CALIFORNIA

THE STATE OF CALIFORNIA OR ITS OFFICERS OR AGENTS SHALL NOT BE RESPONSIBLE FOR THE ACCURACY OR COMPLETENESS OF SCANNED COPIES OF THIS PLAN SHEET.

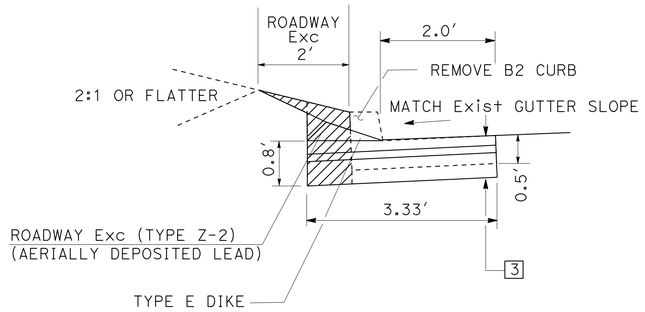

SLOPE BEHIND CURB
CASE 3

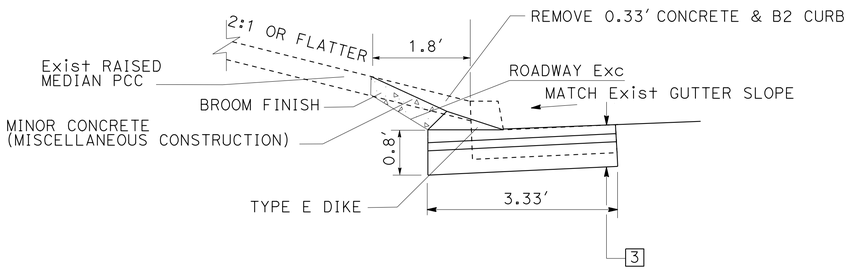

RAISED MEDIAN CONCRETE BEHIND CURB
CASE 2

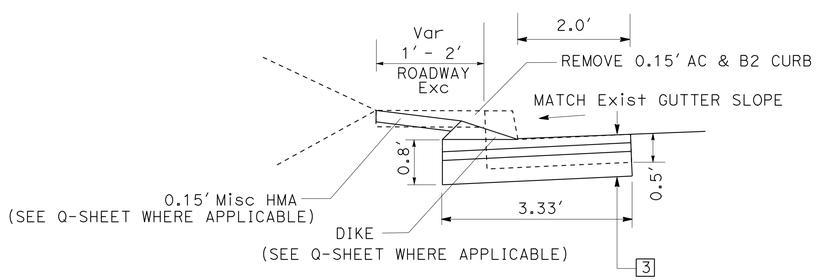

AC STRIP BEHIND CURB
CASE 1

TYPE B2 CURB REMOVAL CASES

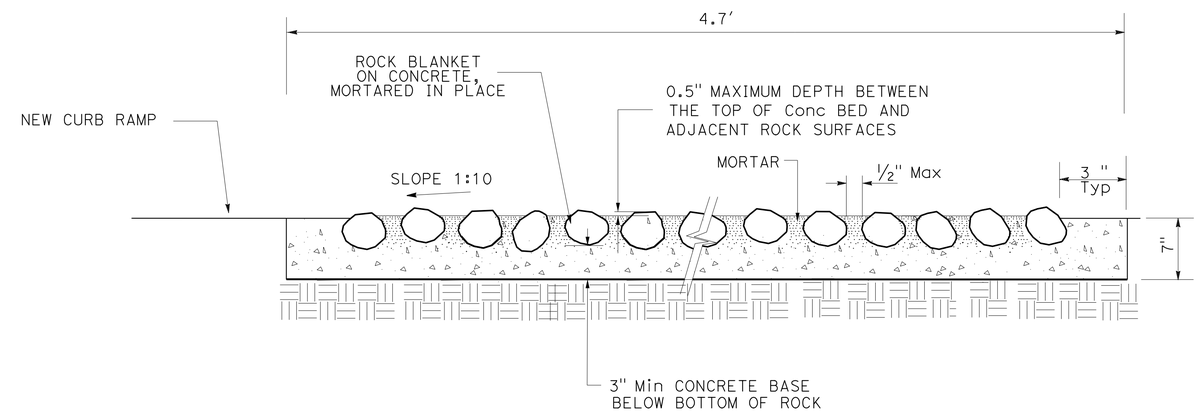

ROCK BLANKET

(SEE C-17 FOR LOCATION)

CONSTRUCTION DETAILS
MISCELLANEOUS DETAILS

NO SCALE

C-11

STATE OF CALIFORNIA - DEPARTMENT OF TRANSPORTATION
Caltrans® PROJECT DEVELOPMENT

FUNCTIONAL SUPERVISOR: KAZIM MAMDANI
CALCULATED-DESIGNED BY: ARY JAFF
CHECKED BY: SOLOMON TADESSE
REVISED BY
DATE REVISED

LAST REVISION 06-20-16
DATE PLOTTED => 04-OCT-2016
TIME PLOTTED => 11:29

Dist	COUNTY	ROUTE	POST MILES TOTAL PROJECT	SHEET No.	TOTAL SHEETS
11	SD	8	T0.5/R0.7	22	162

REGISTERED CIVIL ENGINEER 06-15-16 DATE

08-22-16
PLANS APPROVAL DATE

REGISTERED PROFESSIONAL ENGINEER SOLOMON TADESSE No. C62773 Exp. 06-30-18 CIVIL STATE OF CALIFORNIA

THE STATE OF CALIFORNIA OR ITS OFFICERS OR AGENTS SHALL NOT BE RESPONSIBLE FOR THE ACCURACY OR COMPLETENESS OF SCANNED COPIES OF THIS PLAN SHEET.

NOTES:

1. FOR ADDITIONAL INFORMATION AND DETAILS NOT SHOWN, SEE STANDARD PLAN A76A & A76B.

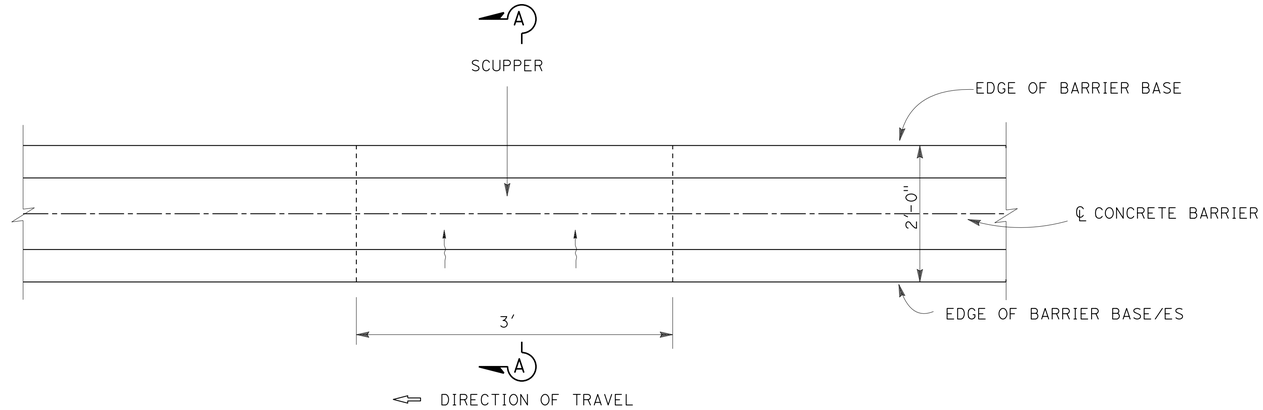

PLAN

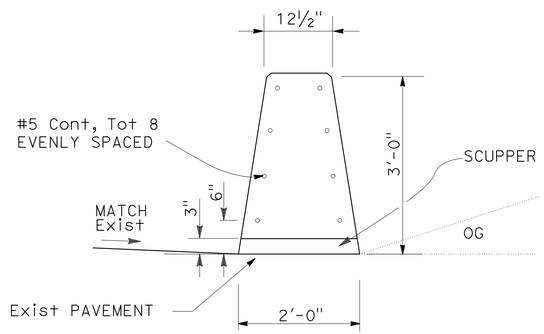

SECTION A-A

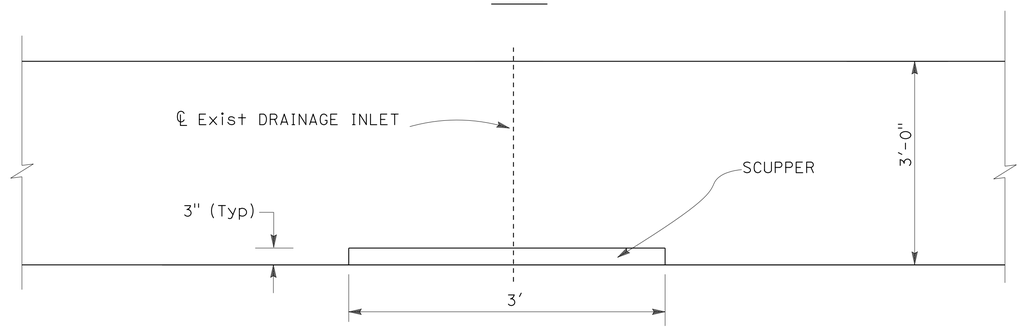

ELEVATION

CONCRETE BARRIER (TYPE 60) WITH SCUPPER AT DRAINAGE INLETS

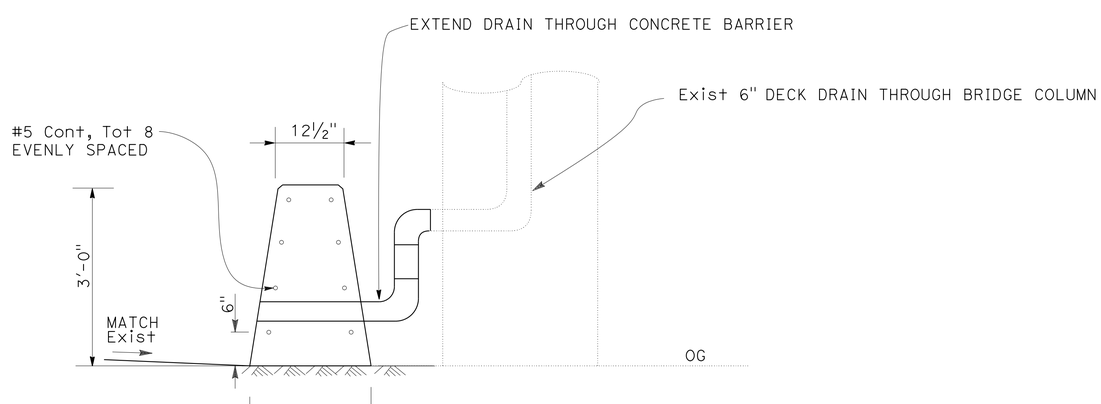

DRAIN OUTLETS THROUGH BRIDGE COLUMN (2 LOCATIONS)

CONSTRUCTION DETAILS

NO SCALE

C-12

STATE OF CALIFORNIA - DEPARTMENT OF TRANSPORTATION
Caltrans® PROJECT DEVELOPMENT

FUNCTIONAL SUPERVISOR: KAZIM MAMDANI
CALCULATED-DESIGNED BY: ARY JAFF
CHECKED BY: SOLOMON TADESSE
REVISED BY
DATE REVISED

LAST REVISION 06-20-16
DATE PLOTTED => 04-OCT-2016
TIME PLOTTED => 11:29

Dist	COUNTY	ROUTE	POST MILES TOTAL PROJECT	SHEET No.	TOTAL SHEETS
11	SD	8	T0.5/R0.7	23	162

REGISTERED CIVIL ENGINEER 06-15-16 DATE

08-22-16
PLANS APPROVAL DATE

REGISTERED PROFESSIONAL ENGINEER SOLOMON TADESSE No. C62773 Exp. 06-30-18 CIVIL STATE OF CALIFORNIA

THE STATE OF CALIFORNIA OR ITS OFFICERS OR AGENTS SHALL NOT BE RESPONSIBLE FOR THE ACCURACY OR COMPLETENESS OF SCANNED COPIES OF THIS PLAN SHEET.

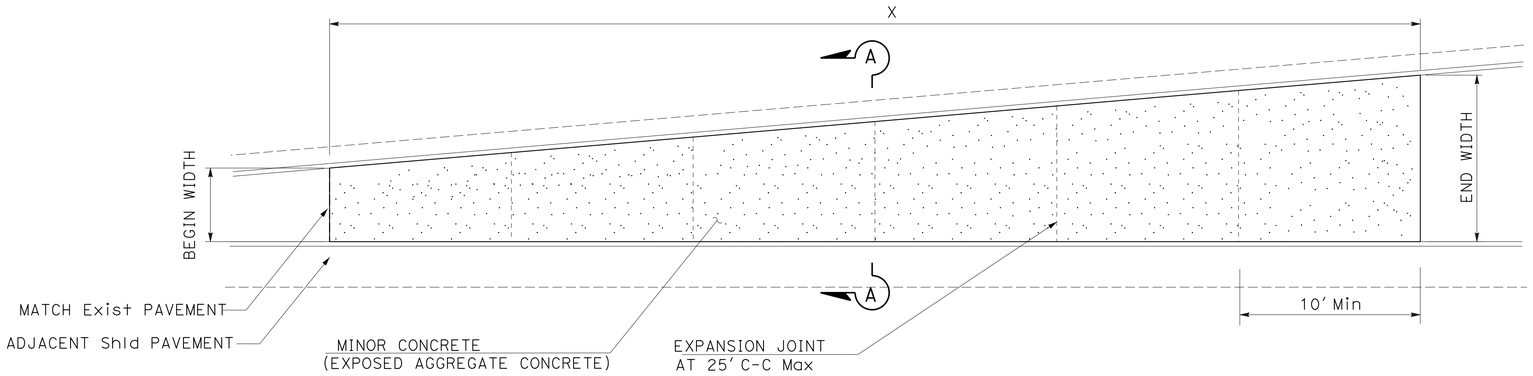

BEYOND GORE PAVING

LOCATION	SHEET	LENGTH	WIDTH (W)	
		X	BEGIN	END
		(ft)	(ft)	(ft)
1	C-5	90	4	24
2	C-5	180	4.0	21
3	C-6	565	12.7	4.3
4	C-6	510	15.5	2.5

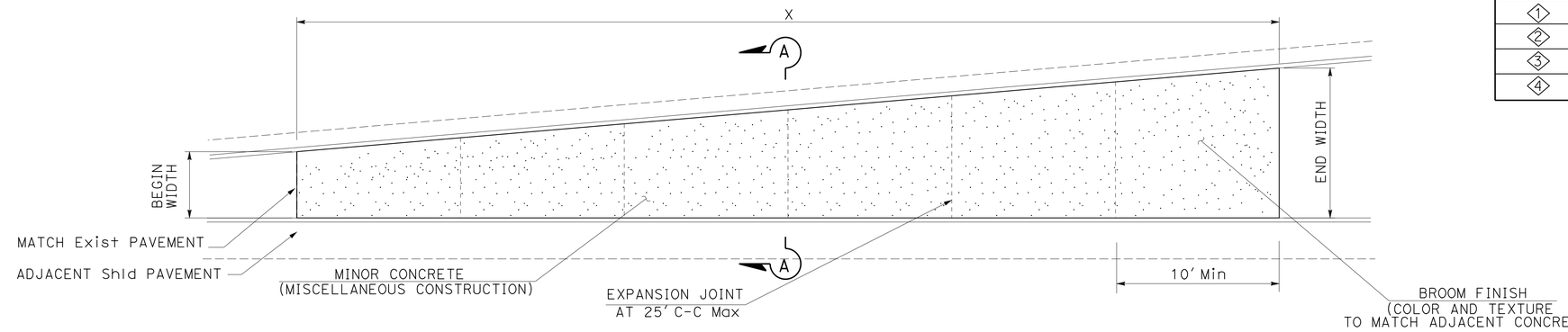

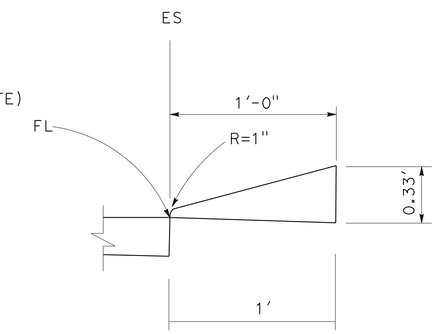

HMA DIKE
(TYPE E MODIFIED)

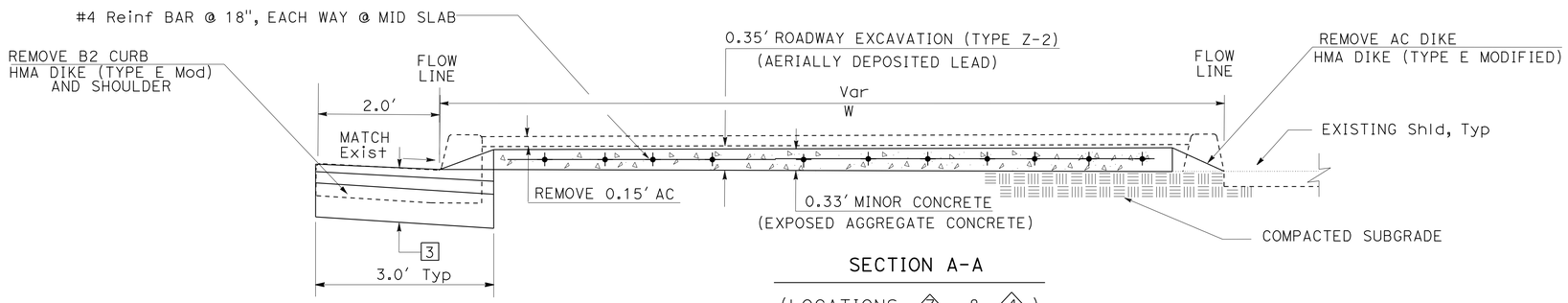

SECTION A-A
(LOCATIONS 3, & 4)

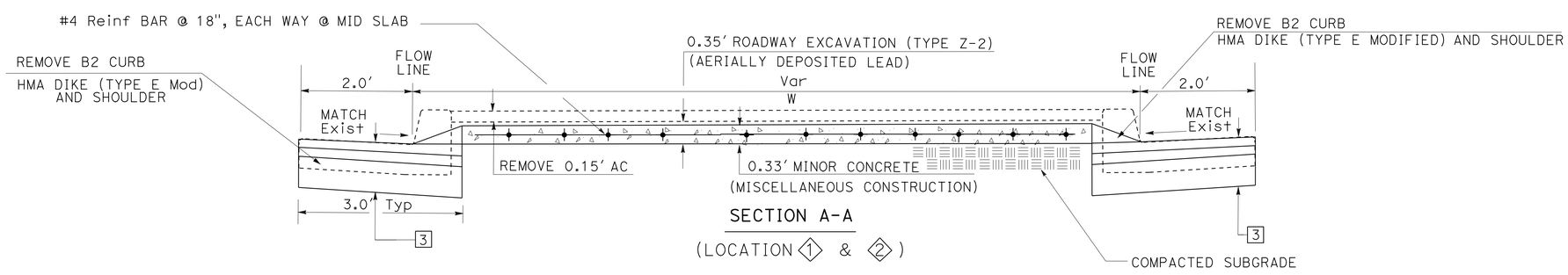

SECTION A-A
(LOCATION 1 & 2)

MINOR CONCRETE (MISCELLANEOUS CONSTRUCTION) / (EXPOSED AGGREGATE CONCRETE)

(BEYOND GORE PAVING)

NO SCALE

CONSTRUCTION DETAILS

C-13

REVISED BY | DATE REVISED
ARY JAFF | SOLOMON TADESSE
CALCULATED-DESIGNED BY | CHECKED BY
FUNCTIONAL SUPERVISOR: KAZIM MAMDANI

STATE OF CALIFORNIA - DEPARTMENT OF TRANSPORTATION
Caltrans PROJECT DEVELOPMENT

LAST REVISION 06-20-16 | DATE PLOTTED => 04-OCT-2016 | TIME PLOTTED => 11:29

Dist	COUNTY	ROUTE	POST MILES TOTAL PROJECT	SHEET No.	TOTAL SHEETS
11	SD	8	T0.5/R0.7	24	162

REGISTERED CIVIL ENGINEER 06-15-16 DATE

08-22-16
PLANS APPROVAL DATE

REGISTERED PROFESSIONAL ENGINEER SOLOMON TADESSE No. C62773 Exp. 06-30-18 CIVIL STATE OF CALIFORNIA

THE STATE OF CALIFORNIA OR ITS OFFICERS OR AGENTS SHALL NOT BE RESPONSIBLE FOR THE ACCURACY OR COMPLETENESS OF SCANNED COPIES OF THIS PLAN SHEET.

NOTES:

1. FOR DETAILS NOT SHOWN, SEE RSP A77U1, A77U2, AND A77U4.
2. TAPER THE TOP OF THE ANCHOR BLOCK AT 4:1 TO MATCH THE TOP ELEVATION OF THE TRANSITION RAILING (TYPE WB-31).
3. ALL PLATES AND BOLTS ARE GALVANIZED.

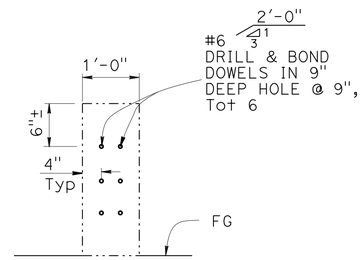

SECTION B-B

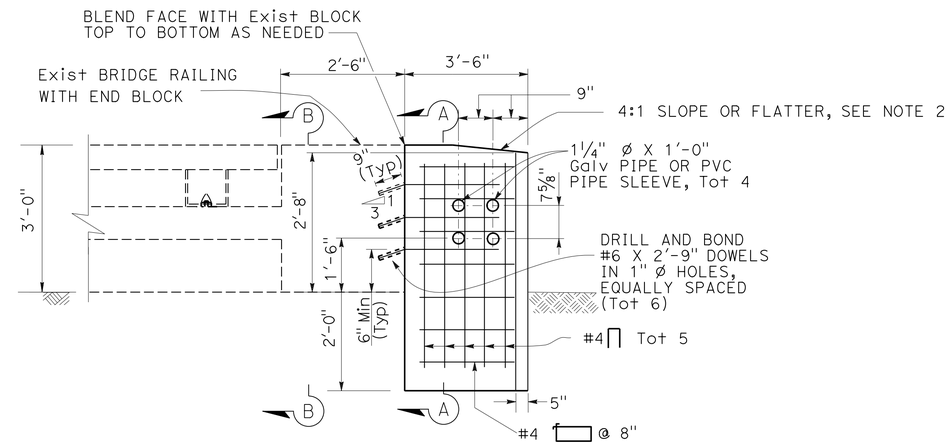

ELEVATION

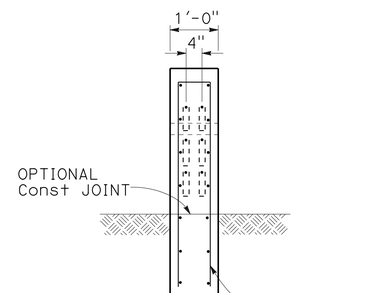

SECTION A-A

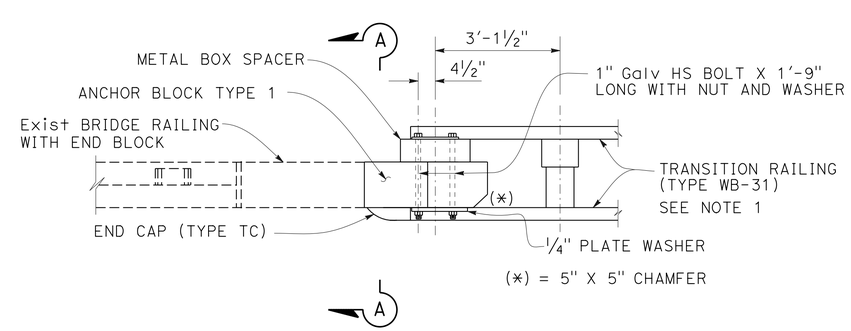

PLAN

ANCHOR BLOCK (TYPE 1)

(TO BE INSTALLED WITH MGS No 1 6 8)

CONSTRUCTION DETAILS

NO SCALE

C-14

STATE OF CALIFORNIA - DEPARTMENT OF TRANSPORTATION
Caltrans PROJECT DEVELOPMENT

FUNCTIONAL SUPERVISOR: KAZIM MAMDANI
CALCULATED-DESIGNED BY: JIM ALSHIEK
CHECKED BY: SOLOMON TADESSE
REVISED BY
DATE REVISED

LAST REVISION 06-20-16 | DATE PLOTTED => 04-OCT-2016 | TIME PLOTTED => 11:29

Dist	COUNTY	ROUTE	POST MILES TOTAL PROJECT	SHEET No.	TOTAL SHEETS
11	SD	8	T0.5/R0.7	25	162

REGISTERED CIVIL ENGINEER 06-15-16 DATE

08-22-16
PLANS APPROVAL DATE

REGISTERED PROFESSIONAL ENGINEER SOLOMON TADESSE No. C62773 Exp. 06-30-18 CIVIL STATE OF CALIFORNIA

THE STATE OF CALIFORNIA OR ITS OFFICERS OR AGENTS SHALL NOT BE RESPONSIBLE FOR THE ACCURACY OR COMPLETENESS OF SCANNED COPIES OF THIS PLAN SHEET.

NOTES:

1. FOR DETAILS NOT SHOWN, SEE RSP A77Q5, A77U1, A77U2, AND A77U4.
2. ALL PLATES AND BOLTS ARE GALVANIZED.

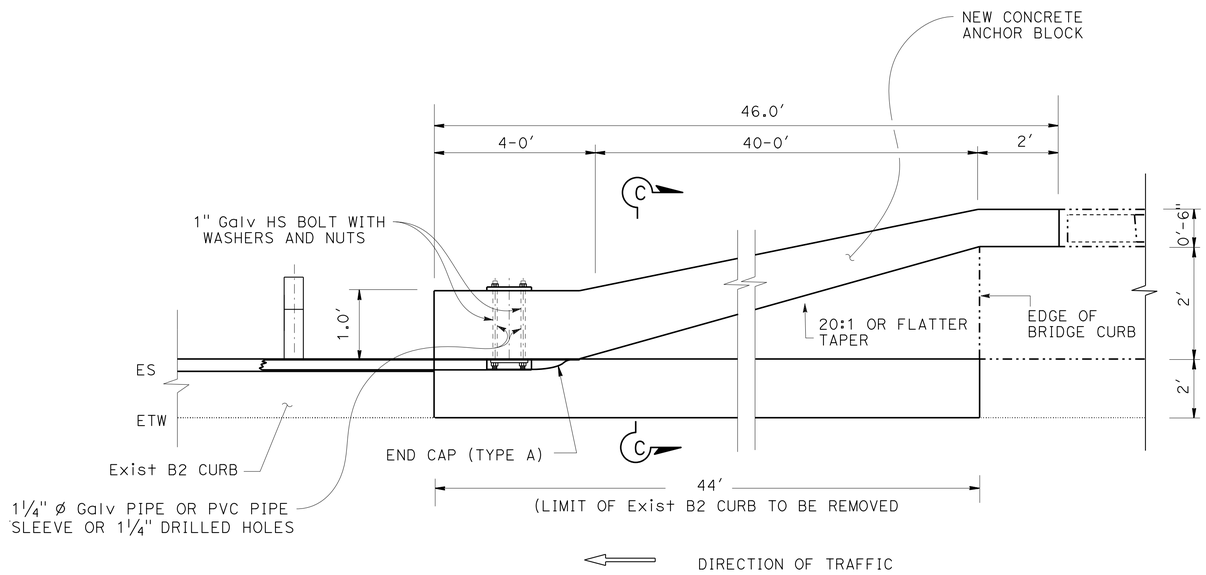

PLAN

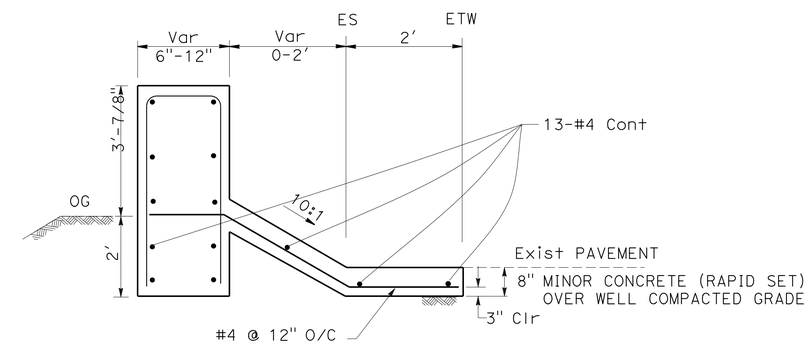

SECTION C-C

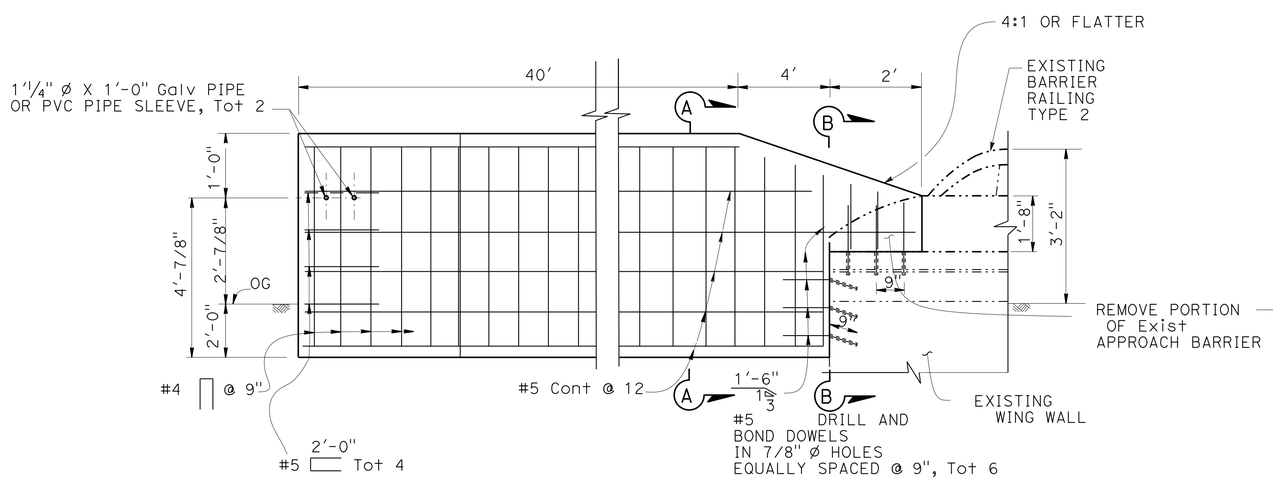

ELEVATION

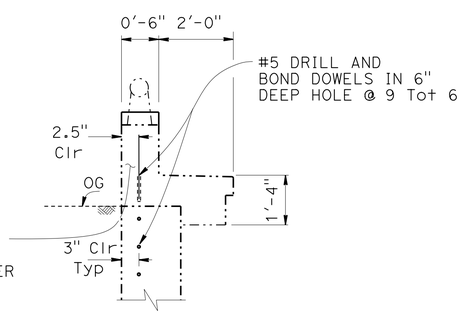

SECTION B-B

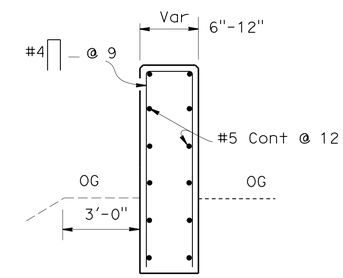

SECTION A-A

ANCHOR BLOCK (TYPE 2)

(TO BE INSTALLED WITH MGS No. 12)

"N5" 135+64 TO 136+08

CONSTRUCTION DETAILS

NO SCALE

C-15

STATE OF CALIFORNIA - DEPARTMENT OF TRANSPORTATION
Caltrans PROJECT DEVELOPMENT

FUNCTIONAL SUPERVISOR: KAZIM MAMDANI
CALCULATED-DESIGNED BY: JIM ALSHIEK
CHECKED BY: SOLOMON TADESSE
REVISED BY
DATE REVISED

LAST REVISION 06-20-16
DATE PLOTTED => 04-OCT-2016
TIME PLOTTED => 11:29

Dist	COUNTY	ROUTE	POST MILES TOTAL PROJECT	SHEET No.	TOTAL SHEETS
11	SD	8	T0.5/R0.7	26	162

REGISTERED CIVIL ENGINEER 06-15-16 DATE

08-22-16
PLANS APPROVAL DATE

REGISTERED PROFESSIONAL ENGINEER SOLOMON TADESSE No. C62773 Exp. 06-30-18 CIVIL STATE OF CALIFORNIA

THE STATE OF CALIFORNIA OR ITS OFFICERS OR AGENTS SHALL NOT BE RESPONSIBLE FOR THE ACCURACY OR COMPLETENESS OF SCANNED COPIES OF THIS PLAN SHEET.

NOTE:

1.FOR MGS CONNECTION DETAIL AND ADDITIONAL INFORMATION, SEE C-28 SHEET.

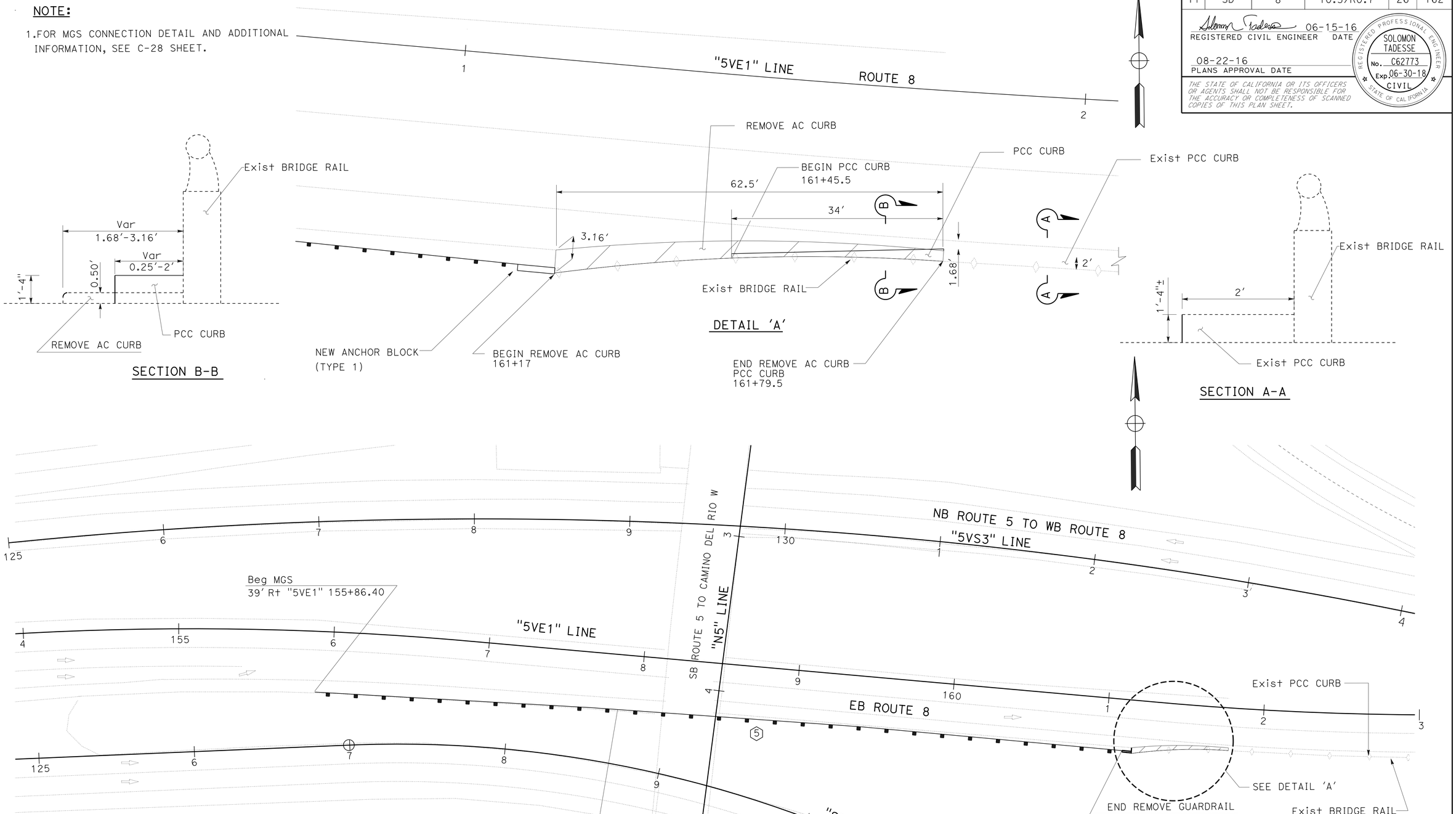

AC DIKE AND CURB REMOVAL/PCC CURB AT (MGS #5)

NO SCALE

CONSTRUCTION DETAILS

C-16

STATE OF CALIFORNIA - DEPARTMENT OF TRANSPORTATION
Caltrans PROJECT DEVELOPMENT

FUNCTIONAL SUPERVISOR: KAZIM MAMDANI
CALCULATED-DESIGNED BY: JIM ALSHIEK
CHECKED BY: SOLOMON TADESSE
REVISED BY
DATE REVISED

LAST REVISION 06-20-16
DATE PLOTTED => 04-OCT-2016
TIME PLOTTED => 11:29

Dist	COUNTY	ROUTE	POST MILES TOTAL PROJECT	SHEET No.	TOTAL SHEETS
11	SD	8	T0.5/R0.7	27	162

REGISTERED CIVIL ENGINEER 06-15-16 DATE

08-22-16
PLANS APPROVAL DATE

REGISTERED PROFESSIONAL ENGINEER SOLOMON TADESSE No. C62773 Exp. 06-30-18 CIVIL STATE OF CALIFORNIA

THE STATE OF CALIFORNIA OR ITS OFFICERS OR AGENTS SHALL NOT BE RESPONSIBLE FOR THE ACCURACY OR COMPLETENESS OF SCANNED COPIES OF THIS PLAN SHEET.

CURVE DATA

CURVE #	R	Δ	T	L
1	60.00′	8°32′20″	4.48′	8.94′

LEGEND:

S/C	SAWCUT
BOC	BACK OF CURB
BSW	BACK OF SIDEWALK
TDIKE	TOP OF DIKE
TOC	TOP OF CURB
ECP	EDGE OF CONCRETE PAVEMENT

REMOVE CONCRETE RAMP, CURB AND SIDEWALK

ROCK BLANKET

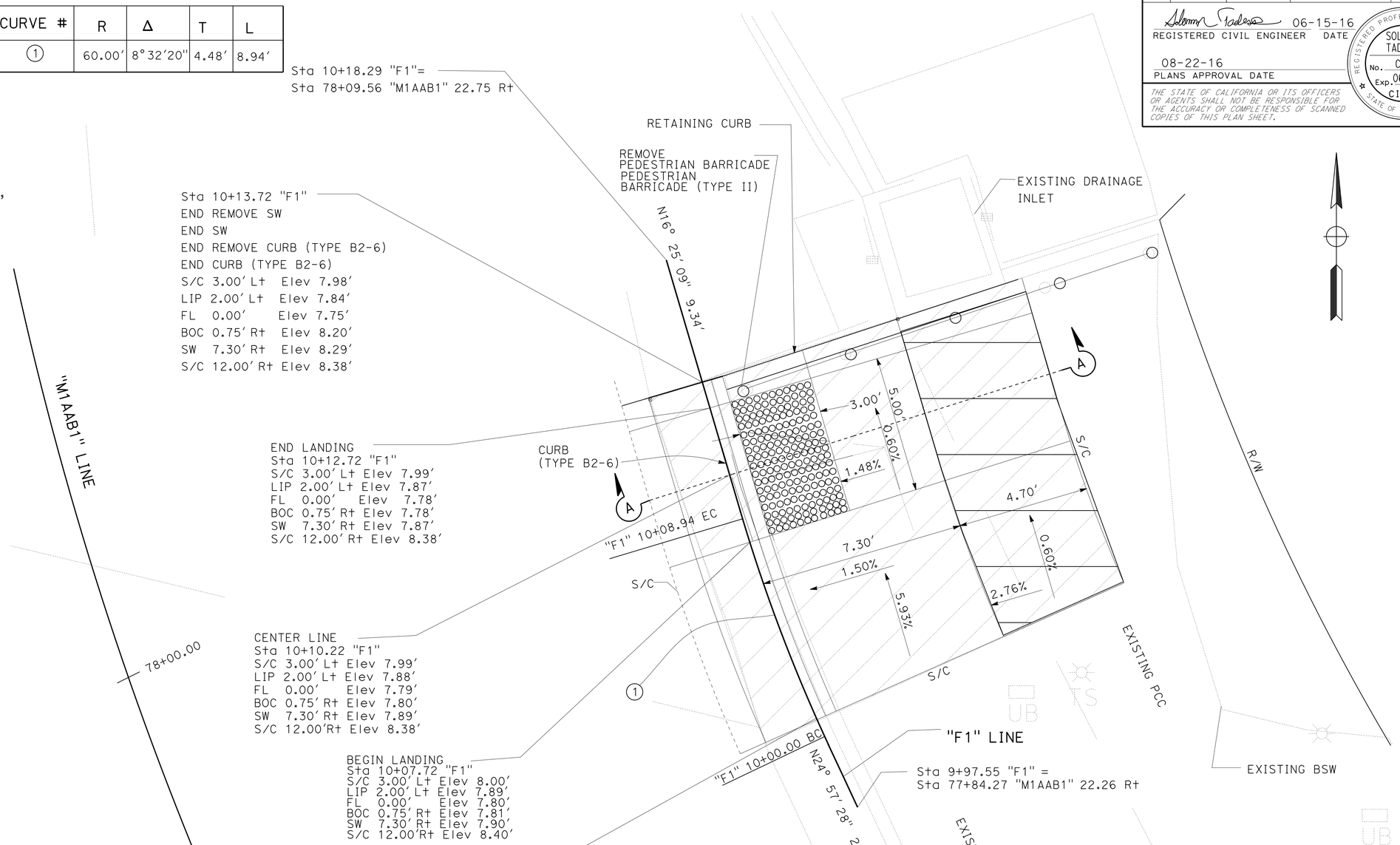

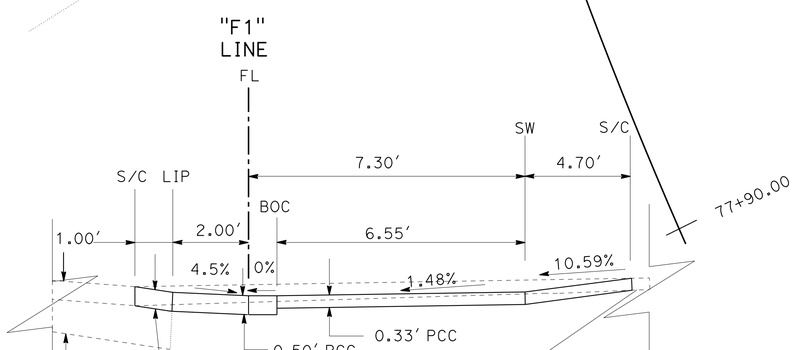

SECTION A-A
Sta 10+10.22 "F1"
NO SCALE

("CR1")
(CASE C-Mod)
PLAN VIEW
SCALE: 1" = 2′

CONSTRUCTION DETAILS

SCALE AS SHOWN

C-17

STATE OF CALIFORNIA - DEPARTMENT OF TRANSPORTATION
DESIGN
FUNCTIONAL SUPERVISOR: KAZIM MAMDANI
CALCULATED-DESIGNED BY: ARY JAFF
CHECKED BY: SOLOMON TADESSE
REVISED BY / DATE REVISED

LAST REVISION 06-20-16
DATE PLOTTED => 04-OCT-2016
TIME PLOTTED => 11:29

Dist	COUNTY	ROUTE	POST MILES TOTAL PROJECT	SHEET No.	TOTAL SHEETS
11	SD	8	T0.5/R0.7	28	162

REGISTERED CIVIL ENGINEER 06-15-16 DATE

08-22-16
PLANS APPROVAL DATE

REGISTERED PROFESSIONAL ENGINEER SOLOMON TADESSE No. C62773 Exp. 06-30-18 CIVIL STATE OF CALIFORNIA

THE STATE OF CALIFORNIA OR ITS OFFICERS OR AGENTS SHALL NOT BE RESPONSIBLE FOR THE ACCURACY OR COMPLETENESS OF SCANNED COPIES OF THIS PLAN SHEET.

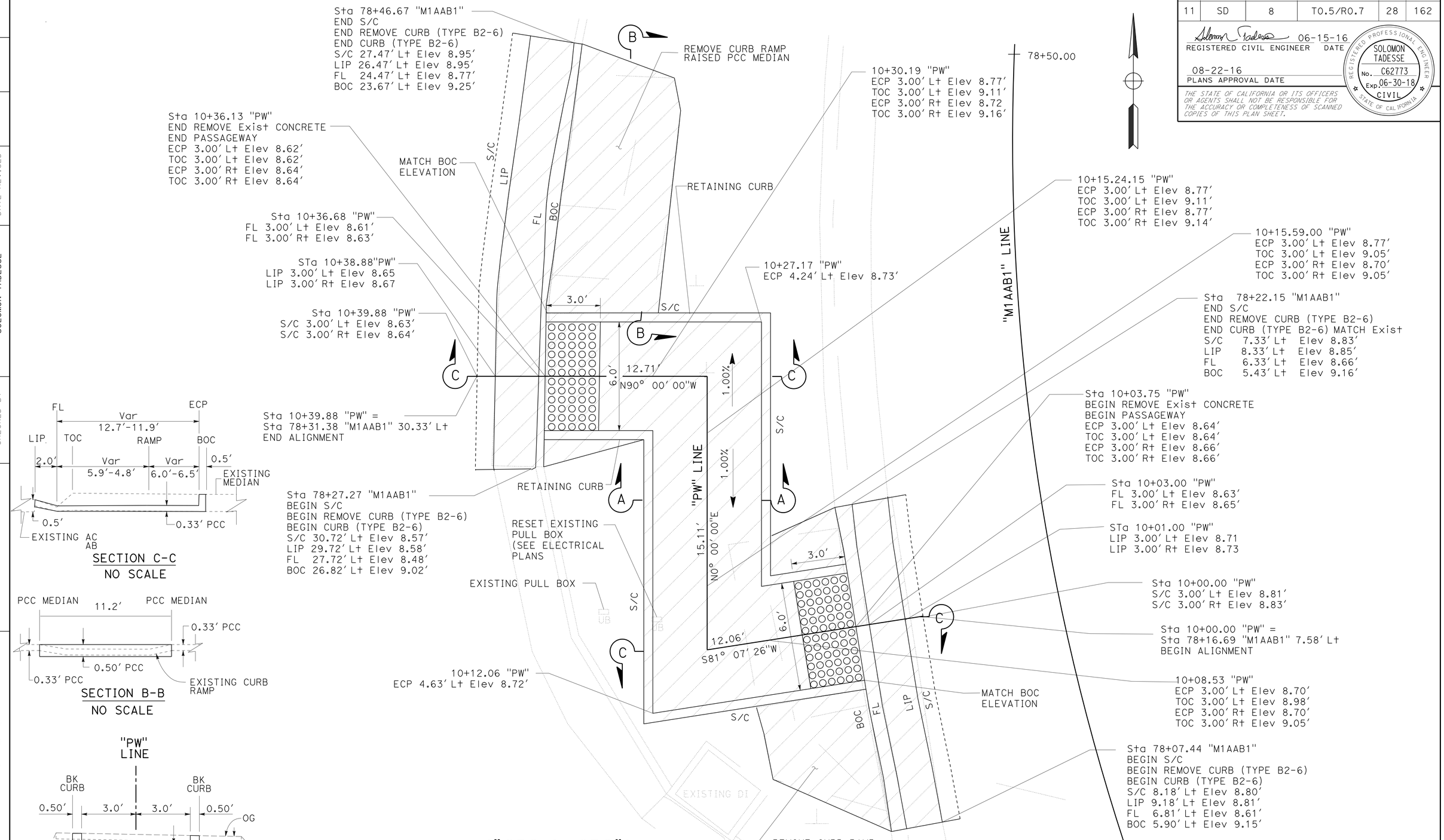

("CR2 & CR3") PLAN VIEW (TYPE B PASSAGEWAY)

SCALE: 1' = 2.5'

CONSTRUCTION DETAILS

SCALE AS SHOWN

C-18

STATE OF CALIFORNIA - DEPARTMENT OF TRANSPORTATION

DESIGN

FUNCTIONAL SUPERVISOR: KAZIM MAMDANI

CALCULATED-DESIGNED BY: ARY JAFF

CHECKED BY: SOLOMON TADESSE

REVISED BY

DATE REVISED

LAST REVISION 06-22-16

DATE PLOTTED => 04-OCT-2016

TIME PLOTTED => 11:29

Dist	COUNTY	ROUTE	POST MILES TOTAL PROJECT	SHEET No.	TOTAL SHEETS
11	SD	8	T0.5/R0.7	29	162

REGISTERED CIVIL ENGINEER 06-15-16 DATE

08-22-16
PLANS APPROVAL DATE

REGISTERED PROFESSIONAL ENGINEER SOLOMON TADESSE No. C62773 Exp. 06-30-18 CIVIL STATE OF CALIFORNIA

THE STATE OF CALIFORNIA OR ITS OFFICERS OR AGENTS SHALL NOT BE RESPONSIBLE FOR THE ACCURACY OR COMPLETENESS OF SCANNED COPIES OF THIS PLAN SHEET.

CURVE DATA

CURVE #	R	Δ	T	L
3	165.20′	5 °12′ 11"	7.51′	15.00′

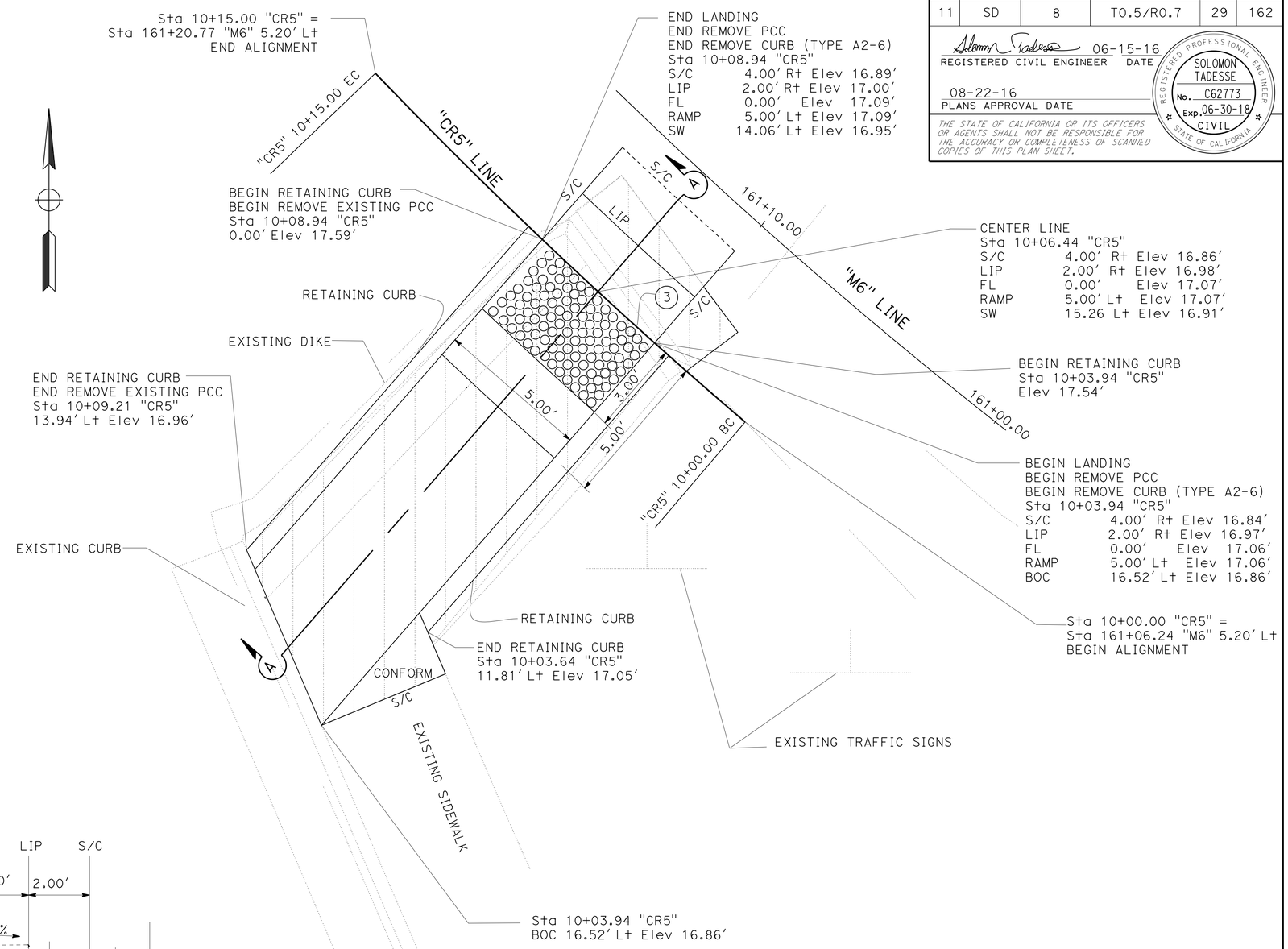

("CR4")
(CASE F)
PLAN VIEW
SCALE: 1" = 2′

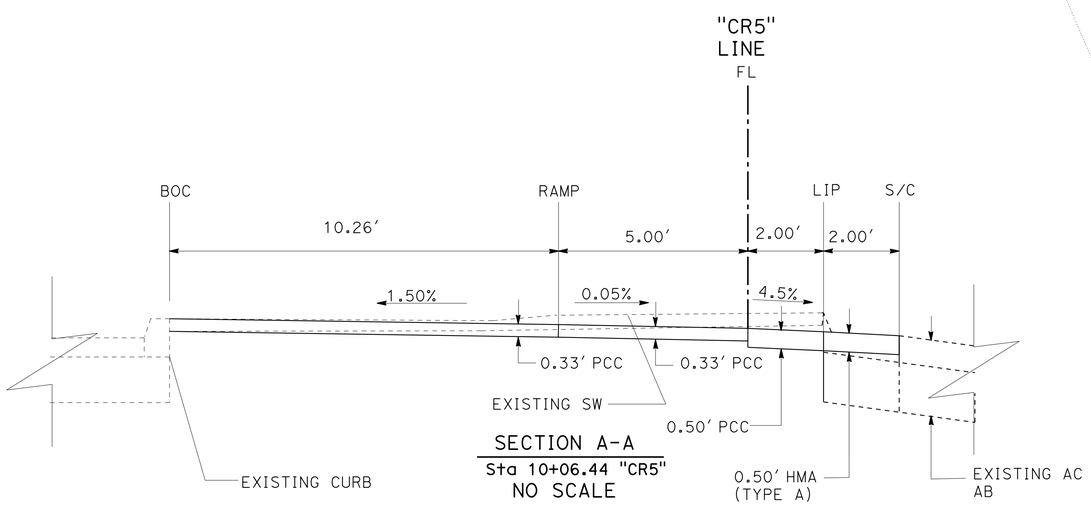

SECTION A-A
Sta 10+06.44 "CR5"
NO SCALE

CONSTRUCTION DETAILS

SCALE AS SHOWN

C-19

STATE OF CALIFORNIA - DEPARTMENT OF TRANSPORTATION
Caltrans® PROJECT DEVELOPMENT

FUNCTIONAL SUPERVISOR: KAZIM MAMDANI
CALCULATED-DESIGNED BY: ARY JAFF
CHECKED BY: SOLOMON TADESSE
REVISED BY
DATE REVISED

LAST REVISION 06-22-16
DATE PLOTTED => 04-OCT-2016
TIME PLOTTED => 11:29

Dist	COUNTY	ROUTE	POST MILES TOTAL PROJECT	SHEET No.	TOTAL SHEETS
11	SD	8	T0.5/R0.7	30	162

06-15-16
REGISTERED CIVIL ENGINEER DATE

08-22-16
PLANS APPROVAL DATE

REGISTERED PROFESSIONAL ENGINEER
SOLOMON TADESSE
No. C62773
Exp. 06-30-18
CIVIL
STATE OF CALIFORNIA

THE STATE OF CALIFORNIA OR ITS OFFICERS OR AGENTS SHALL NOT BE RESPONSIBLE FOR THE ACCURACY OR COMPLETENESS OF SCANNED COPIES OF THIS PLAN SHEET.

CURVE DATA

CURVE #	R	Δ	T	L
1	133.32′	9°53′37″	11.54′	23.02′

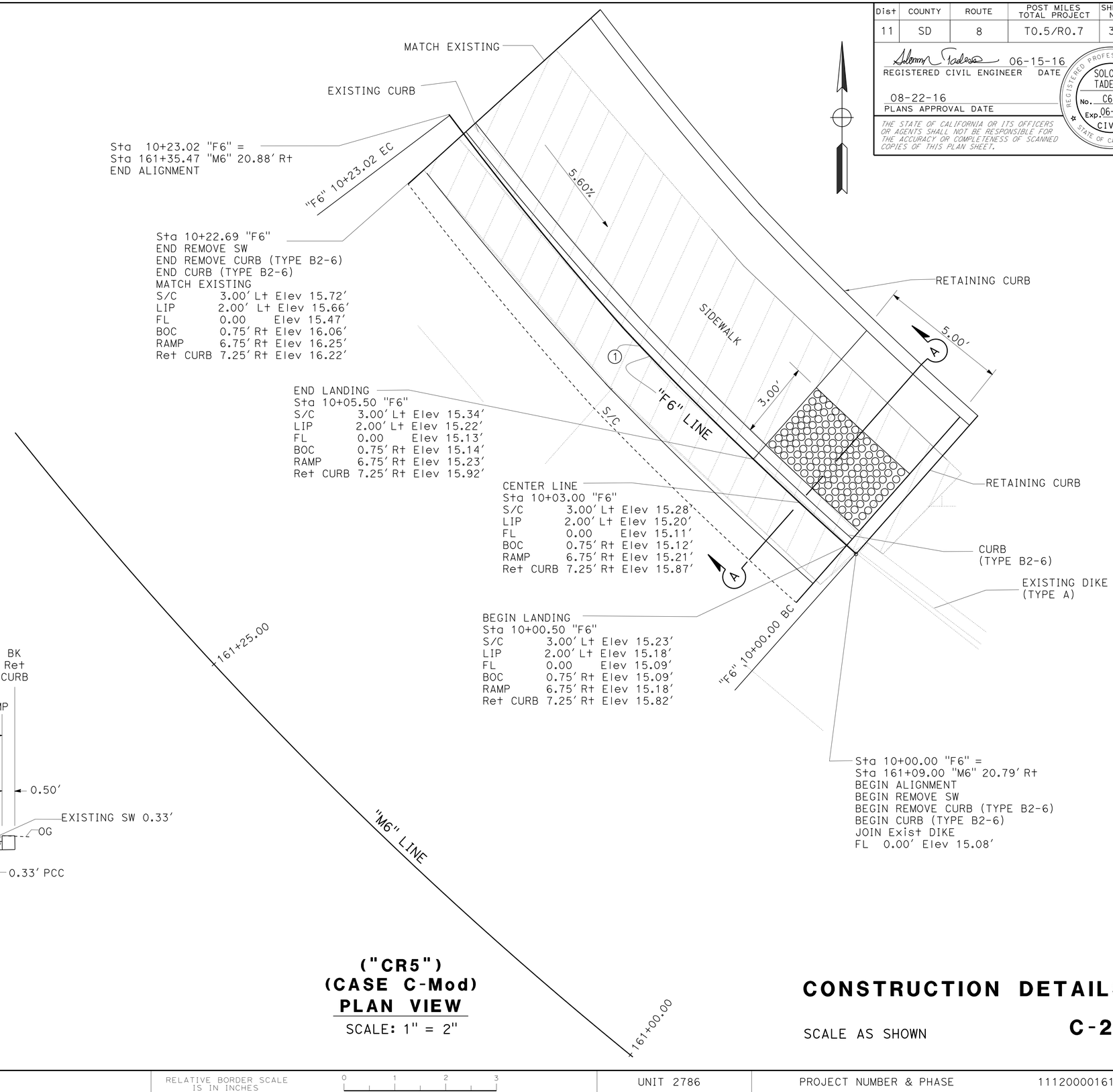

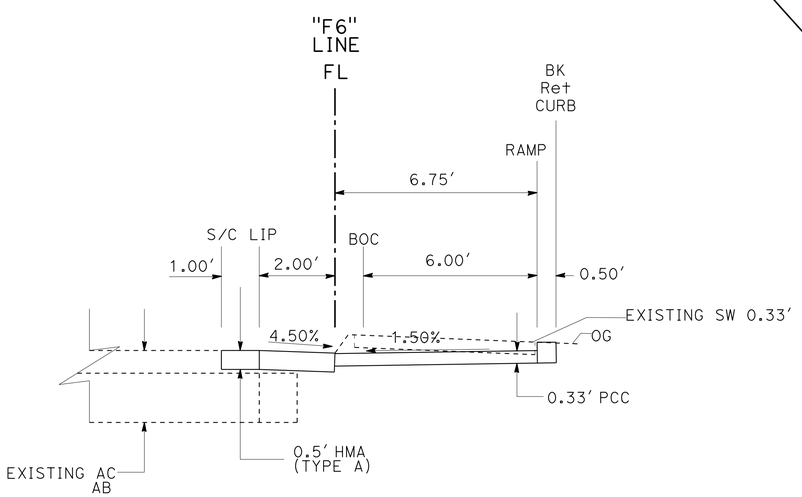

SECTION A-A
Sta 10+03.00 "F6"
NO SCALE

("CR5")
(CASE C-Mod)
PLAN VIEW
SCALE: 1" = 2"

CONSTRUCTION DETAILS

SCALE AS SHOWN

C-20

STATE OF CALIFORNIA - DEPARTMENT OF TRANSPORTATION
Caltrans® PROJECT DEVELOPMENT

FUNCTIONAL SUPERVISOR: KAZIM MAMDANI
CALCULATED-DESIGNED BY: ARY JAFF
CHECKED BY: SOLOMON TADESSE
REVISED BY
DATE REVISED

LAST REVISION 06-22-16
DATE PLOTTED => 04-OCT-2016
TIME PLOTTED => 11:29

Dist	COUNTY	ROUTE	POST MILES TOTAL PROJECT	SHEET No.	TOTAL SHEETS
11	SD	8	T0.5/R0.7	31	162

REGISTERED CIVIL ENGINEER 06-15-16 DATE

08-22-16
PLANS APPROVAL DATE

REGISTERED PROFESSIONAL ENGINEER SOLOMON TADESSE No. C62773 Exp. 06-30-18 CIVIL STATE OF CALIFORNIA

THE STATE OF CALIFORNIA OR ITS OFFICERS OR AGENTS SHALL NOT BE RESPONSIBLE FOR THE ACCURACY OR COMPLETENESS OF SCANNED COPIES OF THIS PLAN SHEET.

CURVE DATA

CURVE #	R	Δ	T	L
4	15.00′	42°01′01″	5.76′	11.00′

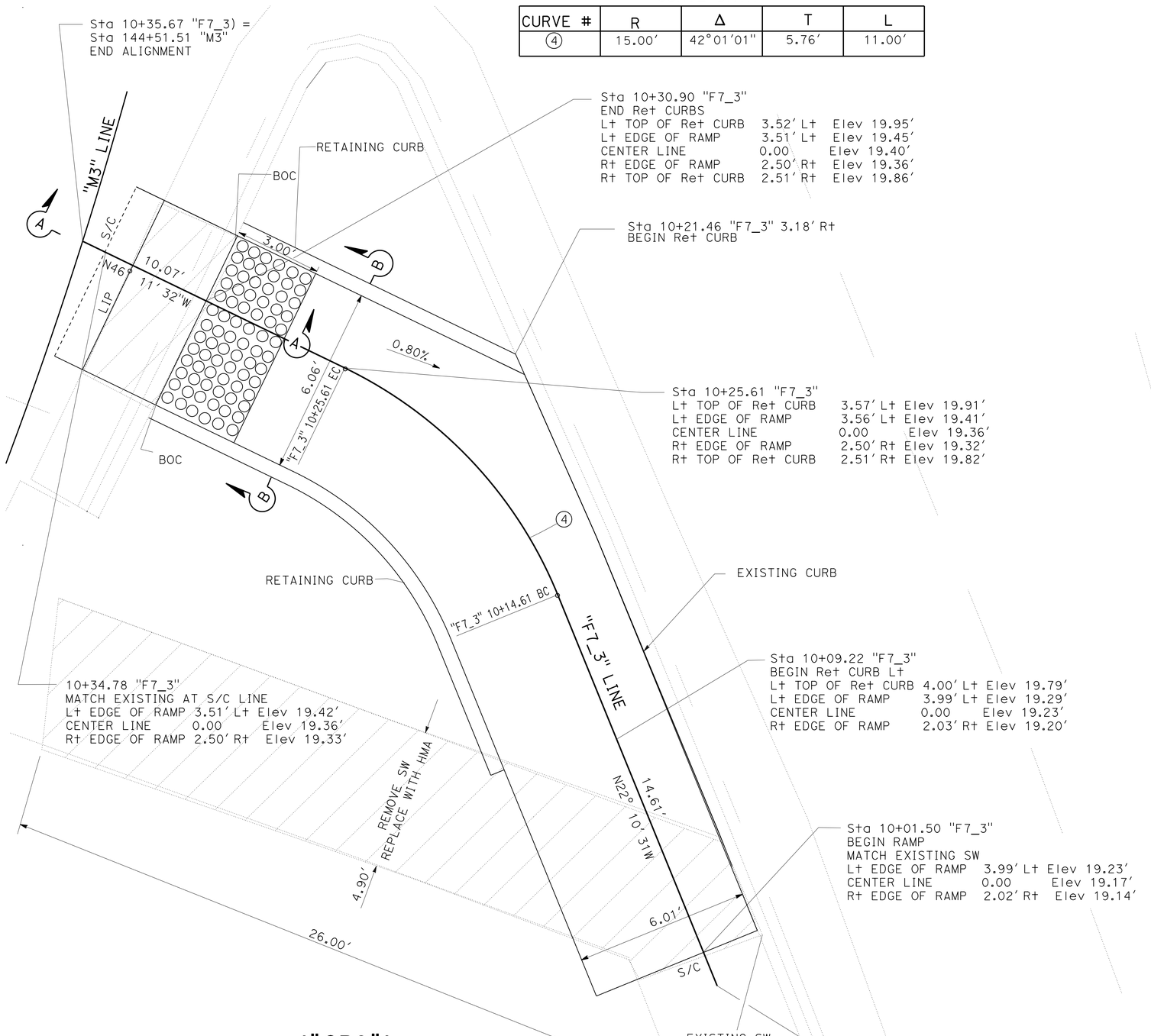

("CR6") PLAN VIEW

SCALE: 1" = 2′

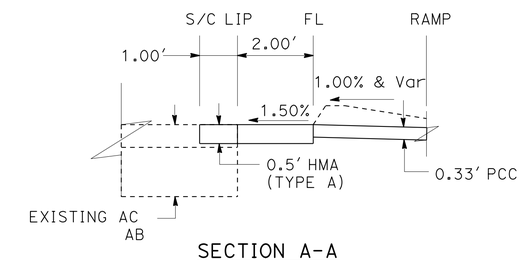

SECTION A-A

NO SCALE

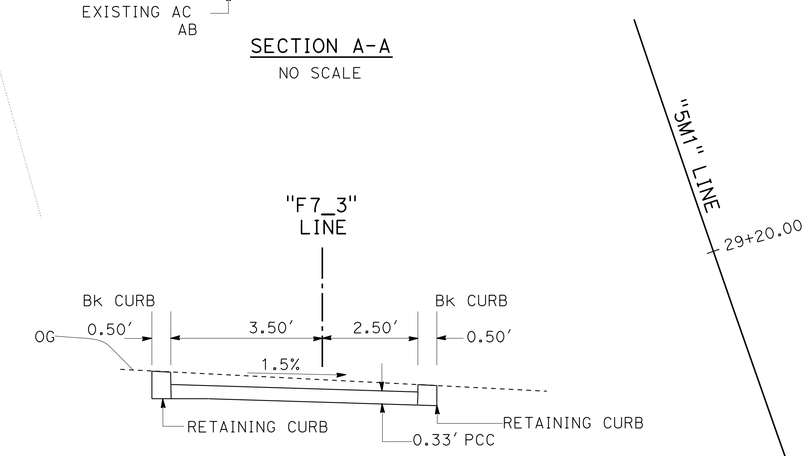

SECTION B-B

Sta 10+25.61 "F7_3"
NO SCALE

CONSTRUCTION DETAILS

SCALE AS SHOWN

C-21

STATE OF CALIFORNIA - DEPARTMENT OF TRANSPORTATION
Caltrans PROJECT DEVELOPMENT

FUNCTIONAL SUPERVISOR: KAZIM MAMDANI
CALCULATED-DESIGNED BY: ARY JAFF
CHECKED BY: SOLOMON TADESSE
REVISED BY
DATE REVISED

LAST REVISION 06-23-16
DATE PLOTTED => 04-OCT-2016
TIME PLOTTED => 11:29

Dist	COUNTY	ROUTE	POST MILES TOTAL PROJECT	SHEET No.	TOTAL SHEETS
11	SD	8	T0.5/R0.7	32	162

REGISTERED CIVIL ENGINEER 06-15-16 DATE

08-22-16
PLANS APPROVAL DATE

REGISTERED PROFESSIONAL ENGINEER SOLOMON TADESSE No. C62773 Exp. 06-30-18 CIVIL STATE OF CALIFORNIA

THE STATE OF CALIFORNIA OR ITS OFFICERS OR AGENTS SHALL NOT BE RESPONSIBLE FOR THE ACCURACY OR COMPLETENESS OF SCANNED COPIES OF THIS PLAN SHEET.

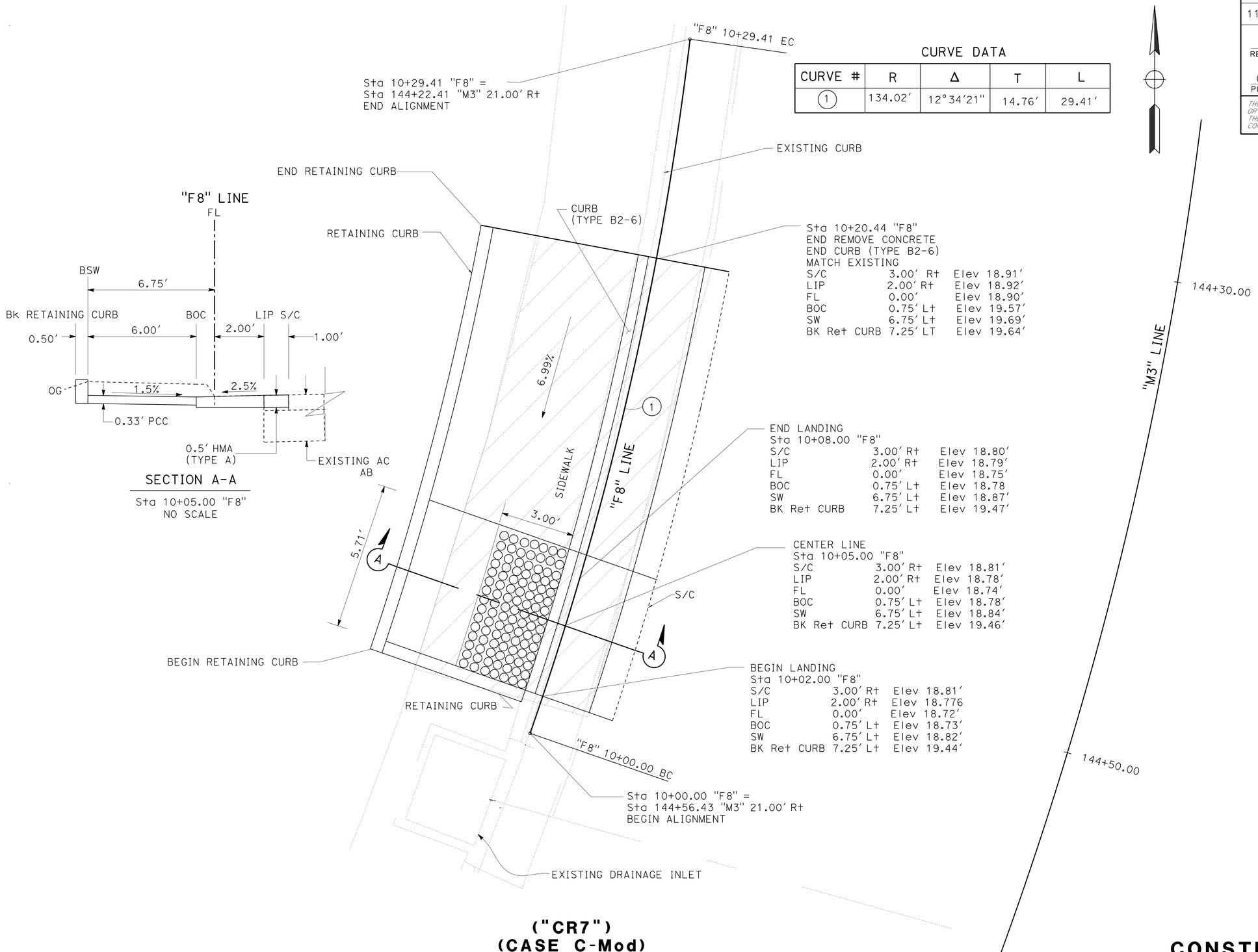

Sta 10+20.44 "F8"
END REMOVE CONCRETE
END CURB (TYPE B2-6)
MATCH EXISTING

S/C	3.00' Rt	Elev 18.91'
LIP	2.00' Rt	Elev 18.92'
FL	0.00'	Elev 18.90'
BOC	0.75' Lt	Elev 19.57'
SW	6.75' Lt	Elev 19.69'
BK Ret CURB	7.25' LT	Elev 19.64'

END LANDING
Sta 10+08.00 "F8"

S/C	3.00' Rt	Elev 18.80'
LIP	2.00' Rt	Elev 18.79'
FL	0.00'	Elev 18.75'
BOC	0.75' Lt	Elev 18.78
SW	6.75' Lt	Elev 18.87'
BK Ret CURB	7.25' Lt	Elev 19.47'

CENTER LINE
Sta 10+05.00 "F8"

S/C	3.00' Rt	Elev 18.81'
LIP	2.00' Rt	Elev 18.78'
FL	0.00'	Elev 18.74'
BOC	0.75' Lt	Elev 18.78'
SW	6.75' Lt	Elev 18.84'
BK Ret CURB	7.25' Lt	Elev 19.46'

BEGIN LANDING
Sta 10+02.00 "F8"

S/C	3.00' Rt	Elev 18.81'
LIP	2.00' Rt	Elev 18.776
FL	0.00'	Elev 18.72'
BOC	0.75' Lt	Elev 18.73'
SW	6.75' Lt	Elev 18.82'
BK Ret CURB	7.25' Lt	Elev 19.44'

CURVE DATA

CURVE #	R	Δ	T	L
1	134.02'	12°34'21"	14.76'	29.41'

("CR7")
(CASE C-Mod)
PLAN VIEW
SCALE: 1" = 2'

CONSTRUCTION DETAILS

SCALE AS SHOWN

C-22

STATE OF CALIFORNIA - DEPARTMENT OF TRANSPORTATION
Caltrans® PROJECT DEVELOPMENT

FUNCTIONAL SUPERVISOR: KAZIM MAMDANI
CALCULATED-DESIGNED BY: ARY JAFF
CHECKED BY: SOLOMON TADESSE
REVISED BY
DATE REVISED

LAST REVISION 06-23-16
DATE PLOTTED => 04-OCT-2016
TIME PLOTTED => 11:29

Dist	COUNTY	ROUTE	POST MILES TOTAL PROJECT	SHEET No.	TOTAL SHEETS
11	SD	8	T0.5/R0.7	33	162

REGISTERED CIVIL ENGINEER 06-15-16 DATE

08-22-16
PLANS APPROVAL DATE

REGISTERED PROFESSIONAL ENGINEER
SOLOMON TADESSE
No. C62773
Exp. 06-30-18
CIVIL
STATE OF CALIFORNIA

THE STATE OF CALIFORNIA OR ITS OFFICERS OR AGENTS SHALL NOT BE RESPONSIBLE FOR THE ACCURACY OR COMPLETENESS OF SCANNED COPIES OF THIS PLAN SHEET.

NOTES:

1. FOR QUANTITY AND LOCATION OF DIKE TO BE REMOVED, SEE CURB & GUTTER REMOVAL SUMMARY OF QUANTITIES SHEET.

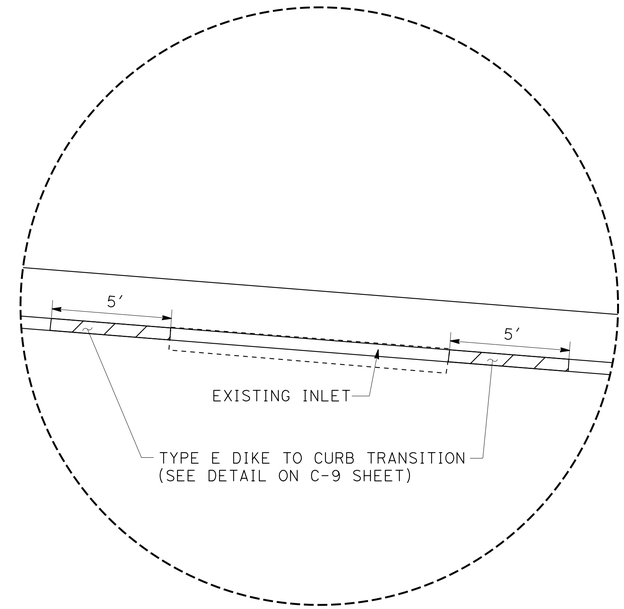

DETAIL 'A'

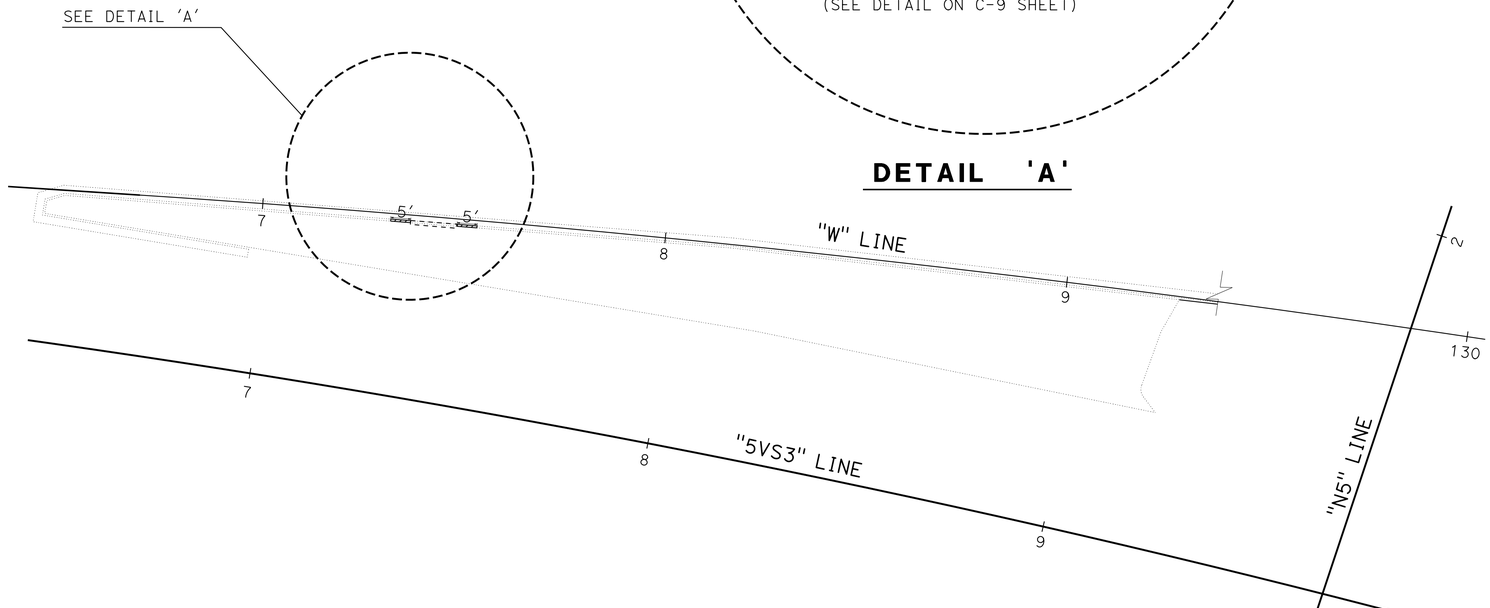

DIKE TRANSITION NEXT TO INLET

CONSTRUCTION DETAILS

NO SCALE

C-23

STATE OF CALIFORNIA - DEPARTMENT OF TRANSPORTATION
Caltrans® PROJECT DEVELOPMENT

FUNCTIONAL SUPERVISOR: KAZIM MAMDANI
CALCULATED-DESIGNED BY: ARY JAFF
CHECKED BY: SOLOMON TADESSE
REVISED BY
DATE REVISED

LAST REVISION 06-22-16 | DATE PLOTTED => 04-OCT-2016 | TIME PLOTTED => 11:29

Dist	COUNTY	ROUTE	POST MILES TOTAL PROJECT	SHEET No.	TOTAL SHEETS
11	SD	8	T0.5/R0.7	34	162

REGISTERED CIVIL ENGINEER 06-15-16 DATE

08-22-16
PLANS APPROVAL DATE

REGISTERED PROFESSIONAL ENGINEER SOLOMON TADESSE No. C62773 Exp. 06-30-18 CIVIL STATE OF CALIFORNIA

THE STATE OF CALIFORNIA OR ITS OFFICERS OR AGENTS SHALL NOT BE RESPONSIBLE FOR THE ACCURACY OR COMPLETENESS OF SCANNED COPIES OF THIS PLAN SHEET.

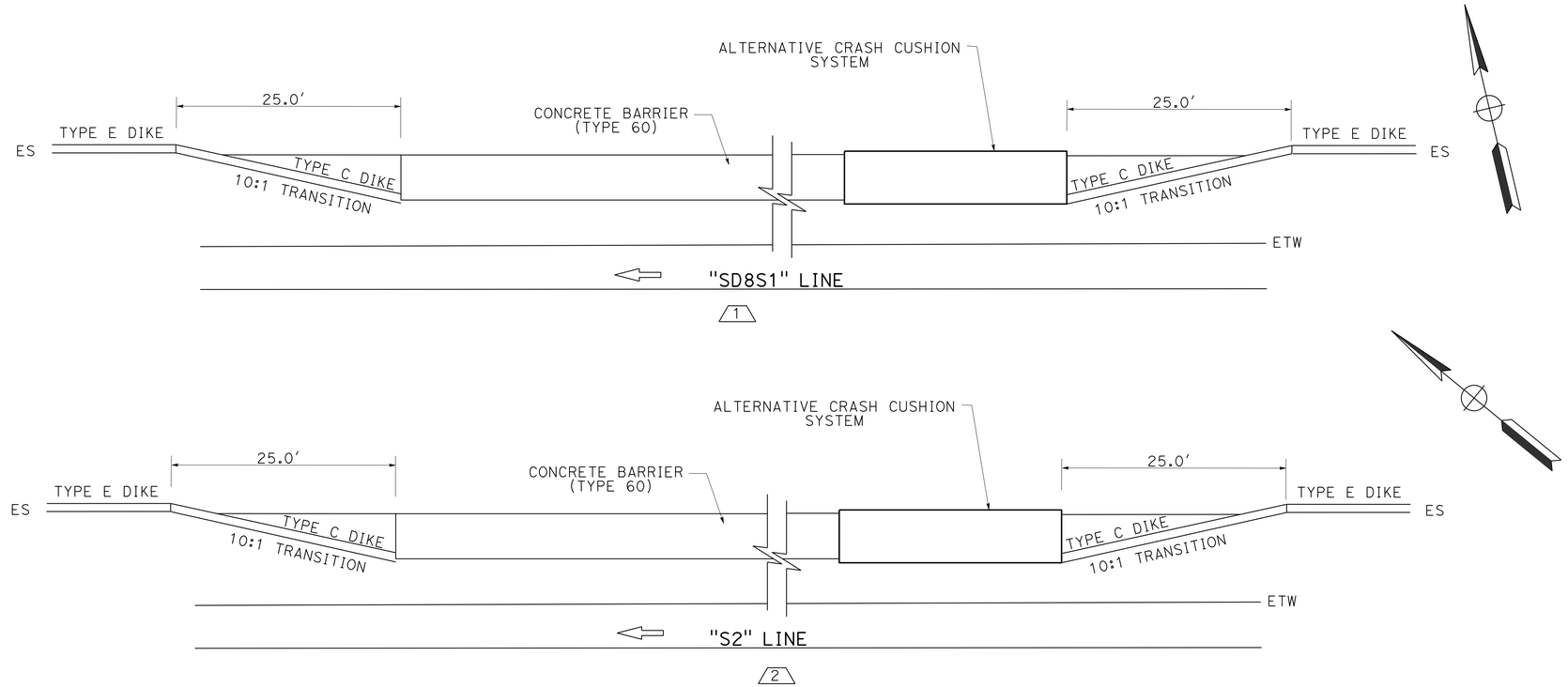

DIKE TRANSITION AT CONCRETE BARRIER

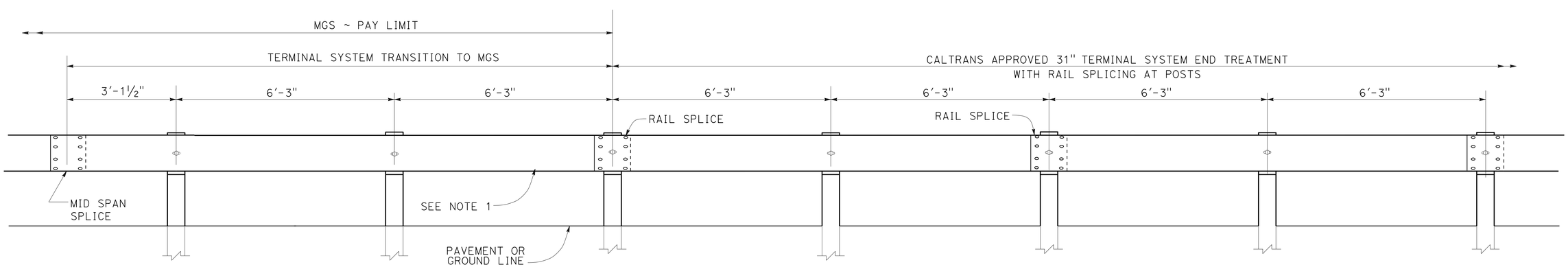

TRANSITION DETAIL FOR 31" TERMINAL SYSTEM END TREATMENT WITH RAIL SPLICING AT POSTS TO MIDWEST GUARDRAIL SYSTEM

NOTE:
1. USE 15'-7½" LENGTH RAIL.

CONSTRUCTION DETAILS

C-24

NO SCALE

STATE OF CALIFORNIA - DEPARTMENT OF TRANSPORTATION
Caltrans PROJECT DEVELOPMENT

FUNCTIONAL SUPERVISOR: KAZIM MAMDANI
CALCULATED-DESIGNED BY: JIM ALSHIEK
CHECKED BY: SOLOMON TADESSE
REVISED BY
DATE REVISED

LAST REVISION 05-26-16
DATE PLOTTED =>
TIME PLOTTED =>

Dist	COUNTY	ROUTE	POST MILES TOTAL PROJECT	SHEET No.	TOTAL SHEETS
11	SD	8	T0.5/R0.7	35	162

REGISTERED CIVIL ENGINEER 06-15-16 DATE

08-22-16
PLANS APPROVAL DATE

REGISTERED PROFESSIONAL ENGINEER SOLOMON TADESSE No. C62773 Exp. 06-30-18 CIVIL STATE OF CALIFORNIA

THE STATE OF CALIFORNIA OR ITS OFFICERS OR AGENTS SHALL NOT BE RESPONSIBLE FOR THE ACCURACY OR COMPLETENESS OF SCANNED COPIES OF THIS PLAN SHEET.

NOTES:

1. FOR DETAILS NOT SHOWN, SEE RSP A77U1, A77U2, A77U4.
2. TAPER THE TOP OF THE ANCHOR BLOCK AT 4:1 TO MATCH THE TOP ELEVATION OF THE TRANSITION RAILING (TYPE WB-31)
3. ALL PLATES AND BOLTS ARE GALVANIZED.
4. CUT AND REMOVE PORTION OF BARRIER RAILING TYPE 2 AND BAGR AS REQUIRED.

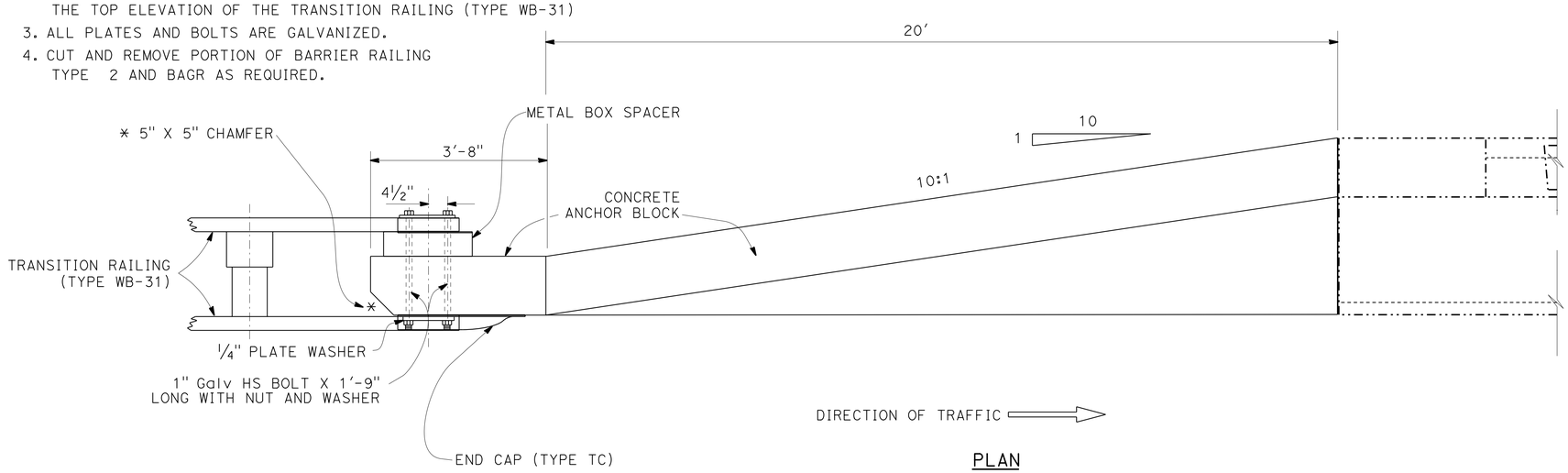

PLAN

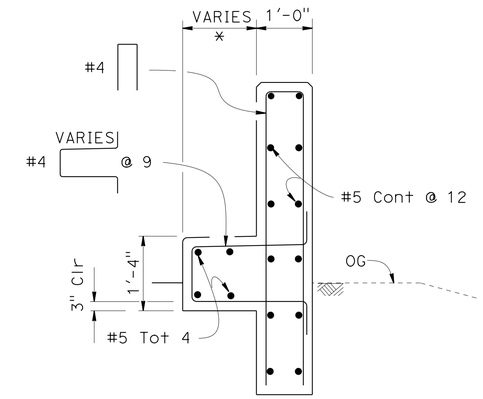

* VARIES FROM 2'-0" TO 0'-0"

SECTION B-B

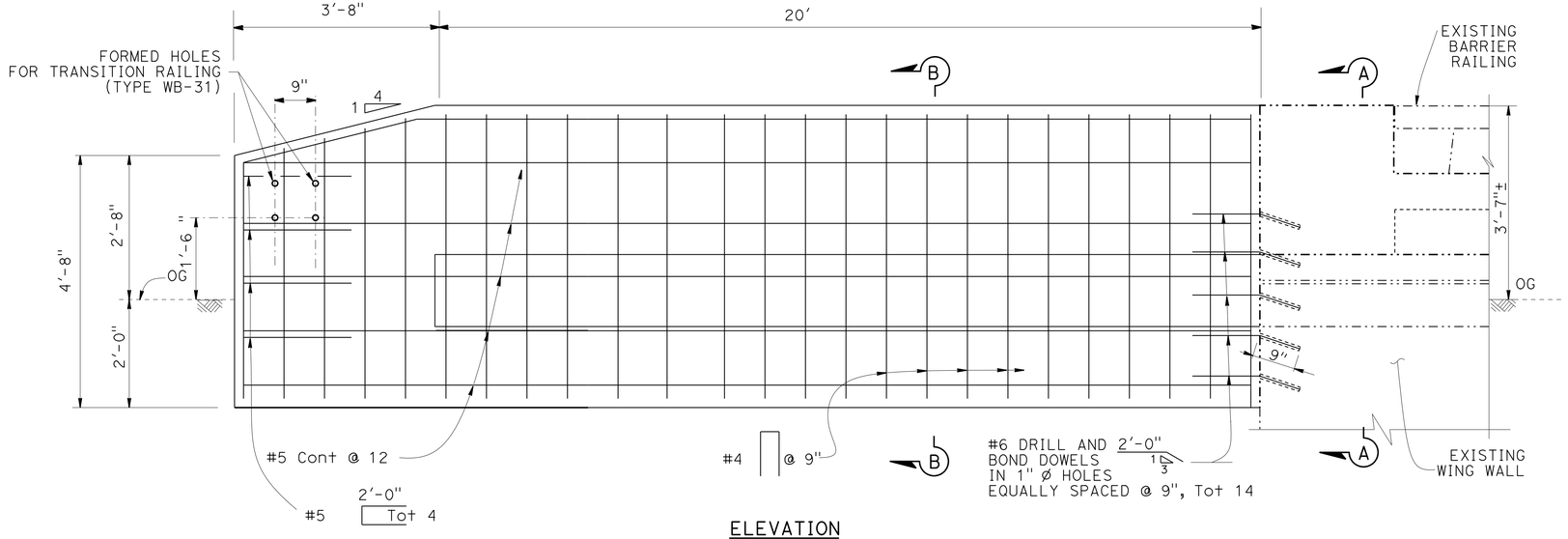

ELEVATION

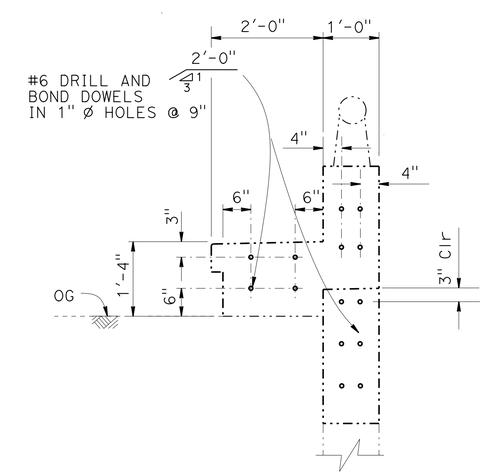

SECTION A-A

ANCHER BLOCK, TYPE 3

(TO BE INSTALLED WITH MGS No. 17)

CONSTRUCTION DETAILS

NO SCALE

C-25

STATE OF CALIFORNIA - DEPARTMENT OF TRANSPORTATION
Caltrans PROJECT DEVELOPMENT

FUNCTIONAL SUPERVISOR: KAZIM MAMDANI
CALCULATED-DESIGNED BY: ARY JAFF
CHECKED BY: SOLOMON TADESSE
REVISED BY / DATE REVISED

LAST REVISION 06-21-16
DATE PLOTTED => 04-OCT-2016
TIME PLOTTED => 11:29

Dist	COUNTY	ROUTE	POST MILES TOTAL PROJECT	SHEET No.	TOTAL SHEETS
11	SD	8	T0.5/R0.7	36	162

REGISTERED CIVIL ENGINEER DATE 06-15-16

PLANS APPROVAL DATE 08-22-16

REGISTERED PROFESSIONAL ENGINEER SOLOMON TADESSE No. C62773 Exp. 06-30-18 CIVIL STATE OF CALIFORNIA

THE STATE OF CALIFORNIA OR ITS OFFICERS OR AGENTS SHALL NOT BE RESPONSIBLE FOR THE ACCURACY OR COMPLETENESS OF SCANNED COPIES OF THIS PLAN SHEET.

NOTES:

1. FOR DETAILS NOT SHOWN, SEE RSP A77U1, A77U2, AND A77U4.
2. ALL PLATES AND BOLTS ARE GALVANIZED.

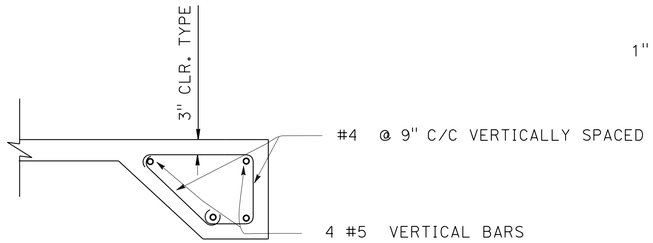

ADDITIONAL REBAR IN THE TAPERED SECTION

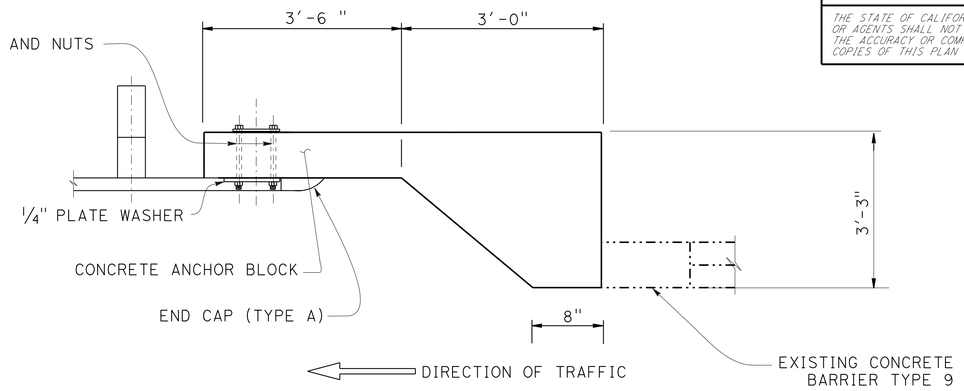

PLAN

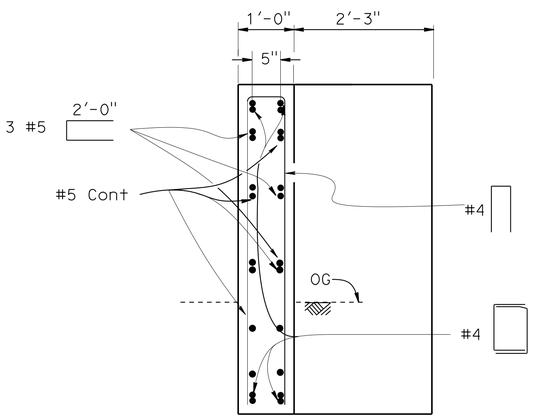

SECTION A-A

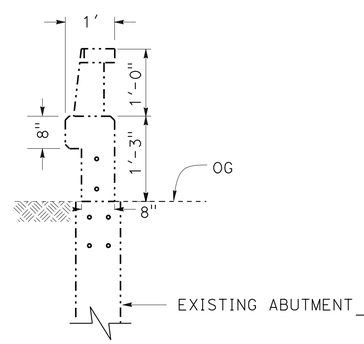

SECTION B-B
(CONCRETE BARRIER TYPE 9)

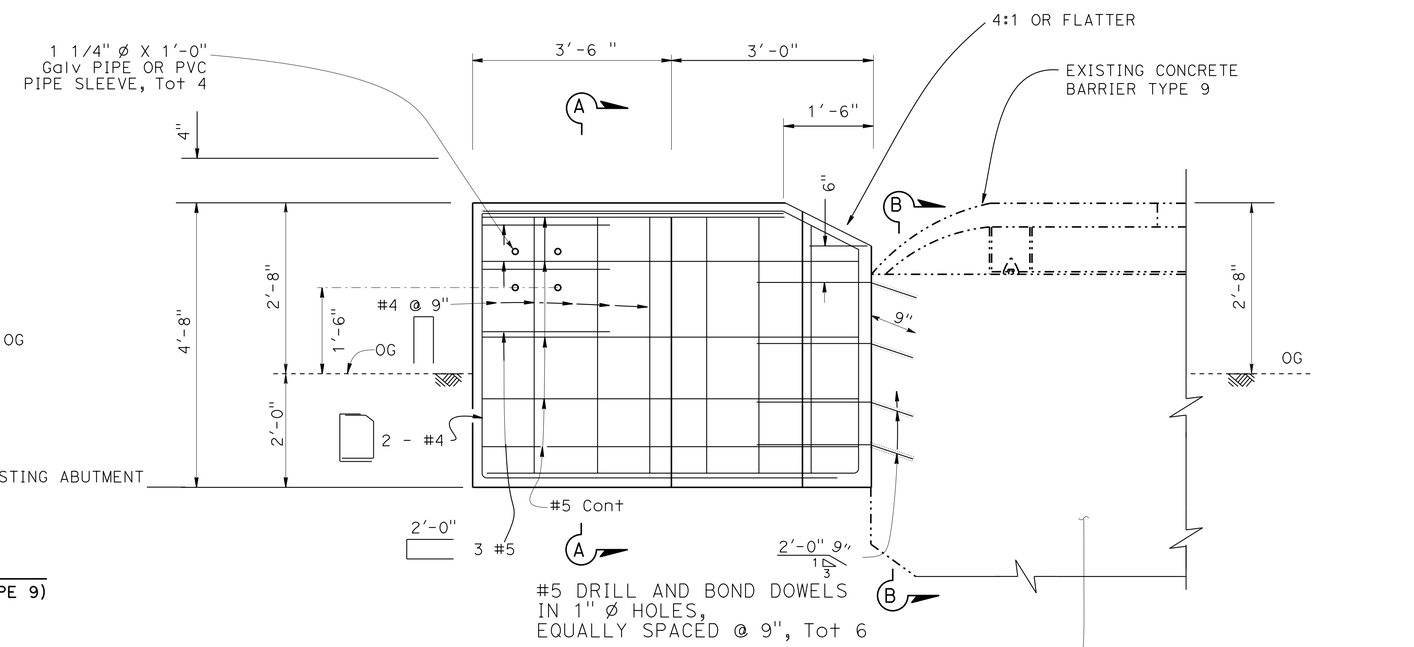

ELEVATION

ANCHOR BLOCK (TYPE 4)

(TO BE INSTALLED WITH MGS No 2)

CONSTRUCTION DETAILS

C-26

NO SCALE

STATE OF CALIFORNIA - DEPARTMENT OF TRANSPORTATION
Caltrans PROJECT DEVELOPMENT

FUNCTIONAL SUPERVISOR: KAZIM MAMDANI
CALCULATED-DESIGNED BY: JIM ALSHIEK
CHECKED BY: SOLOMON TADESSE
REVISED BY / DATE REVISED

LAST REVISION 06-21-16
DATE PLOTTED => 04-OCT-2016
TIME PLOTTED => 11:29

Dist	COUNTY	ROUTE	POST MILES TOTAL PROJECT	SHEET No.	TOTAL SHEETS
11	SD	8	T0.5/R0.7	37	162

REGISTERED CIVIL ENGINEER DATE 06-15-16

PLANS APPROVAL DATE 08-22-16

REGISTERED PROFESSIONAL ENGINEER SOLOMON TADESSE No. C62773 Exp. 06-30-18 CIVIL STATE OF CALIFORNIA

THE STATE OF CALIFORNIA OR ITS OFFICERS OR AGENTS SHALL NOT BE RESPONSIBLE FOR THE ACCURACY OR COMPLETENESS OF SCANNED COPIES OF THIS PLAN SHEET.

NOTES:

1 - ALL PLATES AND BOLTS ARE GALVANIZED.

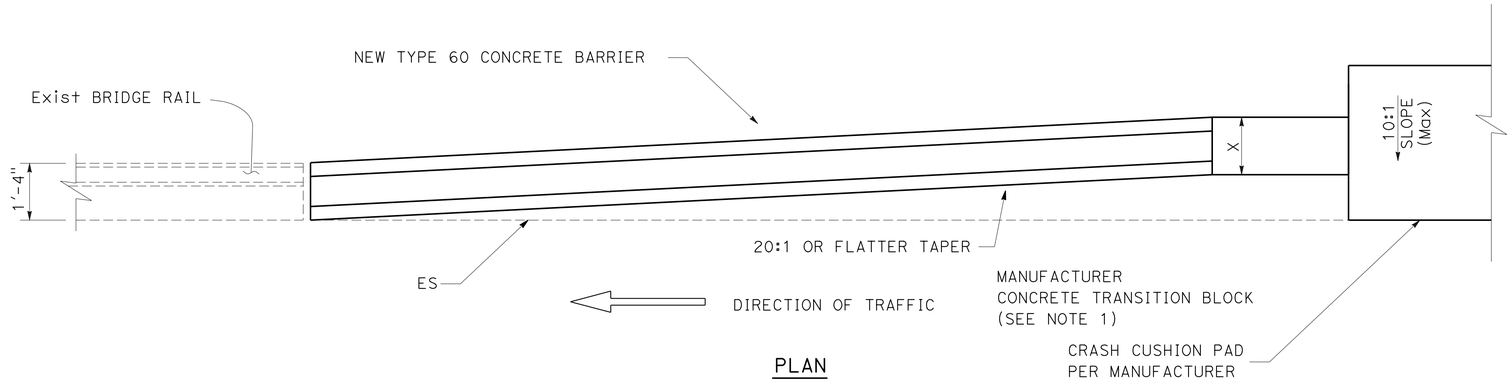

PLAN

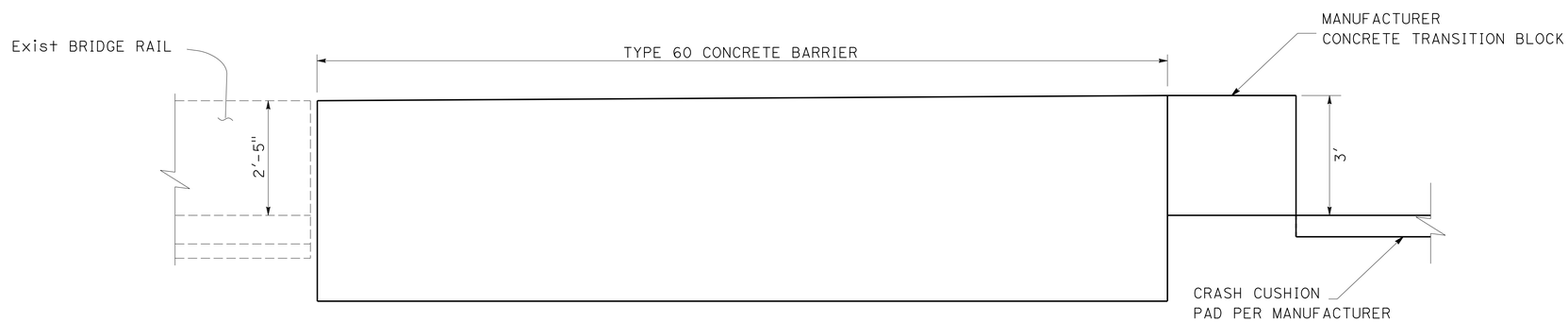

ELEVATION

CONCRETE BARRIER NEXT TO BRIDGE RAIL

CONSTRUCTION DETAILS

C-27

NO SCALE

STATE OF CALIFORNIA - DEPARTMENT OF TRANSPORTATION

Caltrans® PROJECT DEVELOPMENT

FUNCTIONAL SUPERVISOR: KAZIM MAMDANI

CALCULATED-DESIGNED BY: JIM ALSHIEK

CHECKED BY: SOLOMON TADESSE

REVISED BY | DATE REVISED

LAST REVISION 06-21-16 | DATE PLOTTED => | TIME PLOTTED =>

Dist	COUNTY	ROUTE	POST MILES TOTAL PROJECT	SHEET No.	TOTAL SHEETS
11	SD	8	T0.5/R0.7	38	162

REGISTERED CIVIL ENGINEER 06-15-16 DATE

08-22-16
PLANS APPROVAL DATE

REGISTERED PROFESSIONAL ENGINEER SOLOMON TADESSE No. C62773 Exp. 06-30-18 CIVIL STATE OF CALIFORNIA

THE STATE OF CALIFORNIA OR ITS OFFICERS OR AGENTS SHALL NOT BE RESPONSIBLE FOR THE ACCURACY OR COMPLETENESS OF SCANNED COPIES OF THIS PLAN SHEET.

NOTES:

1. FOR DETAILS NOT SHOWN, SEE RSP A77U1, A77U2, AND A77U4.
2. TAPER THE TOP OF THE ANCHOR BLOCK AT 4:1 TO MATCH THE TOP ELEVATION OF THE TRANSITION RAILING (TYPE WB-31).
3. ALL PLATES AND BOLTS ARE GALVANIZED.

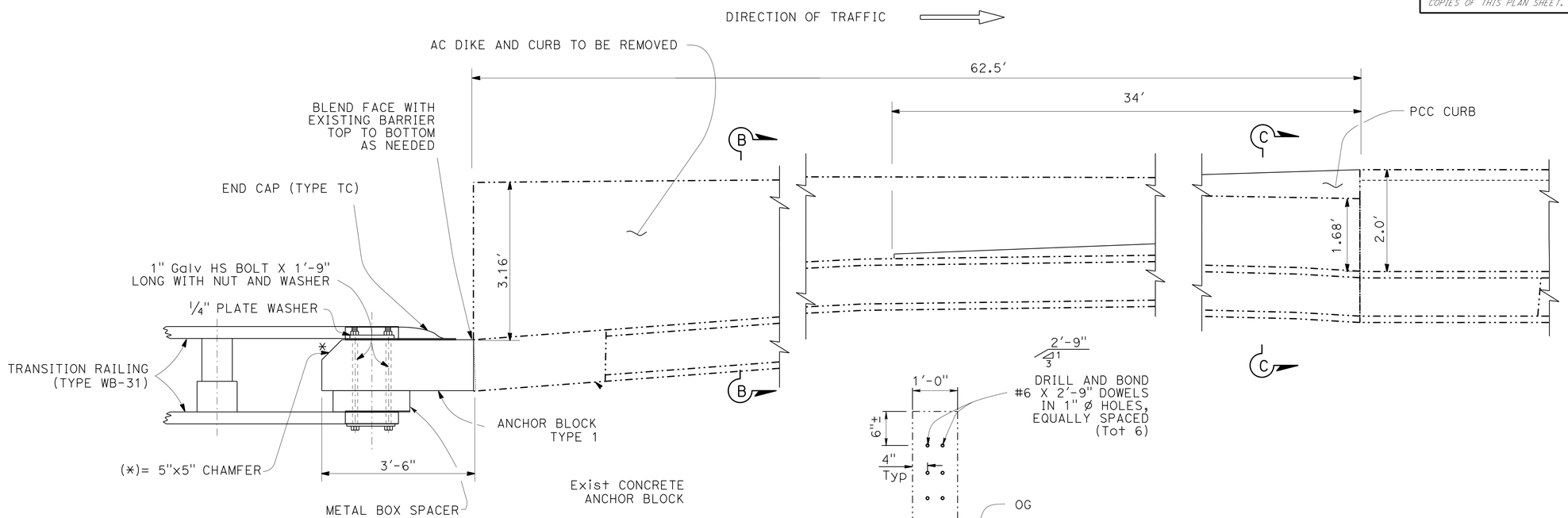

SECTION D-D

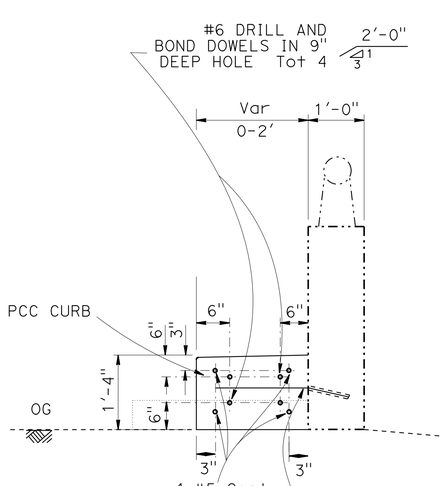

SECTION C-C

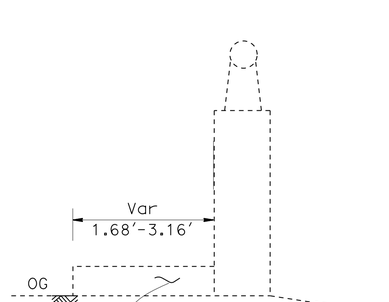

SECTION B-B

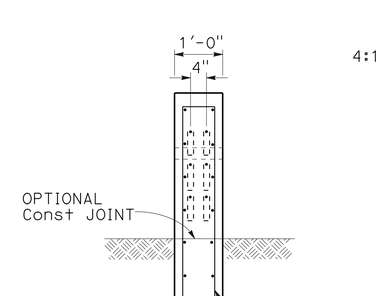

SECTION A-A

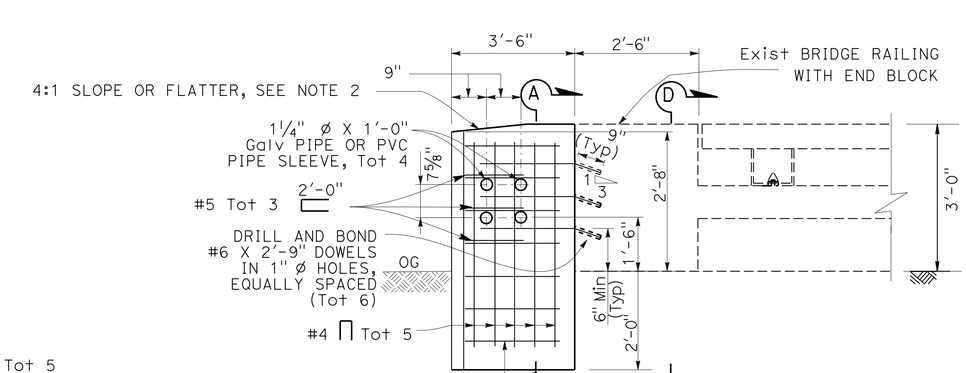

ELEVATION

ANCHOR BLOCK (TYPE 1A)

(TO BE INSTALLED WITH MGS No 5)

CONSTRUCTION DETAILS

NO SCALE

C-28

STATE OF CALIFORNIA - DEPARTMENT OF TRANSPORTATION
Caltrans PROJECT DEVELOPMENT

FUNCTIONAL SUPERVISOR: KAZIM MAMDANI
CALCULATED-DESIGNED BY: ARY JAFF
CHECKED BY: SOLOMON TADESSE
REVISED BY
DATE REVISED

LAST REVISION 06-21-16
DATE PLOTTED => 04-OCT-2016
TIME PLOTTED => 11:29

Dist	COUNTY	ROUTE	POST MILES TOTAL PROJECT	SHEET No.	TOTAL SHEETS
11	SD	8	T0.5/R0.7	39	162

REGISTERED CIVIL ENGINEER 06-15-16 DATE

08-22-16
PLANS APPROVAL DATE

REGISTERED PROFESSIONAL ENGINEER
SOLOMON TADESSE
No. C62773
Exp. 06-30-18
CIVIL
STATE OF CALIFORNIA

THE STATE OF CALIFORNIA OR ITS OFFICERS OR AGENTS SHALL NOT BE RESPONSIBLE FOR THE ACCURACY OR COMPLETENESS OF SCANNED COPIES OF THIS PLAN SHEET.

NOTES:

1. THE CONTRACTOR SHALL VERIFY ALL CONTROLLING FIELD DIMENSIONS BEFORE ORDERING OR FABRICATING ANY MATERIAL.

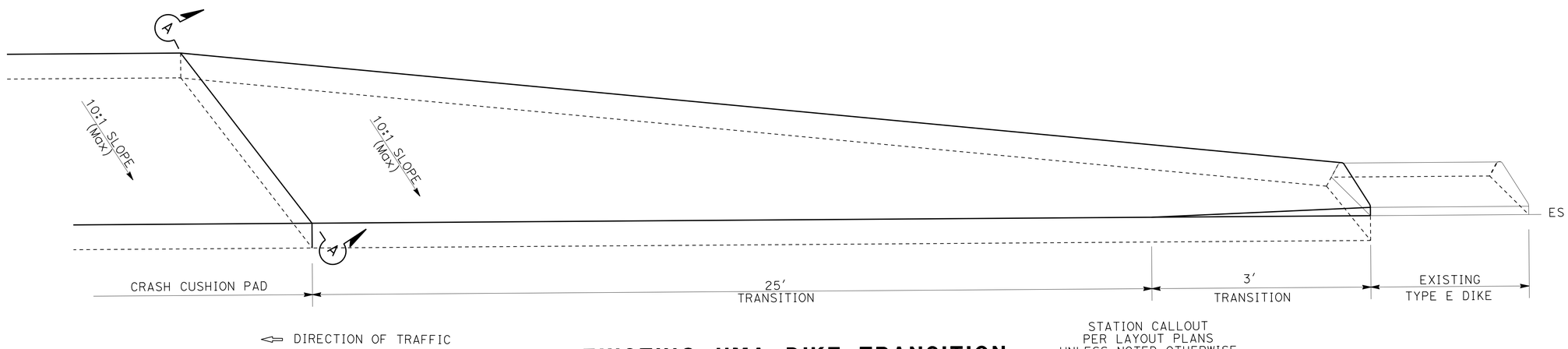

EXISTING HMA DIKE TRANSITION TYPE E TO CRASH CUSHION PAD

LOCATIONS 4 & 5

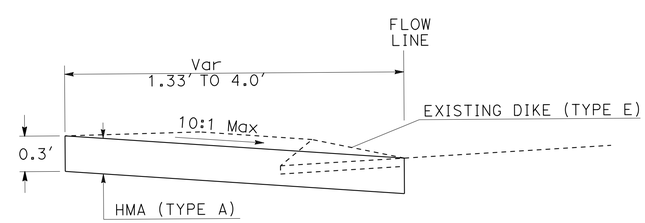

SECTION A-A

CONSTRUCTION DETAILS

NO SCALE

C-29

STATE OF CALIFORNIA - DEPARTMENT OF TRANSPORTATION
Caltrans PROJECT DEVELOPMENT

FUNCTIONAL SUPERVISOR: KAZIM MAMDANI
CALCULATED-DESIGNED BY: ARY JAFF
CHECKED BY: SOLOMON TADESSE
REVISED BY
DATE REVISED

LAST REVISION 06-21-16
DATE PLOTTED => 04-OCT-2016
TIME PLOTTED => 11:29

Dist	COUNTY	ROUTE	POST MILES TOTAL PROJECT	SHEET No.	TOTAL SHEETS
11	SD	8	T0.5/R0.7	40	162

REGISTERED CIVIL ENGINEER 06-15-16 DATE

08-22-16
PLANS APPROVAL DATE

REGISTERED PROFESSIONAL ENGINEER
SOLOMON TADESSE
No. C62773
Exp. 06-30-18
CIVIL
STATE OF CALIFORNIA

THE STATE OF CALIFORNIA OR ITS OFFICERS OR AGENTS SHALL NOT BE RESPONSIBLE FOR THE ACCURACY OR COMPLETENESS OF SCANNED COPIES OF THIS PLAN SHEET.

NOTES:

1. SEE MANUFACTURER'S PRODUCT DETAIL FOR MORE INFORMATION.
2. 4 INCH IN-LANE RUMBLE BAR.
3. PLACE 3 FEET GAP IN THE MIDDLE AND 1.5 FEET ON EACH EDGE FOR EACH LANE. FOR ANY LANES WITH THE WIDTH GREATER THAN 12 FEET, EXTEND THE RUMBLE BARS TO MEET GAP DISTANCE IN THE MIDDLE.
4. DIRECTION OF ADJACENT TRAFFIC INDICATED BY ⇨ .

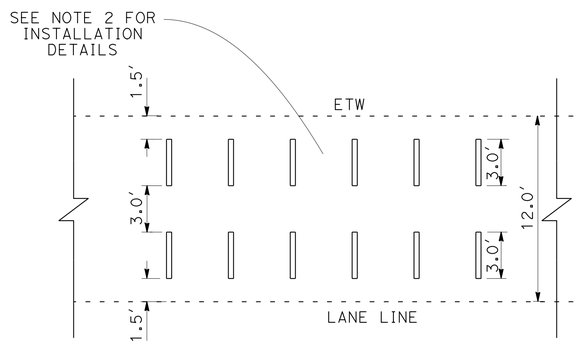

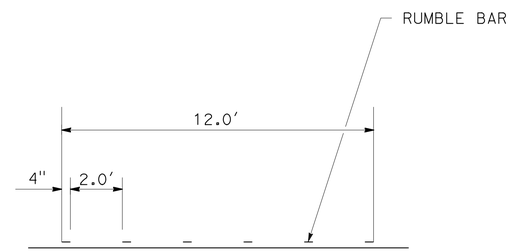

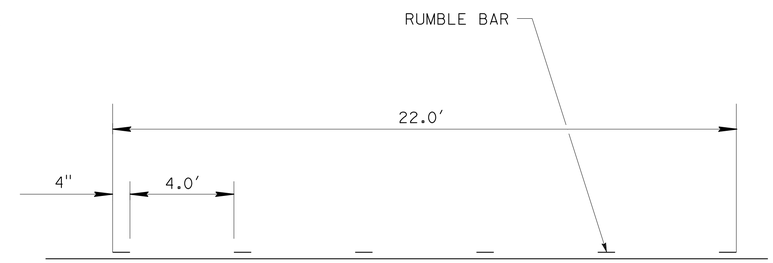

PLAN VIEW - RUMBLE BARS INSTALLATION FOR EACH LANE

SECTION A-A

SECTION B-B

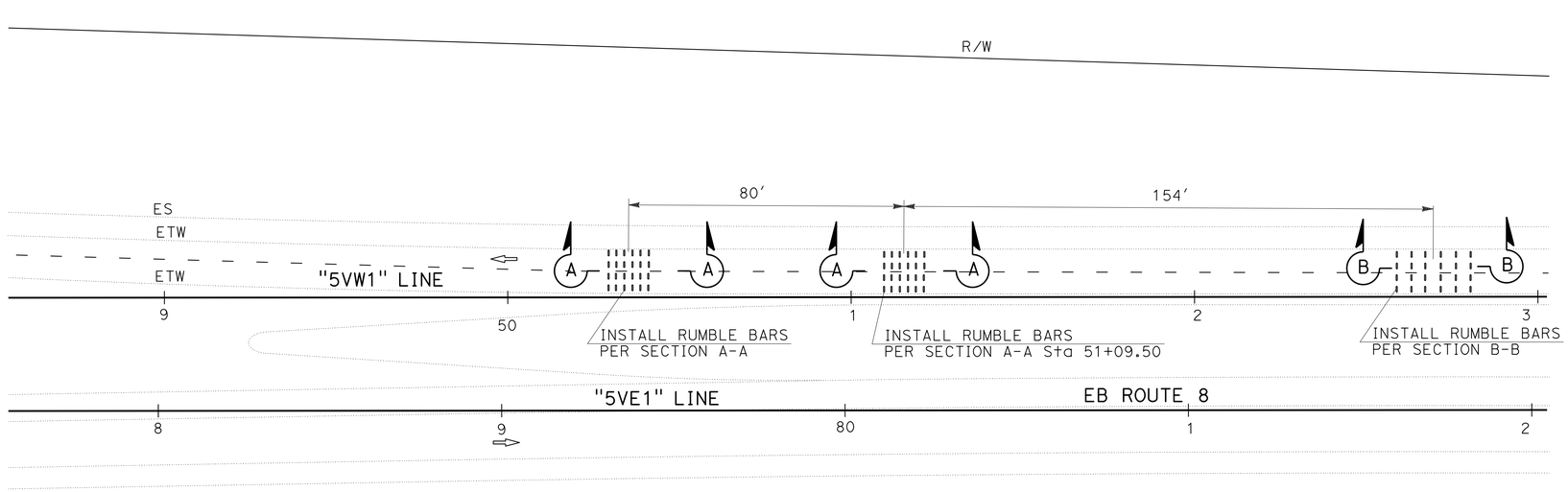

W50 (MOD) (CA)

CONSTRUCTION DETAILS

NO SCALE

C-30

STATE OF CALIFORNIA - DEPARTMENT OF TRANSPORTATION
Caltrans® PROJECT DEVELOPMENT

FUNCTIONAL SUPERVISOR: KAZIM MAMDANI
CALCULATED-DESIGNED BY: JIM ALSHIEK
CHECKED BY: SOLOMON TADESSE
REVISED BY
DATE REVISED

LAST REVISION 06-21-16
DATE PLOTTED =>
TIME PLOTTED =>

Dist	COUNTY	ROUTE	POST MILES TOTAL PROJECT	SHEET No.	TOTAL SHEETS
11	SD	8	T0.5/R0.7	41	162

REGISTERED CIVIL ENGINEER 06-15-16 DATE

08-22-16
PLANS APPROVAL DATE

REGISTERED PROFESSIONAL ENGINEER SOLOMON TADESSE No. C62773 Exp. 06-30-18 CIVIL STATE OF CALIFORNIA

THE STATE OF CALIFORNIA OR ITS OFFICERS OR AGENTS SHALL NOT BE RESPONSIBLE FOR THE ACCURACY OR COMPLETENESS OF SCANNED COPIES OF THIS PLAN SHEET.

TEMPORARY WATER POLLUTION CONTROL

LINE	DIRECTION	STATION	DESCRIPTION	TEMPORARY DRAINAGE INLET PROTECTION
				EA
"S34"	NB NIMITZ Blvd ON-RAMP TO EB 8	31+58.25	35.00' R+ DRCL-S33	1
"M5"	SB MIDWAY Dr ON-RAMP TO EB 8	66+00.00	32.40' R+ "DRCL-M5"	1
"M1AAB1"	NB MIDWAY Dr ON-RAMP TO EB 8	78+08.50	22.35' L+ "DRCL-M1AAB1"	1
"M1AAB1"	NB MIDWAY Dr ON-RAMP TO EB 8	78+15.50	30.72' R+ "DRCL-M1AAB1"	1
"M1AAB1"	NB MIDWAY Dr ON-RAMP TO EB 8	78+17.25	35.20' R+ "DRCL-M1AAB1"	1
"5VE1"	EB 8	122+22.00	17.50' L+ "DCL-5VE1"	1
"5VE1"	EB 8	126+65.6	15.25' L+ "DCL-5VE1"	1
"5VE1"	EB 8	131+86.50	13.50' L+ "DCL-5VE1"	1
"5VE1"	EB-8	133+85.45	13.00' L+ "DCL-5VE1"	3
"5VE1"	EB-8	151+36.00	21.00' L+ "DCL-5VE1"	1
"5VE1"	EB-8	151+36.00	42.00' R+ "DCL-5VE1"	1
"5VE1"	EB-8	151+86.50	41.70' R+ "DCL-5VE1"	1
"5VE1"	EB-8	152+37.40	41.60' R+ "DCL-5VE1"	1
"SD8S1"	EB-8 TO SB 5	132+41.35	37.90' R+ "DRCL-SD8S1"	1
"5VE1"	EB-8	159+61.15	1.75' L+ "DCL-5VE1"	1
"5VE1"	EB-8	160+11.60	1.80' L+ "DCL-5VE1"	1
"5VE1"	EB-8	160+63.00	1.60' L+ "DCL-5VE1"	1
11SD8"	EB-8	148+07.00	55.50' R+ "DCL-11SD8"	1
"11SD8"	EB-8	148+57.25	55.30' R+ "DCL-11SD8"	1
"11SD8"	EB-8	149+09.00	55.50' R+ "DCL-11SD8"	1
"M3"	SB MORENA Blvd ON-RAMP TO EB 8	144+60.00	22.90' R+ "DRCL-M3"	1
"5M1"	EB 8 OFF-RAMP TO NB MORENA Blvd	29+28.70	2.65' R+ "DFCL-5M1"	1
"11SD8"	EB-8	157+92.40	68.25' R+ "DCL-11SD8"	1
"11SD8"	EB-8	158+19.30	68.85' R+ "DCL-11SD8"	1
"11SD8"	EB-8	167+41.80	72.40' R+ "DCL-11SD8"	1
"5W1"	WB-8	83+39.50	45.75' L+ "DCL-5W1"	1
"5VS3"	WB-8	124+26.70	3.00' R+ "DRCL-5VS3"	1
"5VS3"	WB-8	125+51.70	3.00' R+ "DRCL-5VS3"	1
"5VS3"	WB-8	127+51.54	3.45' R+ "DRCL-5VS3"	1
"5VS3"	WB-8	127+55.00	0' "DRCL-5VS3"	3
"5VS3"	WB 8	131+00.00	2' R+ "DCL-5VS3"	3
"11SD8"	WB 8	167+39.50	3.30' L+ "DCL-11SD8"	1
"11SD8"	WB 8	167+43.70	3.30' L+ "DCL-11SD8"	1
"11SD8"	WB 8	168+33.70	3.30' L+ "DCL-11SD8"	1
"11SD8"	WB 8	169+02.00	3.30' L+ "DCL-11SD8"	1
"11SD8"	WB 8	169+39.25	3.00' R+ "DCL-11SD8"	1
"11SD8"	WB 8	170+95.00	3.30' R+ "DCL-11SD8"	1
"11SD8"	WB 8	172+81.00	1.50' R+ "DCL-11SD8"	1
"11SD8"	WB 8	175+09.00	3.00' R+ "DCL-11SD8"	1
"11SD8"	WB 8	177+36.00	1.50' R+ "DCL-11SD8"	1
"11SD8"	WB 8	179+72.00	1.50' R+ "DCL-11SD8"	1
"11SD8"	WB 8	182+08.50	1.50' R+ "DCL-11SD8"	1
"11SD8"	WB 8	182+47.50	1.50' R+ "DCL-11SD8"	1
"11SD8"	WB 8	183+79.00	10' L+ "DCL-11SD8"	1
			TOTAL	50

TEMPORARY WATER POLLUTION CONTROL QUANTITIES WPCQ-1

STATE OF CALIFORNIA - DEPARTMENT OF TRANSPORTATION
Caltrans DESIGN

FUNCTIONAL SUPERVISOR: KAZIM MAMDANI
CALCULATED-DESIGNED BY: DEVANGI DAVE
CHECKED BY: SOLOMON TADESSE
REVISED BY
DATE REVISED

LAST REVISION 06-21-16 | DATE PLOTTED => 04-OCT-2016 | TIME PLOTTED => 11:29

Dist	COUNTY	ROUTE	POST MILES TOTAL PROJECT	SHEET No.	TOTAL SHEETS
11	SD	8	T0.5/R0.7	42	162

06-15-16
REGISTERED CIVIL ENGINEER DATE

08-22-16
PLANS APPROVAL DATE

REGISTERED PROFESSIONAL ENGINEER
SHAHIN T. ADIBI
No. 54839
Exp. 06-30-18
CIVIL
STATE OF CALIFORNIA

THE STATE OF CALIFORNIA OR ITS OFFICERS OR AGENTS SHALL NOT BE RESPONSIBLE FOR THE ACCURACY OR COMPLETENESS OF SCANNED COPIES OF THIS PLAN SHEET.

NOTES:

1. EXACT LOCATION OF CONSTRUCTION AREA SIGNS WILL BE DETERMINED BY THE ENGINEER.
2. FEDERAL MANUAL ON UNIFORM TRAFFIC CONTROL DEVICES (MUTCD) SIGN CODES ARE SHOWN UNLESS DESIGNATED BY (CA), INDICATING CALIFORNIA MUTCD.
3. EXISTING UTILITIES ARE NOT SHOWN ON THESE PLAN SHEETS. THE CONTRACTOR SHALL VERIFY LOCATIONS OF EXISTING UTILITIES AND ADJUST THE FIELD LOCATION OF THE SIGN POSTS IN CONSULTATION WITH THE ENGINEER.
4. SEE TRAFFIC HANDLING PLAN FOR ADDITIONAL CONSTRUCTION AREA SIGNS.

LEGEND:

(X) = CONSTRUCTION AREA SIGN

CONSTRUCTION AREA SIGNS

SIGN No.	TYPE	PANEL SIZE (INCHES)	No. OF POST AND SIZE (INCHES)	No. OF SIGNS
1	C40 (CA)	108 X 42	2-4 X 6 (S)	4
2	W20-1	48 X 48	1-4 X 6 (S)	12
3	G20-2	48 X 24	1-4 X 4 (S)	13
4	SC6-4 (CA)	48 X 60	1-6 X 6 (S)	11

(S) DENOTES STATIONARY MOUNTED SIGN
SEE SCQ AND TH SHEETS FOR ADDITIONAL CONSTRUCTION AREA SIGNS.

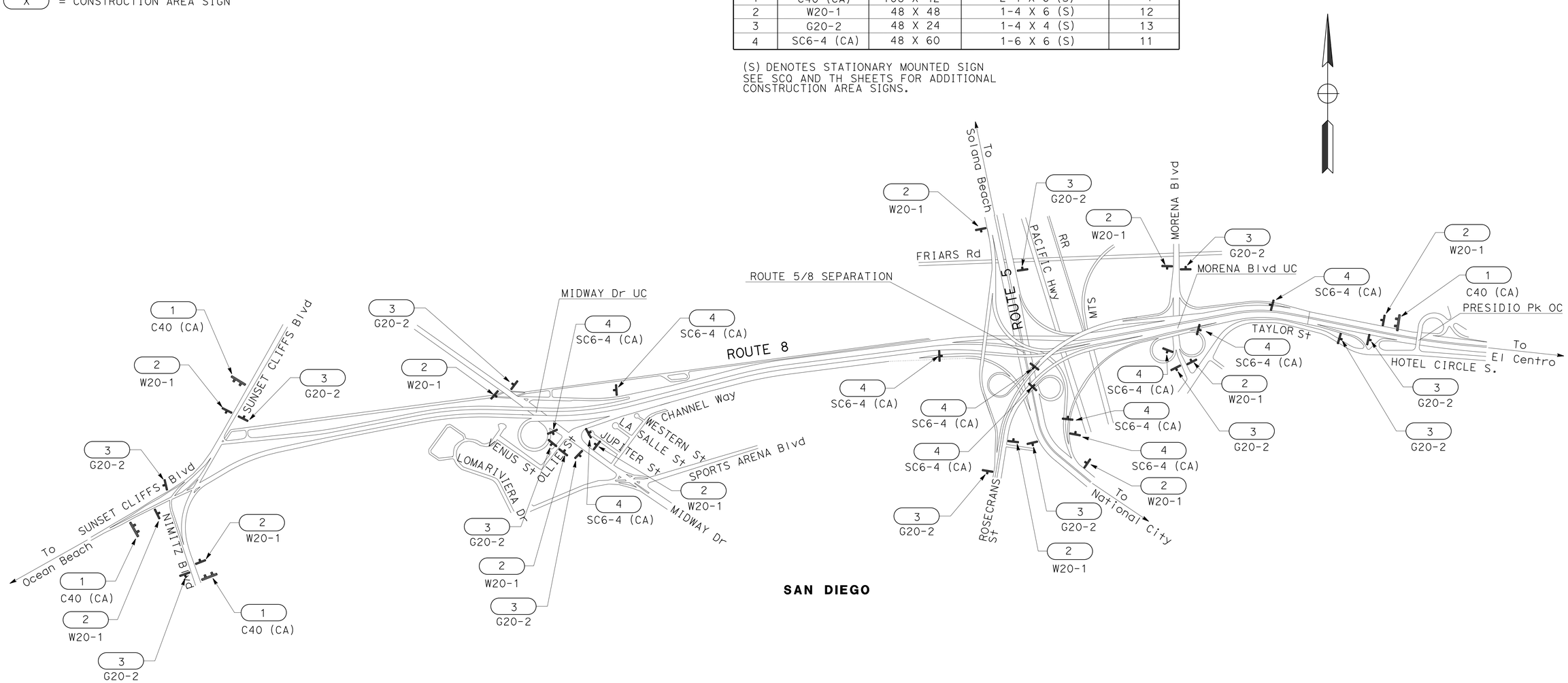

APPROVED FOR CONSTRUCTION AREA SIGN WORK ONLY

CONSTRUCTION AREA SIGNS

NO SCALE

CS-1

STATE OF CALIFORNIA - DEPARTMENT OF TRANSPORTATION
Caltrans
TRAFFIC DESIGN

FUNCTIONAL SUPERVISOR: CAMILLE ABOU FADEL
CALCULATED-DESIGNED BY: ROBERT EDEJER
CHECKED BY: SHAHIN ADIBI
REVISED BY
DATE REVISED

LAST REVISION 06-21-16
DATE PLOTTED => 04-OCT-2016
TIME PLOTTED => 11:29

Dist	COUNTY	ROUTE	POST MILES TOTAL PROJECT	SHEET No.	TOTAL SHEETS
11	SD	8	T0.5/R0.7	43	162

REGISTERED CIVIL ENGINEER 06-15-16 DATE

08-22-16
PLANS APPROVAL DATE

REGISTERED PROFESSIONAL ENGINEER
SHAHIN T. ADIBI
No. 54839
Exp. 06-30-18
CIVIL
STATE OF CALIFORNIA

THE STATE OF CALIFORNIA OR ITS OFFICERS OR AGENTS SHALL NOT BE RESPONSIBLE FOR THE ACCURACY OR COMPLETENESS OF SCANNED COPIES OF THIS PLAN SHEET.

NOTES:

1. EXACT LOCATION OF CONSTRUCTION AREA SIGNS WILL BE DETERMINED BY THE ENGINEER.
2. FEDERAL MANUAL ON UNIFORM TRAFFIC CONTROL DEVICES (MUTCD) SIGN CODES ARE SHOWN UNLESS DESIGNATED BY (CA), INDICATING CALIFORNIA MUTCD.
3. EXISTING UTILITIES ARE NOT SHOWN ON THESE PLAN SHEETS. THE CONTRACTOR SHALL VERIFY LOCATIONS OF EXISTING UTILITIES AND ADJUST THE FIELD LOCATION OF THE SIGN POSTS IN CONSULTATION WITH THE ENGINEER.
4. SEE CONSTRUCTION AREA SIGN PLAN FOR ADDITIONAL CONSTRUCTION AREA SIGNS.
5. ROTATE ARROW ON SC9 (CA) PANEL TO REFLECT DIRECTION OF DETOUR.

LEGEND:

(X) = CONSTRUCTION AREA SIGN
⇨ = DETOUR DIRECTION OF TRAFFIC
SPCL = SPECIAL CONSTRUCTION AREA SIGN
Caps = CAPITAL LETTERING
WORK AREA
BT (XX) BEGIN TEMPORARY TRAFFIC STRIPE
ET (XX) END TEMPORARY TRAFFIC STRIPE
BR (X) BEGIN REMOVE TRAFFIC STRIPE
ER (X) END REMOVE TRAFFIC STRIPE
Temp CRASH CUSHION ARRAY "U14"/"TU21"

TYPICAL PLACEMENT OF TRAFFIC PLASTIC DRUM

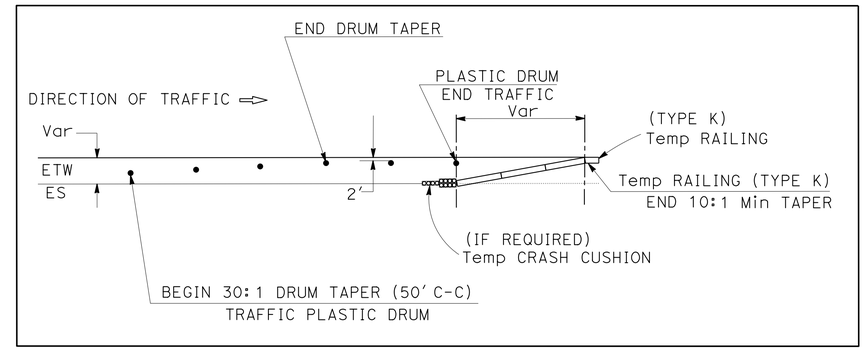

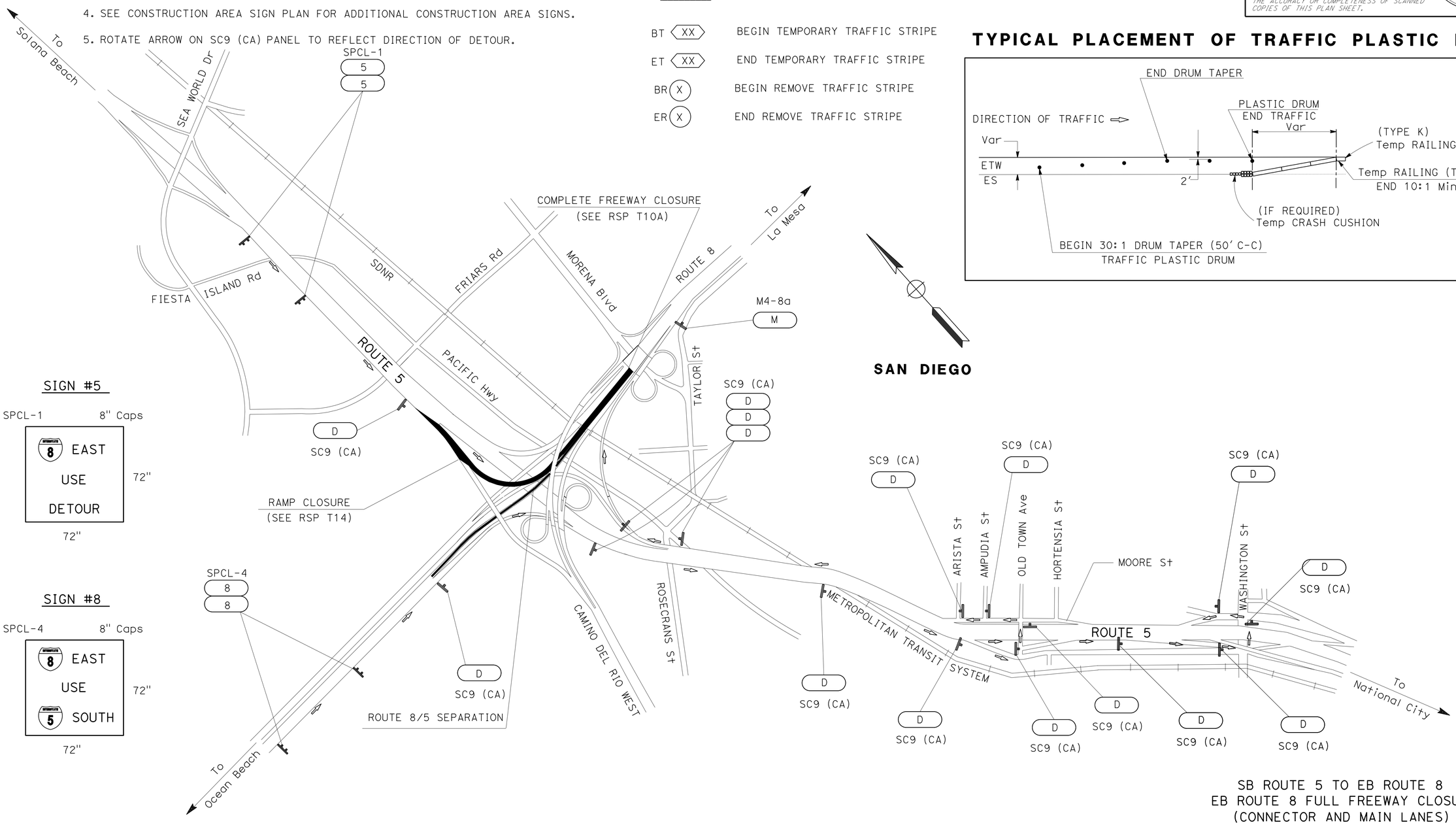

SIGN #5

SPCL-1 8" Caps

8 EAST
USE
DETOUR

72" 72"

SIGN #8

SPCL-4 8" Caps

8 EAST
USE
5 SOUTH

72" 72"

SB ROUTE 5 TO EB ROUTE 8
EB ROUTE 8 FULL FREEWAY CLOSURE
(CONNECTOR AND MAIN LANES)

TRAFFIC HANDLING PLAN

APPROVED FOR TRAFFIC HANDLING WORK ONLY

NO SCALE

TH-1

STATE OF CALIFORNIA - DEPARTMENT OF TRANSPORTATION
Caltrans
TRAFFIC DESIGN

FUNCTIONAL SUPERVISOR: CAMILLE ABOU FADEL
CALCULATED-DESIGNED BY: PARVIS NAHAVANDIAN
CHECKED BY: SHAHIN ADIBI
REVISED BY
DATE REVISED

LAST REVISION 06-16-16
DATE PLOTTED => 04-OCT-2016
TIME PLOTTED => 11:29

Dist	COUNTY	ROUTE	POST MILES TOTAL PROJECT	SHEET No.	TOTAL SHEETS
11	SD	8	T0.5/R0.7	44	162

REGISTERED CIVIL ENGINEER 06-15-16 DATE

08-22-16
PLANS APPROVAL DATE

REGISTERED PROFESSIONAL ENGINEER
SHAHIN T. ADIBI
No. 54839
Exp. 06-30-18
CIVIL
STATE OF CALIFORNIA

THE STATE OF CALIFORNIA OR ITS OFFICERS OR AGENTS SHALL NOT BE RESPONSIBLE FOR THE ACCURACY OR COMPLETENESS OF SCANNED COPIES OF THIS PLAN SHEET.

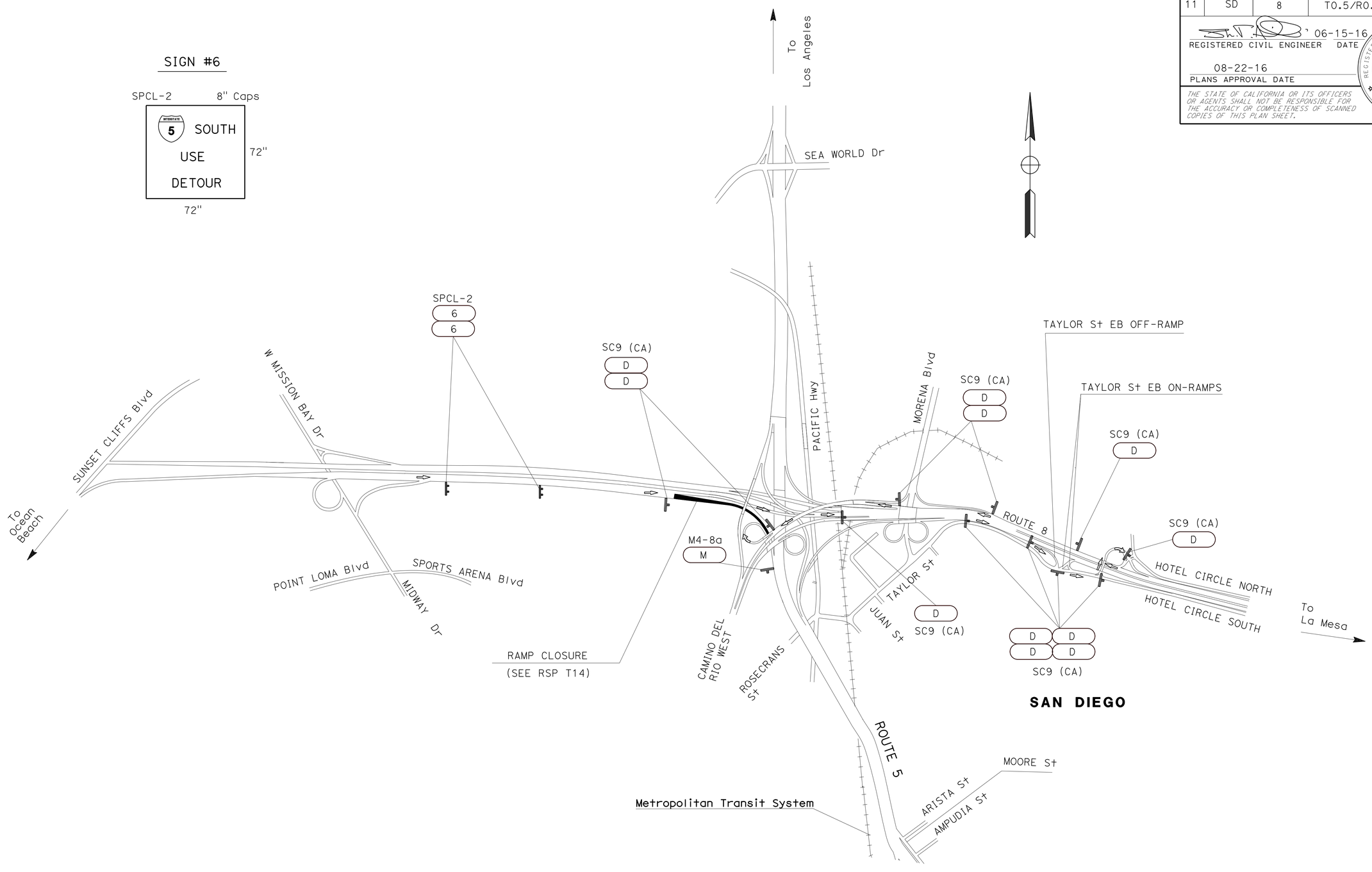

EB ROUTE 8 TO SB ROUTE 5

TRAFFIC HANDLING PLAN

APPROVED FOR TRAFFIC HANDLING WORK ONLY

NO SCALE

TH-2

STATE OF CALIFORNIA - DEPARTMENT OF TRANSPORTATION
Caltrans® **TRAFFIC DESIGN**

FUNCTIONAL SUPERVISOR: CAMILLE ABOU FADEL

CALCULATED-DESIGNED BY: ROBERT EDEJER
CHECKED BY: SHAHIN ADIBI

REVISED BY
DATE REVISED

LAST REVISION 06-21-16 | DATE PLOTTED => 04-OCT-2016 | TIME PLOTTED => 11:29

Dist	COUNTY	ROUTE	POST MILES TOTAL PROJECT	SHEET No.	TOTAL SHEETS
11	SD	8	T0.5/R0.7	45	162

REGISTERED CIVIL ENGINEER 06-15-16 DATE

08-22-16
PLANS APPROVAL DATE

REGISTERED PROFESSIONAL ENGINEER
SHAHIN T. ADIBI
No. 54839
Exp. 06-30-18
CIVIL
STATE OF CALIFORNIA

THE STATE OF CALIFORNIA OR ITS OFFICERS OR AGENTS SHALL NOT BE RESPONSIBLE FOR THE ACCURACY OR COMPLETENESS OF SCANNED COPIES OF THIS PLAN SHEET.

SIGN #5

SPCL-1 8" Caps

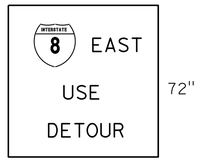

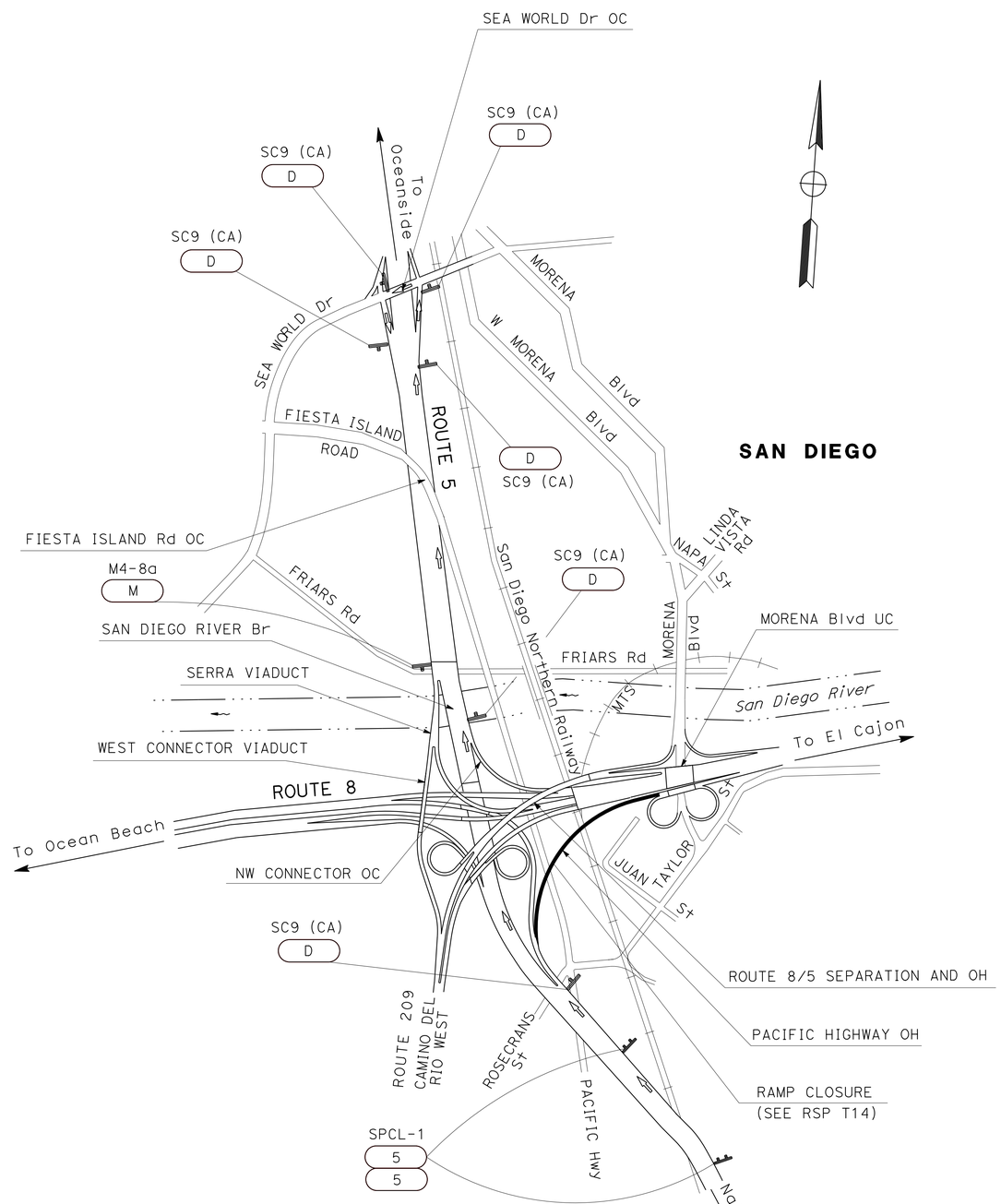

APPROVED FOR TRAFFIC HANDLING WORK ONLY

NB ROUTE 5 TO EB ROUTE 8

TRAFFIC HANDLING PLAN

NO SCALE

TH-3

STATE OF CALIFORNIA - DEPARTMENT OF TRANSPORTATION
Caltrans
TRAFFIC DESIGN

FUNCTIONAL SUPERVISOR: CAMILLE ABOU FADEL
CALCULATED-DESIGNED BY: ROBERT EDEJER
CHECKED BY: SHAHIN ADIBI
REVISED BY
DATE REVISED

LAST REVISION 06-16-16
DATE PLOTTED => 04-OCT-2016
TIME PLOTTED => 11:29

Dist	COUNTY	ROUTE	POST MILES TOTAL PROJECT	SHEET No.	TOTAL SHEETS
11	SD	8	T0.5/R0.7	46	162

06-15-16
REGISTERED CIVIL ENGINEER DATE

08-22-16
PLANS APPROVAL DATE

REGISTERED PROFESSIONAL ENGINEER
SHAHIN T. ADIBI
No. 54839
Exp. 06-30-18
CIVIL
STATE OF CALIFORNIA

THE STATE OF CALIFORNIA OR ITS OFFICERS OR AGENTS SHALL NOT BE RESPONSIBLE FOR THE ACCURACY OR COMPLETENESS OF SCANNED COPIES OF THIS PLAN SHEET.

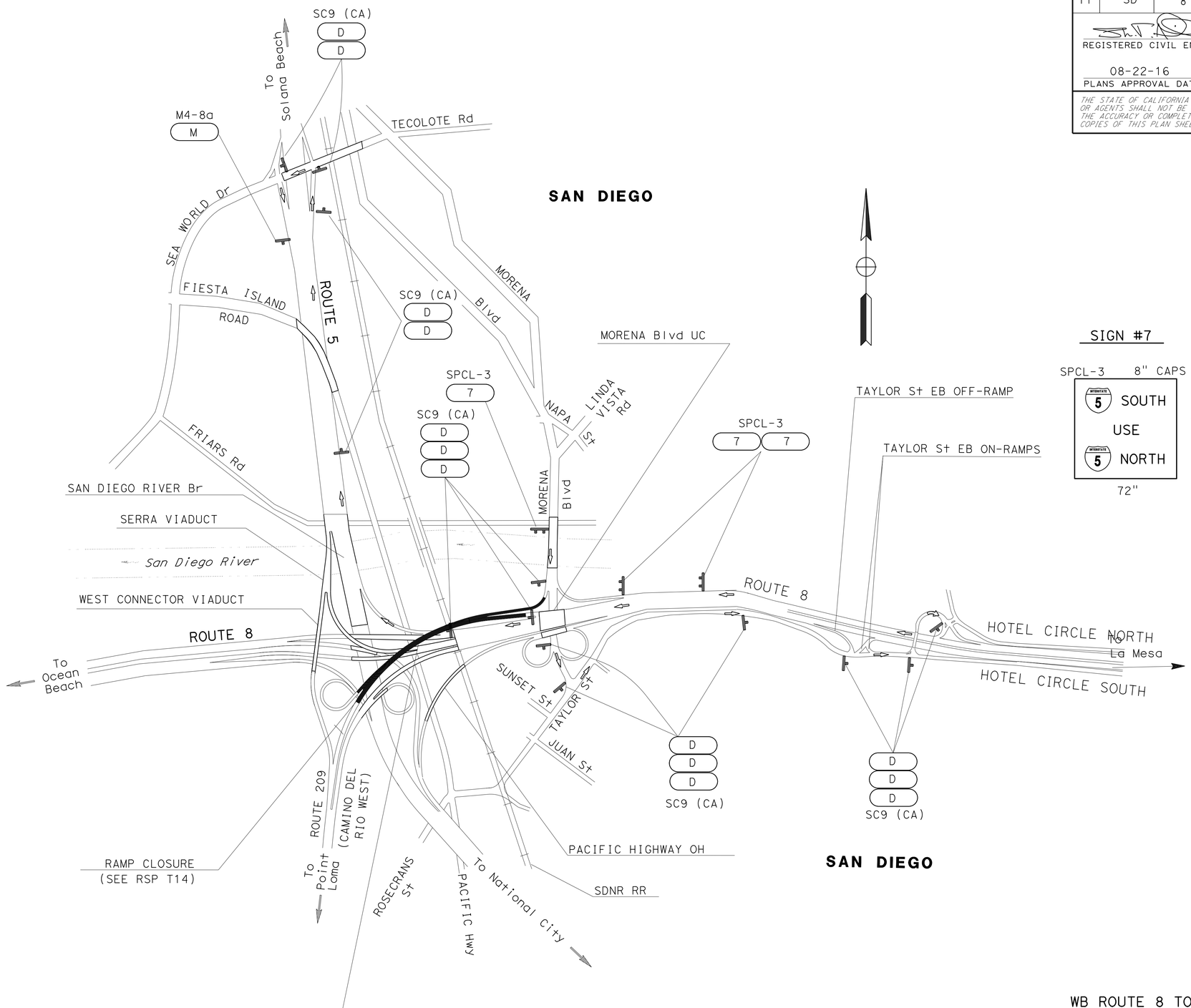

SIGN #7

SPCL-3 8" CAPS

INTERSTATE 5 SOUTH
USE
INTERSTATE 5 NORTH

72" 72"

WB ROUTE 8 TO SB ROUTE 5

TRAFFIC HANDLING PLAN

APPROVED FOR TRAFFIC HANDLING WORK ONLY

NO SCALE

TH-4

STATE OF CALIFORNIA - DEPARTMENT OF TRANSPORTATION
Caltrans
TRAFFIC DESIGN

FUNCTIONAL SUPERVISOR: CAMILLE ABOU FADEL
CALCULATED-DESIGNED BY: PARVIS NAHAVANDIAN
CHECKED BY: SHAHIN ADIBI
REVISED BY
DATE REVISED

LAST REVISION 06-21-16
DATE PLOTTED => 04-OCT-2016
TIME PLOTTED => 11:29

Dist	COUNTY	ROUTE	POST MILES TOTAL PROJECT	SHEET No.	TOTAL SHEETS
11	SD	8	T0.5/R0.7	47	162

06-15-16
REGISTERED CIVIL ENGINEER DATE

08-22-16
PLANS APPROVAL DATE

REGISTERED PROFESSIONAL ENGINEER
SHAHIN T. ADIBI
No. 54839
Exp. 06-30-18
CIVIL
STATE OF CALIFORNIA

THE STATE OF CALIFORNIA OR ITS OFFICERS OR AGENTS SHALL NOT BE RESPONSIBLE FOR THE ACCURACY OR COMPLETENESS OF SCANNED COPIES OF THIS PLAN SHEET.

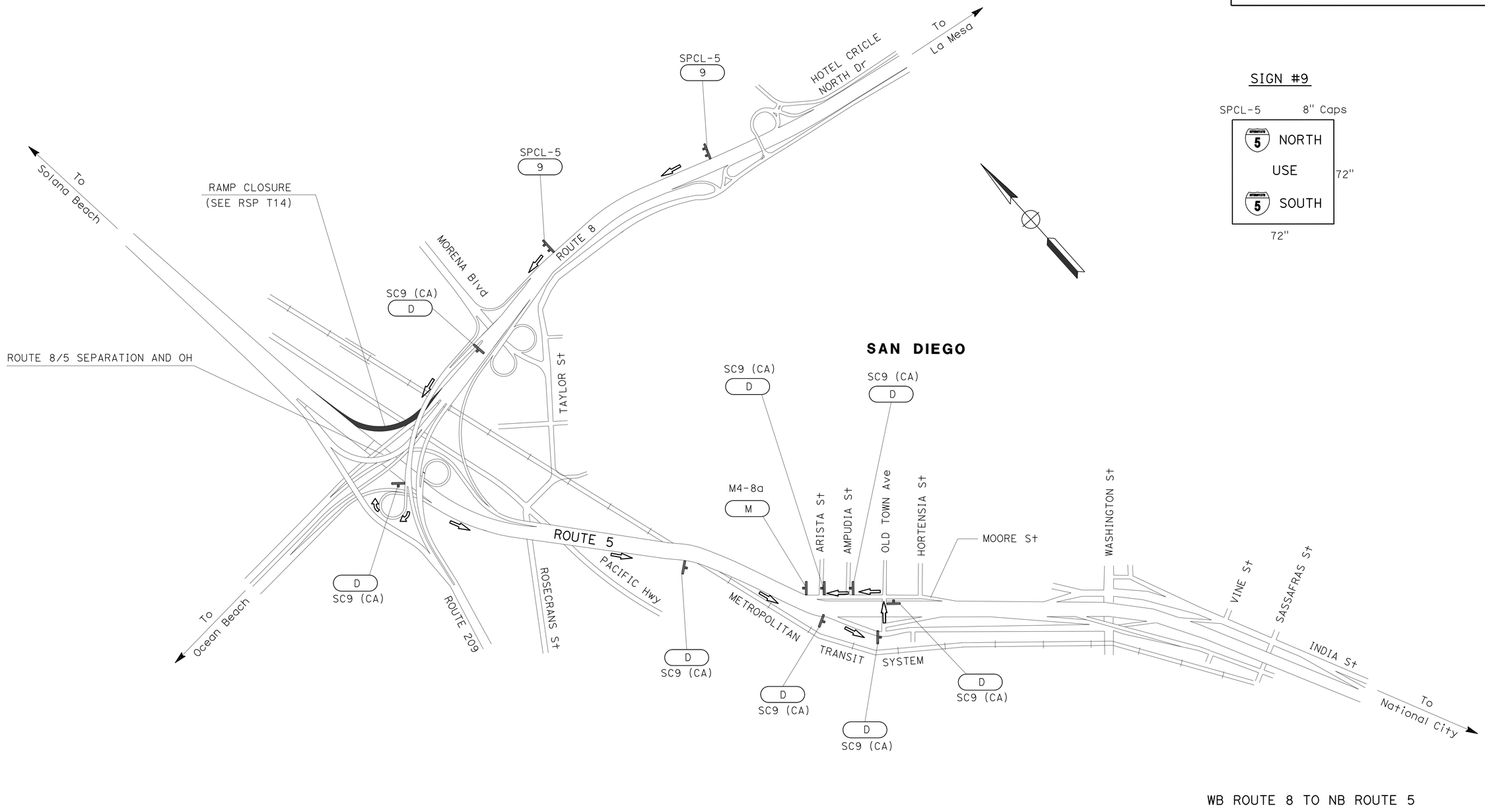

SIGN #9

SPCL-5 8" Caps

WB ROUTE 8 TO NB ROUTE 5

TRAFFIC HANDLING PLAN

APPROVED FOR TRAFFIC HANDLING WORK ONLY

NO SCALE

TH-5

STATE OF CALIFORNIA - DEPARTMENT OF TRANSPORTATION
Caltrans
TRAFFIC DESIGN

FUNCTIONAL SUPERVISOR: CAMILLE ABOU FADEL
CALCULATED-DESIGNED BY: PARVIS NAHAVANDIAN
CHECKED BY: SHAHIN ADIBI
REVISED BY
DATE REVISED

LAST REVISION 06-16-16
DATE PLOTTED => 04-OCT-2016
TIME PLOTTED => 11:29

Dist	COUNTY	ROUTE	POST MILES TOTAL PROJECT	SHEET No.	TOTAL SHEETS
11	SD	8	T0.5/R0.7	48	162

06-15-16
REGISTERED CIVIL ENGINEER DATE

08-22-16
PLANS APPROVAL DATE

REGISTERED PROFESSIONAL ENGINEER
SHAHIN T. ADIBI
No. 54839
Exp. 06-30-18
CIVIL
STATE OF CALIFORNIA

THE STATE OF CALIFORNIA OR ITS OFFICERS OR AGENTS SHALL NOT BE RESPONSIBLE FOR THE ACCURACY OR COMPLETENESS OF SCANNED COPIES OF THIS PLAN SHEET.

SIGN #10

SPCL-6 8" Caps

MORENA Blvd
USE
DETOUR

72" 72"

SIGN #11

SPCL-7 8" Caps

NORTHBOUND
MORENA Blvd

72" 72"

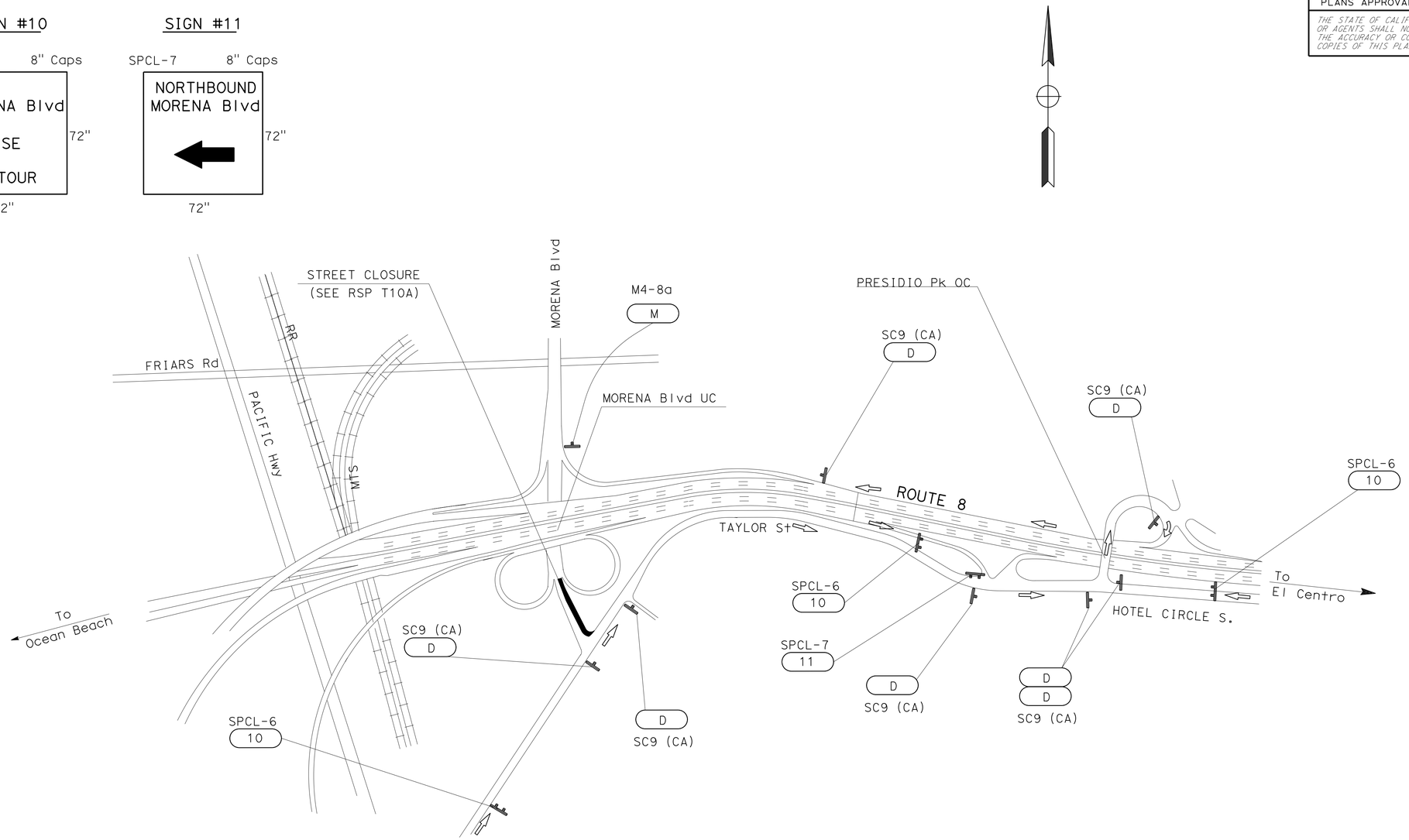

NB MORENA Blvd CLOSURE

TRAFFIC HANDLING PLAN

APPROVED FOR TRAFFIC HANDLING WORK ONLY

NO SCALE

TH-6

STATE OF CALIFORNIA - DEPARTMENT OF TRANSPORTATION
Caltrans
TRAFFIC DESIGN

FUNCTIONAL SUPERVISOR: CAMILLE ABOU FADEL
CALCULATED-DESIGNED BY: PARVIS NAHAVANDIAN
CHECKED BY: SHAHIN ADIBI
REVISED BY
DATE REVISED

LAST REVISION 06-21-16
DATE PLOTTED => 04-OCT-2016
TIME PLOTTED => 11:29

Dist	COUNTY	ROUTE	POST MILES TOTAL PROJECT	SHEET No.	TOTAL SHEETS
11	SD	8	T0.5/R0.7	49	162

06-15-16
REGISTERED CIVIL ENGINEER DATE

08-22-16
PLANS APPROVAL DATE

REGISTERED PROFESSIONAL ENGINEER
SHAHIN T. ADIBI
No. 54839
Exp. 06-30-18
CIVIL
STATE OF CALIFORNIA

THE STATE OF CALIFORNIA OR ITS OFFICERS OR AGENTS SHALL NOT BE RESPONSIBLE FOR THE ACCURACY OR COMPLETENESS OF SCANNED COPIES OF THIS PLAN SHEET.

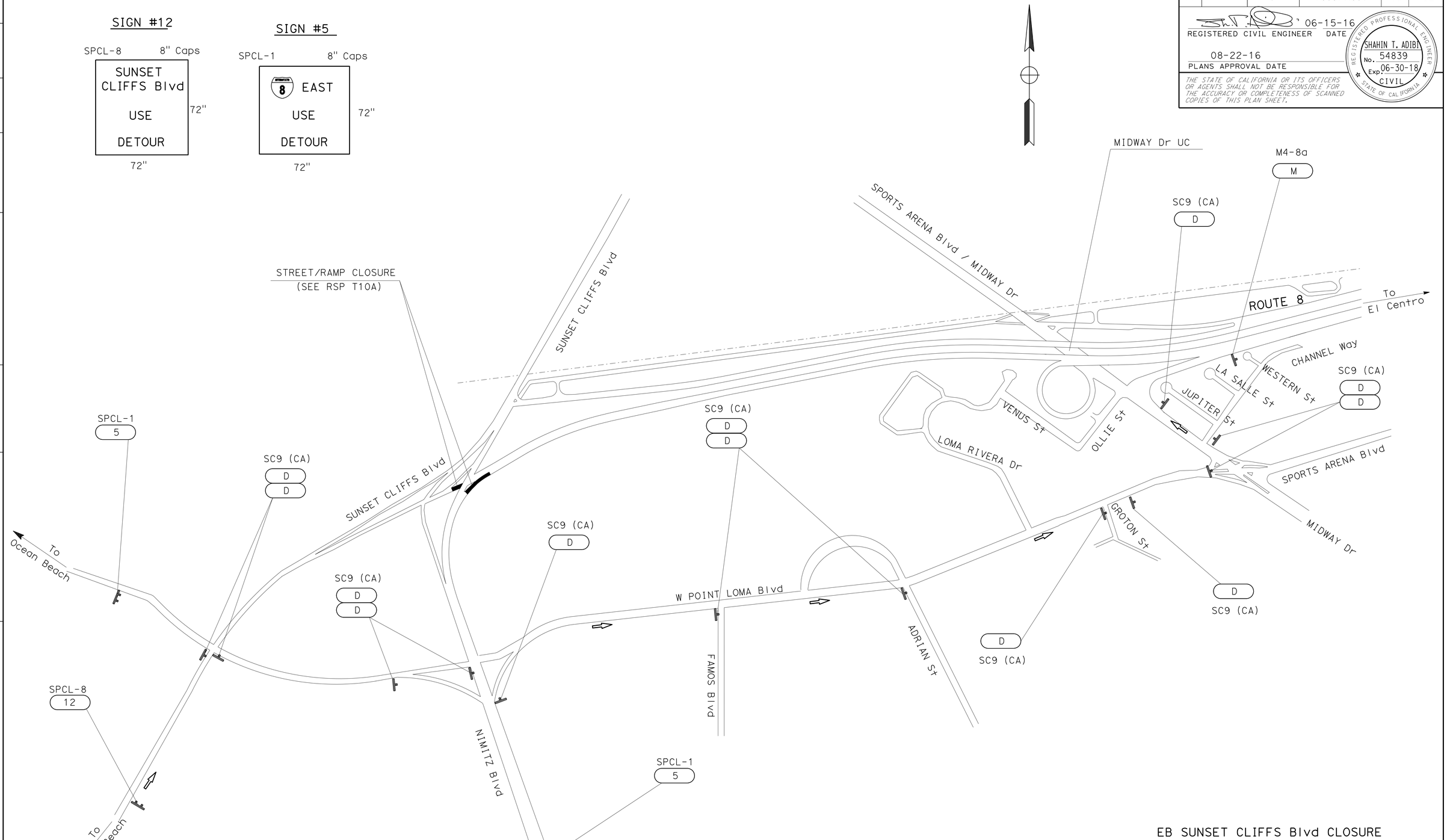

EB SUNSET CLIFFS Blvd CLOSURE

TRAFFIC HANDLING PLAN

APPROVED FOR TRAFFIC HANDLING WORK ONLY

NO SCALE

TH-7

STATE OF CALIFORNIA - DEPARTMENT OF TRANSPORTATION
Caltrans® **TRAFFIC DESIGN**

FUNCTIONAL SUPERVISOR: CAMILLE ABOU FADEL
CALCULATED-DESIGNED BY: PARVIS NAHAVANDIAN
CHECKED BY: SHAHIN ADIBI
REVISED BY
DATE REVISED

LAST REVISION 06-16-16
DATE PLOTTED => 04-OCT-2016
TIME PLOTTED => 11:29

Dist	COUNTY	ROUTE	POST MILES TOTAL PROJECT	SHEET No.	TOTAL SHEETS
11	SD	8	T0.5/R0.7	50	162

REGISTERED CIVIL ENGINEER 06-15-16 DATE

08-22-16
PLANS APPROVAL DATE

REGISTERED PROFESSIONAL ENGINEER
SOLOMON TADESSE
No. C62773
Exp. 06-30-18
CIVIL
STATE OF CALIFORNIA

THE STATE OF CALIFORNIA OR ITS OFFICERS OR AGENTS SHALL NOT BE RESPONSIBLE FOR THE ACCURACY OR COMPLETENESS OF SCANNED COPIES OF THIS PLAN SHEET.

NOTE:

FOR ACCURATE RIGHT OF WAY DATA, CONTACT
RIGHT OF WAY ENGINEERING AT THE DISTRICT OFFICE.

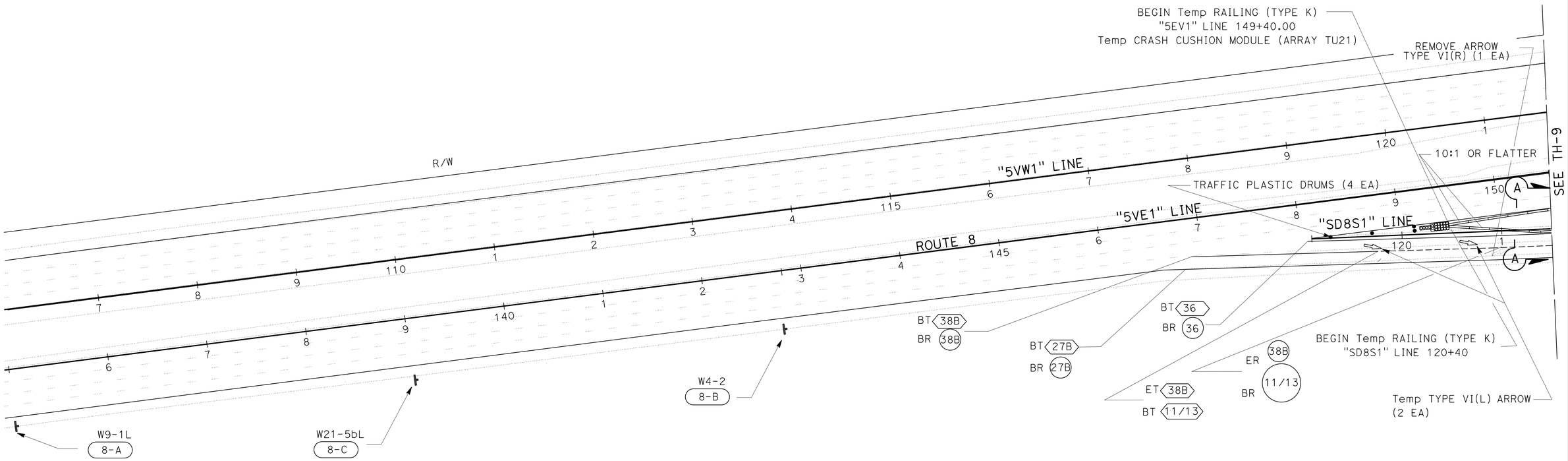

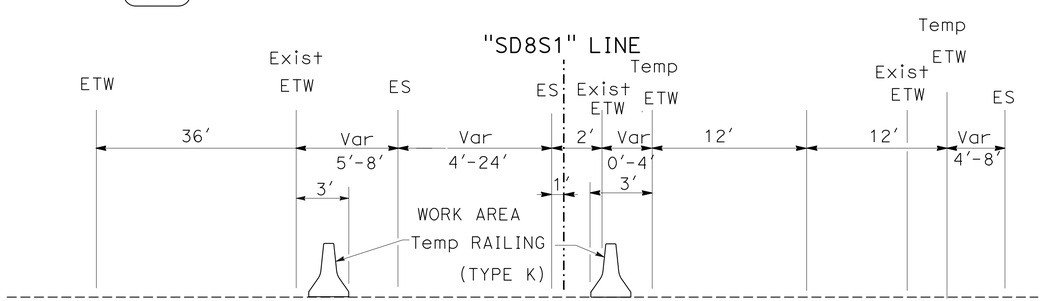

SECTION A -A

"SD8S1" LINE

NO SCALE

TRAFFIC HANDLING PLAN

SCALE: 1' = 50'

TH-8

STATE OF CALIFORNIA - DEPARTMENT OF TRANSPORTATION
Caltrans
DESIGN

FUNCTIONAL SUPERVISOR: KAZIM MAMDANI
CALCULATED-DESIGNED BY: ARY JAFF
CHECKED BY: SOLOMON TADESSE
REVISED BY
DATE REVISED

LAST REVISION 06-22-16
DATE PLOTTED => 04-OCT-2016
TIME PLOTTED => 11:29

Dist	COUNTY	ROUTE	POST MILES TOTAL PROJECT	SHEET No.	TOTAL SHEETS
11	SD	8	T0.5/R0.7	51	162

REGISTERED CIVIL ENGINEER 06-15-16 DATE

08-22-16
PLANS APPROVAL DATE

REGISTERED PROFESSIONAL ENGINEER SOLOMON TADESSE No. C62773 Exp. 06-30-18 CIVIL STATE OF CALIFORNIA

THE STATE OF CALIFORNIA OR ITS OFFICERS OR AGENTS SHALL NOT BE RESPONSIBLE FOR THE ACCURACY OR COMPLETENESS OF SCANNED COPIES OF THIS PLAN SHEET.

NOTE:

FOR ACCURATE RIGHT OF WAY DATA, CONTACT RIGHT OF WAY ENGINEERING AT THE DISTRICT OFFICE.

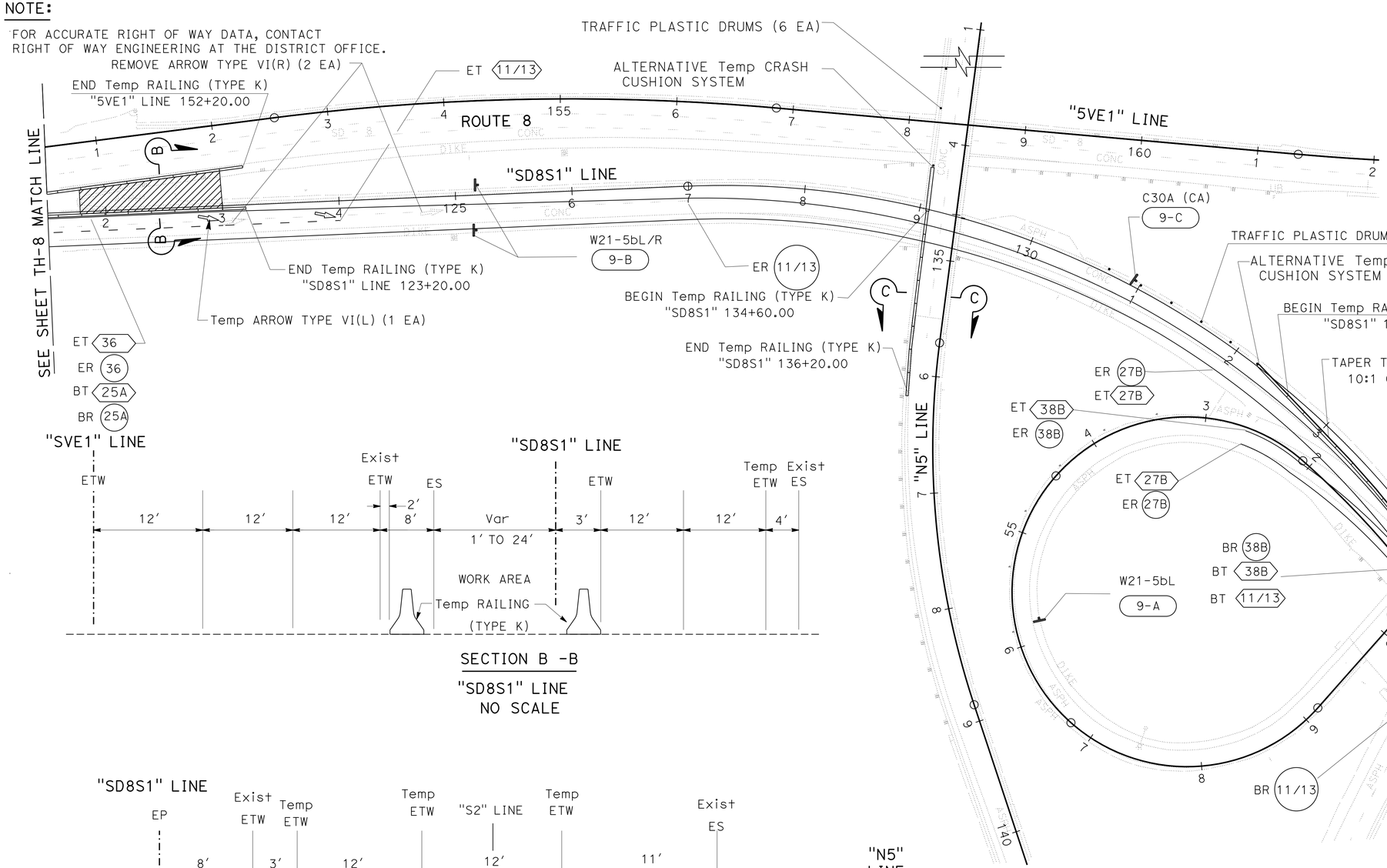

SECTION B -B

"SD8S1" LINE
NO SCALE

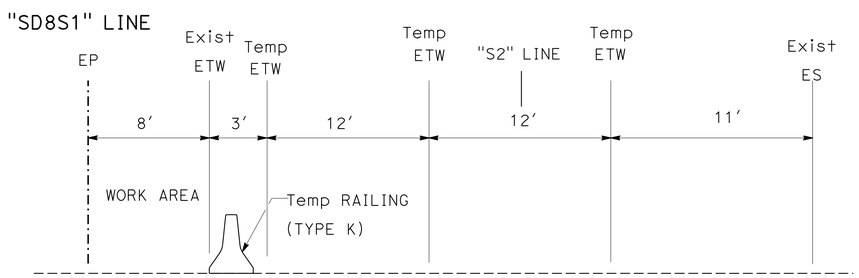

SECTION A -A

"S2" LINE

NO SCALE

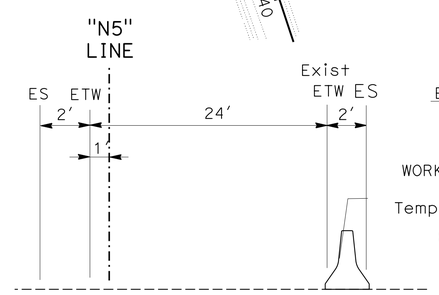

SECTION C-C

"N5" LINE

NO SCALE

TRAFFIC HANDLING PLAN

SCALE: 1′ = 50′

TH-9

APPROVED FOR TRAFFIC HANDLING WORK ONLY

STATE OF CALIFORNIA - DEPARTMENT OF TRANSPORTATION

Caltrans

DESIGN

FUNCTIONAL SUPERVISOR: KAZIM MAMDANI

CALCULATED-DESIGNED BY: ARY JAFF

CHECKED BY: SOLOMON TADESSE

REVISED BY

DATE REVISED

LAST REVISION 06-21-16

DATE PLOTTED => 04-OCT-2016

TIME PLOTTED => 11:29

Dist	COUNTY	ROUTE	POST MILES TOTAL PROJECT	SHEET No.	TOTAL SHEETS
11	SD	8	T0.5/R0.7	52	162

REGISTERED CIVIL ENGINEER 06-15-16 DATE

08-22-16
PLANS APPROVAL DATE

REGISTERED PROFESSIONAL ENGINEER SOLOMON TADESSE No. C62773 Exp. 06-30-18 CIVIL STATE OF CALIFORNIA

THE STATE OF CALIFORNIA OR ITS OFFICERS OR AGENTS SHALL NOT BE RESPONSIBLE FOR THE ACCURACY OR COMPLETENESS OF SCANNED COPIES OF THIS PLAN SHEET.

NOTE:

FOR ACCURATE RIGHT OF WAY DATA, CONTACT RIGHT OF WAY ENGINEERING AT THE DISTRICT OFFICE.

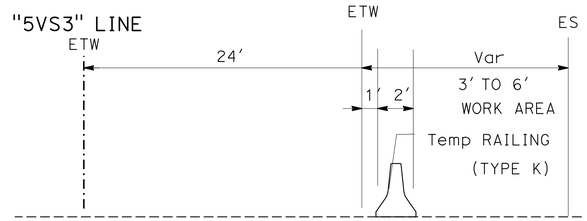

SECTION B -B
"5VS3" LINE
NO SCALE

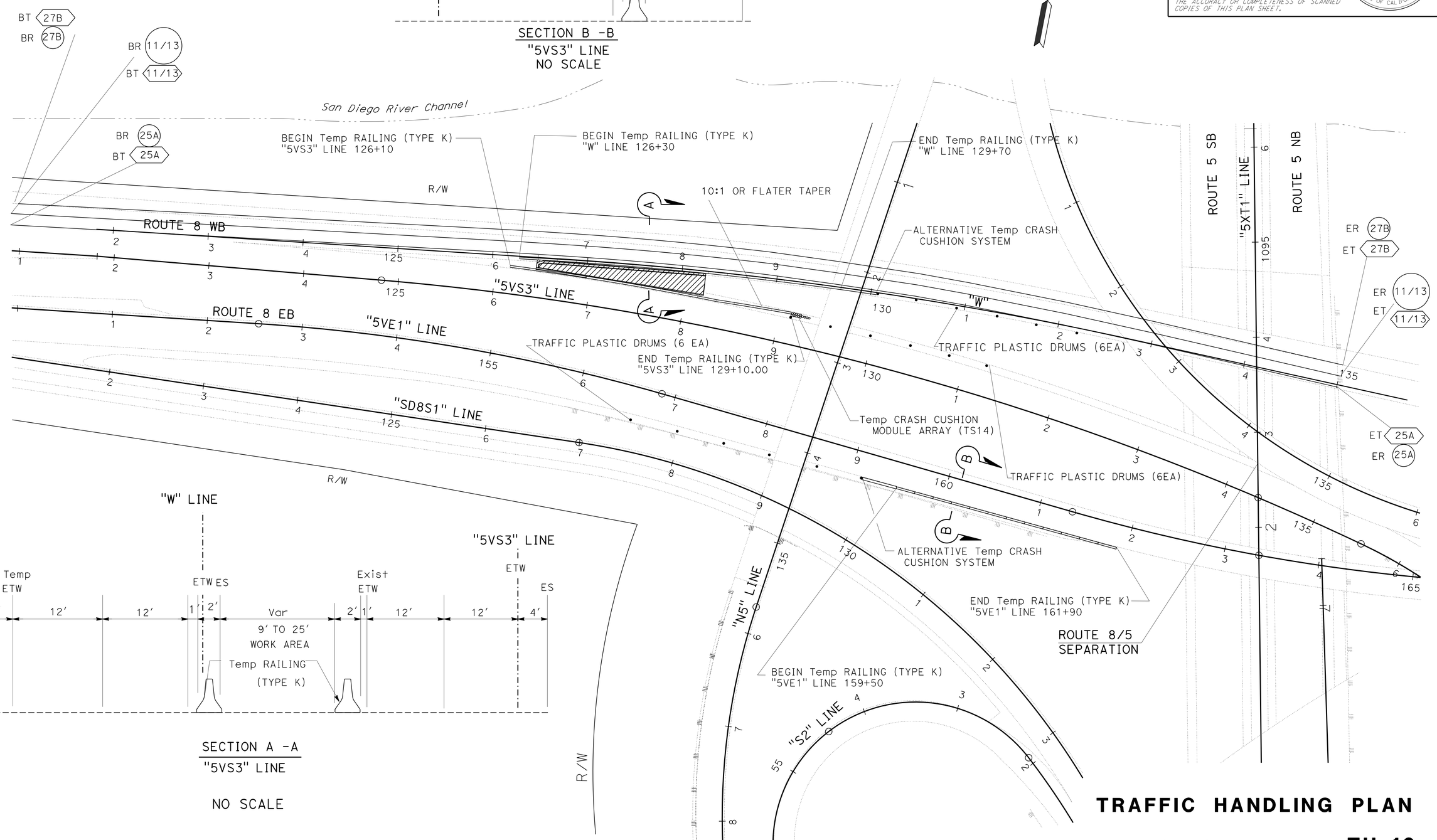

SECTION A -A
"5VS3" LINE

NO SCALE

TRAFFIC HANDLING PLAN

SCALE: 1' = 50'

TH-10

APPROVED FOR TRAFFIC HANDLING WORK ONLY

STATE OF CALIFORNIA - DEPARTMENT OF TRANSPORTATION
Caltrans
DESIGN

FUNCTIONAL SUPERVISOR: KAZIM MAMDANI
CALCULATED-DESIGNED BY: ARY JAFF
CHECKED BY: SOLOMON TADESSE
REVISED BY
DATE REVISED

LAST REVISION 06-22-16
DATE PLOTTED => 04-OCT-2016
TIME PLOTTED => 11:29

Dist	COUNTY	ROUTE	POST MILES TOTAL PROJECT	SHEET No.	TOTAL SHEETS
11	SD	8	T0.5/R0.7	53	162

REGISTERED CIVIL ENGINEER 06-15-16 DATE

08-22-16
PLANS APPROVAL DATE

REGISTERED PROFESSIONAL ENGINEER SOLOMON TADESSE No. C62773 Exp. 06-30-18 CIVIL STATE OF CALIFORNIA

THE STATE OF CALIFORNIA OR ITS OFFICERS OR AGENTS SHALL NOT BE RESPONSIBLE FOR THE ACCURACY OR COMPLETENESS OF SCANNED COPIES OF THIS PLAN SHEET.

NOTE:

FOR ACCURATE RIGHT OF WAY DATA, CONTACT RIGHT OF WAY ENGINEERING AT THE DISTRICT OFFICE.

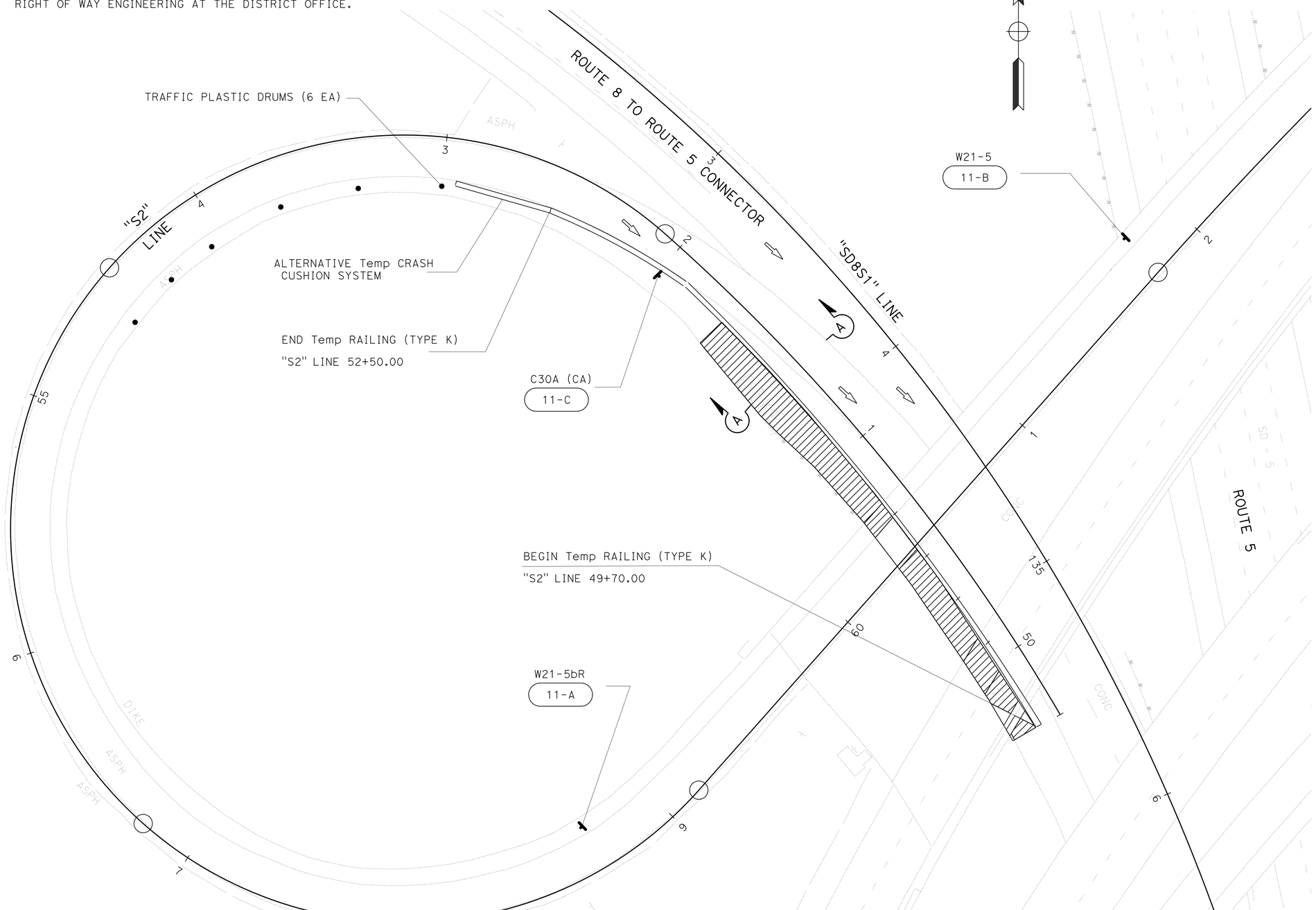

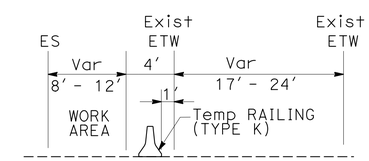

SECTION A-A

"S2" LINE

NO SCALE

APPROVED FOR TRAFFIC HANDLING WORK ONLY

TRAFFIC HANDLING PLAN

SCALE: 1" = 20'

TH-11

REVISED BY	DATE REVISED

CALCULATED-DESIGNED BY	CHECKED BY
ARY JAFF	SOLOMON TADESSE

FUNCTIONAL SUPERVISOR: KAZIM MAMDANI

STATE OF CALIFORNIA - DEPARTMENT OF TRANSPORTATION

Caltrans DESIGN

LAST REVISION 06-22-16 | DATE PLOTTED => 04-OCT-2016 | TIME PLOTTED => 11:29

Dist	COUNTY	ROUTE	POST MILES TOTAL PROJECT	SHEET No.	TOTAL SHEETS
11	SD	8	T0.5/R0.7	54	162

REGISTERED CIVIL ENGINEER 06-15-16 DATE

08-22-16
PLANS APPROVAL DATE

REGISTERED PROFESSIONAL ENGINEER SOLOMON TADESSE No. C62773 Exp. 06-30-18 CIVIL STATE OF CALIFORNIA

THE STATE OF CALIFORNIA OR ITS OFFICERS OR AGENTS SHALL NOT BE RESPONSIBLE FOR THE ACCURACY OR COMPLETENESS OF SCANNED COPIES OF THIS PLAN SHEET.

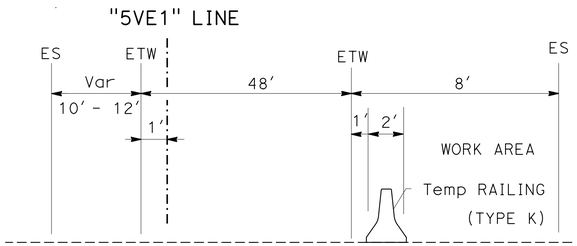

SECTION D -D
"M5" LINE

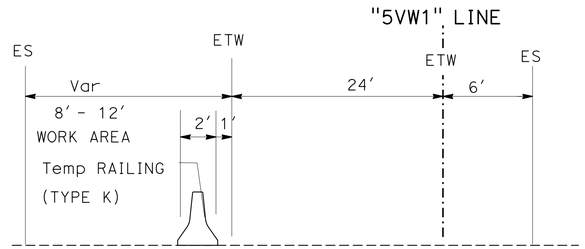

SECTION A -A
"5VW1" LINE

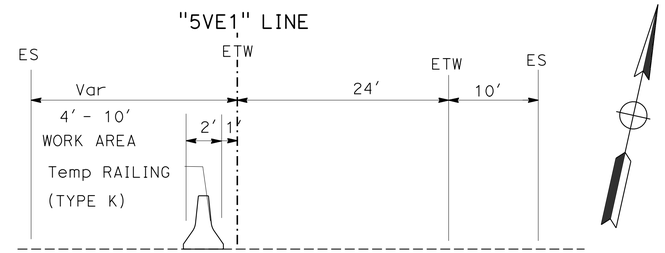

SECTION B -B
"5VE1" LINE

SECTION C -C
"M5" LINE

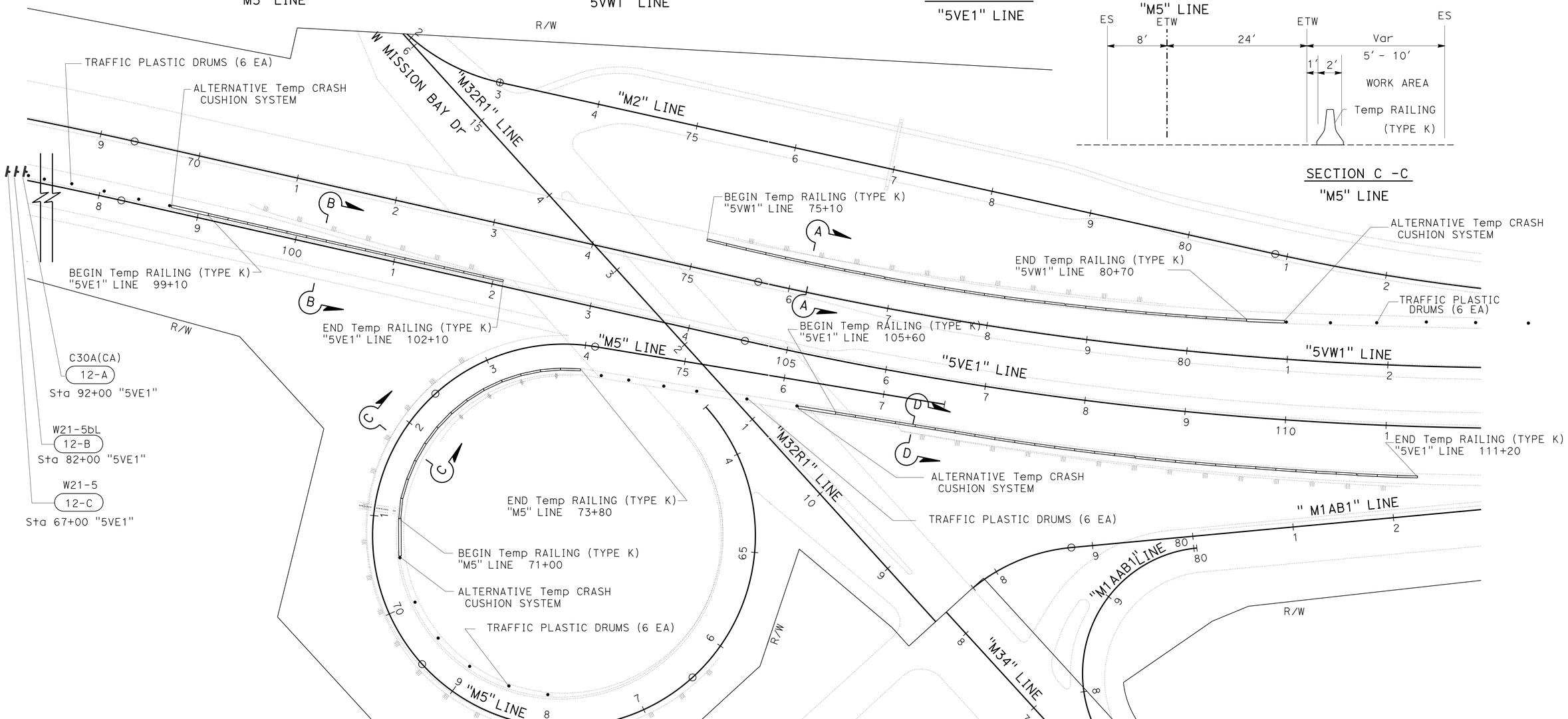

NOTE:
FOR ACCURATE RIGHT OF WAY DATA, CONTACT RIGHT OF WAY ENGINEERING AT THE DISTRICT OFFICE.

TRAFFIC HANDLING PLAN

SCALE: 1" = 50′

TH-12

STATE OF CALIFORNIA - DEPARTMENT OF TRANSPORTATION
Caltrans® PROJECT DEVELOPMENT

FUNCTIONAL SUPERVISOR: KAZIM MAMDANI
CALCULATED-DESIGNED BY: ARY JAFF
CHECKED BY: SOLOMON TADESSE
REVISED BY
DATE REVISED

LAST REVISION 06-22-16
DATE PLOTTED => 04-OCT-2016
TIME PLOTTED => 11:29

Dist	COUNTY	ROUTE	POST MILES TOTAL PROJECT	SHEET No.	TOTAL SHEETS
11	SD	8	T0.5/R0.7	55	162

REGISTERED CIVIL ENGINEER 06-15-16 DATE

08-22-16
PLANS APPROVAL DATE

REGISTERED PROFESSIONAL ENGINEER SOLOMON TADESSE No. C62773 Exp. 06-30-18 CIVIL STATE OF CALIFORNIA

THE STATE OF CALIFORNIA OR ITS OFFICERS OR AGENTS SHALL NOT BE RESPONSIBLE FOR THE ACCURACY OR COMPLETENESS OF SCANNED COPIES OF THIS PLAN SHEET.

NOTE:
FOR ACCURATE RIGHT OF WAY DATA, CONTACT RIGHT OF WAY ENGINEERING AT THE DISTRICT OFFICE.

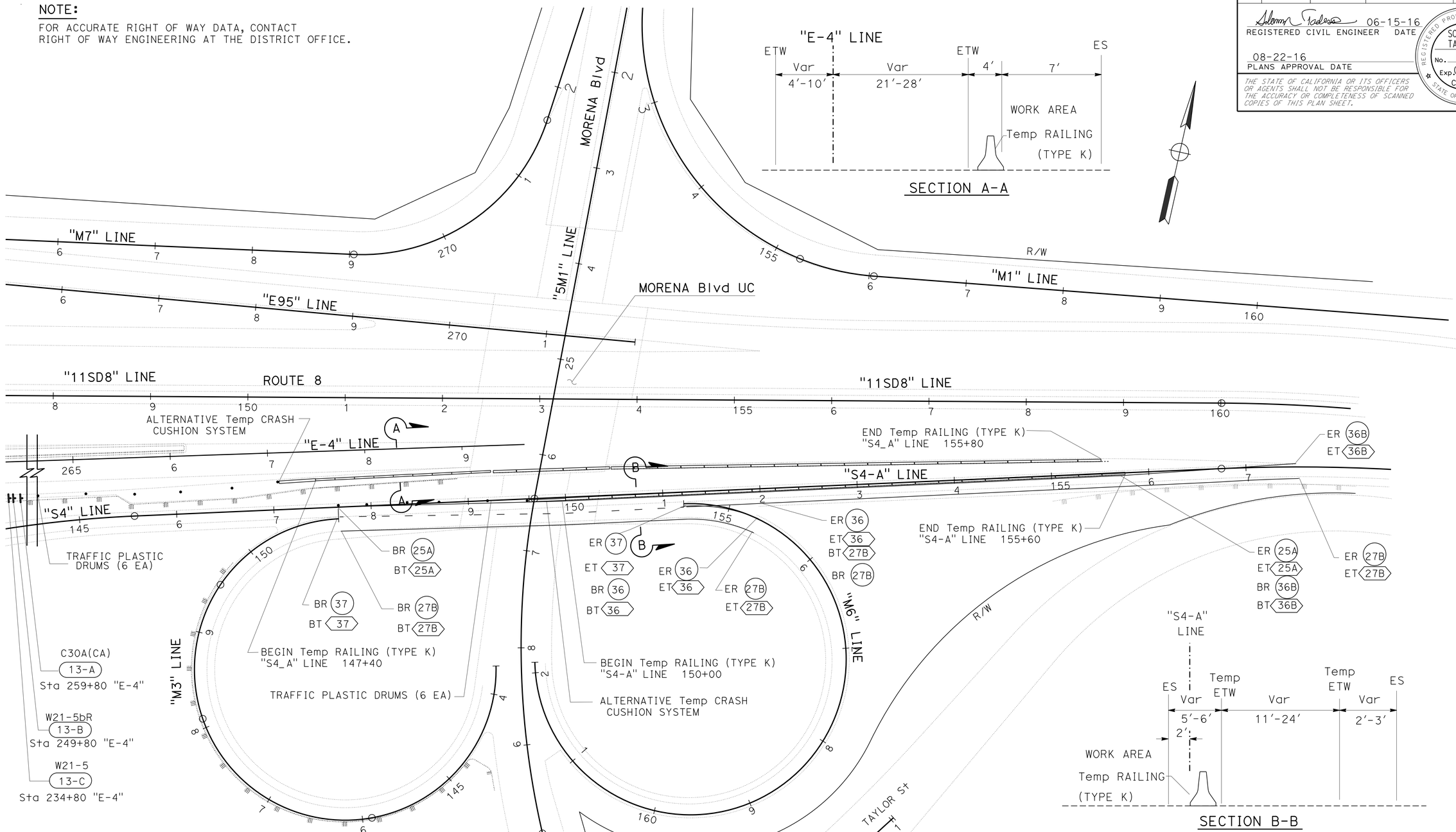

TRAFFIC HANDLING PLAN
TH-13

SCALE: 1" = 50'

STATE OF CALIFORNIA - DEPARTMENT OF TRANSPORTATION
Caltrans PROJECT DEVELOPMENT

FUNCTIONAL SUPERVISOR: KAZIM MAMDANI
CALCULATED-DESIGNED BY: ARY JAFF
CHECKED BY: SOLOMON TADESSE
REVISED BY
DATE REVISED

LAST REVISION 05-17-16
DATE PLOTTED => 04-OCT-2016
TIME PLOTTED => 11:29

Dist	COUNTY	ROUTE	POST MILES TOTAL PROJECT	SHEET No.	TOTAL SHEETS
11	SD	8	T0.5/R0.7	56	162

REGISTERED CIVIL ENGINEER 06-15-16 DATE

08-22-16
PLANS APPROVAL DATE

REGISTERED PROFESSIONAL ENGINEER SOLOMON TADESSE No. C62773 Exp. 06-30-18 CIVIL STATE OF CALIFORNIA

THE STATE OF CALIFORNIA OR ITS OFFICERS OR AGENTS SHALL NOT BE RESPONSIBLE FOR THE ACCURACY OR COMPLETENESS OF SCANNED COPIES OF THIS PLAN SHEET.

NOTE:
FOR ACCURATE RIGHT OF WAY DATA, CONTACT RIGHT OF WAY ENGINEERING AT THE DISTRICT OFFICE.

"SD8S1" LINE

SECTION A-A
"SD8S1" LINE

"N3" LINE

SECTION B-B
"N3" LINE

"5VS3" LINE

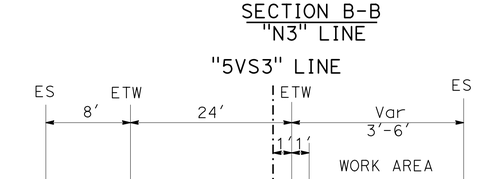

SECTION C-C
"5VS3" LINE

APPROVED FOR TRAFFIC HANDLING WORK ONLY

TRAFFIC HANDLING PLAN
TH-14

SCALE: 1' = 50'

STATE OF CALIFORNIA - DEPARTMENT OF TRANSPORTATION
Caltrans® DESIGN

FUNCTIONAL SUPERVISOR: KAZIM MAMDANI
CALCULATED-DESIGNED BY: ARY JAFF
CHECKED BY: SOLOMON TADESSE
REVISED BY
DATE REVISED

LAST REVISION 06-22-16
DATE PLOTTED => 04-OCT-2016
TIME PLOTTED => 11:29

Dist	COUNTY	ROUTE	POST MILES TOTAL PROJECT	SHEET No.	TOTAL SHEETS
11	SD	8	T0.5/R0.7	57	162

REGISTERED CIVIL ENGINEER 06-15-16 DATE

08-22-16
PLANS APPROVAL DATE

REGISTERED PROFESSIONAL ENGINEER SOLOMON TADESSE No. C62773 Exp. 06-30-18 CIVIL STATE OF CALIFORNIA

THE STATE OF CALIFORNIA OR ITS OFFICERS OR AGENTS SHALL NOT BE RESPONSIBLE FOR THE ACCURACY OR COMPLETENESS OF SCANNED COPIES OF THIS PLAN SHEET.

NOTE:

FOR ACCURATE RIGHT OF WAY DATA, CONTACT RIGHT OF WAY ENGINEERING AT THE DISTRICT OFFICE.

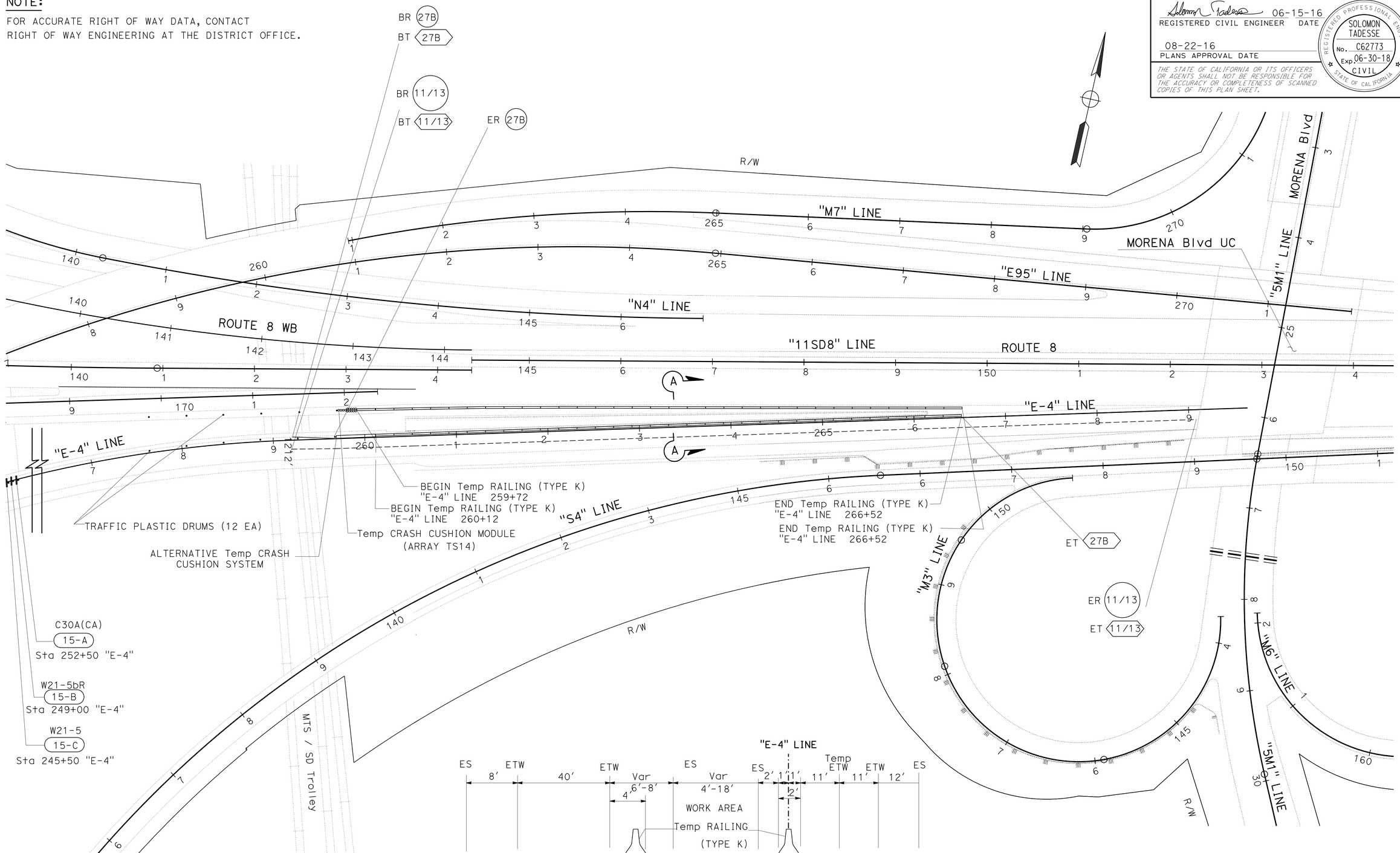

SECTION A-A
"E-4" LINE

TRAFFIC HANDLING PLAN

SCALE: 1" = 50'

TH-15

STATE OF CALIFORNIA - DEPARTMENT OF TRANSPORTATION
Caltrans PROJECT DEVELOPMENT

FUNCTIONAL SUPERVISOR: KAZIM MAMDANI
CALCULATED-DESIGNED BY: ARY JAFF
CHECKED BY: SOLOMON TADESSE
REVISED BY
DATE REVISED

LAST REVISION 06-22-16 | DATE PLOTTED => 04-OCT-2016 | TIME PLOTTED => 11:29

Dist	COUNTY	ROUTE	POST MILES TOTAL PROJECT	SHEET No.	TOTAL SHEETS
11	SD	8	T0.5/R0.7	58	162

REGISTERED CIVIL ENGINEER 06-15-16 DATE

08-22-16
PLANS APPROVAL DATE

REGISTERED PROFESSIONAL ENGINEER SOLOMON TADESSE No. C62773 Exp. 06-30-18 CIVIL STATE OF CALIFORNIA

THE STATE OF CALIFORNIA OR ITS OFFICERS OR AGENTS SHALL NOT BE RESPONSIBLE FOR THE ACCURACY OR COMPLETENESS OF SCANNED COPIES OF THIS PLAN SHEET.

TRAFFIC HANDLING QUANTITIES

LOCATION	SHEET #	LINE	SIDE	STATION LIMITS	TEMPORARY RAILING (TYPE K)	TEMPORARY CRASH CUSHION MODULE	ALTERNATIVE TEMPORARY CRASH CUSHION SYSTEM	TRAFFIC PLASTIC DRUM
					(LF)	(EA)	(EA)	(EA)
MGS #1 ANCHOR BLOCK	TH-12	"5VE1"	L†	99+10 TO 102+10	300		1	6
MGS #2 ANCHOR BLOCK	TH-12	"5VE1"	R†	105+60 TO 111+20	560		1	6
MGS #5 ANCHOR BLOCK	TH-10	"5VE1"	R†	159+50 TO 161+90	240		1	6
MGS #8 ANCHOR BLOCK	TH-12	"5VW1"	L†	75+10 TO 80+70	560		1	6
MGS #12 ANCHOR BLOCK	TH-9	"N5"	R†	134+60 TO 136+20	160		1	6
MGS #17 ANCHOR BLOCK	TH-14	"5VS3"	R†	136+12 TO 137+12	100		1	6
BEYOND GORE PAVING 1	TH-8,9	"5VE1"	R†	149+40 TO 152+20	280	21		4
BEYOND GORE PAVING 1	TH-8,9	"SD8S1"	L†	120+40 TO 123+20	280			
BEYOND GORE PAVING 2	TH-10	"5VS3"	L†	126+30 TO 129+70	340	14		6
BEYOND GORE PAVING 2	TH-10	"W"	R†	126+10 TO 129+10	300		1	6
BEYOND GORE PAVING 3	TH-15	"E-4"	L†	259+72 TO 266+52	680	14		6
BEYOND GORE PAVING 3	TH-15	"E-4"	R†	260+12 TO 266+52	640	14		6
MGS #6 & BEYOND GORE PAVING 4	TH-13	"S4_A"	L†	147+40 TO 155+80	840		1	6
BEYOND GORE PAVING 4	TH-13	"S4_A"	R†	150+00 TO 155+60	560		1	5
CONCRETE BARRIER 1	TH-14	"SD8S1"	R†	126+70 TO 130+10	340	14		6
CONCRETE BARRIER 2	TH-11	"S2"	R†	49+70 TO 52+50	280		1	6
CONCRETE BARRIER 3	TH-14	"5XT1"	R†	1086+50 TO 1094+50	800	14		6
CONCRETE BARRIER 4	TH-9	"SD8S1"	L†	132+60 TO 136+80	420		1	6
CONCRETE BARRIER 5	TH-12	"M5"	R†	71+00 TO 73+80	280		1	6
				TOTAL	7,960	91	12	105

CONSTRUCTION AREA SIGNS

SIGN No.	TYPE	PANEL SIZE (In)	No. OF POST AND SIZE (In)	No. OF SIGNS
5	SPCL-1	72 X 72	2-6 X 6 (S)	4
6	SPCL-2	72 X 72	2-6 X 6 (S)	2
7	SPCL-3	72 X 72	2-6 X 6 (S)	3
8	SPCL-4	72 X 72	2-6 X 6 (S)	2
9	SPCL-5	72 X 72	2-6 X 6 (S)	2
10	SPCL-6	72 X 72	2-6 X 6 (S)	3
11	SPCL-7	72 X 72	2-6 X 6 (S)	1
12	SPCL-8	72 X 72	2-6 X 6 (S)	1
13	SPCL-9	72 X 72	2-6 X 6 (S)	2
D	SC9 (CA)	36 X 36	1-4 X 6 (S)	68
M	M4-8a	24 X 18	1-4 X 4 (S)	7
8-A	W9-1L	48 X 48	1-4 X 6 (S)	1
8-B	W4-2	48 X 48	1-4 X 6 (S)	1
8-C	W21-5bL	48 X 48	1-4 X 6 (S)	1
9-A	W21-5bL	48 X 48	1-4 X 6 (S)	1
9-B	W21-5bL/R	48 X 48	1-4 X 6 (S)	2
9-C	C30A(CA)	48 X 48	1-4 X 6 (S)	1
11-A	W21-5bR	48 X 48	1-4 X 6 (S)	1
11-B	W21-5	48 X 48	1-4 X 6 (S)	1
11-C	C30A(CA)	48 X 48	1-4 X 6 (S)	1
12-A	C30A(CA)	48 X 48	1-4 X 6 (S)	1
12-B	W21-5bL	48 X 48	1-4 X 6 (S)	1
12-C	W21-5	48 X 48	1-4 X 6 (S)	1
13-A	C30A(CA)	48 X 48	1-4 X 6 (S)	1
13-B	W21-5bR	48 X 48	1-4 X 6 (S)	1
13-C	W21-5	48 X 48	1-4 X 6 (S)	1
15-A	C30A(CA)	48 X 48	1-4 X 6 (S)	1
15-B	W21-5bR	48 X 48	1-4 X 6 (S)	1
15-C	W21-5	48 X 48	1-4 X 6 (S)	1
			TOTAL	114

REMOVE THERMOPLASTIC PAVEMENT MARKING

LOCATION						TYPE VI SQFT
ROUTE	Dir	LINE	FROM STATION	TO STATION	SHEET	
8	EB	"5VE1" TO "SD8S1"	148+60	123+10	TH-8, 9	126
					TOTAL	126 *

REMOVE DELINEATION

LOCATION					REMOVE THERMOPLASTIC TRAFFIC STIPE			REMOVE PAVEMENT MARKER (N)
SHEET	Dir	LINE	FROM STATION	TO STATION	TYPE 36	TYPE 36B	TYPE 38	TYPE G CLEAR
					(LF)	(LF)	(LF)	(EA)
TH-8,9	EB	"5VE1" TO "SD8S1"	146+90	121+00			600	28
TH-8,9	EB	"SD8S1"	118+92	121+80	560			13
TH-9	EB	"S2"	50+90	52+80			380	18
TH-13	EB	"S4_A"	151+20	152+05	170			5
TH-13	EB	"S4_A"	151+20	155+30	160			5
TH-13	EB	"S4_A"	155+70	157+50		360		
				SUBTOTAL	890	360	980	
				TOTAL	2,230*			

* SEE "PDQ" SHEETS FOR ADDITIONAL QUANTITIES.

(N) = NOT A SEPARATE PAY ITEM, FOR INFORMATION ONLY.

TRAFFIC HANDLING QUANTITIES

THQ-1

REVISED BY | DATE REVISED

ARY JAFF | SOLOMON TADESSE

CALCULATED-DESIGNED BY | CHECKED BY

FUNCTIONAL SUPERVISOR: KAZIM MAMDANI

STATE OF CALIFORNIA - DEPARTMENT OF TRANSPORTATION

Caltrans® PROJECT DEVELOPMENT

LAST REVISION 06-22-16 | DATE PLOTTED => 04-OCT-2016 | TIME PLOTTED => 11:29

Dist	COUNTY	ROUTE	POST MILES TOTAL PROJECT	SHEET No.	TOTAL SHEETS
11	SD	8	T0.5/R0.7	59	162

REGISTERED CIVIL ENGINEER 06-15-16 DATE

08-22-16
PLANS APPROVAL DATE

REGISTERED PROFESSIONAL ENGINEER SOLOMON TADESSE No. C62773 Exp. 06-30-18 CIVIL STATE OF CALIFORNIA

THE STATE OF CALIFORNIA OR ITS OFFICERS OR AGENTS SHALL NOT BE RESPONSIBLE FOR THE ACCURACY OR COMPLETENESS OF SCANNED COPIES OF THIS PLAN SHEET.

REMOVE DELINEATION

SHEET	SIDE	LINE	STATION LIMITS BEGIN	STATION LIMITS END	LENGTH (N)	REMOVE PAINTED TRAFFIC STRIPE TYPE 11/13 (LF)	TYPE 37 (LF)	TYPE 25A (LF)	TYPE 27B (LF)	REMOVE PAVEMENT MARKER (N) TYPE G CLEAR (EA)	TYPE H YELLOW EA	TYPE C RED/CLEAR (EA)
TH-8,9	EB	"5VE1" TO "SD8S1"	146+90	132+00	1400				1,400			
TH-8,9	EB	"SD8S1"	124+00	127+00	600	150				13		52
TH-9	EB	"SD8S1"	121+80	139+50	1770			1,770			75	
TH-9	EB	"S2" TO "SD8S1"	139+50	52+70	684				684			
TH-9	EB	"SD8S1"	135+30	139+50	420	105				9		36
TH-10	WB	"W"	121+00	135+00	1400	350	70			30		120
TH-10	WB	"W"	121+00	135+00	1400				1,400			
TH-10	WB	"W"	121+00	135+00	1400			1,400			60	
TH-13	EB	"S4_A"	147+70	151+20	350							9
TH-13	EB	"S4_A" TO "M6"	147+70	155+20	425				425			
TH-13	EB	"S4_A"	147+70	155+70	800			800			35	
TH-13	EB	"S4_A"	152+05	157+50	545				545			
TH-15	EB	"E-4"	259+10	269+00	990	248						84
TH-15	EB	"E-4"	259+10	259+60	50				50			
				SUBTOTAL		853	70	3,970	4,504			
				TOTAL		9,397 *						

* SEE "PDQ" SHEETS FOR ADDITIONAL QUANTITIES.

TEMPORARY PAVEMENT DELINEATION QUANTITIES

SHEET	SIDE	LINE	STATION LIMITS BEGIN	STATION LIMITS END	LENGTH (N)	Temp TRAFFIC STRIPE (PAINT) TYPE 11/13 (LF)	TYPE 25A (LF)	TYPE 27B (LF)	TYPE 36 (LF)	TYPE 38B (LF)	TYPE 36B (LF)	TYPE 37 (LF)	Temp PAVEMENT MARKING (PAINT) TYPE VI ARROW (SQFT)	Temp PAVEMENT MARKER RETROREFLECTIVE TYPE G CLEAR (EA)	TYPE H YELLOW EA	NON-REFLECTIVE TYPE A WHITE (EA)
TH-8,9	EB	"5VE1" TO "SD8S1"	146+90.00	132+00.00	1410			1410								
TH-8,9	EB	"5VE1" TO "SD8S1"	146+90.00	124+00.00	200					400				9		
TH-8,9	EB	"5VE1" TO "SD8S1"	118+92.00	121+80.00	280				560					12		
TH-9	EB	"SD8S1"	118+92.00	169+50.00	4760		4,760								199	
TH-9	EB	"S2"	50+90.00	52+80.00	190					190				8		
TH-9	EB	"SD8S1"	134+30.00	139+50.00	520	520								11		44
TH-9	EB	"S2" TO "SD8S1"	52+80.00	139+50.00	730			730								
TH-10	EB	"W"	121+00.00	135+00.00	1400			1400								
TH-10	EB	"W"	121+00.00	135+00.00	1400	1400								30		117
TH-10	EB	"W"	121+00.00	135+00.00	1400		1400								59	
TH-13	EB	"S4_A" TO "M6"	147+70.00	155+20.00	425			425								
TH-13	EB	"S4_A" TO "M6"	147+70.00	151+20.00	350							350		12		8
TH-13	EB	"S4_A" TO "M6"	147+70.00	155+80.00	810		810								34	
TH-13	EB	"S4_A" TO "M6"	151+20.00	155+30.00	410						820			18		
TH-13	EB	"S4_A" TO "M6"	151+20.00	152+05.00	85				170					8		
TH-13	EB	"S4_A" TO "M6"	152+05.00	157+50.00	545			545								
TH-15	EB	"E-4"	259+10.00	266+50.00	740			740								
TH-15	EB	"E-4"	259+10.00	269+00.00	990	990										
TH-8,9	EB												126			
				SUBTOTAL		2,910	6,970	5,250	730	590	820	350	126	108	292	169
				TOTAL		17,620							126	569		

* SEE "PDQ" SHEETS FOR ADDITIONAL QUANTITIES.

(N) = NOT A SEPARATE PAY ITEM, FOR INFORMATION ONLY.

TRAFFIC HANDLING QUANTITIES

THQ-2

REVISED BY | DATE REVISED
ARY JAFF | SOLOMON TADESSE
CALCULATED-DESIGNED BY | CHECKED BY
FUNCTIONAL SUPERVISOR: KAZIM MAMDANI
STATE OF CALIFORNIA - DEPARTMENT OF TRANSPORTATION
Caltrans® PROJECT DEVELOPMENT

LAST REVISION 06-22-16 | DATE PLOTTED => 04-OCT-2016 | TIME PLOTTED => 11:29

Dist	COUNTY	ROUTE	POST MILES TOTAL PROJECT	SHEET No.	TOTAL SHEETS
11	SD	8	T0.5/R0.7	60	162

REGISTERED CIVIL ENGINEER 06-15-16 DATE

08-22-16
PLANS APPROVAL DATE

REGISTERED PROFESSIONAL ENGINEER SHAHIN T. ADIBI No. 54839 Exp. 6-30-18 CIVIL STATE OF CALIFORNIA

THE STATE OF CALIFORNIA OR ITS OFFICERS OR AGENTS SHALL NOT BE RESPONSIBLE FOR THE ACCURACY OR COMPLETENESS OF SCANNED COPIES OF THIS PLAN SHEET.

DETAIL 25A (Mod)

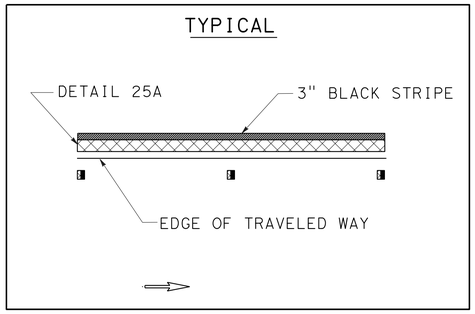

DETAIL 25 (Mod)

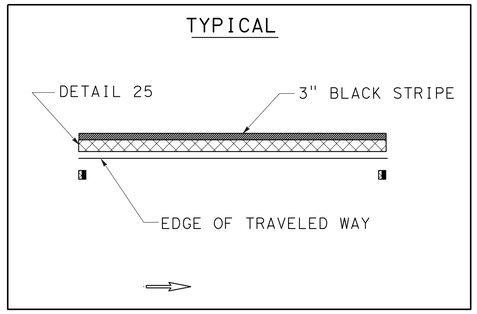

DETAIL 27B (Mod)

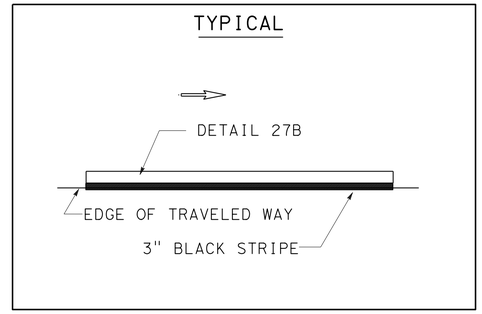

DETAIL 11/13

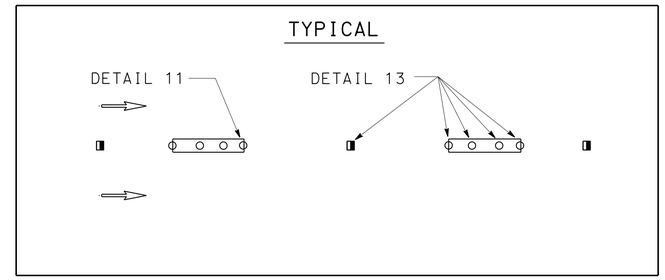

DETAIL 25A (6Mod)

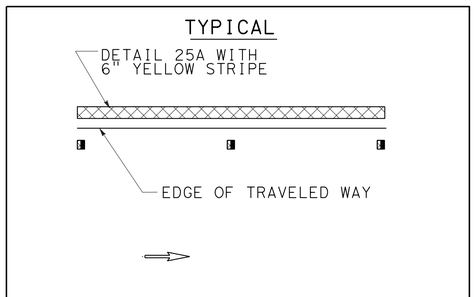

DETAIL 25 (6Mod)

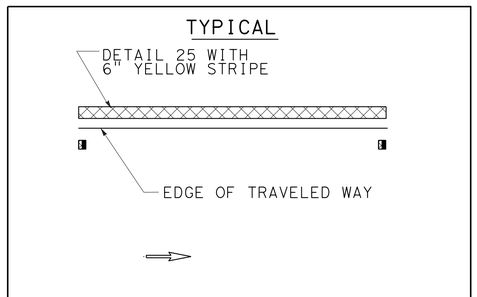

DETAIL 27B (6Mod)

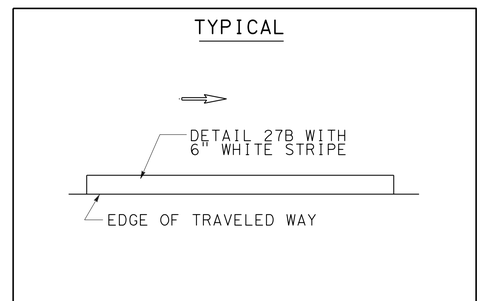

DETAIL 11/13 (6Mod)

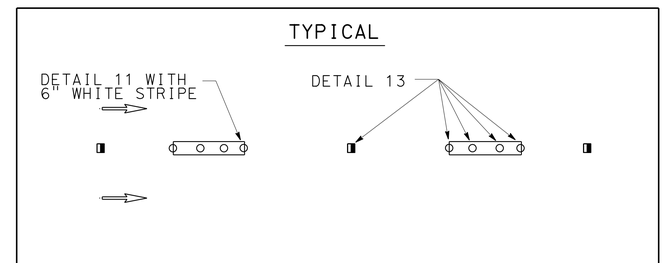

DETAIL 25A (6Mod Black)

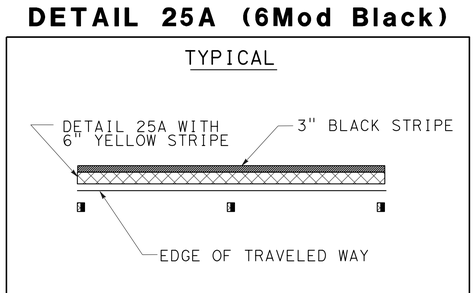

DETAIL 25 (6Mod Black)

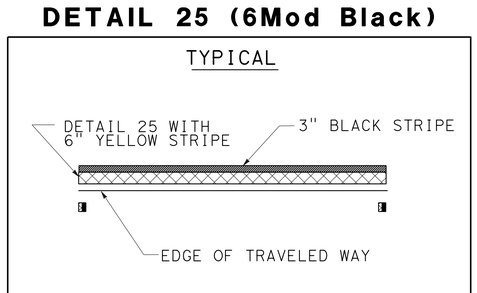

DETAIL 27B (6Mod Black)

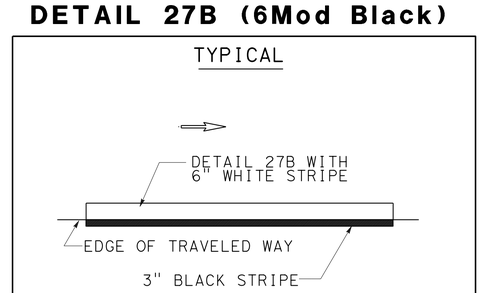

DETAIL 8/10

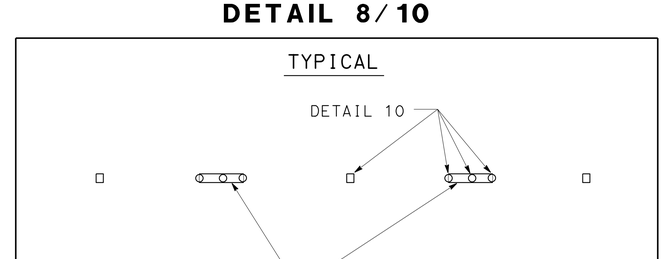

PAVEMENT DELINEATION DETAILS

NO SCALE

PDD-1

STATE OF CALIFORNIA - DEPARTMENT OF TRANSPORTATION
Caltrans®
TRAFFIC DESIGN

FUNCTIONAL SUPERVISOR: CAMILLE ABOU-FADEL
CALCULATED-DESIGNED BY: ROBERT EDEJER
CHECKED BY: SHAHIN ADIBI
REVISED BY
DATE REVISED

LAST REVISION 06-21-16
DATE PLOTTED => 04-OCT-2016
TIME PLOTTED => 11:29

Dist	COUNTY	ROUTE	POST MILES TOTAL PROJECT	SHEET No.	TOTAL SHEETS
11	SD	8	T0.5/R0.7	61	162

REGISTERED CIVIL ENGINEER 06-15-16 DATE

08-22-16
PLANS APPROVAL DATE

REGISTERED PROFESSIONAL ENGINEER SHAHIN T. ADIBI No. 54839 Exp. 6-30-18 CIVIL STATE OF CALIFORNIA

THE STATE OF CALIFORNIA OR ITS OFFICERS OR AGENTS SHALL NOT BE RESPONSIBLE FOR THE ACCURACY OR COMPLETENESS OF SCANNED COPIES OF THIS PLAN SHEET.

NOTES:

1. ALL PAVEMENT DELINEATION SHALL BE REPLACED IN KIND UNLESS INDICATED OTHERWISE.
2. ALL PAVEMENT DELINEATION SHALL BE REPLACED WITH THERMOPLASTIC (ENHANCED WET NIGHT VISIBILITY) TRAFFIC STRIPE.
3. ALL 4" STRIPE SHALL BE REPLACED WITH 6" STRIPE UNLESS INDICATED OTHERWISE.

PAVEMENT DELINEATION QUANTITIES

LOCATION						PAVEMENT MARKER				TRAFFIC STRIPE							REMARKS
ROUTE	Dir	FROM STATION	TO STATION	LINE	DETAIL	NON-REFLECTIVE (EA)	RETROREFLECTIVE (EA)			PAINT (LF)	THERMOPLASTIC (LF) (ENHANCED WET NIGHT VISIBILITY)						
						TYPE A	TYPE C	TYPE G	TYPE H	(1-COAT)	4" SOLID	4" BROKEN	6" SOLID	6" BROKEN	8" SOLID	8" BROKEN	
						WHITE	RED/CLEAR	CLEAR	YELLOW			(17-7)		(36-12)		(12-3)	
8	EB	31+10	33+50	"S33"	38			11							240		
8	EB	33+50	34+00	"S33"	38B			7							50		
8	EB	32+65	33+50	"S33"	38			5							85		
8	EB	31+10	46+69	"S33"	27B (6Mod)								1,559				
8	EB	32+80	42+70	"S33"	25A (6Mod)				43				990				
8	EB	42+70	46+69	"S33"	25 (6Mod)				10				399				
8	EB	34+00	46+69	"S33"	11/13 (6Mod)	106		28						1,269			
8	EB	75+69	102+00	"5VE1"	27B (6Mod)								2,631				
8	EB	75+69	102+43	"5VE1"	11/13 (6Mod)	223		57						2,674			
8	EB	75+69	102+26	"5VE1"	25 (6Mod)				57				2,657				
8	EB	102+00	102+76	"5VE1"	36B			5							152		2 x LENGTH
8	EB	102+00	103+16	"5VE1"	27B (6Mod)								116				
8	EB	102+00	103+00	"5VE1"	8/10	13		4				100					
8	EB	102+76	106+50	"5VE1"	36B			17							748		2 x LENGTH
8	EB	102+43	105+22	"5VE1"	11/13 (6Mod)	24		7						279			MIDWAY Dr UC
8	EB	102+26	105+04	"5VE1"	25 (6Mod Black)				7	278			278				MIDWAY Dr UC
8	EB	103+16	105+70	"5VE1"	27B (6Mod Black)					254			254				MIDWAY Dr UC
8	EB	103+00	105+28	"5VE1"	8/10	29		6				228					MIDWAY Dr UC
8	EB	105+70	106+22	"5VE1"	27B (6Mod Black)					52			52				
8	EB	105+04	151+50	"5VE1"	25 (6Mod)				98				4,646				
8	EB	105+22	161+94	"5VE1"	11/13 (6Mod)	473		120						5,672			
8	EB	106+50	150+25	"5VE1"	11/13 (6Mod)	365		93						4,375			
8	EB	151+50	161+94	"5VE1"	25 (6Mod)				23				1,044				
8	EB	106+22	113+00	"5VE1"	27B (6Mod)								678				
8	EB	113+00	117+00	"5VE1"	36A			18							800		2 x LENGTH
8	EB	117+00	119+10	"5VE1"	8/10	27		6				210					
8	EB	119+10	129+10	"5VE1"	11/13 (6Mod)	84		22						1,000			
8	EB	129+10	145+25	"5VE1"	37		8	102								1,615	
8	EB	145+25	150+00	"5VE1"	38			21							475		
8	EB	113+00	150+88	"5VE1"	27B (6Mod)								3,788				
8	EB	148+40	150+88	"5VE1"	36			12							248		
8	EB	148+40	151+40	"5VE1"	36			14							300		
8	EB	151+40	161+94	"5VE1"	27B (6Mod)								1,054				
8	EB	161+94	172+40	"5VE1"	27B (6Mod Black)					1,046			1,046				BRIDGE
8	EB	161+94	168+68	"5VE1"	25A (6Mod Black)				30	674			674				BRIDGE
8	EB	168+68	171+60	"5VE1"	36B			14							292		BRIDGE
8	EB	171+60	172+40	"5VE1"	38B			9							80		BRIDGE
8	EB	161+94	165+40	"5VE1"	11/13 (6Mod)	29		9						346			BRIDGE
					SUBTOTAL	1,373	8	586	268	2,304		538	21,866	15,615	3,470	1,615	
					TOTAL 1	1,373		862		2,304		538	21,866	15,615	3,470	1,615	

STATE OF CALIFORNIA - DEPARTMENT OF TRANSPORTATION
Caltrans® TRAFFIC DESIGN

FUNCTIONAL SUPERVISOR: CAMILLE ABOU FADEL
CALCULATED-DESIGNED BY: ROBERT EDEJER
CHECKED BY: SHAHIN ADIBI
REVISED BY
DATE REVISED

PAVEMENT DELINEATION QUANTITIES

PDQ-1

Dist	COUNTY	ROUTE	POST MILES TOTAL PROJECT	SHEET No.	TOTAL SHEETS
11	SD	8	T0.5/R0.7	62	162

REGISTERED CIVIL ENGINEER 06-15-16 DATE

08-22-16
PLANS APPROVAL DATE

REGISTERED PROFESSIONAL ENGINEER SHAHIN T. ADIBI No. 54839 Exp. 6-30-18 CIVIL STATE OF CALIFORNIA

THE STATE OF CALIFORNIA OR ITS OFFICERS OR AGENTS SHALL NOT BE RESPONSIBLE FOR THE ACCURACY OR COMPLETENESS OF SCANNED COPIES OF THIS PLAN SHEET.

PAVEMENT DELINEATION QUANTITIES

LOCATION						PAVEMENT MARKER				TRAFFIC STRIPE							REMARKS
ROUTE	Dir	FROM STATION	TO STATION	LINE	DETAIL	NON-REFLECTIVE (EA)	RETROREFLECTIVE (EA)			PAINT (LF)	THERMOPLASTIC (LF) (ENHANCED WET NIGHT VISIBILITY)						
						TYPE A	TYPE C	TYPE G	TYPE H	(1-COAT)	4" SOLID	4" BROKEN	6" SOLID	6" BROKEN	8" SOLID	8" BROKEN	
						WHITE	RED/CLEAR	CLEAR	YELLOW			(17-7)		(36-12)		(12-3)	
8	EB	137+08	143+36	"2E1"	25 (6Mod Black)				15	628			628				SB Rte 5 Conn (BRIDGE)
8	EB	137+08	143+36	"2E1"	11/13 (6Mod)	53		15						628			SB Rte 5 Conn (BRIDGE)
8	EB	137+08	139+85	"2E1"	27B (6Mod)								277				SB Rte 5 Conn (BRIDGE)
8	EB	139+85	142+56	"2E1"	36B			13							271		SB Rte 5 Conn (BRIDGE)
8	EB	143+36	144+37	"2E1"	25 (6Mod)				4				101				
8	EB	143+36	144+37	"2E1"	11/13 (6Mod)	9		4						101			
8	EB	143+36	144+37	"2E1"	27B (6Mod Black)					101			101				
8	EB	143+36	143+56	"2E1"	38B			4							20		
8	EB	143+56	144+37	"2E1"	11/13 (6Mod)	7		3						81			
8	EB	144+37	147+34	"11SD8"	27B (6Mod Black)					297			297				
8	EB	147+34	149+38	"11SD8"	27B (6Mod)								204				
8	EB	149+38	152+36	"11SD8"	36B			14							596		2 x LENGTH
8	EB	144+37	152+37	"11SD8"	11/13 (6Mod)	67		18						800			
8	EB	144+37	152+39	"11SD8"	11/13 (6Mod)	67		18						802			
8	EB	144+37	152+41	"11SD8"	25 (6Mod)				18				804				
8	EB	143+27	144+37	"2E1"	25 (6Mod Black)				4	110			110				FROM ROSECRANS St
8	EB	143+27	144+37	"2E1"	11/13 (6Mod)	10		4						110			FROM ROSECRANS St
8	EB	143+27	144+37	"2E1"	27B (6Mod)								110				FROM ROSECRANS St
8	EB	143+81	144+37	"2E1"	38			4							56		FROM ROSECRANS St
8	EB	144+37	149+38	"11SD8"	25 (6Mod Black)				12	501			501				FROM ROSECRANS St
8	EB	144+37	152+33	"11SD8"	11/13 (6Mod)	67		18						796			FROM ROSECRANS St
8	EB	144+37	152+31	"11SD8"	27B (6Mod)								794				FROM ROSECRANS St
8	EB	144+37	148+60	"11SD8"	38			19							423		FROM ROSECRANS St
8	EB	152+36	152+74	"11SD8"	36B			3							76		MORENA Blvd UC
8	EB	152+37	153+77	"11SD8"	11/13 (6Mod)	12		4						140			MORENA Blvd UC
8	EB	152+39	153+80	"11SD8"	11/13 (6Mod)	12		4						141			MORENA Blvd UC
8	EB	152+41	153+82	"11SD8"	25 (6Mod)				4				141				MORENA Blvd UC
8	EB	152+74	153+76	"11SD8"	11/13 (6Mod)	9		4						102			MORENA Blvd UC
8	EB	152+31	153+71	"11SD8"	27B (6Mod)								140				MORENA Blvd UC
8	EB	153+82	169+47	"11SD8"	25 (6Mod)				34				1,565				
8	EB	153+77	169+47	"11SD8"	11/13 (6Mod)	131		34						1,570			
8	EB	153+80	169+47	"11SD8"	11/13 (6Mod)	131		34						1,567			
8	EB	153+76	169+47	"11SD8"	11/13 (6Mod)	131		34						1,571			
8	EB	153+76	169+47	"11SD8"	11/13 (6Mod)	131		34						1,571			
8	EB	153+71	169+47	"11SD8"	27B (6Mod)								1,576				
8	EB	158+86	161+23	"11SD8"	36B			21							474		2 x LENGTH
8	EB	161+23	168+23	"11SD8"	37		8	41								700	
8	EB	168+23	169+47	"11SD8"	38			7							124		
					SUBTOTAL	837	8	353	91	1,637			7,349	9,980	2,040	700	
					TOTAL 2	837		452		1,637			7,349	9,980	2,040	700	

STATE OF CALIFORNIA - DEPARTMENT OF TRANSPORTATION
Caltrans® TRAFFIC DESIGN

FUNCTIONAL SUPERVISOR: CAMILLE ABOU FADEL
CALCULATED-DESIGNED BY: ROBERT EDEJER
CHECKED BY: SHAHIN ADIBI
REVISED BY
DATE REVISED

PAVEMENT DELINEATION QUANTITIES
PDQ-2

LAST REVISION 06-21-16 | DATE PLOTTED => 04-OCT-2016 | TIME PLOTTED => 11:29

Dist	COUNTY	ROUTE	POST MILES TOTAL PROJECT	SHEET No.	TOTAL SHEETS
11	SD	8	T0.5/R0.7	63	162

REGISTERED CIVIL ENGINEER 06-15-16 DATE

08-22-16
PLANS APPROVAL DATE

REGISTERED PROFESSIONAL ENGINEER SHAHIN T. ADIBI No. 54839 Exp. 6-30-18 CIVIL STATE OF CALIFORNIA

THE STATE OF CALIFORNIA OR ITS OFFICERS OR AGENTS SHALL NOT BE RESPONSIBLE FOR THE ACCURACY OR COMPLETENESS OF SCANNED COPIES OF THIS PLAN SHEET.

PAVEMENT DELINEATION QUANTITIES

LOCATION						PAVEMENT MARKER				TRAFFIC STRIPE							REMARKS
ROUTE	Dir	FROM STATION	TO STATION	LINE	DETAIL	NON-REFLECTIVE (EA)	RETROREFLECTIVE (EA)			PAINT (LF)	THERMOPLASTIC (LF) (ENHANCED WET NIGHT VISIBILITY)						
						TYPE A	TYPE C	TYPE G	TYPE H	(1-COAT)	4" SOLID	4" BROKEN	6" SOLID	6" BROKEN	8" SOLID	8" BROKEN	
						WHITE	RED/CLEAR	CLEAR	YELLOW			(17-7)		(36-12)		(12-3)	
8	WB	169+47	154+10	"11SD8"	27B (6Mod)								1,537				
8	WB	166+66	163+92	"11SD8"	36			25							548		2 x LENGTH
8	WB	169+47	157+30	"11SD8"	11/13 (6Mod)	102		27						1,217			
8	WB	157+30	154+07	"11SD8"	38B			29							323		
8	WB	169+47	166+76	"11SD8"	11/13 (6Mod)	23		7						271			
8	WB	166+76	156+55	"11SD8"	37		8	63								1,021	
8	WB	156+55	155+28	"11SD8"	38B			13							127		
8	WB	155+28	154+04	"11SD8"	36			13							248		2 x LENGTH
8	WB	169+47	157+00	"11SD8"	11/13 (6Mod)	104		27						1,247			
8	WB	157+00	154+00	"11SD8"	37		8	14								300	
8	WB	169+47	153+98	"11SD8"	11/13 (6Mod)	130		34						1,549			
8	WB	169+47	153+97	"11SD8"	25 (6Mod)				34				1,550				
8	WB	154+10	152+50	"11SD8"	27B (6Mod Black)					160			160				MORENA Blvd UC
8	WB	154+07	152+48	"11SD8"	38B			16							159		MORENA Blvd UC
8	WB	154+04	152+41	"11SD8"	36			15							326		MORENA Blvd UC
8	WB	154+00	153+00	"11SD8"	37		8	1								100	MORENA Blvd UC
8	WB	153+00	152+40	"11SD8"	38B			7							60		MORENA Blvd UC
8	WB	153+98	152+38	"11SD8"	11/13 (6Mod)	14		5						160			MORENA Blvd UC
8	WB	153+97	152+36	"11SD8"	25 (6Mod Black)				5	161			161				MORENA Blvd UC
8	WB	152+41	151+30	"11SD8"	36			11							222		NB Rte 5 Conn (2 x LENGTH)
8	WB	151+30	144+37	"11SD8"	27B (6Mod)								693				NB Rte 5 Conn
8	WB	144+30	143+35	"W"	27B (6Mod)								95				NB Rte 5 Conn
8	WB	150+35	144+37	"11SD8"	11/13 (6Mod)	50		14						598			NB Rte 5 Conn
8	WB	144+30	143+36	"W"	11/13 (6Mod)	8		3						94			NB Rte 5 Conn
8	WB	152+40	150+00	"11SD8"	38B			22							240		
8	WB	150+00	144+37	"11SD8"	36			49							1,126		NB Rte 5 Conn
8	WB	144+30	143+36	"W"	36			9							188		NB Rte 5 Conn
8	WB	152+38	144+37	"11SD8"	11/13 (6Mod)	67		18						801			
8	WB	144+30	143+38	"W"	11/13 (6Mod)	8		3						92			
8	WB	153+97	144+37	"11SD8"	25 (6Mod Black)				21	960			960				
8	WB	144+30	143+40	"W"	25 (6Mod Black)				3	90			90				
8	WB	143+35	141+74	"W"	27B (6Mod Black)					161			161				NB Rte 5 Conn (BRIDGE)
8	WB	143+36	141+74	"W"	11/13 (6Mod)	14		5						162			NB Rte 5 Conn (BRIDGE)
8	WB	143+36	141+74	"W"	36			15							324		NB Rte 5 Conn (BRIDGE)
8	WB	143+38	132+73	"W"	11/13 (6Mod)	89		24						1,065			BRIDGE
8	WB	143+40	132+77	"W"	25 (6Mod Black)				24	1,063			1,063				BRIDGE
8	WB	141+74	141+70	"W"	27B (6Mod Black)					4			4				BRIDGE
8	WB	132+73	121+82	"W"	11/13 (6Mod)	91		24						1,091			
					SUBTOTAL	700	24	493	87	2,599			6,474	8,347	3,891	1,421	
					TOTAL 3	700		604		2,599			6,474	8,347	3,891	1,421	

PAVEMENT DELINEATION QUANTITIES

PDQ-3

STATE OF CALIFORNIA - DEPARTMENT OF TRANSPORTATION
Caltrans® TRAFFIC DESIGN

FUNCTIONAL SUPERVISOR: CAMILLE ABOU FADEL
CALCULATED-DESIGNED BY: ROBERT EDEJER
CHECKED BY: SHAHIN ADIBI
REVISED BY
DATE REVISED

LAST REVISION 06-21-16 | DATE PLOTTED => 04-OCT-2016 | TIME PLOTTED => 11:29

Dist	COUNTY	ROUTE	POST MILES TOTAL PROJECT	SHEET No.	TOTAL SHEETS
11	SD	8	T0.5/R0.7	64	162

REGISTERED CIVIL ENGINEER 06-15-16 DATE

08-22-16
PLANS APPROVAL DATE

REGISTERED PROFESSIONAL ENGINEER SHAHIN T. ADIBI No. 54839 Exp. 6-30-18 CIVIL STATE OF CALIFORNIA

THE STATE OF CALIFORNIA OR ITS OFFICERS OR AGENTS SHALL NOT BE RESPONSIBLE FOR THE ACCURACY OR COMPLETENESS OF SCANNED COPIES OF THIS PLAN SHEET.

PAVEMENT DELINEATION QUANTITIES

LOCATION						PAVEMENT MARKER				TRAFFIC STRIPE							REMARKS
ROUTE	Dir	FROM STATION	TO STATION	LINE	DETAIL	NON-REFLECTIVE (EA)	RETROREFLECTIVE (EA)			PAINT (LF)	THERMOPLASTIC (LF) (ENHANCED WET NIGHT VISIBILITY)						
						TYPE A	TYPE C	TYPE G	TYPE H	(1-COAT)	4" SOLID	4" BROKEN	6" SOLID	6" BROKEN	8" SOLID	8" BROKEN	
						WHITE	RED/CLEAR	CLEAR	YELLOW			(17-7)		(36-12)		(12-3)	
8	WB	141+70	121+82	"W"	27B (6Mod)								1,988				
8	WB	132+77	126+47	"W"	25 (6Mod)				15				630				
8	WB	126+47	121+82	"W"	36B			21							930		NB Rte 5 Conn (2 x LENGTH)
8	WB	126+47	121+82	"W"	25A (6Mod)				21				465				NB Rte 5 Conn
8	WB	126+47	121+82	"W"	11/13 (6Mod)	39		11						465			NB Rte 5 Conn
8	WB	121+82	121+64	"5VW1"	36B			2							36		NB Rte 5 Conn (2 x LENGTH)
8	WB	121+82	121+64	"5VW1"	25A (6Mod)				2				18				NB Rte 5 Conn
8	WB	121+64	75+25	"5VW1"	25 (6Mod)				98				4,639				
8	WB	121+82	75+09	"5VW1"	11/13 (6Mod)	390		99						4,673			
8	WB	121+64	85+70	"5VW1"	11/13 (6Mod)	300		76						3,594			
8	WB	121+82	116+05	"5VW1"	11/13 (6Mod)	49		14						577			
8	WB	100+00	89+10	"5VW1"	11/13 (6Mod)	91		24						1,090			
8	WB	116+05	92+87	"5VW1"	37		8	149								2,318	
8	WB	92+87	88+86	"5VW1"	38B			70							802		2 x LENGTH
8	WB	88+86	84+66	"5VW1"	36			37							840		
8	WB	121+82	74+96	"5VW1"	27B (6Mod)								4,686				
8	WB	74+96	72+15	"5VW1"	27B (6Mod Black)					281			281				W MISSION BAY Dr UC
8	WB	75+25	72+51	"5VW1"	25 (6Mod Black)				7	274			274				W MISSION BAY Dr UC
8	WB	75+09	72+34	"5VW1"	11/13 (6Mod)	23		7						275			W MISSION BAY Dr UC
8	WB	72+15	46+71	"5VW1"	27B (6Mod)								2,544				
8	WB	72+51	46+71	"5VW1"	25 (6Mod)				55				2,580				
8	WB	72+34	46+71	"5VW1"	11/13 (6Mod)	214		55						2,563			
8	WB	46+71	37+14	"S32"	27B (6Mod)								957				
8	WB	46+71	36+87	"S32"	25 (6Mod)				22				984				
8	WB	46+71	37+85	"S32"	11/13 (6Mod)	74		20						886			
8	WB	37+85	36+87	"S32"	11/13 (6Mod)	9		4						98			
8	WB	36+96	37+30	"S32"	36			5							68		
8	WB	29+18	29+27	"B5"	38A										9		NB SUNSET CLIFFS Blvd ISLAND
8	EB	63+43	73+03	"M5"	27B						960						SB MISSION BAY Dr ON-RAMP
8	EB	63+43	64+33	"M5"	38B			10							90		SB MISSION BAY Dr ON-RAMP
8	EB	64+43	73+03	"M5"	8/10	108		19				860					SB MISSION BAY Dr ON-RAMP
8	EB	64+07	64+42	"M5"	38			3							35		SB MISSION BAY Dr ON-RAMP
8	EB	64+52	64+88	"M5"	38			3							36		SB MISSION BAY Dr ON-RAMP
8	EB	64+88	73+03	"M5"	25A				35		815						SB MISSION BAY Dr ON-RAMP
8	EB	77+61	78+03	"M1AAB1"	38			3							42		SB MISSION BAY Dr ON-RAMP
8	EB	77+61	77+96	"M1AAB1"	27B						35						SB MISSION BAY Dr ON-RAMP
8	EB	77+88	78+10	"M1AAB1"	38A										22		SB MISSION BAY Dr ON-RAMP
					SUBTOTAL	1,297	8	631	255	555	1,810	860	20,046	14,221	2,910	2,318	
					TOTAL 4	1,297		894		555	1,810	860	20,046	14,221	2,910	2,318	

STATE OF CALIFORNIA - DEPARTMENT OF TRANSPORTATION
Caltrans® TRAFFIC DESIGN

FUNCTIONAL SUPERVISOR: CAMILLE ABOU FADEL
CALCULATED-DESIGNED BY: SHAHIN ADIBI
CHECKED BY: ROBERT EDEJER
REVISED BY
DATE REVISED

PAVEMENT DELINEATION QUANTITIES

PDQ-4

LAST REVISION 06-21-16
DATE PLOTTED => 04-OCT-2016
TIME PLOTTED => 11:29

Dist	COUNTY	ROUTE	POST MILES TOTAL PROJECT	SHEET No.	TOTAL SHEETS
11	SD	8	T0.5/R0.7	65	162

REGISTERED CIVIL ENGINEER 06-15-16 DATE

08-22-16
PLANS APPROVAL DATE

REGISTERED PROFESSIONAL ENGINEER SHAHIN T. ADIBI No. 54839 Exp. 6-30-18 CIVIL STATE OF CALIFORNIA

THE STATE OF CALIFORNIA OR ITS OFFICERS OR AGENTS SHALL NOT BE RESPONSIBLE FOR THE ACCURACY OR COMPLETENESS OF SCANNED COPIES OF THIS PLAN SHEET.

PAVEMENT DELINEATION QUANTITIES

LOCATION						PAVEMENT MARKER				TRAFFIC STRIPE							REMARKS
ROUTE	Dir	FROM STATION	TO STATION	LINE	DETAIL	NON-REFLECTIVE (EA)	RETROREFLECTIVE (EA)			PAINT (LF)	THERMOPLASTIC (LF) (ENHANCED WET NIGHT VISIBILITY)						
						TYPE A	TYPE C	TYPE G	TYPE H	(1-COAT)	4" SOLID	4" BROKEN	6" SOLID	6" BROKEN	8" SOLID	8" BROKEN	
						WHITE	RED/CLEAR	CLEAR	YELLOW			(17-7)		(36-12)		(12-3)	
8	EB	06+73	06+89	"M34"	38A										16		SB MISSION BAY Dr ON-RAMP
8	EB	78+06	80+00	"M1AAB1"	27B						194						NB MISSION BAY Dr ON-RAMP
8	EB	78+16	80+00	"M1AAB1"	8/10	23		5				184					NB MISSION BAY Dr ON-RAMP
8	EB	78+22	78+79	"M1AAB1"	25A				4		57						NB MISSION BAY Dr ON-RAMP
8	EB	78+79	80+00	"M1AAB1"	38			7							121		NB MISSION BAY Dr ON-RAMP
8	EB	77+72	78+04	"M1AB1"	27B						32						NB MISSION BAY Dr ON-RAMP
8	EB	78+14	79+14	"M1AB1"	27B						100						NB MISSION BAY Dr ON-RAMP
8	EB	77+72	77+90	"M1AB1"	38			2							18		NB MISSION BAY Dr ON-RAMP
8	EB	78+00	84+00	"M1AB1"	25A				26		600						NB MISSION BAY Dr ON-RAMP
8	EB	83+00	83+48	"M1AB1"	38			3							48		NB MISSION BAY Dr ON-RAMP
8	EB	80+00	85+90	"M1AB1"	8/10	74		14				590					NB MISSION BAY Dr ON-RAMP
8	EB	80+00	84+00	"M1AB1"	27B						400						NB MISSION BAY Dr ON-RAMP
8	EB	121+00	127+15	"SD8S1"	11/13 (6Mod)	52		14						615			SB Rte 5 Conn
8	EB	121+88	137+55	"SD8S1"	25A (6Mod Black)				67	1,567			1,567				SB Rte 5 Conn
8	EB	121+88	127+15	"SD8S1"	27B (6Mod)								527				SB Rte 5 Conn
8	EB	127+15	133+15	"SD8S1"	27B (6Mod Black)					600			600				SB Rte 5 Conn
8	EB	134+40	137+55	"SD8S1"	11/13 (6Mod)	27		8						315			SB Rte 5 Conn
8	EB	134+40	137+55	"SD8S1"	27B (6Mod)								315				SB Rte 5 Conn
8	WB	50+80	59+74	"S2"	27B (6Mod)								894				SB Rte 5 Conn
8	WB	52+80	59+74	"S2"	25A (6Mod)				30				694				SB Rte 5 Conn
8	WB	50+80	52+80	"S2"	11/13 (6Mod)	17		6						200			SB Rte 5 Conn
8	EB	134+87	147+50	"N3"	27B (6Mod)								1,263				NB Rte 5 Conn FROM ROSECRANS St
8	EB	134+91	142+83	"N3"	25A (6Mod Black)				34	792			792				NB Rte 5 Conn FROM ROSECRANS St
8	EB	142+83	145+20	"N3"	36A			11							237		NB Rte 5 Conn FROM ROSECRANS St
8	EB	145+20	146+86	"N3"	8/10	21		5				166					NB Rte 5 Conn FROM ROSECRANS St
8	WB	153+23	135+76	"5VS3"	27B (6Mod)								1,747				NB Rte 5 Conn
8	WB	153+23	135+63	"5VS3"	11/13 (6Mod)	147		38						1,760			NB Rte 5 Conn
8	WB	153+23	135+70	"5VS3"	25A (6Mod Black)				75	1,753			1,753				NB Rte 5 Conn
8	WB	150+05	145+38	"5VS3"	36			41							934		NB Rte 5 Conn (2 x LENGTH)
8	WB	135+76	132+90	"5VS3"	27B (6Mod Black)					286			286				NB Rte 5 Conn OC (BRIDGE-FREEWAY 5)
8	WB	135+63	132+95	"5VS3"	11/13 (6Mod)	23		7						268			NB Rte 5 Conn OC (BRIDGE-FREEWAY 5)
8	WB	135+70	133+00	"5VS3"	25A (6Mod Black)				13	270			270				NB Rte 5 Conn OC (BRIDGE-FREEWAY 5)
8	WB	132+90	126+44	"5VS3"	27B (6Mod)								646				NB Rte 5 Conn
8	WB	132+95	126+44	"5VS3"	11/13 (6Mod)	55		15						651			NB Rte 5 Conn
8	WB	133+00	126+44	"5VS3"	25A (6Mod)				29				656				NB Rte 5 Conn
8	EB	131+80	133+32	"S4_A"	27B (6Mod)								152				NB Rte 5 Conn
8	EB	131+80	133+32	"S4_A"	25A (6Mod)				8				152				NB Rte 5 Conn
8	EB	133+32	140+08	"S4_A"	27B (6Mod Black)					676			676				NB Rte 5 Conn OC (BRIDGE-RAILROAD)
					SUBTOTAL	439		176	286	5,944	1,383	940	12,990	3,809	1,374		
					TOTAL 5	439		462		5,944	1,383	940	12,990	3,809	1,374		

PAVEMENT DELINEATION QUANTITIES

PDQ-5

STATE OF CALIFORNIA - DEPARTMENT OF TRANSPORTATION
Caltrans® TRAFFIC DESIGN

FUNCTIONAL SUPERVISOR: CAMILLE ABOU FADEL
CALCULATED-DESIGNED BY: ROBERT EDEJER
CHECKED BY: SHAHIN ADIBI
REVISED BY
DATE REVISED

LAST REVISION 06-21-16 | DATE PLOTTED => 04-OCT-2016 | TIME PLOTTED => 11:29

Dist	COUNTY	ROUTE	POST MILES TOTAL PROJECT	SHEET No.	TOTAL SHEETS
11	SD	8	T0.5/R0.7	66	162

REGISTERED CIVIL ENGINEER 06-15-16 DATE

08-22-16
PLANS APPROVAL DATE

REGISTERED PROFESSIONAL ENGINEER SHAHIN T. ADIBI No. 54839 Exp. 6-30-18 CIVIL STATE OF CALIFORNIA

THE STATE OF CALIFORNIA OR ITS OFFICERS OR AGENTS SHALL NOT BE RESPONSIBLE FOR THE ACCURACY OR COMPLETENESS OF SCANNED COPIES OF THIS PLAN SHEET.

PAVEMENT DELINEATION QUANTITIES

LOCATION						PAVEMENT MARKER				TRAFFIC STRIPE							REMARKS
ROUTE	Dir	FROM STATION	TO STATION	LINE	DETAIL	NON-REFLECTIVE (EA)	RETROREFLECTIVE (EA)			PAINT (LF)	THERMOPLASTIC (LF) (ENHANCED WET NIGHT VISIBILITY)						
						TYPE A	TYPE C	TYPE G	TYPE H	(1-COAT)	4" SOLID	4" BROKEN	6" SOLID	6" BROKEN	8" SOLID	8" BROKEN	
						WHITE	RED/CLEAR	CLEAR	YELLOW			(17-7)		(36-12)		(12-3)	
8	EB	133+32	140+08	"S4_A"	25A (6Mod Black)				30	676			676				NB Rte 5 Conn OC (BRIDGE-RAILROAD)
8	EB	140+08	148+93	"S4_A"	27B (6Mod)								885				NB Rte 5 Conn
8	EB	140+08	148+98	"S4_A"	25A (6Mod Black)				39	890			890				NB Rte 5 Conn
8	EB	147+00	147+84	"S4_A"	36B			5							168		NB Rte 5 Conn (2 x LENGTH)
8	EB	147+84	148+96	"S4_A"	37		8	2									NB Rte 5 Conn
8	EB	148+98	150+36	"S4_A"	25A (6Mod Black)				7	138			138				NB Rte 5 Conn OC (BRIDGE-MORENA Blvd)
8	EB	148+96	150+34	"S4_A"	37		8	4									NB Rte 5 Conn OC (BRIDGE-MORENA Blvd)
8	EB	148+93	150+31	"S4_A"	27B (6Mod Black)					138			138				NB Rte 5 Conn OC (BRIDGE-MORENA Blvd)
8	EB	150+36	155+60	"S4_A"	25A (6Mod Black)				23	524			524				NB Rte 5 Conn
8	EB	150+31	155+60	"S4_A"	27B (6Mod)								529				NB Rte 5 Conn
8	EB	150+34	151+23	"S4_A"	37		6	2									NB Rte 5 Conn
8	EB	151+23	152+15	"S4_A"	36			9							184		NB Rte 5 Conn (2 x LENGTH)
8	EB	143+60	144+58	"M3"	27B						98						SB MORENA Blvd ON-RAMP
8	EB	144+27	144+58	"M3"	36			3							31		SB MORENA Blvd ON-RAMP
8	EB	144+67	150+33	"M3"	27B						566						SB MORENA Blvd ON-RAMP
8	EB	144+67	150+33	"M3"	25A (Mod)				25	566	566						SB MORENA Blvd ON-RAMP
8	EB	155+48	161+12	"M6"	27B						564						NB MORENA Blvd OFF-RAMP
8	EB	155+48	161+12	"M6"	25A				25		564						NB MORENA Blvd OFF-RAMP
8	WB	163+77	154+95	"M1"	25A				38		882						NB MORENA Blvd OFF-RAMP
8	WB	163+77	155+09	"M1"	27B						868						NB MORENA Blvd OFF-RAMP
SUBTOTAL							22	25	187	2,932	4,108		3,780		383	339	
TOTAL 6							234			2,932	4,108		3,780		383	339	
TOTAL 5						439	462			5,944	1,383	940	12,990	3,809	1,374		
TOTAL 4						1,297	894			555	1,810	860	20,046	14,221	2,910	2,318	
TOTAL 3						700	604			2,599			6,474	8,347	3,891	1,421	
TOTAL 2						837	452			1,637			7,349	9,980	2,040	700	
TOTAL 1						1,373	862			2,304		538	21,866	15,615	3,470	1,615	
GRAND TOTAL						4,646*	3,582			15,971	7,301	2,338	72,505	51,972	14,068	6,393	

* - SEE "Q" SHEETS FOR ADDITIONAL QUANTITIES.

PAVEMENT DELINEATION QUANTITIES

PDQ-6

REVISED BY | DATE REVISED

ROBERT EDEJER | SHAHIN ADIBI

CALCULATED-DESIGNED BY | CHECKED BY

FUNCTIONAL SUPERVISOR: CAMILLE ABOU FADEL

STATE OF CALIFORNIA - DEPARTMENT OF TRANSPORTATION

Caltrans® TRAFFIC DESIGN

LAST REVISION 06-21-16 | DATE PLOTTED => 04-OCT-2016 | TIME PLOTTED => 11:29

Dist	COUNTY	ROUTE	POST MILES TOTAL PROJECT	SHEET No.	TOTAL SHEETS
11	SD	8	T0.5/R0.7	67	162

REGISTERED CIVIL ENGINEER 06-15-16 DATE

08-22-16
PLANS APPROVAL DATE

REGISTERED PROFESSIONAL ENGINEER SHAHIN T. ADIBI No. 54839 Exp. 6-30-18 CIVIL STATE OF CALIFORNIA

THE STATE OF CALIFORNIA OR ITS OFFICERS OR AGENTS SHALL NOT BE RESPONSIBLE FOR THE ACCURACY OR COMPLETENESS OF SCANNED COPIES OF THIS PLAN SHEET.

THERMOPLASTIC PAVEMENT MARKING (ENHANCED WET NIGHT VISIBILITY)

LOCATION						TYPE I-24'	TYPE III (L)	TYPE III (B)	TYPE V	TYPE VI	DIAMOND SYMBOL	SIGNAL	AHEAD	STOP	12" LIMIT LINE	1' BASIC CROSS-WALK
ROUTE	Dir	FROM STATION	TO STATION	LINE	DESCRIPTION	SQFT	SQFT	SQFT	SQFT	SQFT	SQFT	SQFT	SQFT	SQFT	SQFT	SQFT
8	EB	32+50	34+50	"S33"	NIMITZ Blvd ON-RAMP	124										
8	EB	64+00	73+00	"M5"	SB SPORT ARENA Blvd ON-RAMP	62									27	
8	EB	77+50	83+50	"M1AAB1"	NB SPORT ARENA Blvd ON-RAMP	93					33				36	118
8	EB	121+00	125+10	"SD8S1"	SB 5 CONNECTOR					126						
8	EB	149+50	152+00	"5VE1"	MAINLANE					126						
8	EB	161+50	165+50	"5VE1"	MAINLANE					126	33					
8	EB	261+00	265+50	"E-4"	CAMINO DEL RIO W ON-RAMP										36	
8	EB	144+00	145+70	"M3"	SB MORENA Blvd ON-RAMP	31										36
8	EB	160+70	161+25	"M6"	NB MORENA Blvd OFF-RAMP				33							42
8	WB	89+00	84+20	"5VW1"	MAINLANE					126						
8	WB	46+00	45+30	"S32"	MAINLANE							64	62			
8	WB	46+00	45+30	"S32"	MAINLANE											
8	WB	46+00	45+30	"S32"	MAINLANE											
8	WB	41+40	41+16	"S32"	MAINLANE				66							
8	WB	39+40	36+80	"S32"	MAINLANE - END FREEWAY	31	126	73						22	50	
					SUBTOTAL	341	126	73	99	504	66	64	62	22	149	196
					TOTAL	1,702										

REMOVE THERMOPLASTIC PAVEMENT MARKING

LOCATION						TYPE VI
ROUTE	Dir	FROM STATION	TO STATION	LINE	DESCRIPTION	SQFT
8	EB	149+50	152+00	"5VE1"	MAINLANE- BRIDGE	126
8	EB	161+50	165+50	"5VE1"	MAINLANE- BRIDGE	126
8	WB	84+00	89+00	"5VW1"	MAINLANE	126
					TOTAL	378*

* - SEE "THQ" SHEETS FOR ADDITIONAL QUANTITIES.

PAVEMENT DELINEATION QUANTITIES

PDQ-7

REVISED BY | DATE REVISED

ROBERT EDEJER | SHAHIN ADIBI

CALCULATED-DESIGNED BY | CHECKED BY

FUNCTIONAL SUPERVISOR: CAMILLE ABOU FADEL

STATE OF CALIFORNIA - DEPARTMENT OF TRANSPORTATION

Caltrans® TRAFFIC DESIGN

LAST REVISION 06-21-16 | DATE PLOTTED => 04-OCT-2016 | TIME PLOTTED => 11:30

Dist	COUNTY	ROUTE	POST MILES TOTAL PROJECT	SHEET No.	TOTAL SHEETS
11	SD	8	T0.5/R0.7	68	162

REGISTERED CIVIL ENGINEER 06-15-16 DATE

08-22-16
PLANS APPROVAL DATE

REGISTERED PROFESSIONAL ENGINEER SHAHIN T. ADIBI No. 54839 Exp. 6-30-18 CIVIL STATE OF CALIFORNIA

THE STATE OF CALIFORNIA OR ITS OFFICERS OR AGENTS SHALL NOT BE RESPONSIBLE FOR THE ACCURACY OR COMPLETENESS OF SCANNED COPIES OF THIS PLAN SHEET.

REMOVE PAVEMENT MARKER (N)

ROUTE	Dir	FROM STATION	TO STATION	LINE	DETAIL	(EA)
8	EB	31+10	33+50	"S33"	38	11
8	EB	33+50	34+00	"S33"	38B	7
8	EB	32+65	33+50	"S33"	38	5
8	EB	32+80	42+70	"S33"	25A	43
8	EB	42+70	46+69	"S33"	25	10
8	EB	34+00	46+69	"S33"	11/13	134
8	EB	75+69	102+43	"5VE1"	11/13	280
8	EB	75+69	102+26	"5VE1"	25	57
8	EB	102+00	102+76	"5VE1"	36B	5
8	EB	102+00	103+00	"5VE1"	8/10	17
8	EB	102+76	106+50	"5VE1"	36B	17
8	EB	102+43	105+22	"5VE1"	11/13	31
8	EB	102+26	105+04	"5VE1"	25 (Mod)	7
8	EB	103+00	105+28	"5VE1"	8/10	35
8	EB	105+04	151+50	"5VE1"	25	98
8	EB	105+22	161+94	"5VE1"	11/13	593
8	EB	106+50	150+25	"5VE1"	11/13	458
8	EB	151+50	161+94	"5VE1"	25 (Mod)	23
8	EB	113+00	117+00	"5VE1"	36A	18
8	EB	117+00	119+10	"5VE1"	8/10	33
8	EB	119+10	129+10	"5VE1"	11/13	106
8	EB	129+10	145+25	"5VE1"	37	110
8	EB	145+25	150+00	"5VE1"	38	21
8	EB	148+40	150+88	"5VE1"	36	12
8	EB	148+40	151+40	"5VE1"	36	14
8	EB	161+94	168+68	"5VE1"	25A (Mod)	30
8	EB	168+68	171+60	"5VE1"	36B	14
8	EB	171+60	172+40	"5VE1"	38B	9
8	EB	161+94	165+40	"5VE1"	11/13	38
8	EB	137+08	143+36	"2E1"	25 (Mod)	15
8	EB	137+08	143+36	"2E1"	11/13	68
8	EB	139+85	142+56	"2E1"	36B	13
8	EB	143+36	144+37	"2E1"	25	4
8	EB	143+36	144+37	"2E1"	11/13	13
8	EB	143+36	143+56	"2E1"	38B	4
8	EB	143+56	144+37	"2E1"	11/13	10
8	EB	149+38	152+36	"11SD8"	36B	14
8	EB	144+37	152+37	"11SD8"	11/13	85
8	EB	144+37	152+39	"11SD8"	11/13	85
8	EB	144+37	152+41	"11SD8"	25	18
					TOTAL 1	2,563

ROUTE	Dir	FROM STATION	TO STATION	LINE	DETAIL	(EA)
8	EB	143+27	144+37	"2E1"	25 (Mod)	4
8	EB	143+27	144+37	"2E1"	11/13	14
8	EB	143+81	144+37	"2E1"	38	4
8	EB	144+37	149+38	"11SD8"	25 (Mod)	12
8	EB	144+37	152+33	"11SD8"	11/13	85
8	EB	144+37	148+60	"11SD8"	38	19
8	EB	152+36	152+74	"11SD8"	36B	3
8	EB	152+37	153+77	"11SD8"	11/13	16
8	EB	152+39	153+80	"11SD8"	11/13	16
8	EB	152+41	153+82	"11SD8"	25	4
8	EB	152+74	153+76	"11SD8"	11/13	13
8	EB	153+82	169+47	"11SD8"	25	34
8	EB	153+77	169+47	"11SD8"	11/13	165
8	EB	153+80	169+47	"11SD8"	11/13	165
8	EB	153+76	169+47	"11SD8"	11/13	165
8	EB	153+76	169+47	"11SD8"	11/13	165
8	EB	158+86	161+23	"11SD8"	36B	21
8	EB	161+23	168+23	"11SD8"	37	49
8	EB	168+23	169+47	"11SD8"	38	7
8	WB	166+66	163+92	"11SD8"	36	25
8	WB	169+47	157+30	"11SD8"	11/13	129
8	WB	157+30	154+07	"11SD8"	38B	29
8	WB	169+47	166+76	"11SD8"	11/13	30
8	WB	166+76	156+55	"11SD8"	37	71
8	WB	156+55	155+28	"11SD8"	38B	13
8	WB	155+28	154+04	"11SD8"	36	13
8	WB	169+47	157+00	"11SD8"	11/13	131
8	WB	157+00	154+00	"11SD8"	37	22
8	WB	169+47	153+98	"11SD8"	11/13	164
8	WB	169+47	153+97	"11SD8"	25	34
8	WB	154+07	152+48	"11SD8"	38B	16
8	WB	154+04	152+41	"11SD8"	36	15
8	WB	154+00	153+00	"11SD8"	37	9
8	WB	153+00	152+40	"11SD8"	38B	7
8	WB	153+98	152+38	"11SD8"	11/13	19
8	WB	153+97	152+36	"11SD8"	25 (Mod)	5
8	WB	152+41	151+30	"11SD8"	36	11
8	WB	150+35	144+37	"11SD8"	11/13	64
8	WB	144+30	143+36	"W"	11/13	11
8	WB	152+40	150+00	"11SD8"	38B	22
					TOTAL 2	1,801

ROUTE	Dir	FROM STATION	TO STATION	LINE	DETAIL	(EA)
8	WB	150+00	144+37	"11SD8"	36	49
8	WB	144+30	143+36	"W"	36	9
8	WB	152+38	144+37	"11SD8"	11/13	85
8	WB	144+30	143+38	"W"	11/13	11
8	WB	153+97	144+37	"11SD8"	25 (Mod)	21
8	WB	144+30	143+40	"W"	25 (Mod)	3
8	WB	143+36	141+74	"W"	11/13	19
8	WB	143+36	141+74	"W"	36	15
8	WB	143+38	132+73	"W"	11/13	113
8	WB	143+40	132+77	"W"	25 (Mod)	24
8	WB	132+73	121+82	"W"	11/13	115
8	WB	132+77	126+47	"W"	25 (Mod)	15
8	WB	126+47	121+82	"W"	36B	21
8	WB	126+47	121+82	"W"	25A	21
8	WB	126+47	121+82	"W"	11/13	50
8	WB	121+82	121+64	"5VW1"	36B	2
8	WB	121+82	121+64	"5VW1"	25A	2
8	WB	121+64	75+25	"5VW1"	25	98
8	WB	121+82	75+09	"5VW1"	11/13	489
8	WB	121+64	85+70	"5VW1"	11/13	376
8	WB	121+82	116+05	"5VW1"	11/13	63
8	WB	100+00	89+10	"5VW1"	11/13	115
8	WB	116+05	92+87	"5VW1"	37	157
8	WB	92+87	88+86	"5VW1"	38B	70
8	WB	88+86	84+66	"5VW1"	36	37
8	WB	75+25	72+51	"5VW1"	25 (Mod)	7
8	WB	75+09	72+34	"5VW1"	11/13	30
8	WB	72+51	46+71	"5VW1"	25	55
8	WB	72+34	46+71	"5VW1"	11/13	269
8	WB	46+71	36+87	"S32"	25	22
8	WB	46+71	37+85	"S32"	11/13	94
8	WB	37+85	36+87	"S32"	11/13	13
8	WB	36+96	37+30	"S32"	36	5
8	EB	63+43	64+33	"M5"	38B	10
8	EB	64+43	73+03	"M5"	8/10	127
8	EB	64+07	64+42	"M5"	38	3
8	EB	64+52	64+88	"M5"	38	3
8	EB	64+88	73+03	"M5"	25A	35
8	EB	77+61	78+03	"M1AAB1"	38	3
8	EB	78+16	80+00	"M1AAB1"	8/10	28
					TOTAL 3	2,683

ROUTE	Dir	FROM STATION	TO STATION	LINE	DETAIL	(EA)
8	EB	78+22	78+79	"M1AAB1"	25A	4
8	EB	78+79	80+00	"M1AAB1"	38	7
8	EB	77+72	77+90	"M1AB1`"	38	2
8	EB	78+00	84+00	"M1AB1`"	25A	26
8	EB	83+00	83+48	"M1AB1`"	38	3
8	EB	80+00	85+90	"M1AB1`"	8/10	88
8	EB	121+00	127+15	"SD8S1`"	11/13	66
8	EB	121+88	137+55	"SD8S1`"	25A (Mod)	67
8	EB	134+40	137+55	"SD8S1`"	11/13	35
8	WB	52+80	59+74	"S2"	25A	30
8	WB	50+80	52+80	"S2"	11/13	23
8	EB	134+91	142+83	"N3"	25A (Mod)	34
8	EB	142+83	145+20	"N3"	36A	11
8	EB	145+20	146+86	"N3"	8/10	26
8	WB	153+23	135+63	"5VS3"	11/13	185
8	WB	153+23	135+70	"5VS3"	25A (Mod)	75
8	WB	150+05	145+38	"5VS3"	36	41
8	WB	135+63	132+95	"5VS3"	11/13	30
8	WB	135+70	133+00	"5VS3"	25A (Mod)	13
8	WB	132+95	126+44	"5VS3"	11/13	70
8	WB	133+00	126+44	"5VS3"	25A	29
8	EB	131+80	133+32	"S4_A"	25A	8
8	EB	133+32	140+08	"S4_A"	25A (Mod)	30
8	EB	140+08	148+98	"S4_A"	25A (Mod)	39
8	EB	147+00	147+84	"S4_A"	36B	5
8	EB	147+84	148+96	"S4_A"	37	10
8	EB	148+98	150+36	"S4_A"	25A (Mod)	7
8	EB	148+96	150+34	"S4_A"	37	12
8	EB	150+36	155+60	"S4_A"	25A (Mod)	23
8	EB	150+34	151+23	"S4_A"	37	8
8	EB	151+23	152+15	"S4_A"	36	9
8	EB	144+27	144+58	"M3"	36	3
8	EB	144+67	150+33	"M3"	25A (Mod)	25
8	EB	155+48	161+12	"M6"	25A	25
8	WB	163+77	154+95	"M1"	25A (Mod)	38
					TOTAL 4	1,107
					TOTAL 3	2,683
					TOTAL 2	1,801
					TOTAL 1	2,563
					GRAND TOTAL	8,154

(N) - NOT A SEPARATE PAY ITEM. FOR INFORMATION ONLY.

PAVEMENT DELINEATION QUANTITIES

PDQ-8

REVISED BY | DATE REVISED
ROBERT EDEJER | SHAHIN ADIBI
CALCULATED-DESIGNED BY | CHECKED BY
FUNCTIONAL SUPERVISOR
CAMILLE ABOU FADEL

STATE OF CALIFORNIA - DEPARTMENT OF TRANSPORTATION
Caltrans®
TRAFFIC DESIGN

LAST REVISION 06-21-16 | DATE PLOTTED => 04-OCT-2016 | TIME PLOTTED => 11:30

Dist	COUNTY	ROUTE	POST MILES TOTAL PROJECT	SHEET No.	TOTAL SHEETS
11	SD	8	T0.5/R0.7	69	162

REGISTERED CIVIL ENGINEER 06-15-16 DATE

08-22-16
PLANS APPROVAL DATE

REGISTERED PROFESSIONAL ENGINEER
SHAHIN T. ADIBI
No. 54839
Exp. 6-30-18
CIVIL
STATE OF CALIFORNIA

THE STATE OF CALIFORNIA OR ITS OFFICERS OR AGENTS SHALL NOT BE RESPONSIBLE FOR THE ACCURACY OR COMPLETENESS OF SCANNED COPIES OF THIS PLAN SHEET.

REMOVE THERMOPLASTIC TRAFFIC STRIPE

ROUTE	Dir	FROM STATION	TO STATION	LINE	DETAIL	(LF)	REMARKS
8	EB	102+76	106+50	"5VE1"	36B	1,496	MIDWAY Dr UC
8	EB	102+43	105+22	"5VE1"	11/13	70	MIDWAY Dr UC
8	EB	102+26	105+04	"5VE1"	25 (Mod)	278	MIDWAY Dr UC
8	EB	103+16	105+70	"5VE1"	27B (Mod)	254	MIDWAY Dr UC
8	EB	103+00	105+28	"5VE1"	8/10	67	MIDWAY Dr UC
8	EB	161+94	172+40	"5VE1"	27B (Mod)	1,046	BRIDGE
8	EB	161+94	168+68	"5VE1"	25A (Mod)	674	BRIDGE
8	EB	168+68	171+60	"5VE1"	36B	584	BRIDGE
8	EB	171+60	172+40	"5VE1"	38B	160	BRIDGE
8	EB	161+94	165+40	"5VE1"	11/13	87	BRIDGE
8	EB	137+08	143+36	"2E1"	25 (Mod)	628	SB Rte 5 Conn (BRIDGE)
8	EB	137+08	143+36	"2E1"	11/13	157	SB Rte 5 Conn (BRIDGE)
8	EB	137+08	139+85	"2E1"	27B	277	SB Rte 5 Conn (BRIDGE)
8	EB	139+85	142+56	"2E1"	36B	542	SB Rte 5 Conn (BRIDGE)
8	EB	152+36	152+74	"11SD8"	36B	152	MORENA Blvd UC
8	EB	152+37	153+77	"11SD8"	11/13	35	MORENA Blvd UC
8	EB	152+39	153+80	"11SD8"	11/13	36	MORENA Blvd UC
8	EB	152+41	153+82	"11SD8"	25 (Mod)	141	MORENA Blvd UC
8	EB	152+74	153+76	"11SD8"	11/13	26	MORENA Blvd UC
8	EB	152+31	153+71	"11SD8"	27B	140	MORENA Blvd UC
8	WB	154+10	152+50	"11SD8"	27B (Mod)	160	MORENA Blvd UC
8	WB	154+07	152+48	"11SD8"	38B	318	MORENA Blvd UC
8	WB	154+04	152+41	"11SD8"	36	652	MORENA Blvd UC
8	WB	154+00	153+00	"11SD8"	37	40	MORENA Blvd UC
8	WB	153+00	152+40	"11SD8"	38B	120	MORENA Blvd UC
8	WB	153+98	152+38	"11SD8"	11/13	40	MORENA Blvd UC
8	WB	153+97	152+36	"11SD8"	25 (Mod)	161	MORENA Blvd UC
8	WB	143+35	141+74	"W"	27B (Mod)	161	NB Rte 5 Conn (BRIDGE)
8	WB	143+36	141+74	"W"	11/13	41	NB Rte 5 Conn (BRIDGE)
8	WB	143+36	141+74	"W"	36	648	NB Rte 5 Conn (BRIDGE)
8	WB	143+38	132+73	"W"	11/13	267	BRIDGE
8	WB	143+40	132+77	"W"	25 (Mod)	1,063	BRIDGE
8	WB	141+74	141+70	"W"	27B (Mod)	4	BRIDGE
8	WB	74+96	72+15	"5VW1"	27B (Mod)	281	W MISSION BAY Dr UC
8	WB	75+25	72+51	"5VW1"	25 (Mod)	274	W MISSION BAY Dr UC
8	WB	75+09	72+34	"5VW1"	11/13	69	W MISSION BAY Dr UC
8	EB	135+76	132+90	"5VS3"	27B (Mod)	286	NB Rte 5 Conn OC (BRIDGE-FREEWAY 5)
8	EB	135+63	132+95	"5VS3"	11/13	67	NB Rte 5 Conn OC (BRIDGE-FREEWAY 5)
8	EB	135+70	133+00	"5VS3"	25A (Mod)	270	NB Rte 5 Conn OC (BRIDGE-FREEWAY 5)
8	EB	133+32	140+08	"S4_A"	27B (Mod)	676	NB Rte 5 Conn OC (BRIDGE-RAILROAD)
8	EB	133+32	140+08	"S4_A"	25A (Mod)	676	NB Rte 5 Conn OC (BRIDGE-RAILROAD)
8	EB	148+98	150+36	"S4_A"	25A (Mod)	138	NB Rte 5 Conn OC (BRIDGE-MORENA Blvd)
8	EB	148+96	150+34	"S4_A"	37	56	NB Rte 5 Conn OC (BRIDGE-MORENA Blvd)
8	EB	148+93	150+31	"S4_A"	27B (Mod)	138	NB Rte 5 Conn OC (BRIDGE-MORENA Blvd)
					TOTAL	13,456*	

REMOVE PAINTED TRAFFIC STRIPE

ROUTE	Dir	FROM STATION	TO STATION	LINE	DETAIL	(LF)	REMARKS
8	EB	102+26	105+04	"5VE1"	25 (Mod)	209	MIDWAY Dr UC
8	EB	103+16	105+70	"5VE1"	27B (Mod)	191	MIDWAY Dr UC
8	EB	161+94	172+40	"5VE1"	27B (Mod)	785	BRIDGE
8	EB	161+94	168+68	"5VE1"	25A (Mod)	506	BRIDGE
8	EB	137+08	143+36	"2E1"	25 (Mod)	471	SB Rte 5 Conn (BRIDGE)
8	EB	152+41	153+82	"11SD8"	25 (Mod)	106	MORENA Blvd UC
8	WB	154+10	152+50	"11SD8"	27B (Mod)	120	MORENA Blvd UC
8	WB	153+97	152+36	"11SD8"	25 (Mod)	121	MORENA Blvd UC
8	WB	143+35	141+74	"W"	27B (Mod)	121	NB Rte 5 Conn (BRIDGE)
8	WB	143+40	132+77	"W"	25 (Mod)	798	BRIDGE
8	WB	141+74	141+70	"W"	27B (Mod)	3	BRIDGE
8	WB	74+96	72+15	"5VW1"	27B (Mod)	211	W MISSION BAY Dr UC
8	WB	75+25	72+51	"5VW1"	25 (Mod)	206	W MISSION BAY Dr UC
8	EB	135+76	132+90	"5VS3"	27B (Mod)	215	NB Rte 5 Conn OC (BRIDGE-FREEWAY 5)
8	EB	135+70	133+00	"5VS3"	25A (Mod)	203	NB Rte 5 Conn OC (BRIDGE-FREEWAY 5)
8	EB	133+32	140+08	"S4_A"	27B (Mod)	507	NB Rte 5 Conn OC (BRIDGE-RAILROAD)
8	EB	133+32	140+08	"S4_A"	25A (Mod)	507	NB Rte 5 Conn OC (BRIDGE-RAILROAD)
8	EB	148+98	150+36	"S4_A"	25A (Mod)	104	NB Rte 5 Conn OC (BRIDGE-MORENA Blvd)
8	EB	148+93	150+31	"S4_A"	27B (Mod)	104	NB Rte 5 Conn OC (BRIDGE-MORENA Blvd)
					TOTAL	5,488*	

* - SEE "THQ" SHEETS FOR ADDITIONAL QUANTITIES.

PAVEMENT DELINEATION QUANTITIES

PDQ-9

STATE OF CALIFORNIA - DEPARTMENT OF TRANSPORTATION
Caltrans® TRAFFIC DESIGN

FUNCTIONAL SUPERVISOR: CAMILLE ABOU FADEL
CALCULATED-DESIGNED BY: ROBERT EDEJER
CHECKED BY: SHAHIN ADIBI
REVISED BY
DATE REVISED

LAST REVISION 06-21-16
DATE PLOTTED => 04-OCT-2016
TIME PLOTTED => 11:30

Dist	COUNTY	ROUTE	POST MILES TOTAL PROJECT	SHEET No.	TOTAL SHEETS
11	SD	8	T0.5/R0.7	70	162

REGISTERED CIVIL ENGINEER 06-15-16 DATE

08-22-16
PLANS APPROVAL DATE

REGISTERED PROFESSIONAL ENGINEER SHAHIN T. ADIBI No. 54839 Exp. 6-30-18 CIVIL STATE OF CALIFORNIA

THE STATE OF CALIFORNIA OR ITS OFFICERS OR AGENTS SHALL NOT BE RESPONSIBLE FOR THE ACCURACY OR COMPLETENESS OF SCANNED COPIES OF THIS PLAN SHEET.

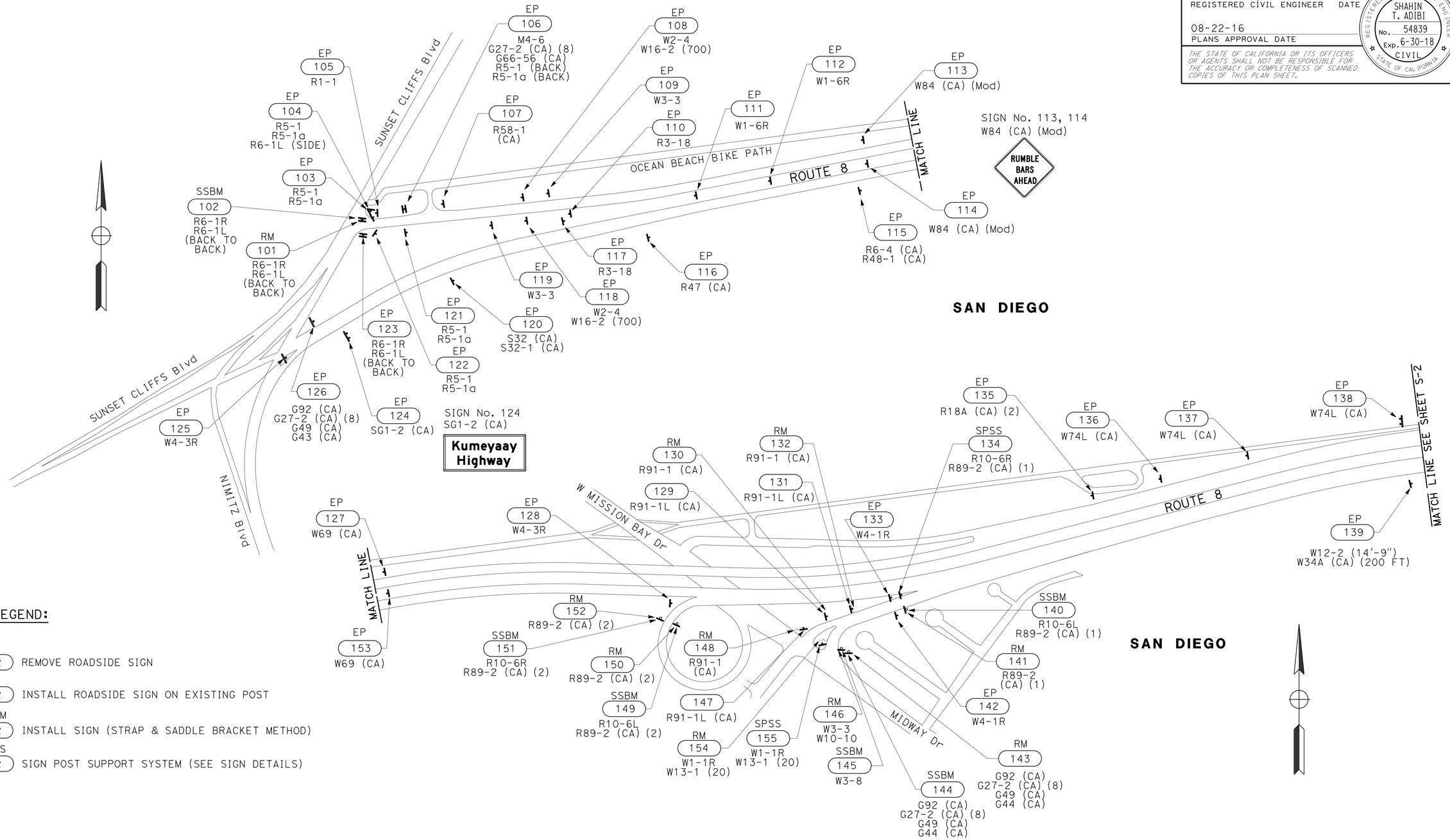

LEGEND:

- RM 162 — REMOVE ROADSIDE SIGN
- EP 162 — INSTALL ROADSIDE SIGN ON EXISTING POST
- SSBM 162 — INSTALL SIGN (STRAP & SADDLE BRACKET METHOD)
- SPSS 162 — SIGN POST SUPPORT SYSTEM (SEE SIGN DETAILS)

APPROVED FOR PAVEMENT DELINEATION AND SIGN WORK ONLY

SIGN PLAN

NO SCALE

S-1

STATE OF CALIFORNIA - DEPARTMENT OF TRANSPORTATION
Caltrans
TRAFFIC DESIGN

FUNCTIONAL SUPERVISOR: CAMILLE ABOU FADEL
CALCULATED-DESIGNED BY: SHAHIN ADIBI
CHECKED BY: ROBERT EDEJER
REVISED BY
DATE REVISED

LAST REVISION 06-21-16
DATE PLOTTED => 04-OCT-2016
TIME PLOTTED => 11:30

Dist	COUNTY	ROUTE	POST MILES TOTAL PROJECT	SHEET No.	TOTAL SHEETS
11	SD	8	T0.5/R0.7	71	162

REGISTERED CIVIL ENGINEER 06-15-16 DATE

08-22-16
PLANS APPROVAL DATE

REGISTERED PROFESSIONAL ENGINEER SHAHIN T. ADIBI No. 54839 Exp. 6-30-18 CIVIL STATE OF CALIFORNIA

THE STATE OF CALIFORNIA OR ITS OFFICERS OR AGENTS SHALL NOT BE RESPONSIBLE FOR THE ACCURACY OR COMPLETENESS OF SCANNED COPIES OF THIS PLAN SHEET.

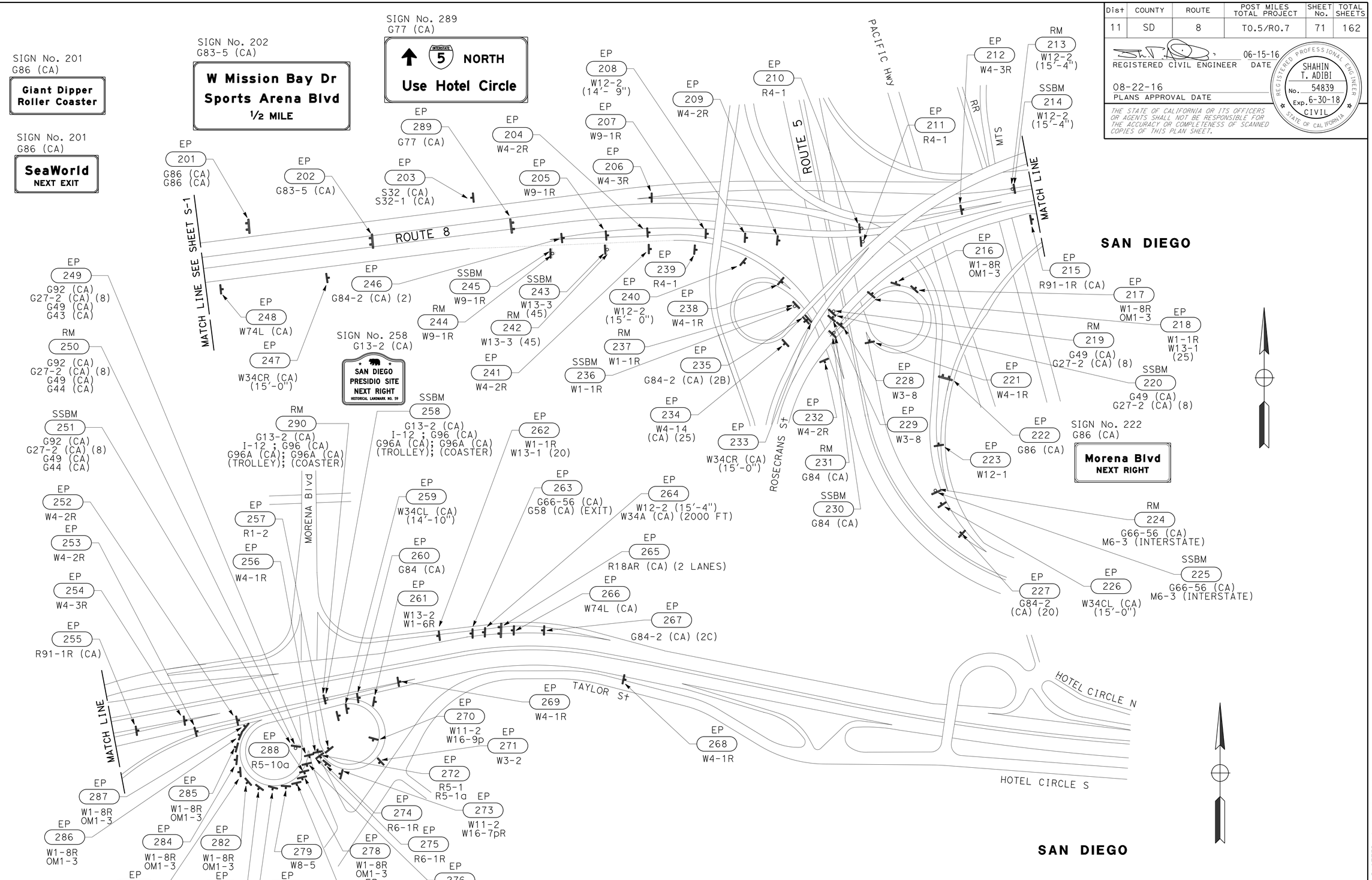

APPROVED FOR SIGN WORK ONLY

SIGN PLAN

NO SCALE

S-2

STATE OF CALIFORNIA - DEPARTMENT OF TRANSPORTATION
Caltrans® TRAFFIC DESIGN

FUNCTIONAL SUPERVISOR: CAMILLE ABOU FADEL
CALCULATED-DESIGNED BY: SHAHIN ADIBI
CHECKED BY: ROBERT EDEJER
REVISED BY / DATE REVISED

LAST REVISION: DATE PLOTTED => 04-OCT-2016 TIME PLOTTED => 11:30
06-21-16

Dist	COUNTY	ROUTE	POST MILES TOTAL PROJECT	SHEET No.	TOTAL SHEETS
11	SD	8	T0.5/R0.7	72	162

REGISTERED CIVIL ENGINEER 06-15-16 DATE

08-22-16
PLANS APPROVAL DATE

REGISTERED PROFESSIONAL ENGINEER SHAHIN T. ADIBI No. 54839 Exp. 6-30-18 CIVIL STATE OF CALIFORNIA

THE STATE OF CALIFORNIA OR ITS OFFICERS OR AGENTS SHALL NOT BE RESPONSIBLE FOR THE ACCURACY OR COMPLETENESS OF SCANNED COPIES OF THIS PLAN SHEET.

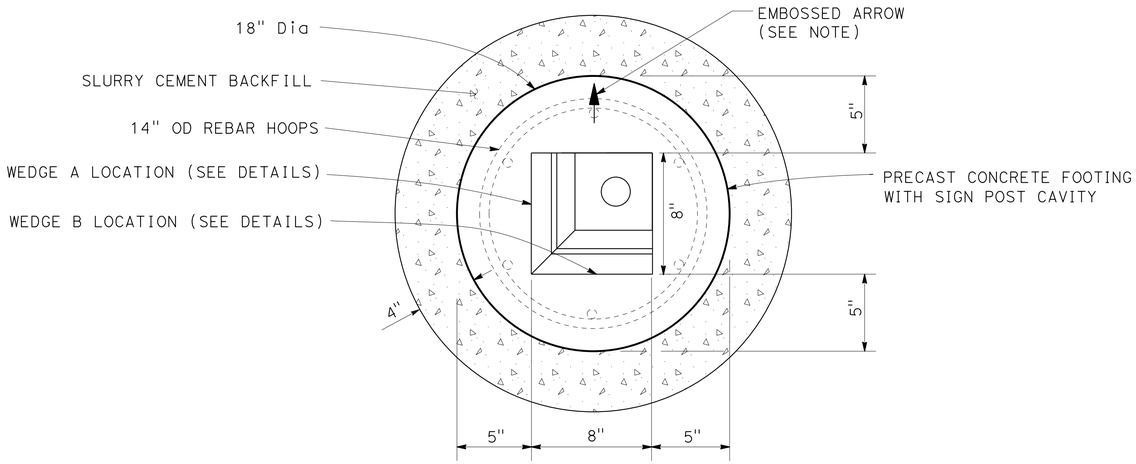

TOP VIEW

NOTES:

1. EMBOSSED ARROW IS TO POINT IN THE DIRECTION OF TRAFFIC FLOW.
2. CAVITY DIMENSIONS TO HAVE A 1/8" TOLERANCE.

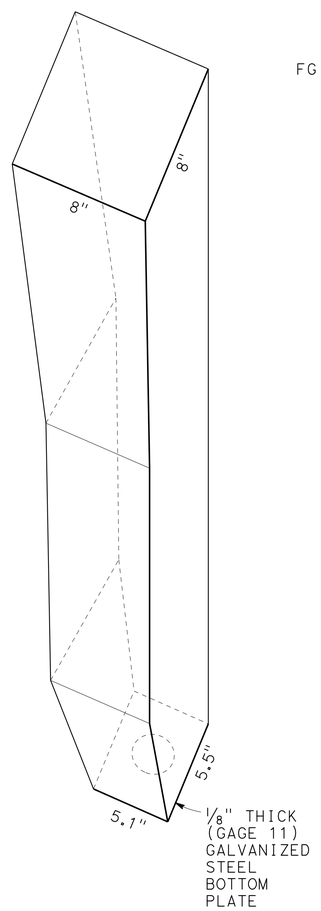

SIGN POST CAVITY

FRONT VIEW (ROTATED 22.5° Rt)

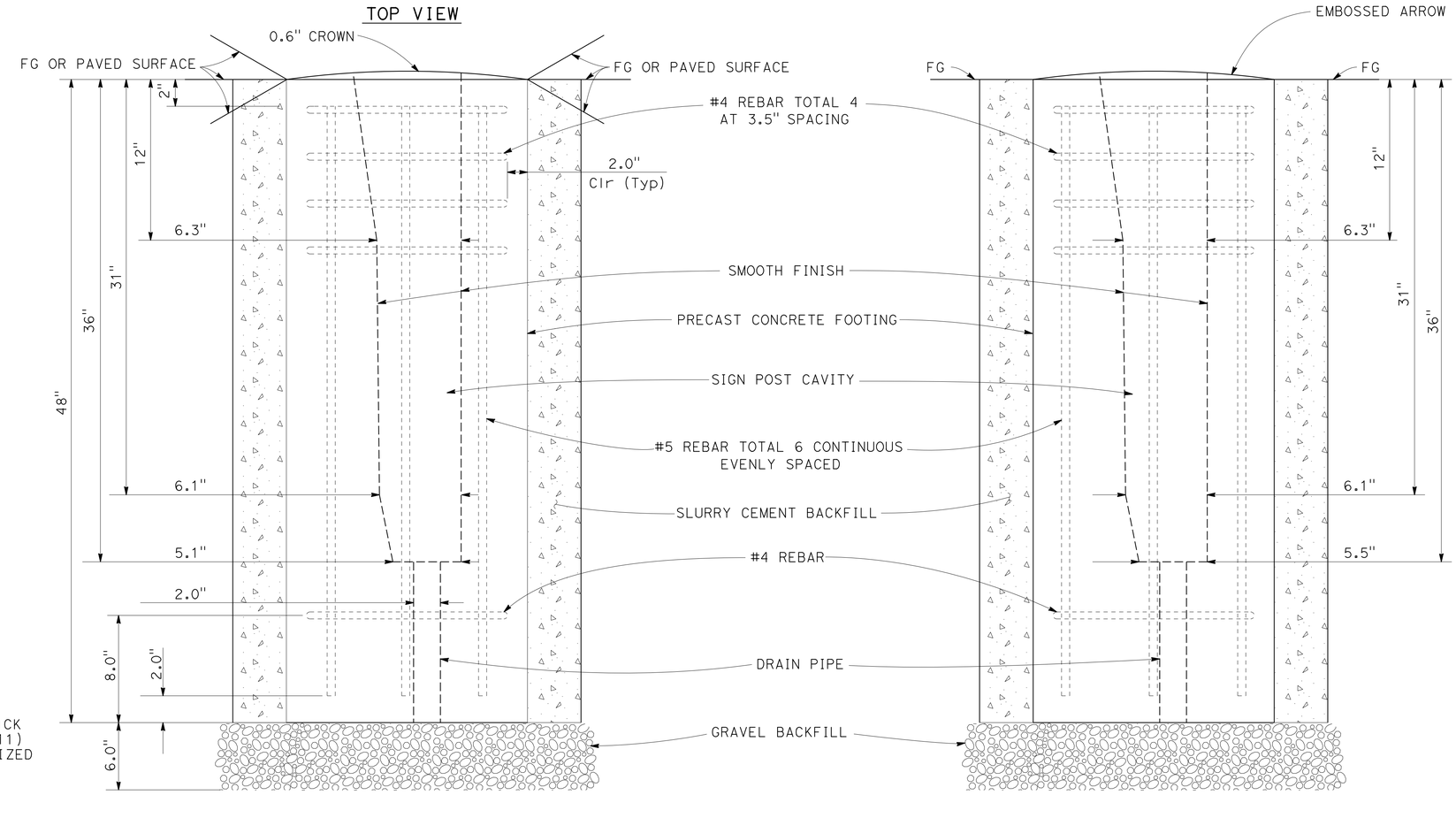

FRONT VIEW

SIDE VIEW

SIGN POST (6" X 6") SUPPORT SYSTEM

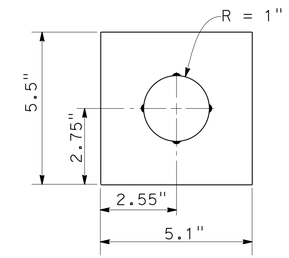

TOP VIEW

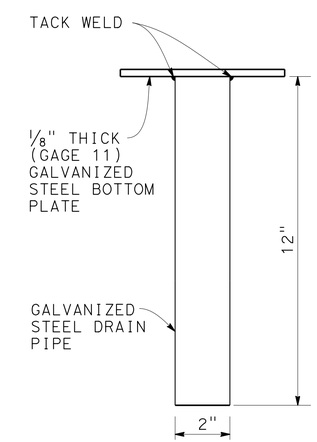

SIDE VIEW

WELDED BOTTOM PLATE AND DRAIN PIPE

SIGN DETAILS

NO SCALE

SD-1

STATE OF CALIFORNIA - DEPARTMENT OF TRANSPORTATION
Caltrans®
TRAFFIC DESIGN

FUNCTIONAL SUPERVISOR: CAMILLE ABOUFADEL
CALCULATED-DESIGNED BY: ROBERT EDEJER
CHECKED BY: SHAHIN ADIBI
REVISED BY
DATE REVISED

LAST REVISION 06-21-16
DATE PLOTTED => 04-OCT-2016
TIME PLOTTED => 11:30

Dist	COUNTY	ROUTE	POST MILES TOTAL PROJECT	SHEET No.	TOTAL SHEETS
11	SD	8	T0.5/R0.7	73	162

REGISTERED CIVIL ENGINEER 06-15-16 DATE

08-22-16
PLANS APPROVAL DATE

REGISTERED PROFESSIONAL ENGINEER SHAHIN T. ADIBI No. 54839 Exp. 6-30-18 CIVIL STATE OF CALIFORNIA

THE STATE OF CALIFORNIA OR ITS OFFICERS OR AGENTS SHALL NOT BE RESPONSIBLE FOR THE ACCURACY OR COMPLETENESS OF SCANNED COPIES OF THIS PLAN SHEET.

NOTE:

1. WEDGE DIMENSIONS TO HAVE A 1/8" TOLERANCE.

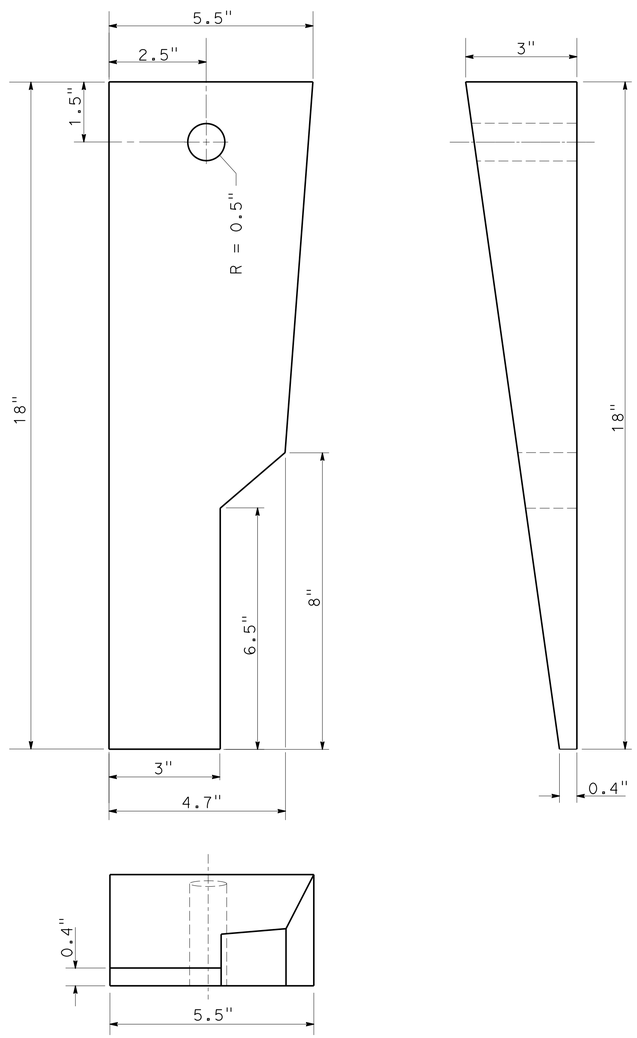

WEDGE A

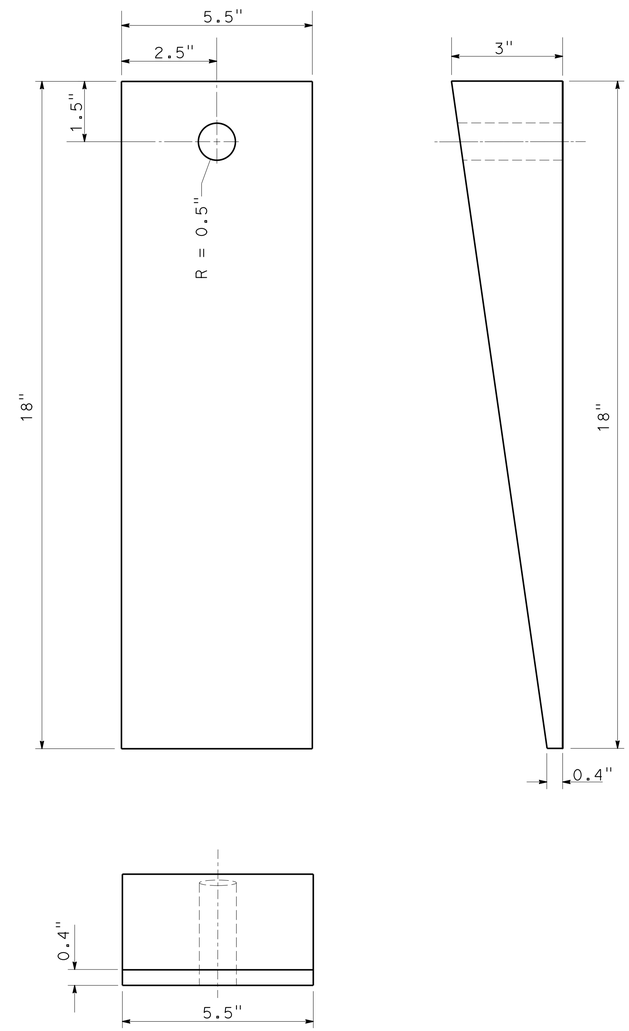

WEDGE B

SIGN POST WEDGE DETAILS

SIGN DETAILS

NO SCALE

SD-2

STATE OF CALIFORNIA - DEPARTMENT OF TRANSPORTATION
Caltrans
TRAFFIC DESIGN

FUNCTIONAL SUPERVISOR: CAMILLE ABOUFADEL
CALCULATED-DESIGNED BY: ROBERT EDEJER
CHECKED BY: SHAHIN ADIBI
REVISED BY
DATE REVISED

LAST REVISION 06-21-16
DATE PLOTTED => 04-OCT-2016
TIME PLOTTED => 11:30

Dist	COUNTY	ROUTE	POST MILES TOTAL PROJECT	SHEET No.	TOTAL SHEETS
11	SD	8	T0.5/R0.7	74	162

REGISTERED CIVIL ENGINEER 06-15-16 DATE

08-22-16
PLANS APPROVAL DATE

REGISTERED PROFESSIONAL ENGINEER SHAHIN T. ADIBI No. 54839 Exp. 6-30-18 CIVIL STATE OF CALIFORNIA

THE STATE OF CALIFORNIA OR ITS OFFICERS OR AGENTS SHALL NOT BE RESPONSIBLE FOR THE ACCURACY OR COMPLETENESS OF SCANNED COPIES OF THIS PLAN SHEET.

LEGEND:

U/L = UPPER / LOWER CASE
Caps = CAPITAL
Num = NUMBER
Deg = DEGREES

SIGN No. 201A
G86 (CA)
FWBT

LEGEND				ARROW	
LINE No.	U/L	Caps	Num	Deg	LENGTH
1	8E(M)/6E(M)				
2		6E			

SIGN No. 201B
G86 (CA)
FWBT

LEGEND				ARROW	
LINE No.	U/L	Caps	Num	Deg	LENGTH
1	6E(M)/4.5E(M)				
2	6E(M)/4.5E(M)				

SIGN No. 113, 114
W84 (CA) (Mod)
FWBT

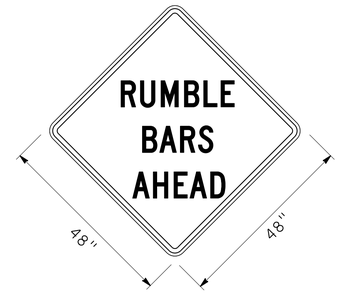

LEGEND				ARROW	
LINE No.	U/L	Caps	Num	Deg	LENGTH
1		7C			
2		7C			
3		7C			

SIGN No. 124
SG1-2 (CA)
FEBT

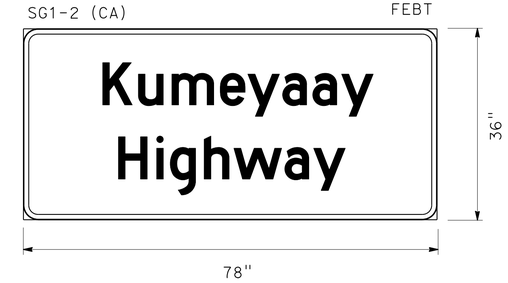

LEGEND				ARROW	
LINE No.	U/L	Caps	Num	Deg	LENGTH
1	8D/6D				
2	8D/6D				

SIGN No. 202
G83-5 (CA)
FWBT

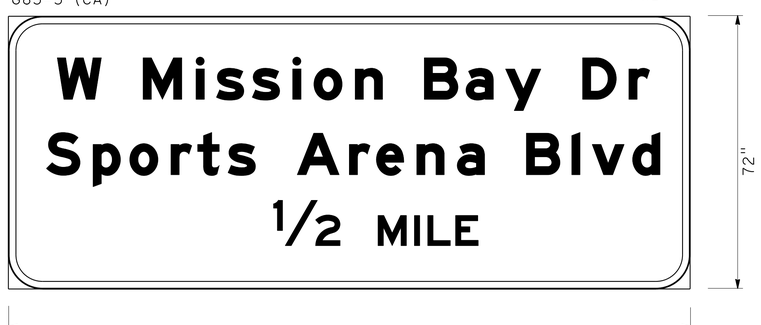

LEGEND				ARROW	
LINE No.	U/L	Caps	Num	Deg	LENGTH
1	10.67E(M)/8E(M)				
2	10.67E(M)/8E(M)				
3		8E	12E		

SIGN No. 289
G77 (CA)
FEBT

LEGEND				ARROW	
LINE No.	U/L	Caps	Num	Deg	LENGTH
1		8E	10E	90	13
2	8E(M)/6E(M)				

SIGN No. 222
G86 (CA)
FEBT

LEGEND				ARROW	
LINE No.	U/L	Caps	Num	Deg	LENGTH
1	13.3E(M)/10E(M)				
2		8E			

SIGN No. 258
G13-2 (CA)
FEBT

LEGEND				ARROW	
LINE No.	U/L	Caps	Num	Deg	LENGTH
1		6D			
2		6D			
3		6D			
4		3C	3C		

SIGN DETAILS

CONTRACTOR FURNISHED SIGN PANEL

NO SCALE

SD-3

STATE OF CALIFORNIA - DEPARTMENT OF TRANSPORTATION
Caltrans® TRAFFIC DESIGN

FUNCTIONAL SUPERVISOR: CAMILLE ABOUFADEL
CALCULATED-DESIGNED BY: SHAHIN ADIBI
CHECKED BY:
REVISED BY: THANH NGUYEN
DATE REVISED:

LAST REVISION 06-21-16
DATE PLOTTED => 04-OCT-2016
TIME PLOTTED => 11:30

Dist	COUNTY	ROUTE	POST MILES TOTAL PROJECT	SHEET No.	TOTAL SHEETS
11	SD	8	T0.5/R0.7	75	162

REGISTERED CIVIL ENGINEER 06-15-16 DATE

08-22-16
PLANS APPROVAL DATE

REGISTERED PROFESSIONAL ENGINEER SHAHIN T. ADIBI No. 54839 Exp. 6-30-18 CIVIL STATE OF CALIFORNIA

THE STATE OF CALIFORNIA OR ITS OFFICERS OR AGENTS SHALL NOT BE RESPONSIBLE FOR THE ACCURACY OR COMPLETENESS OF SCANNED COPIES OF THIS PLAN SHEET.

NOTES:

1. FEDERAL (MUTCD) SIGN CODES ARE SHOWN UNLESS DESIGNATED BY (CA) INDICATING STANDARD CALIFORNIA SIGN SPECIFICATIONS.
2. MINIMUM POST LENGTHS WERE CALCULATED ASSUMING A LEVEL GROUND SURFACE FROM THE EP. ENSURE "C" DIMENSION IS MET. POST LENGTHS MAY VARY DUE TO SITE CONDITIONS.
3. EXACT LOCATIONS OF SIGNS AND POSTS SHALL BE DETERMINED BY THE ENGINEER.
4. REFER TO "FURNISH ROADSIDE SIGN PANEL" CHART FOR FURTHER INFORMATION.
5. REMOVE AND DISPOSE OF EXISTING SIGN PANEL AS SHOWN.

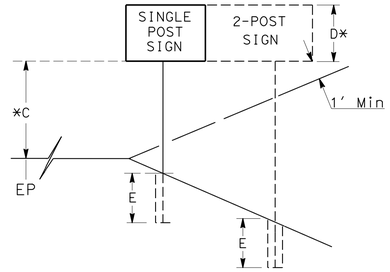

*TO BOTTOM OF LOWER PANEL ON MULTIPLE SIGN INSTALLATIONS.

ROADSIDE SIGN QUANTITIES

SIGN No.	SHEET No.	CODE	PANEL SIZE (N) HORIZ	PANEL SIZE (N) VERT	D	C	E	Min POST LENGTH	POST SIZE (N) 6 x 6	ROADSIDE SIGN ONE-POST	SIGN POST SUPPORT SYSTEM	INSTALL ROADSIDE SIGN PANEL ON EXISTING POST	INSTALL SIGN (STRAP AND SADDLE BRACKET METHOD)	REMOVE ROADSIDE SIGN	TREATED WOOD WASTE	REMARKS
			INCHES	INCHES	F†	F†	F†	F†	INCHES x INCHES	EA	EA	EA	EA	EA	LB	
101	S-1	R6-1R												1		PANELS ONLY
		R6-1L														
102	S-1	R6-1R	36	12									2			
		R61-L	36	12												
103	S-1	R5-1	36	36								2				
		R5-1a	36	24												
104	S-1	R5-1	36	36								3				
		R5-1a	36	24												
		R6-1L	36	12												
105	S-1	R1-1	30	30								1				
106	S-1	M4-6	24	12								5				
		G27-2 (CA) (8)	24	24												
		G66-56 (CA)	24	24												
		R5-1	36	36												
		R5-1a	36	24												
107	S-1	R58-1 (CA)	48	26								1				
108	S-1	W2-4	48	48								2				
		W16-2 (700)	24	18												
109	S-1	W3-3	48	48								1				
110	S-1	R3-18	30	30								1				
111	S-1	W1-6R	48	24								1				
112	S-1	W1-6R	48	24								1				
113	S-1	W84 (CA) (Mod)	48	48								1				
114	S-1	W84 (CA) (Mod)	48	48								1				
115	S-1	R6-4 (CA)	48	60								2				
		R48-1 (CA)	36	18												
116	S-1	R47 (CA)	54	36								1				
117	S-1	R3-18	30	30								1				
118	S-1	W2-4	48	48								2				
		W16-2 (700)	24	18												
119	S-1	W3-3	48	48								1				
120	S-1	S32 (CA)	54	42								2				
		S32-1 (CA)	15	18												
121	S-1	R5-1	36	36								2				
		R5-1a	36	24												
									SUBTOTAL 1			31	2	1		

(N) - NOT A SEPARATE PAY ITEM. FOR INFORMATION ONLY.

SIGN QUANTITIES

SQ-1

STATE OF CALIFORNIA - DEPARTMENT OF TRANSPORTATION
Caltrans
TRAFFIC DESIGN

FUNCTIONAL SUPERVISOR: CAMILLE ABOUFADEL
CALCULATED-DESIGNED BY: ROBERT EDEJER
CHECKED BY: SHAHIN ADIBI
REVISED BY
DATE REVISED

LAST REVISION 06-21-16
DATE PLOTTED => 04-OCT-2016
TIME PLOTTED => 11:30

Dist	COUNTY	ROUTE	POST MILES TOTAL PROJECT	SHEET No.	TOTAL SHEETS
11	SD	8	T0.5/R0.7	76	162

REGISTERED CIVIL ENGINEER 06-15-16 DATE

08-22-16
PLANS APPROVAL DATE

REGISTERED PROFESSIONAL ENGINEER SHAHIN T. ADIBI No. 54839 Exp. 6-30-18 CIVIL STATE OF CALIFORNIA

THE STATE OF CALIFORNIA OR ITS OFFICERS OR AGENTS SHALL NOT BE RESPONSIBLE FOR THE ACCURACY OR COMPLETENESS OF SCANNED COPIES OF THIS PLAN SHEET.

ROADSIDE SIGN QUANTITIES

SIGN No.	SHEET No.	CODE	PANEL SIZE (N) HORIZ	PANEL SIZE (N) VERT	D	C	E	Min POST LENGTH	POST SIZE (N) 6 x 6	ROADSIDE SIGN ONE-POST	SIGN POST SUPPORT SYSTEM	INSTALL ROADSIDE SIGN PANEL ON EXISTING POST	INSTALL SIGN (STRAP AND SADDLE BRACKET METHOD)	REMOVE ROADSIDE SIGN	TREATED WOOD WASTE	REMARKS
			INCHES	INCHES	Ft	Ft	Ft	Ft	INCHES x INCHES	EA	EA	EA	EA	EA	LB	
122	S-1	R5-1	36	36								2				
		R5-1a	36	24												
123	S-1	R6-1R	36	12								2				
		R6-1L	36	12												
124	S-1	SG1-2 (CA)	78	36								1				
125	S-1	W4-3R	48	48								1				
126	S-1	G92 (CA)	48	30								4				
		G27-2 (CA) (8)	21	18												
		G49 (CA)	21	9												
		G43 (CA)	21	48												
127	S-1	W69 (CA)	60	60								1				
128	S-1	W4-3R	48	48								1				
129	S-1	R91-1L (CA)	48	66	5.5	7.0	5.0	17.5	x	1						
130	S-1	R91-1 (CA)												1	155	LENGTH = 18'; (ONE-POST)
131	S-1	R91-1L (CA)	48	66	5.5	7.0	5.0	17.5	x	1						
132	S-1	R91-1 (CA)												1	155	LENGTH = 18'; (ONE-POST)
133	S-1	W4-1R	48	48								1				
134	S-1	R10-6R	24	36	3.0	7.0	3.0	13.0	x	1	1					
		R89-2 (CA) (1)	24	10												
135	S-1	R18A (CA) (2)	66	48								1				
136	S-1	W74L (CA)	60	60								1				
137	S-1	W74L (CA)	60	60								1				
138	S-1	W74L (CA)	60	60								1				
139	S-1	W12-2 (14'-9")	48	48								2				
		W34A (CA) (200 FT)	48	36												
140	S-1	R10-6L	24	36									2			
		R89-2 (CA) (1)	24	10												
141	S-1	R89-2 (CA) (1)												1		PANEL ONLY
142	S-1	W4-1R	48	48								1				
143	S-1	G92 (CA)												1		PANELS ONLY
		G27-2 (CA) (8)														
		G49 (CA)														
		G44 (CA)														
144	S-1	G92 (CA)	48	30									4			
		G27-2 (CA) (8)	21	18												
		G49 (CA)	21	9												
		G44 (CA)	21	15												
145	S-1	W3-8	48	48									1			
146	S-1	W3-3												1		PANELS ONLY
		W10-10														
									SUBTOTAL 2	3	1	20	7	5	310	

(N) - NOT A SEPARATE PAY ITEM. FOR INFORMATION ONLY.

SIGN QUANTITIES

SQ-2

STATE OF CALIFORNIA - DEPARTMENT OF TRANSPORTATION
Caltrans
TRAFFIC DESIGN

FUNCTIONAL SUPERVISOR: CAMILLE ABOUFADEL
CALCULATED-DESIGNED BY: ROBERT EDEJER
CHECKED BY: SHAHIN ADIBI
REVISED BY
DATE REVISED

LAST REVISION 06-21-16
DATE PLOTTED => 04-OCT-2016
TIME PLOTTED => 11:30

Dist	COUNTY	ROUTE	POST MILES TOTAL PROJECT	SHEET No.	TOTAL SHEETS
11	SD	8	T0.5/R0.7	77	162

REGISTERED CIVIL ENGINEER 06-15-16 DATE

08-22-16
PLANS APPROVAL DATE

REGISTERED PROFESSIONAL ENGINEER SHAHIN T. ADIBI No. 54839 Exp. 6-30-18 CIVIL STATE OF CALIFORNIA

THE STATE OF CALIFORNIA OR ITS OFFICERS OR AGENTS SHALL NOT BE RESPONSIBLE FOR THE ACCURACY OR COMPLETENESS OF SCANNED COPIES OF THIS PLAN SHEET.

ROADSIDE SIGN QUANTITIES

SIGN No.	SHEET No.	CODE	PANEL SIZE (N) HORIZ	PANEL SIZE (N) VERT	D	C	E	Min POST LENGTH	POST SIZE (N) 6 x 6	ROADSIDE SIGN ONE-POST	SIGN POST SUPPORT SYSTEM	INSTALL ROADSIDE SIGN PANEL ON EXISTING POST	INSTALL SIGN (STRAP AND SADDLE BRACKET METHOD)	REMOVE ROADSIDE SIGN	TREATED WOOD WASTE	REMARKS
			INCHES	INCHES	Ft	Ft	Ft	Ft	INCHES x INCHES	EA	EA	EA	EA	EA	LB	
147	S-1	R91-1L (CA)	48	66	5.5	7.0	5.0	17.5	×	1						
148	S-1	R91-1 (CA)												1	310	LENGTH = 18'; (TWO-POST)
149	S-1	R10-6L	24	36									2			
		R89-2 (CA) (2)	24	10												
150	S-1	R89-2 (CA) (2)												1		PANEL ONLY
151	S-1	R10-6R	24	36									2			
		R89-2 (CA) (2)	24	10												
152	S-1	R89-2 (CA) (2)												1		PANEL ONLY
153	S-1	W69 (CA)	60	60								1				
154	S-1	W1-1R												1	155	LENGTH = 18'; (ONE-POST)
		W13-1 (20)														
155	S-1	W1-1R	48	48	5.5	7.0	3.0	15.5	×	1	1					
		W13-1 (20)	24	24												
201	S-2	G86 (CA)	78	26								2				
		G86 (CA)	84	24												
202	S-2	G83-5 (CA)	174	72								1				
203	S-2	S32 (CA)	54	42								2				
		S32-1 (CA)	15	18												
204	S-2	W4-2R	48	48								1				
205	S-2	W9-1R	48	48								1				
206	S-2	W4-3R	48	48								1				
207	S-2	W9-1R	48	48								1				
208	S-2	W12-2 (14'-9")	48	48								1				
209	S-2	W4-2R	48	48								1				
210	S-2	R4-1	36	48								1				
211	S-2	R4-1	36	48								1				
212	S-2	W4-3R	48	48								1				
213	S-2	W12-2 (15'-4")												1		PANEL ONLY
214	S-2	W12-2 (15'-4")	48	48									1			
215	S-2	R91-1R(CA)	48	66								1				
216	S-2	W1-8R	18	24								2				
		OM1-3	18	18												
217	S-2	W1-8R	18	24								2				
		OM1-3	18	18												
218	S-2	W1-1R	36	36								2				
		W13-1 (25)	24	24												
219	S-2	G49 (CA)												1		PANELS ONLY
		G27-2 (CA) (8)														
220	S-2	G49 (CA)	30	15									2			
		G27-2 (CA) (8)	36	36												
221	S-2	W4-1R	48	48								1				
									SUBTOTAL 3	2	1	23	7	6	465	

(N) - NOT A SEPARATE PAY ITEM. FOR INFORMATION ONLY.

SIGN QUANTITIES

SQ-3

STATE OF CALIFORNIA - DEPARTMENT OF TRANSPORTATION
Caltrans
TRAFFIC DESIGN

FUNCTIONAL SUPERVISOR: CAMILLE ABOUFADEL
CALCULATED-DESIGNED BY: ROBERT EDEJER
CHECKED BY: SHAHIN ADIBI
REVISED BY
DATE REVISED

LAST REVISION 06-21-16 | DATE PLOTTED => 04-OCT-2016 | TIME PLOTTED => 11:30

Dist	COUNTY	ROUTE	POST MILES TOTAL PROJECT	SHEET No.	TOTAL SHEETS
11	SD	8	T0.5/R0.7	78	162

REGISTERED CIVIL ENGINEER 06-15-16 DATE

08-22-16
PLANS APPROVAL DATE

REGISTERED PROFESSIONAL ENGINEER SHAHIN T. ADIBI No. 54839 Exp. 6-30-18 CIVIL STATE OF CALIFORNIA

THE STATE OF CALIFORNIA OR ITS OFFICERS OR AGENTS SHALL NOT BE RESPONSIBLE FOR THE ACCURACY OR COMPLETENESS OF SCANNED COPIES OF THIS PLAN SHEET.

ROADSIDE SIGN QUANTITIES

SIGN No.	SHEET No.	CODE	PANEL SIZE (N) HORIZ	PANEL SIZE (N) VERT	D	C	E	Min POST LENGTH	POST SIZE (N) 6 x 6	ROADSIDE SIGN ONE-POST	SIGN POST SUPPORT SYSTEM	INSTALL ROADSIDE SIGN PANEL ON EXISTING POST	INSTALL SIGN (STRAP AND SADDLE BRACKET METHOD)	REMOVE ROADSIDE SIGN	TREATED WOOD WASTE	REMARKS
			INCHES	INCHES	F†	F†	F†	F†	INCHES x INCHES	EA	EA	EA	EA	EA	LB	
222	S-2	G86 (CA)	168	54								1				
223	S-2	W12-1	48	48								1				
224	S-2	G66-56 (CA)												1		PANELS ONLY
		M6-3 (INTERSTATE)														
225	S-2	G66-56 (CA)	24	24									2			
		M6-3 (INTERSTATE)	21	15												
226	S-2	W34CL (CA) (15'-0")	36	54								1				
227	S-2	G84-2 (CA) (20)	54	48								1				
228	S-2	W3-8	48	48								1				
229	S-2	W3-8	48	48								1				
230	S-2	G84 (CA)	54	48									1			
231	S-2	G84 (CA)												1		PANEL ONLY
232	S-2	W4-2R	48	48								1				
233	S-2	W34CR (CA) (15'-0")	36	54								1				
234	S-2	W4-14 (CA) (25)	60	60								1				
235	S-2	G84-2 (CA) (2B)	54	48								1				
236	S-2	W1-1R	48	48									1			
237	S-2	W1-1R												1		PANEL ONLY
238	S-2	W4-1R	48	48								1				
239	S-2	R4-1	36	48								1				
240	S-2	W12-2 (15'-0")	48	48								1				
241	S-2	W4-2R	48	48								1				
242	S-2	W13-3 (45)												1		PANEL ONLY
243	S-2	W13-3 (45)	36	48									1			
244	S-2	W9-1R												1		PANEL ONLY
245	S-2	W9-1R	48	48									1			
246	S-2	G84-2 (CA) (2)	54	48								1				
247	S-2	W34CR (CA) (15'-0")	36	54								1				
248	S-2	W74L (CA)	60	60								1				
249	S-2	G92 (CA)	48	30								4				
		G27-2 (CA) (8)	21	18												
		G49 (CA)	21	9												
		G43 (CA)	21	15												
250	S-2	G92 (CA)												1		PANELS ONLY
		G27-2 (CA) (8)														
		G49 (CA)														
		G44 (CA)														
									SUBTOTAL 4			21	5	6		

(N) - NOT A SEPARATE PAY ITEM. FOR INFORMATION ONLY.

SIGN QUANTITIES

SQ-4

STATE OF CALIFORNIA - DEPARTMENT OF TRANSPORTATION
Caltrans® TRAFFIC DESIGN

FUNCTIONAL SUPERVISOR: CAMILLE ABOUFADEL
CALCULATED-DESIGNED BY: ROBERT EDEJER
CHECKED BY: SHAHIN ADIBI
REVISED BY
DATE REVISED

LAST REVISION DATE PLOTTED => 04-OCT-2016
06-21-16 TIME PLOTTED => 11:30

Dist	COUNTY	ROUTE	POST MILES TOTAL PROJECT	SHEET No.	TOTAL SHEETS
11	SD	8	T0.5/R0.7	79	162

REGISTERED CIVIL ENGINEER 06-15-16 DATE

08-22-16
PLANS APPROVAL DATE

REGISTERED PROFESSIONAL ENGINEER SHAHIN T. ADIBI No. 54839 Exp. 6-30-18 CIVIL STATE OF CALIFORNIA

THE STATE OF CALIFORNIA OR ITS OFFICERS OR AGENTS SHALL NOT BE RESPONSIBLE FOR THE ACCURACY OR COMPLETENESS OF SCANNED COPIES OF THIS PLAN SHEET.

ROADSIDE SIGN QUANTITIES

SIGN No.	SHEET No.	CODE	PANEL SIZE (N) HORIZ × VERT INCHES × INCHES	D F†	C F†	E F†	Min POST LENGTH F†	POST SIZE (N) 6 × 6 INCHES × INCHES	ROADSIDE SIGN ONE-POST EA	SIGN POST SUPPORT SYSTEM EA	INSTALL ROADSIDE SIGN PANEL ON EXISTING POST EA	INSTALL SIGN (STRAP AND SADDLE BRACKET METHOD) EA	REMOVE ROADSIDE SIGN EA	TREATED WOOD WASTE LB	REMARKS
251	S-2	G92 (CA)	48 x 30									4			
		G27-2 (CA) (8)	21 x 18												
		G49 (CA)	21 x 9												
		G44 (CA)	21 x 15												
252	S-2	W4-2R	48 x 48								1				
253	S-2	W4-2R	48 x 48								1				
254	S-2	W4-3R	48 x 48								1				
255	S-2	R91-1R (CA)	48 x 66								1				
256	S-2	W4-1R	48 x 48								1				
257	S-2	R1-2	30 x 30								1				
258	S-2	G13-2 (CA)	72 x 60									5			
		I-12	30 x 30												
		G96 (CA)	30 x 30												
		G96A (CA) (COASTER)	30 x 8												
		G96A (CA) (TROLLEY)	30 x 8												
259	S-2	W34CL (CA) (14'-10")	36 x 54								1				
260	S-2	G84 (CA)	54 x 48								1				
261	S-2	W13-2	48 x 60								2				
		W1-6R	48 x 24												
262	S-2	W1-1R	48 x 48								2				
		W13-1 (20)	24 x 24												
263	S-2	G66-56 (CA)	30 x 30								2				
		G58 (CA) (EXIT)	30 x 24												
264	S-2	W12-2 (15'-4")	48 x 48								2				
		W34A (CA) (2000 FT)	48 x 36												
265	S-2	R18AR (CA) (2 LANES)	66 x 48								1				
266	S-2	W74L (CA)	60 x 60								1				
267	S-2	G84-2 (CA) (2C)	54 x 48								1				
268	S-2	W4-1R	48 x 48								1				
269	S-2	W4-1R	48 x 48								1				
270	S-2	W11-2	36 x 36								2				
		W16-9p	24 x 12												
271	S-2	W3-2	48 x 48								1				
272	S-2	R5-1	36 x 36								2				
		R5-1a	36 x 24												
273	S-2	W11-2	36 x 36								2				
		W16-7pR	24 x 12												
								SUBTOTAL 5			28	9			

(N) - NOT A SEPARATE PAY ITEM. FOR INFORMATION ONLY.

SIGN QUANTITIES

SQ-5

STATE OF CALIFORNIA - DEPARTMENT OF TRANSPORTATION
Caltrans
TRAFFIC DESIGN

FUNCTIONAL SUPERVISOR: CAMILLE ABOUFADEL
CALCULATED-DESIGNED BY: ROBERT EDEJER
CHECKED BY: SHAHIN ADIBI
REVISED BY
DATE REVISED

LAST REVISION 06-21-16
DATE PLOTTED => 04-OCT-2016
TIME PLOTTED => 11:30

Dist	COUNTY	ROUTE	POST MILES TOTAL PROJECT	SHEET No.	TOTAL SHEETS
11	SD	8	T0.5/R0.7	80	162

REGISTERED CIVIL ENGINEER 06-15-16 DATE

08-22-16
PLANS APPROVAL DATE

REGISTERED PROFESSIONAL ENGINEER SHAHIN T. ADIBI No. 54839 Exp. 6-30-18 CIVIL STATE OF CALIFORNIA

THE STATE OF CALIFORNIA OR ITS OFFICERS OR AGENTS SHALL NOT BE RESPONSIBLE FOR THE ACCURACY OR COMPLETENESS OF SCANNED COPIES OF THIS PLAN SHEET.

ROADSIDE SIGN QUANTITIES

SIGN No.	SHEET No.	CODE	PANEL SIZE (N) HORIZ	PANEL SIZE (N) VERT	D	C	E	Min POST LENGTH	POST SIZE (N) 6 x 6	ROADSIDE SIGN ONE-POST	SIGN POST SUPPORT SYSTEM	INSTALL ROADSIDE SIGN PANEL ON EXISTING POST	INSTALL SIGN (STRAP AND SADDLE BRACKET METHOD)	REMOVE ROADSIDE SIGN	TREATED WOOD WASTE	REMARKS
			INCHES	INCHES	F†	F†	F†	F†	INCHES x INCHES	EA	EA	EA	EA	EA	LB	
274	S-2	R6-1R	36	12								1				
275	S-2	R6-1R	36	12								1				
276	S-2	W4-14 (CA) (20)	60	60								1				
277	S-2	W1-8R	18	24								2				
		OM1-3	18	18												
278	S-2	W1-8R	18	24								2				
		OM1-3	18	18												
279	S-2	W8-5	48	48								1				
280	S-2	W1-8R	18	24								2				
		OM1-3	18	18												
281	S-2	W1-8R	18	24								2				
		OM1-3	18	18												
282	S-2	W1-8R	18	24								2				
		OM1-3	18	18												
283	S-2	W1-8R	18	24								2				
		OM1-3	18	18												
284	S-2	W1-8R	18	24								2				
		OM1-3	18	18												
285	S-2	W1-8R	18	24								2				
		OM1-3	18	18												
286	S-2	W1-8R	18	24								2				
		OM1-3	18	18												
287	S-2	W1-8R	18	24								2				
		OM1-3	18	18												
288	S-2	R5-10a	30	36								1				
289	S-2	G77 (CA)	132	54								1				
290	S-2	G13-2 (CA)												1		PANELS ONLY
		I-12														
		G96 (CA)														
		G96A (CA) (COASTER)														
		G96A (CA) (TROLLEY)														
									SUBTOTAL 6			26		1		
									SUBTOTAL 5			28	9			
									SUBTOTAL 4			21	6	6		
									SUBTOTAL 3	2	1	23	7	6	465	
									SUBTOTAL 2	3	1	20	7	5	310	
									SUBTOTAL 1			31	2	1		
									TOTAL	5	2	149	31	19	775*	

(N) - NOT A SEPARATE PAY ITEM. FOR INFORMATION ONLY.
* - SEE "Q" SHEETS FOR ADDITIONAL QUANTITIES.

SIGN QUANTITIES

SQ-6

STATE OF CALIFORNIA - DEPARTMENT OF TRANSPORTATION
Caltrans
TRAFFIC DESIGN

FUNCTIONAL SUPERVISOR: CAMILLE ABOUFADEL
CALCULATED-DESIGNED BY: ROBERT EDEJER
CHECKED BY: SHAHIN ADIBI
REVISED BY
DATE REVISED

LAST REVISION 06-21-16
DATE PLOTTED => 04-OCT-2016
TIME PLOTTED => 11:30

Dist	COUNTY	ROUTE	POST MILES TOTAL PROJECT	SHEET No.	TOTAL SHEETS
11	SD	8	T0.5/R0.7	81	162

REGISTERED CIVIL ENGINEER 06-15-16 DATE

08-22-16
PLANS APPROVAL DATE

REGISTERED PROFESSIONAL ENGINEER SHAHIN T. ADIBI No. 54839 Exp. 6-30-18 CIVIL STATE OF CALIFORNIA

THE STATE OF CALIFORNIA OR ITS OFFICERS OR AGENTS SHALL NOT BE RESPONSIBLE FOR THE ACCURACY OR COMPLETENESS OF SCANNED COPIES OF THIS PLAN SHEET.

NOTES:

1. FEDERAL (MUTCD) SIGN CODES ARE SHOWN UNLESS DESIGNATED BY (CA) INDICATING STANDARD CALIFORNIA SIGN SPECIFICATIONS.
2. REFER TO "ROADSIDE SIGN QUANTITIES" CHART FOR FURTHER INFORMATION.
3. FY - FLUORESCENT YELLOW.
4. FYG - FLUORESCENT YELLOW GREEN.

FURNISH ROADSIDE SIGN PANEL

SIGN No.	CODE	PANEL SIZE Horiz (INCHES)	PANEL SIZE Vert (INCHES)	BACKGROUND SHEETING COLOR	BACKGROUND RETRO-REFLECTIVE ASTM TYPE	LEGEND SHEETING COLOR	LEGEND REFLECTIVE ASTM TYPE	LEGEND BLACK (NON-REFLECTIVE)	SIGN PANEL FURNISH SINGLE SHEET ALUMINUM SIGN FOR RETROREFLECTIVE SHEETING (TYPE XI) (SQFT) UNFRAMED 0.063"	UNFRAMED 0.080"	FRAMED 0.063"	FRAMED 0.080"	FURNISH LAMINATED PANEL SIGN FOR RETROREFLECTIVE SHEETING (TYPE XI) (SQFT) TYPE B 1.000"	RETROREFLECTIVE SHEETING (TYPE XI) (SQFT)	PROTECTIVE OVERLAY PREMIUM FILM
102	R6-1R	36	12	BLACK/WHITE	XI	BLACK		×	3.00					3.00	×
	R6-1L	36	12	BLACK/WHITE	XI	BLACK		×	3.00					3.00	×
103	R5-1	36	36	RED	XI	WHITE	XI		9.00					9.00	×
	R5-1a	36	24	RED	XI	WHITE	XI		6.00					6.00	×
104	R5-1	36	36	RED	XI	WHITE	XI		9.00					9.00	×
	R5-1a	36	24	RED	XI	WHITE	XI		6.00					6.00	×
	R6-1L	36	12	BLACK/WHITE	XI	BLACK		×	3.00					3.00	×
105	R1-1	30	30	RED	XI	WHITE	XI		6.25					6.25	×
106	M4-6	24	12	BLUE	XI	WHITE	XI		2.00					2.00	×
	G27-2 (CA) (8)	24	24	RED/BLUE	XI	WHITE	XI		4.00					4.00	×
	G66-56 (CA)	24	24	BLUE	XI	WHITE	XI		4.00					4.00	×
	R5-1	36	36	RED	XI	WHITE	XI		9.00					9.00	×
	R5-1a	36	24	RED	XI	WHITE	XI		6.00					6.00	×
107	R58-1 (CA)	48	26	WHITE	XI	BLACK		×		8.67				8.67	×
108	W2-4	48	48	FY	XI	BLACK		×		16.00				16.00	×
	W16-2 (700)	24	18	FY	XI	BLACK		×	3.00					3.00	×
109	W3-3	48	48	FY	XI	GREEN/RED/BLACK	XI	×		16.00				16.00	×
110	R3-18	30	30	WHITE	XI	RED/BLACK	XI		6.25					6.25	×
111	W1-6R	48	24	FY	XI	BLACK		×		8.00				8.00	×
112	W1-6R	48	24	FY	XI	BLACK		×		8.00				8.00	×
113	W84 (CA) (Mod)	48	48	FY	XI	BLACK		×		16.00				16.00	×
114	W84 (CA) (Mod)	48	48	FY	XI	BLACK		×		16.00				16.00	×
115	R6-4 (CA)	48	60	WHITE	XI	BLACK		×		20.00				20.00	×
	R48-1 (CA)	36	18	WHITE	XI	BLACK		×	4.50					4.50	×
116	R47 (CA)	54	36	WHITE	XI	BLACK		×		13.50				13.50	×
117	R3-18	30	30	WHITE	XI	RED/BLACK	XI	×	6.25					6.25	×
118	W2-4	48	48	FY	XI	BLACK		×		16.00				16.00	×
	W16-2 (700)	24	18	FY	XI	BLACK		×	3.00					3.00	×
119	W3-3	48	48	FY	XI	GREEN/RED/BLACK	XI	×		16.00				16.00	×
120	S32 (CA)	54	42	PANTONE 327C	XI	WHITE	XI			15.75				15.75	×
	S32-1 (CA)	15	18	PANTONE 327C	XI	WHITE	XI		1.88					1.88	×
121	R5-1	36	36	RED	XI	WHITE	XI		9.00					9.00	×
	R5-1a	36	24	RED	XI	WHITE	XI		6.00					6.00	×
								SUBTOTAL 1	110.13	169.92				280.05	

SIGN QUANTITIES

SQ-7

STATE OF CALIFORNIA - DEPARTMENT OF TRANSPORTATION
Caltrans
TRAFFIC DESIGN

FUNCTIONAL SUPERVISOR: CAMILLE ABOUFADEL
CALCULATED-DESIGNED BY: ROBERT EDEJER
CHECKED BY: SHAHIN ADIBI
REVISED BY
DATE REVISED

LAST REVISION DATE PLOTTED => 04-OCT-2016
06-21-16 TIME PLOTTED => 11:30

Dist	COUNTY	ROUTE	POST MILES TOTAL PROJECT	SHEET No.	TOTAL SHEETS
11	SD	8	T0.5/R0.7	82	162

REGISTERED CIVIL ENGINEER 06-15-16 DATE

08-22-16
PLANS APPROVAL DATE

REGISTERED PROFESSIONAL ENGINEER SHAHIN T. ADIBI No. 54839 Exp. 6-30-18 CIVIL STATE OF CALIFORNIA

THE STATE OF CALIFORNIA OR ITS OFFICERS OR AGENTS SHALL NOT BE RESPONSIBLE FOR THE ACCURACY OR COMPLETENESS OF SCANNED COPIES OF THIS PLAN SHEET.

FURNISH ROADSIDE SIGN PANEL

SIGN No.	CODE	PANEL SIZE Horiz (INCHES)	PANEL SIZE Vert (INCHES)	BACKGROUND SHEETING COLOR	BACKGROUND RETRO-REFLECTIVE ASTM TYPE	LEGEND SHEETING COLOR	LEGEND REFLECTIVE ASTM TYPE	LEGEND BLACK (NON-REFLECTIVE)	SIGN PANEL FURNISH SINGLE SHEET ALUMINUM SIGN FOR RETROREFLECTIVE SHEETING (TYPE XI) (SQFT) UNFRAMED 0.063"	UNFRAMED 0.080"	FRAMED 0.063"	FRAMED 0.080"	FURNISH LAMINATED PANEL SIGN FOR RETROREFLECTIVE SHEETING (TYPE XI) (SQFT) TYPE B 1.000"	RETROREFLECTIVE SHEETING (TYPE XI) (SQFT)	PROTECTIVE OVERLAY PREMIUM FILM
122	R5-1	36	36	RED	XI	WHITE	XI		9.00					9.00	×
	R5-1a	36	24	RED	XI	WHITE	XI		6.00					6.00	×
123	R6-1R	36	12	RED	XI	WHITE	XI		3.00					3.00	×
	R6-1L	36	12	BLACK/WHITE	XI	BLACK		×	3.00					3.00	×
124	SG1-2 (CA)	78	36	GREEN	XI	WHITE	XI				19.50			19.50	×
125	W4-3R	48	48	FY	XI	BLACK		×		16.00				16.00	×
126	G92 (CA)	48	30	GREEN	XI	WHITE	XI			10.00				10.00	×
	G27-2 (CA) (8)	21	18	RED/BLUE	XI	WHITE	XI		2.63					2.63	×
	G49 (CA)	21	9	BLUE	XI	WHITE	XI		1.31					1.31	×
	G43 (CA)	21	48	BLUE	XI	WHITE	XI		7.00					7.00	×
127	W69 (CA)	60	60	FY	XI	BLACK		×			25.00			25.00	×
128	W4-3R	48	48	FY	XI	BLACK		×		16.00				16.00	×
129	R91-1L (CA)	48	66	BLACK/WHITE	XI	BLACK/WHITE	XI	×		22.00				22.00	×
131	R91-1L (CA)	48	66	BLACK/WHITE	XI	BLACK/WHITE	XI	×		22.00				22.00	×
133	W4-1R	48	48	FY	XI	BLACK		×		16.00				16.00	×
134	R10-6R	24	36	WHITE	XI	BLACK		×	6.00					6.00	×
	R89-2 (CA) (1)	24	10	WHITE	XI	BLACK		×	1.67					1.67	×
135	R18A (CA) (2)	66	48	WHITE	XI	BLACK		×			22.00			22.00	×
136	W74L (CA)	60	60	FY	XI	BLACK		×			25.00			25.00	×
137	W74L (CA)	60	60	FY	XI	BLACK		×			25.00			25.00	×
138	W74L (CA)	60	60	FY	XI	BLACK		×			25.00			25.00	×
139	W12-2 (14'-9")	48	48	FY	XI	BLACK		×		16.00				16.00	×
	W34A (CA) (200 FT)	48	36	FY	XI	BLACK		×		12.00				12.00	×
140	R10-6L	24	36	WHITE	XI	BLACK		×	6.00					6.00	×
	R89-2 (CA) (1)	24	10	WHITE	XI	BLACK		×	1.67					1.67	×
142	W4-1R	48	48	FY	XI	BLACK		×		16.00				16.00	×
144	G92 (CA)	48	30	GREEN	XI	WHITE	XI			10.00				10.00	×
	G27-2 (CA) (8)	21	18	RED/BLUE	XI	WHITE	XI		2.63					2.63	×
	G49 (CA)	21	9	BLUE	XI	WHITE	XI		1.31					1.31	×
	G44 (CA)	21	15	BLUE	XI	WHITE	XI		2.19					2.19	×
145	W3-8	48	48	FY	XI	BLACK		×		16.00				16.00	×
147	R91-1L (CA)	48	66	BLACK/WHITE	XI	BLACK/WHITE	XI			22.00				22.00	×
149	R10-6L	24	36	WHITE	XI	BLACK		×	6.00					6.00	×
	R89-2 (CA) (2)	24	10	WHITE	XI	BLACK		×	1.67					1.67	×
151	R10-6R	24	36	WHITE	XI	BLACK		×	6.00					6.00	×
	R89-2 (CA) (2)	24	10	WHITE	XI	BLACK		×	1.67					1.67	×
153	W69 (CA)	60	60	FY	XI	BLACK		×			25.00			25.00	×
155	W1-1R	48	48	FY	XI	BLACK		×		16.00				16.00	×
	W13-1 (20)	24	24	FY	XI	BLACK		×	4.00					4.00	×
							SUBTOTAL 2		72.75	210.00	166.50			449.25	

SIGN QUANTITIES

SQ-8

STATE OF CALIFORNIA - DEPARTMENT OF TRANSPORTATION
Caltrans
TRAFFIC DESIGN

FUNCTIONAL SUPERVISOR: CAMILLE ABOUFADEL
CALCULATED-DESIGNED BY: ROBERT EDEJER
CHECKED BY: SHAHIN ADIBI
REVISED BY
DATE REVISED

LAST REVISION 06-21-16
DATE PLOTTED => 04-OCT-2016
TIME PLOTTED => 11:30

Dist	COUNTY	ROUTE	POST MILES TOTAL PROJECT	SHEET No.	TOTAL SHEETS
11	SD	8	T0.5/R0.7	83	162

REGISTERED CIVIL ENGINEER 06-15-16 DATE

08-22-16
PLANS APPROVAL DATE

REGISTERED PROFESSIONAL ENGINEER SHAHIN T. ADIBI No. 54839 Exp. 6-30-18 CIVIL STATE OF CALIFORNIA

THE STATE OF CALIFORNIA OR ITS OFFICERS OR AGENTS SHALL NOT BE RESPONSIBLE FOR THE ACCURACY OR COMPLETENESS OF SCANNED COPIES OF THIS PLAN SHEET.

FURNISH ROADSIDE SIGN PANEL

SIGN No.	CODE	PANEL SIZE Horiz (INCHES)	PANEL SIZE Vert (INCHES)	BACKGROUND SHEETING COLOR	BACKGROUND RETRO-REFLECTIVE ASTM TYPE	LEGEND SHEETING COLOR	LEGEND REFLECTIVE ASTM TYPE	LEGEND BLACK (NON-REFLECTIVE)	SIGN PANEL: FURNISH SINGLE SHEET ALUMINUM SIGN FOR RETROREFLECTIVE SHEETING (TYPE XI) (SQFT) UNFRAMED 0.063"	UNFRAMED 0.080"	FRAMED 0.063"	FRAMED 0.080"	FURNISH LAMINATED PANEL SIGN FOR RETROREFLECTIVE SHEETING (TYPE XI) (SQFT) TYPE B 1.000"	RETROREFLECTIVE SHEETING (TYPE XI) (SQFT)	PROTECTIVE OVERLAY PREMIUM FILM
201	G86 (CA)	78	26	GREEN	XI	WHITE	XI				14.08			14.08	×
	G86 (CA)	84	24	GREEN	XI	WHITE	XI					14.00		14.00	×
202	G83-5 (CA)	174	72	GREEN	XI	WHITE	XI						87.00	87.00	×
203	S32 (CA)	54	42	PANTONE 327C	XI	WHITE	XI			15.75				15.75	×
	S32-1 (CA)	15	18	PANTONE 327C	XI	WHITE	XI		1.88					1.88	×
204	W4-2R	48	48	FY	XI	BLACK		×		16.00				16.00	×
205	W9-1R	48	48	FY	XI	BLACK		×		16.00				16.00	×
206	W4-3R	48	48	FY	XI	BLACK		×		16.00				16.00	×
207	W9-1R	48	48	FY	XI	BLACK		×		16.00				16.00	×
208	W12-2 (14'-9")	48	48	FY	XI	BLACK		×		16.00				16.00	×
209	W4-2R	48	48	FY	XI	BLACK		×		16.00				16.00	×
210	R4-1	36	48	WHITE	XI	BLACK		×	12.00					12.00	×
211	R4-1	36	48	WHITE	XI	BLACK		×	12.00					12.00	×
212	W4-3R	48	48	FY	XI	BLACK		×		16.00				16.00	×
214	W12-2 (15'-4")	48	48	FY	XI	BLACK		×		16.00				16.00	×
215	R91-1R (CA)	48	66	BLACK/WHITE	XI	BLACK/WHITE	XI	×		22.00				22.00	×
216	W1-8R	18	24	FY	XI	BLACK		×	3.00					3.00	×
	OM1-3	18	18	FY	XI	BLACK		×	2.25					2.25	×
217	W1-8R	18	24	FY	XI	BLACK		×	3.00					3.00	×
	OM1-3	18	18	FY	XI	BLACK		×	2.25					2.25	×
218	W1-1R	36	36	FY	XI	BLACK		×	9.00					9.00	×
	W13-1 (25)	24	24	FY	XI	BLACK		×	4.00					4.00	×
220	G49 (CA)	30	15	FY	XI	BLACK		×	3.13					3.13	×
	G27-2 (CA) (8)	36	36	RED/BLUE	XI	WHITE	XI		9.00					9.00	×
221	W4-1R	48	48	FY	XI	BLACK		×		16.00				16.00	×
222	G86 (CA)	168	54	GREEN	XI	WHITE	XI						63.00	63.00	×
223	W12-1	48	48	FY	XI	BLACK		×		16.00				16.00	×
225	G66-56 (CA)	24	24	BLUE	XI	WHITE	XI		4.00					4.00	×
	M6-3 (INTERSTATE)	21	15	BLUE	XI	WHITE	XI		2.19					2.19	×
226	W34CL (CA) (15'-0")	36	54	FY	XI	BLACK		×	13.50					13.50	×
227	G84-2 (CA) (20)	54	48	GREEN	XI	WHITE	XI			18.00				18.00	×
228	W3-8	48	48	FY	XI	BLACK		×		16.00				16.00	×
229	W3-8	48	48	FY	XI	BLACK		×		16.00				16.00	×
230	G84 (CA)	54	48	GREEN	XI	WHITE	XI			18.00				18.00	×
								SUBTOTAL 3	81.20	265.75	14.08	14.00	150.00	525.03	

SIGN QUANTITIES

SQ-9

STATE OF CALIFORNIA - DEPARTMENT OF TRANSPORTATION
Caltrans
TRAFFIC DESIGN

FUNCTIONAL SUPERVISOR: CAMILLE ABOUFADEL
CALCULATED-DESIGNED BY: ROBERT EDEJER
CHECKED BY: SHAHIN ADIBI
REVISED BY
DATE REVISED

LAST REVISION 06-21-16 | DATE PLOTTED => 04-OCT-2016 | TIME PLOTTED => 11:30

Dist	COUNTY	ROUTE	POST MILES TOTAL PROJECT	SHEET No.	TOTAL SHEETS
11	SD	8	T0.5/R0.7	84	162

REGISTERED CIVIL ENGINEER 06-15-16 DATE

08-22-16
PLANS APPROVAL DATE

REGISTERED PROFESSIONAL ENGINEER SHAHIN T. ADIBI No. 54839 Exp. 6-30-18 CIVIL STATE OF CALIFORNIA

THE STATE OF CALIFORNIA OR ITS OFFICERS OR AGENTS SHALL NOT BE RESPONSIBLE FOR THE ACCURACY OR COMPLETENESS OF SCANNED COPIES OF THIS PLAN SHEET.

FURNISH ROADSIDE SIGN PANEL

SIGN No.	CODE	PANEL SIZE Horiz (INCHES)	PANEL SIZE Vert (INCHES)	BACKGROUND SHEETING COLOR	BACKGROUND RETRO-REFLECTIVE ASTM TYPE	LEGEND SHEETING COLOR	LEGEND REFLECTIVE ASTM TYPE	LEGEND BLACK (NON-REFLECTIVE)	SIGN PANEL FURNISH SINGLE SHEET ALUMINUM SIGN FOR RETROREFLECTIVE SHEETING (TYPE XI) (SQFT) UNFRAMED 0.063"	UNFRAMED 0.080"	FRAMED 0.063"	FRAMED 0.080"	FURNISH LAMINATED PANEL SIGN FOR RETROREFLECTIVE SHEETING (TYPE XI) (SQFT) TYPE B 1.000"	RETROREFLECTIVE SHEETING (TYPE XI) (SQFT)	PROTECTIVE OVERLAY PREMIUM FILM
232	W4-2R	48	48	FY	XI	BLACK		×		16.00				16.00	×
233	W34CR (CA) (15'-0")	36	54	FY	XI	BLACK		×	13.50					13.50	×
234	W4-14 (CA) (25)	60	60	FY	XI	BLACK		×			25.00			25.00	×
235	G84-2 (CA) (2B)	54	48	GREEN	XI	WHITE	XI			18.00				18.00	×
236	W1-1R	48	48	FY	XI	BLACK		×		16.00				16.00	×
238	W4-1R	48	48	FY	XI	BLACK		×		16.00				16.00	×
239	R4-1	36	48	WHITE	XI	BLACK		×	12.00					12.00	×
240	W12-2 (15'-0")	48	48	FY	XI	BLACK		×		16.00				16.00	×
241	W4-2R	48	48	FY	XI	BLACK		×		16.00				16.00	×
243	W13-3 (45)	36	48	FY	XI	BLACK		×	12.00					12.00	×
245	W9-1R	48	48	FY	XI	BLACK		×		16.00				16.00	×
246	G84-2 (CA) (2)	54	48	GREEN	XI	WHITE	XI			18.00				18.00	×
247	W34CR (CA) (15'-0")	36	54	FY	XI	BLACK		×	13.50					13.50	×
248	W74L (CA)	60	60	FY	XI	BLACK		×			25.00			25.00	×
249	G92 (CA)	48	30	GREEN	XI	WHITE	XI			10.00				10.00	×
	G27-2 (CA) (8)	21	18	RED/BLUE	XI	WHITE	XI		2.63					2.63	×
	G49 (CA)	21	9	BLUE	XI	WHITE	XI		1.31					1.31	×
	G43 (CA)	21	15	BLUE	XI	WHITE	XI		2.19					2.19	×
251	G92 (CA)	48	30	GREEN	XI	WHITE	XI			10.00				10.00	×
	G27-2 (CA) (8)	21	18	RED/BLUE	XI	WHITE	XI		2.63					2.63	×
	G49 (CA)	21	9	BLUE	XI	WHITE	XI		1.31					1.31	×
	G44 (CA)	21	15	BLUE	XI	WHITE	XI		2.19					2.19	×
252	W4-2R	48	48	FY	XI	BLACK		×		16.00				16.00	×
253	W4-2R	48	48	FY	XI	BLACK		×		16.00				16.00	×
254	W4-3R	48	48	FY	XI	BLACK		×		16.00				16.00	×
255	R91-1R (CA)	48	66	BLACK/WHITE	XI	BLACK/WHITE	XI	×		22.00				22.00	×
256	W4-1R	48	48	FY	XI	BLACK		×		16.00				16.00	×
257	R1-2	30	30	RED/WHITE	XI	RED	XI		6.25					6.25	×
258	G13-2 (CA)	72	60	CREAM	XI	BROWN	XI				30.00			30.00	×
	I-12	30	30	GREEN	XI	WHITE	XI		6.25					6.25	×
	G96 (CA)	30	30	GREEN	XI	WHITE	XI		6.25					6.25	×
	G96A (CA) (COASTER)	30	8	GREEN	XI	WHITE	XI		1.67					1.67	×
	G96A (CA) (TROLLEY)	30	8	GREEN	XI	WHITE	XI		1.67					1.67	×
259	W34CL (CA) (14'-10")	36	54	FY	XI	BLACK		×	13.50					13.50	×
260	G84 (CA)	54	48	GREEN	XI	WHITE	XI			18.00				18.00	×
261	W13-2	48	60	FY	XI	BLACK		×		20.00				20.00	×
	W1-6R	48	24	FY	XI	BLACK		×		8.00				8.00	×
							SUBTOTAL 4		98.83	284.00	80.00			462.83	

SIGN QUANTITIES

SQ-10

REVISED BY | DATE REVISED
ROBERT EDEJER | SHAHIN ADIBI
CALCULATED-DESIGNED BY | CHECKED BY
FUNCTIONAL SUPERVISOR
CAMILLE ABOUFADEL

STATE OF CALIFORNIA - DEPARTMENT OF TRANSPORTATION
Caltrans
TRAFFIC DESIGN

LAST REVISION 06-21-16 | DATE PLOTTED => 04-OCT-2016 | TIME PLOTTED => 11:30

Dist	COUNTY	ROUTE	POST MILES TOTAL PROJECT	SHEET No.	TOTAL SHEETS
11	SD	8	T0.5/R0.7	85	162

REGISTERED CIVIL ENGINEER 06-15-16 DATE

08-22-16
PLANS APPROVAL DATE

REGISTERED PROFESSIONAL ENGINEER SHAHIN T. ADIBI No. 54839 Exp. 6-30-18 CIVIL STATE OF CALIFORNIA

THE STATE OF CALIFORNIA OR ITS OFFICERS OR AGENTS SHALL NOT BE RESPONSIBLE FOR THE ACCURACY OR COMPLETENESS OF SCANNED COPIES OF THIS PLAN SHEET.

FURNISH ROADSIDE SIGN PANEL

SIGN No.	CODE	PANEL SIZE Horiz (INCHES)	PANEL SIZE Vert (INCHES)	BACKGROUND SHEETING COLOR	BACKGROUND RETRO-REFLECTIVE ASTM TYPE	LEGEND SHEETING COLOR	LEGEND REFLECTIVE ASTM TYPE	LEGEND BLACK (NON-REFLECTIVE)	SIGN PANEL FURNISH SINGLE SHEET ALUMINUM SIGN FOR RETROREFLECTIVE SHEETING (TYPE XI) (SQFT) UNFRAMED 0.063"	UNFRAMED 0.080"	FRAMED 0.063"	FRAMED 0.080"	FURNISH LAMINATED PANEL SIGN FOR RETROREFLECTIVE SHEETING (TYPE XI) (SQFT) TYPE B 1.000"	RETROREFLECTIVE SHEETING (TYPE XI) (SQFT)	PROTECTIVE OVERLAY PREMIUM FILM
262	W1-1R	48	48	FY	XI	BLACK		×		16.00				16.00	×
	W13-1 (20)	24	24	FY	XI	BLACK		×	4.00					4.00	×
263	G66-56 (CA)	30	30	BLUE	XI	WHITE	XI		6.25					6.25	×
	G58 (CA) (EXIT)	30	24	GREEN	XI	WHITE	XI		5.00					5.00	×
264	W12-2 (15'-4")	48	48	FY	XI	BLACK		×		16.00				16.00	×
	W34A (CA) (2000 FT)	48	36	FY	XI	BLACK		×		12.00				12.00	×
265	R18AR (CA) (2 LANES)	66	48	WHITE	XI	BLACK		×			22.00			22.00	×
266	W74L (CA)	60	60	FY	XI	BLACK		×			25.00			25.00	×
267	G84-2 (CA) (2C)	54	48	GREEN	XI	WHITE	XI			18.00				18.00	×
268	W4-1R	48	48	FY	XI	BLACK		×		16.00				16.00	×
269	W4-1R	48	48	FY	XI	BLACK		×		16.00				16.00	×
270	W11-2	36	36	FYG	XI	BLACK		×	9.00					9.00	×
	W16-9p	24	12	FYG	XI	BLACK		×	2.00					2.00	×
271	W3-2	48	48	FY	XI	WHITE/RED/BLACK	XI	×		16.00				16.00	×
272	R5-1	36	36	RED	XI	WHITE	XI		9.00					9.00	×
	R5-1a	36	24	RED	XI	WHITE	XI		6.00					6.00	×
273	W11-2	36	36	FYG	XI	BLACK		×	9.00					9.00	×
	W16-7pR	24	12	FYG	XI	BLACK		×	2.00					2.00	×
274	R6-1R	36	12	BLACK/WHITE	XI	BLACK		×	3.00					3.00	×
275	R6-1R	36	12	BLACK/WHITE	XI	BLACK		×	3.00					3.00	×
276	W4-14 (CA) (20)	60	60	FY	XI	BLACK		×			25.00			25.00	×
277	W1-8R	18	24	FY	XI	BLACK		×	3.00					3.00	×
	OM1-3	18	18	FY	XI	BLACK		×	2.25					2.25	×
278	W1-8R	18	24	FY	XI	BLACK		×	3.00					3.00	×
	OM1-3	18	18	FY	XI	BLACK		×	2.25					2.25	×
279	W8-5	48	48	FY	XI	BLACK		×		16.00				16.00	×
280	W1-8R	18	24	FY	XI	BLACK		×	3.00					3.00	×
	OM1-3	18	18	FY	XI	BLACK		×	2.25					2.25	×
281	W1-8R	18	24	FY	XI	BLACK		×	3.00					3.00	×
	OM1-3	18	18	FY	XI	BLACK		×	2.25					2.25	×
282	W1-8R	18	24	FY	XI	BLACK		×	3.00					3.00	×
	OM1-3	18	18	FY	XI	BLACK		×	2.25					2.25	×
283	W1-8R	18	24	FY	XI	BLACK		×	3.00					3.00	×
	OM1-3	18	18	FY	XI	BLACK		×	2.25					2.25	×
284	W1-8R	18	24	FY	XI	BLACK		×	3.00					3.00	×
	OM1-3	18	18	FY	XI	BLACK		×	2.25					2.25	×
							SUBTOTAL 5		95.00	126.00	72.00			293.00	

SIGN QUANTITIES

SQ-11

REVISED BY | DATE REVISED
ROBERT EDEJER | SHAHIN ADIBI
CALCULATED-DESIGNED BY | CHECKED BY
FUNCTIONAL SUPERVISOR
CAMILLE ABOUFADEL

STATE OF CALIFORNIA - DEPARTMENT OF TRANSPORTATION
Caltrans
TRAFFIC DESIGN

LAST REVISION 06-21-16 | DATE PLOTTED => 04-OCT-2016 | TIME PLOTTED => 11:30

Dist	COUNTY	ROUTE	POST MILES TOTAL PROJECT	SHEET No.	TOTAL SHEETS
11	SD	8	T0.5/R0.7	86	162

REGISTERED CIVIL ENGINEER 06-15-16 DATE

08-22-16
PLANS APPROVAL DATE

REGISTERED PROFESSIONAL ENGINEER SHAHIN T. ADIBI No. 54839 Exp. 6-30-18 CIVIL STATE OF CALIFORNIA

THE STATE OF CALIFORNIA OR ITS OFFICERS OR AGENTS SHALL NOT BE RESPONSIBLE FOR THE ACCURACY OR COMPLETENESS OF SCANNED COPIES OF THIS PLAN SHEET.

FURNISH ROADSIDE SIGN PANEL

SIGN No.	CODE	PANEL SIZE Horiz (INCHES)	PANEL SIZE Vert (INCHES)	BACKGROUND SHEETING COLOR	BACKGROUND RETRO-REFLECTIVE ASTM TYPE	LEGEND SHEETING COLOR	LEGEND REFLECTIVE ASTM TYPE	LEGEND BLACK (NON-REFLECTIVE)	SIGN PANEL FURNISH SINGLE SHEET ALUMINUM SIGN FOR RETROREFLECTIVE SHEETING (TYPE XI) (SQFT) UNFRAMED 0.063"	UNFRAMED 0.080"	FRAMED 0.063"	FRAMED 0.080"	FURNISH LAMINATED PANEL SIGN FOR RETROREFLECTIVE SHEETING (TYPE XI) (SQFT) 1"-TYPE B 1.000"	RETROREFLECTIVE SHEETING (TYPE XI) (SQFT)	PROTECTIVE OVERLAY PREMIUM FILM
285	W1-8R	18	24	FY	XI	BLACK		×	3.00					3.00	×
	OM1-3	18	18	FY	XI	BLACK		×	2.25					2.25	×
286	W1-8R	18	24	FY	XI	BLACK		×	3.00					3.00	×
	OM1-3	18	18	FY	XI	BLACK		×	2.25					2.25	×
287	W1-8R	18	24	FY	XI	BLACK		×	3.00					3.00	×
	OM1-3	18	18	FY	XI	BLACK		×	2.25					2.25	×
288	R5-10a	30	36	WHITE	XI	BLACK		×	7.50					7.50	×
289	G77 (CA)	132	54	GREEN	XI	WHITE	XI						49.50	49.50	×
								SUBTOTAL 6	23.25				49.50	72.75	
								SUBTOTAL 5	95.00	126.00	72.00			293.00	
								SUBTOTAL 4	98.83	284.00	80.00			462.83	
								SUBTOTAL 3	81.20	265.75	14.08	14.00	150.00	525.03	
								SUBTOTAL 2	72.75	210.00	166.50			449.25	
								SUBTOTAL 1	110.13	169.92				280.05	
								TOTAL	481.16	1,055.67	332.58	14.00	199.50	2,082.91	

SIGN QUANTITIES

SQ-12

STATE OF CALIFORNIA - DEPARTMENT OF TRANSPORTATION
Caltrans
TRAFFIC DESIGN

FUNCTIONAL SUPERVISOR: CAMILLE ABOUFADEL
CALCULATED-DESIGNED BY: ROBERT EDEJER
CHECKED BY: SHAHIN ADIBI
REVISED BY
DATE REVISED

LAST REVISION 06-21-16
DATE PLOTTED => 04-OCT-2016
TIME PLOTTED => 11:30

Dist	COUNTY	ROUTE	POST MILES TOTAL PROJECT	SHEET No.	TOTAL SHEETS
11	SD	8	T0.5/R0.7	87	162

REGISTERED CIVIL ENGINEER 06-15-16 DATE

08-22-16
PLANS APPROVAL DATE

REGISTERED PROFESSIONAL ENGINEER SOLOMON TADESSE No. C62773 Exp. 06-30-18 CIVIL STATE OF CALIFORNIA

THE STATE OF CALIFORNIA OR ITS OFFICERS OR AGENTS SHALL NOT BE RESPONSIBLE FOR THE ACCURACY OR COMPLETENESS OF SCANNED COPIES OF THIS PLAN SHEET.

ROADWAY QUANTITIES

ROUTE	LINE DESIGNATION	DIRECTION	STATION BEGIN	STATION END	LENGTH (N) (LF)	No. OF TRAVELWAY LANES (EA)	LANE WIDTH (LF)	SHOULDER WIDTH (N) INSIDE BEGIN (LF)	SHOULDER WIDTH (N) INSIDE END (LF)	SHOULDER WIDTH (N) OUTSIDE BEGIN (LF)	SHOULDER WIDTH (N) OUTSIDE END (LF)	REMOVE TRAVELWAY AC (N) 0.25′ (SQYD)	REMOVE SHOULDER AC (N) 0.33′ (SQYD)	COLD PLANE AC PAVEMENT Shldr 0.15′ (SQYD)	ROADWAY EXCAVATION 0.25′ (CY)	ROADWAY EXCAVATION 0.33′ (CY)	RUBBERIZED HOT MIX ASPHALT (GAP-GRADED) TRAVELWAY & SHOULDERS 0.15′ (TON)	RUBBERIZED HOT MIX ASPHALT (GAP-GRADED) TRAVELWAY & SHOULDERS 0.15′ (TON)	HOT MIX ASPHALT (TYPE A) TRAVELWAY & SHOULDERS 0.10′ (TON)	HOT MIX ASPHALT (TYPE A) TRAVELWAY & SHOULDERS 0.18′ (TON)	TACK COAT (TON)	IMPORTED BORROW (CY)	12" RUMBLE STRIP (ASPHALT Conc PAVEMENT) OUTSIDE (STA)
8	"S33"	EB	32+80.75	46+68.12	1,387.37	2	12	18	18	10	10	3,699.65		4,316.26	308.30		761.51		234.31		2.34	38.54	10.68
	"5VE1"		75+69.94	79+65.20	395.26	2	12	18	16	10	10	1,054.03		1,185.78	87.84		212.78		66.76		0.65	10.98	3.95
	"5VE1"		79+65.20	92+81.00	1,315.80	2	12	16	5	10	10	3,508.80		2,997.10	292.40		618.06		222.22		1.90	36.55	13.16
	"5VE1"		92+81.00	102+28.00	947.00	2	12	5	5	10	10	2,525.33		1,578.33	210.44		389.85		159.94		1.20	26.31	7.99
	"5VE1"		105+42.00	111+90.00	648.00			10	10	8	8			1,296.00			123.12				0.38	18.00	
	"5VE1"		111+90.00	119+32.00	742.00			10	10	0	0			824.44			78.32				0.24	20.61	
	"5VE1"		119+32.00	125+60.00	628.00			10	10	18	8			1,604.89			152.46				0.47	17.44	
	"5VE1"		125+60.00	148+15.00	2,255.00			10	10	8	8			4,510.00			428.45				1.32	62.64	18.4
	"5VE1"		148+15.00	151+55.00	340.00			10	10	8	8			680.00			64.60				0.20	9.44	
	"5VE1"		151+55.00	161+80.00	1,025.00			2	2	8	8			1,138.89			108.19				0.33	28.47	
	"2E1"-"11SD8"		143+50.00	149+36.00	586.00			8	8	4	8			911.56			86.60				0.27	16.28	
	"11SD8"		149+36.00	152+40.00	304.00			8	8	0	0			270.22			25.67				0.08	8.44	
	"11SD8"		153+90.00	158+91.00	501.00			10	10	8	8			1,002.00			95.19				0.29	13.92	
	"11SD8"		158+91.00	161+00.00	209.00			8	8	6	6			232.22			22.06				0.09	5.81	
	"11SD8"		161+00.00	169+45.00	845.00			8	8	6	6			1,690.00			160.55				0.38	23.47	
	"S32"	WB	36+79.85	46+01.98	922.13	2	12	5	5	10	10	2,459.01	1,536.88		204.92	169.06	233.61	146.00	155.74	175.20	1.17	25.61	
	"5VW1"		46+01.98	72+49.00	2,647.02	2	12	5	5	10	10	7,058.72	4,411.70		588.23	485.29	670.58	419.11	447.05	502.93	3.35	73.53	11.85
	"5VW1"		75+35.00	77+32.00	197.00			3	10	8	8			317.39			30.15				0.09	5.47	0.04
	"5VW1"		77+32.00	84+85.00	753.00			10	10	8	8			1,506.00			143.07				0.44	20.92	5.60
	"5VW1"		84+85.00	89+11.91	426.91			10	10	0	0			474.34			45.06				0.14	11.86	
	"5VW1"		89+11.91	102+54.00	1,342.09			10	10	8	8			2,684.18			255.00				0.78	37.28	11.63
	"5VW1"		102+54.00	120+00.00	1,746.00			10	10	8	8			3,492.00			331.74				1.02	48.50	17.46
	"5VW1"		120+00.00	121+82.13	182.13			10	4	8	8			303.55			28.84				0.09	5.06	1.82
	"W"		121+82.13	123+00.00	117.87			10	10	4	4			183.35			17.42				0.05	3.27	1.18
	"W"		123+00.00	126+44.00	344.00			0	0	8	8			305.78			29.05				0.09	9.56	3.44
	"W"		126+44.00	129+15.00	271.00			0	0	8	8			240.89			22.88				0.07	7.53	2.71
	"W"		129+15.00	132+53.00	338.00			4	4	8	8			450.67			42.81				0.13	9.39	2.97
	"2E1" - "11SD8"		143+48.00	146+91.28	343.28			2	8	0	0			190.71			18.12				0.06		
	"11SD8"		146+91.28	152+35.00	543.72			8	8	0	0			483.31			45.91				0.14		
	"11SD8"		154+00.00	157+07.00	307.00			4	6	8	8			443.44			42.13				0.13	8.53	
	"11SD8"		157+07.00	164+40.00	733.00			6	8	6	6			1,058.78			100.58				0.31	20.36	
	"11SD8"		164+40.00	166+95.75	255.75			8	8	0	0			227.56			21.62				0.07	7.11	
	"11SD8"		166+95.75	169+45.00	249.00	1	12	8	8	8	2		359.67			39.56		34.17		41.00	0.10	6.92	
													SUBTOTAL	36,316.98	1,692.13	693.91	5,379.14	599.28	1,286.02	719.14	18.4	637.79	112.88
													TOTAL Q-1	36,316.98	2,386.04		5,978.41		2,005.16		18.4	637.79	112.88

(N) - NOT A SEPARATE PAY ITEM, FOR INFORMATION ONLY

SUMMARY OF QUANTITIES
Q-1

STATE OF CALIFORNIA - DEPARTMENT OF TRANSPORTATION
Caltrans® PROJECT DEVELOPMENT

FUNCTIONAL SUPERVISOR: KAZIM MAMDANI
CALCULATED-DESIGNED BY: ARY JAFF
CHECKED BY: SOLOMON TADESSE
REVISED BY
DATE REVISED

LAST REVISION 06-21-16
DATE PLOTTED => 04-OCT-2016
TIME PLOTTED => 11:30

Dist	COUNTY	ROUTE	POST MILES TOTAL PROJECT	SHEET No.	TOTAL SHEETS
11	SD	8	T0.5/R0.7	88	162

REGISTERED CIVIL ENGINEER 06-15-16 DATE

08-22-16
PLANS APPROVAL DATE

REGISTERED PROFESSIONAL ENGINEER SOLOMON TADESSE No. C62773 Exp. 06-30-18 CIVIL STATE OF CALIFORNIA

THE STATE OF CALIFORNIA OR ITS OFFICERS OR AGENTS SHALL NOT BE RESPONSIBLE FOR THE ACCURACY OR COMPLETENESS OF SCANNED COPIES OF THIS PLAN SHEET.

ROADWAY QUANTITIES

ROUTE	LINE DESIGNATION	DIRECTION	STATION BEGIN	STATION END	LENGTH (N)	TRAVELWAY LANE WIDTH BEGIN	TRAVELWAY LANE WIDTH END	SHOULDER WIDTH (N) INSIDE BEGIN	SHOULDER WIDTH (N) INSIDE END	SHOULDER WIDTH (N) OUTSIDE BEGIN	SHOULDER WIDTH (N) OUTSIDE END	REMOVE TRAVELWAY AC (N) 0.25'	REMOVE SHOULDER AC (N) 0.25'	COLD PLANE AC PAVEMENT TRAVEL WAY 0.15'	COLD PLANE AC PAVEMENT Shldr 0.15'	ROADWAY EXCAVATION 0.25'	RUBBERIZED HOTMIX ASPHALT (GAP-GRADED) TRAVEL WAY & SHOULDERS 0.15'	RUBBERIZED HOTMIX ASPHALT (GAP-GRADED) TRAVEL WAY & SHOULDERS 0.15'	HOT MIX ASPHALT (TYPE A) TRAVEL WAY & SHOULDERS 0.10'	HOT MIX ASPHALT (TYPE A) TRAVEL WAY & SHOULDERS 0.10'	TACK COAT	IMPORTED BORROW	12" RUMBLE STRIP (ASPHALT Conc PAVEMENT) OUTSIDE
												(SQYD)	(SQYD)	(SQYD)	(SQYD)	(CY)	(TON)	(TON)	(TON)	(TON)	(TON)	(CY)	(STA)
8	"M1AAB1"	EB	77+61.50	79+90.00	241.44	36	44			2	2	1,015.56	50.78			88.86	96.48	4.82	64.32	3.22	0.31	6.35	
	"M1AB1"	EB	79+90.00	82+67.00	264.06	36	36			2	2	1,108.00	61.56			97.46	105.26	5.85	70.17	3.90	0.34	7.69	
	"M1AB1"	EB	82+67.00	90+32.67	765.67	12	36	2	2	2	8	2,041.79	595.52			219.78	193.97	56.57	129.31	37.72	0.77	21.27	
	"SD8S1"	EB	119+09.51	125+36.00	626.49					8	8				556.88			52.90			0.16	17.40	
	"SD8S1"	EB	125+36.00	128+50.00	314.00					8	8				279.11			26.52			0.08	8.72	
	"SD8S1"	EB	128+50.00	130+50.00	200.00					6	8				155.56			14.78			0.05	-	
	"SD8S1"	EB	130+50.00	132+50.00	200.00					8	8				177.78			16.89			0.05	5.56	
	"SD8S1"	EB	132+50.00	133+33.00	83.00					0	0				-						-	-	
	"SD8S1"	EB	133+33.00	137+53.00	420.00					8	10				420.00			39.90			0.12	13.22	
	"S2"	WB	49+70.00	52+61.00	79.00	13	13	6	6	2	2	420.73	258.67			56.58	39.93	24.57	26.62	16.38	0.20	2.19	
	"S2"	WB	52+61.00	57+50.00	489.00	13	13	6	6	2	2	706.33	434.67			95.08	67.10	41.29	44.73	27.53	0.33	13.58	
	"S2"	WB	57+50.00	59+73.00	223.00	13	13	6	10	2	2			322.11	247.78		30.60	23.54			0.17	6.19	
	"N3"	NB	134+92.00	142+16.00	724.00	13	13	0	0	8	8			1,045.78	643.56		99.35	61.14			0.49	20.11	
	"N3"	NB	142+16.00	142+83.00	67.00	13	13	0	0	8	8			96.78	59.56		9.19	5.66			0.05	1.86	
	"S4" TO "S4_A"	EB	130+77.00	131+73.00	427.89					8	8				380.35			36.13			0.11	-	
	"S4_A"	EB	131+73.00	133+36.00	163.00			6	4	8	8				235.44			22.37			0.07	-	
	"S4_A"	EB	140+08.00	143+60.00	352.00					8	8				312.89			29.72			0.09	9.78	
	"S4_A"	EB	143+60.00	147+03.00	343.00					8	8				304.89			28.96			0.09	9.53	
	"S4_A"	EB	147+03.00	147+66.00	63.00					8	12				70.00			6.65			0.01		
	"S4_A"	EB	147+66.00	149+00.00	134.00	12	12			5	5			178.67	74.44		16.97	7.07			0.07	3.72	
	"S4_A"	EB	150+50.00	151+20.00	83.00	12	12			5	5			93.33	38.89		8.87	3.69			0.04	1.94	
	"S4_A"	EB	151+20.00	155+62.00	441.00					8	8				392.89			37.32			0.11	12.28	
	"M6"	EB	154+53.00	161+15.00	662.00	12	12	4	4	8	8			882.67	882.67		83.85	83.85			0.51	-	
	"M6"	EB	161+15.00	162+10.87	95.87	12	12	0	0	8	8			127.83	85.22		12.14	8.10			0.06	-	
	"M3"	EB	144+40.00	150+34.00	594.00	12	12	0	0	8	8			792.00	528.00		75.24	50.16			0.39	16.50	
	"M3"	EB	150+34.00	150+98.03	64.03	12	12	0	0	8	8			85.37	56.92		8.11	5.41			0.04	1.78	
	"5VS3"	WB	123+00.00	126+44.00	344.00			5	5	0	0				191.11			18.16			0.06	-	
	"5VS3"	WB	126+44.00	133+00.00	656.00			5	5	8	8				947.56			90.02			0.28	-	
	"5VS3"	WB	135+75.00	137+50.00	957.00			2	3	8	8				204.17			19.40			0.06	-	
	"5VS3"	WB	137+50.00	149+93.00	461.00			3	3	8	8				1,519.22			144.33			0.44	-	
	"M5"	EB	63+43.32	64+44.38	101.06	24	24	2	2	2	2			269.49	44.92		25.60	4.27			0.09	2.81	
	"M5"	EB	64+44.38	73+83.52	939.14	24	24	4	4	5	5			2,504.37	939.14		237.92	89.22			1.00	26.09	
	"M1"	WB	155+09.00	166+96.00	1,187.00	12	12			8	8			1,582.67	1,055.11		150.35	100.24			0.77	32.97	
	"N5"	WB	135+50.00	143+69.00	819.00	12	24							1,638.00			155.61				0.48	45.50	
	"E-4"	EB	260+18.00	269+17.00	899.00					10	10				998.89			94.89			0.29	49.94	
												SUBTOTAL		9,619.1	11,802.92	557.77	1,416.55	1,254.39	335.16	88.74	8.20	342.89	
												TOTAL Q-2		21,421.98		557.77	2,670.94		423.9		8.20	342.89	
												TOTAL Q-1		36,316.98		2,386.04	5,978.41		2,005.16		18.4	637.79	112.88
												GRAND TOTAL		57,739 *		2,944 *	8,650 *		2,429 *		27 *	981	112.9

* SEE OTHER Q SHEETS FOR ADDITIONAL QUANTITIES.

SUMMARY OF QUANTITIES
Q-2

REVISED BY	DATE REVISED

ARY JAFF	SOLOMON TADESSE
CALCULATED-DESIGNED BY	CHECKED BY
FUNCTIONAL SUPERVISOR	KAZIM MAMDANI

STATE OF CALIFORNIA - DEPARTMENT OF TRANSPORTATION
Caltrans® PROJECT DEVELOPMENT

LAST REVISION 06-21-16 | DATE PLOTTED => 04-OCT-2016 | TIME PLOTTED => 11:30

Dist	COUNTY	ROUTE	POST MILES TOTAL PROJECT	SHEET No.	TOTAL SHEETS
11	SD	8	T0.5/R0.7	89	162

REGISTERED CIVIL ENGINEER 06-15-16 DATE

08-22-16
PLANS APPROVAL DATE

REGISTERED PROFESSIONAL ENGINEER SOLOMON TADESSE No. C62773 Exp. 06-30-18 CIVIL STATE OF CALIFORNIA

THE STATE OF CALIFORNIA OR ITS OFFICERS OR AGENTS SHALL NOT BE RESPONSIBLE FOR THE ACCURACY OR COMPLETENESS OF SCANNED COPIES OF THIS PLAN SHEET.

GUARD RAILING

MGS No.	LINE DESIGNATION	DIRECTION	STATION Exist GUARD RAILING BEGIN	STATION Exist GUARD RAILING END	STATION NEW MGS BEGIN	STATION NEW MGS END	SHOULDER LOCATION	LAYOUT TYPE (N) TYPE	REMOVE GUARDRAIL (LF)	TREATED WOOD WASTE (LB)	MIDWEST GUARDRAIL SYSTEM (LF)	MIDWEST GUARDRAIL SYSTEM (7' WOOD POST) (LF)	ALTERNATIVE FLARED TERMINAL SYSTEM (EA)	ALTERNATIVE IN-LINE TERMINAL SYSTEM (EA)	Trans RAILING (TYPE WB-31) (EA)	END ANCHOR ASSEMBLY (TYPE SFT) (EA)	GUARD RAILING DELINEATOR (EA)	END CAP (N) (TYPE A) (EA)	MINOR Conc (MINOR STRUCTURE) (CY)	ANCHOR BLOCK (N) (EA)	COMMENTS
	"5VE1"	EB	80+45.00	81+83.00			OUT		138	1,543											EB 8
1	"5VE1"	EB	100+93.00	101+87.00	100+12.00	101+87.00	IN	12B	94	1,051	175.00		1		1		3		0.7	TYPE 1	EB 8
2	"5VE1"	EB	106+25.00	110+23.00	106+28.00	111+15.50	OUT	12DD	398	4,450	481.25					1	6	1	0.8	TYPE 4	EB 8
3	"5VE1"	EB	128+50.00	129+23.00	128+50.00	128+87.50	OUT	16B	73	816	29.25		1			1	2				EB 8, OH SIGN PROTECTION
4	"5VE1"	EB	148+95.00	149+77.00	149+33.25	149+77.00	IN	16B	82	917	43.75		1			1	2				EB 8
5	"5VE1"	EB	157+86.00	161+17.00	156+54.50	161+17.00	OUT	12A	331	3,701	462.50			1	1		6		0.7	TYPE 1A	EB 8 UNDER SB 5 CONNECTOR TO CAMINO DEL RIO W OC
6	"E4"	EB	263+94.00	268+94.00	263+69.00	268+94.00	OUT	12A	500	5,590		525.00		1	1		6		0.7	TYPE 1	CAMINO DEL RIO W BEFORE MERGE TO EB ROUTE 8
7	"5VW1"	WB	99+84.00	100+63.00	99+84.00	100+34.00	OUT	16A	79	883	50.00			1		1	2				WB 8 BEFORE SPORTS ARENA OFF-RAMP
8	"5VW1"	WB	75+35.00	75+99.00	75+35.00	79+22.50	OUT	12A	64	716		387.50		1	1		5		0.7	TYPE 1	WB 8 @ SPORTS ARENA Blvd OC, CONNECTED TO BRIDGE
9	"5VW1"	WB	49+42.00	50+20.00	49+42.00	49+92.00	OUT	16B	78	872	50.00		1			1	2				WB 8 BEFORE NIMITZ BLVD, OH SIGN PROTECTION
10	"M5"	EB	66+10.00	72+85.00	66+10.00	72+47.50	OUT	16A	675	7,547		637.50		1		1	7				SB MIDWAY DR TO EB 8 LOOP ON-RAMP
	"M5"	EB	72+38.00	73+91.00			OUT		153	1,711											SB MIDWAY DR TO EB 8 LOOP ON-RAMP
11	"SD8S1"	EB	120+01.00	120+75.00	119+75.00	120+75.00	OUT	16B	74	827	100.00		1			1	2				EB 8 TO SB 5 CONNECTOR, OH SIGN PROTECTION
12	"N5"		135+64.00	139+08.00	136+10.00	141+10.00	OUT	12DD	344	3,846	500.00					1	7	1	6.4	TYPE 2	SB 5 OFF-RAMP TO CAMINO DEL RIO W
	"SD8S1"		135+35.00	136+48.00			IN		113	1,263		-									EB 8 TO SB 5 CONNECTOR, BRIDGE COLUMN PROTECTION
	"5XT1"		1087+53.00	1094+40.00			OUT		687.5	7,686											CAMINO DEL RIO W TO NB ROUTE 5 LOOP ON-RAMP
13	"M3"	EB	29+36.00	149+80.00	29+42.50	149+17.50	OUT		544	6,082	550.00					1	7				SB MORENA BLVD TO EB 8 LOOP ON-RAMP
14	"11SD8"	EB	159+14.00	169+26.50	158+51.50	169+26.50	OUT	16B	1012.5	11,320		1,075.00	1			1	12				EB 8 EAST OF MORENA BLVD TO EAST END OF PROJECT
15	"M2"	WB	87+35.00	88+14.00	87+35.00	87+72.50	OUT	16B	79	883	37.50			1		1	2				WB 8 OFF-RAMP TO SPORTS ARENA Blvd
16	"5VS3"	WB	147+85.00	148+60.00	147+85.00	148+22.50	IN	16B	75	839	37.50			1		1	2				NB 5 TO WB 8 CONNECTOR, PROTECTS OH SIGN
17	"5VS3"	WB	136+12.00	136+76.00	136+36.00	136+86.00	IN	12A	64	716	50.00		1		1		2		5.7	TYPE 3	NB 5 TO WB 8 CONNECTOR, CONNECTED TO BRIDGE
	"SD8S1"	EB	128+95.00	129+59.00			OUT		64	716											EB 8 TO SB ROUTE 5 CONNECTOR
	"SD8S1"	EB	133+96.00	135+52.84			OUT		157	1,753											EB 8 TO SB 5 CONNECTOR, BRIDGE COLUMN PROTECTION
18	"N3"		135+22.00	141+02.00	135+22.00	142+09.50	IN	12DD	580	6,484		687.50				1	8	1			CAMINO DEL RIO W TO NB ROUTE 5 LOOP ON-RAMP
							TOTAL		6,459	72,212 *	2,592	3,313	7	7	5	13	83		15.7		

(N) = NOT A SEPARATE PAY ITEM, FOR INFORMATION ONLY
* SEE "SQ" SHEETS FOR ADDITIONAL QUANTITIES.

LEGEND

IN - INSIDE SHOULDER
OUT - OUTSIDE SHOULDER

SUMMARY OF QUANTITIES
Q-3

STATE OF CALIFORNIA - DEPARTMENT OF TRANSPORTATION
Caltrans PROJECT DEVELOPMENT

FUNCTIONAL SUPERVISOR: KAZIM MAMDANI
CALCULATED-DESIGNED BY: JIM ALSHIEK
CHECKED BY: SOLOMON TADESSE
REVISED BY
DATE REVISED

LAST REVISION 06-21-16 | DATE PLOTTED => 04-OCT-2016 | TIME PLOTTED => 11:30

Dist	COUNTY	ROUTE	POST MILES TOTAL PROJECT	SHEET No.	TOTAL SHEETS
11	SD	8	T0.5/R0.7	90	162

REGISTERED CIVIL ENGINEER 06-15-16 DATE

08-22-16
PLANS APPROVAL DATE

REGISTERED PROFESSIONAL ENGINEER SOLOMON TADESSE No. C62773 Exp. 06-30-18 CIVIL STATE OF CALIFORNIA

THE STATE OF CALIFORNIA OR ITS OFFICERS OR AGENTS SHALL NOT BE RESPONSIBLE FOR THE ACCURACY OR COMPLETENESS OF SCANNED COPIES OF THIS PLAN SHEET.

GRIND EXISTING CONCRETE PAVEMENT

ROUTE	DIRECTION	LINE DESIGNATION	BEGIN STATION	END STATION	LENGTH (LF) (N)	BEGIN WIDTH (LF)	END WIDTH (LF)	AREA (SQYD)
8	EB	"5VE1"	105+42.00	147+00.00	4,158.0	48	48	22,176.0
	EB	"5VE1"	147+00.00	148+15.00	115.0	48	60	690.0
	EB	"5VE1"	148+15.00	161+80.00	1,365.0	36	24	4,550.0
	EB	"2E1" TO "11SD8"	143+50.00	147+35.40	385.4	46	42	1,884.2
	EB	"11SD8"	147+35.40	152+40.00	504.6	40	36	2,130.5
		"11SD8"	153+90.00	158+91.00	501.0	50	60	3,061.7
	EB	"11SD8"	158+91.00	169+45.00	1,054.0	62	62	7,260.9
	EB	"5VW1"	75+35.00	89+11.91	1,376.9	24	36	4,589.7
	WB	"5VW1"	89+11.91	99+00.00	988.1	60	60	6,587.3
	WB	"5VW1"	99+00.00	102+50.00	350.0	60	48	2,100.0
	WB	"5VW1"	102+50.00	121+82.13	1,932.1	48	24	7,728.5
	WB	"W"	121+82.13	132+53.00	1,070.9	24	24	2,855.7
	WB	"2E1" TO "11SD8"	143+48.00	146+91.28	343.3	41	62.5	1,973.9
	WB	"11SD8"	146+89.60	152+35.00	545.4	41	41	2,484.6
	WB	"11SD8"	154+00.00	155+31.50	131.5	72	64	993.6
	WB	"11SD8"	155+31.50	169+47.30	1,415.8	64	60	9,753.3
	WB	"SD8S1"	133+33.00	137+53.00	420.0	24	24	1,120.0
	EB	"SD8S1"	125+36.00	133+33.00	797.0	12	24	1,594.0
	EB	"SD8S1"	119+09.51	125+36.00	626.5	24	24	1,670.6
	EB	"2E1" TO "11SD8"	143+50.00	152+40.00	890.0	24	24	2,373.3
	EB	"S4_A"	147+66.00	155+62.00	796.0	12	12	1,061.3
	EB	"S4_A"	140+08.00	147+66.00	758.0	12	12	1,010.7
	EB	"S4_A"	130+36.34	133+36.00	299.7	12	12	399.5
	EB	"S4"	130+77.00	133+68.23	291.2	12	12	388.3
	EB	"5VS3"	135+75.00	149+93.00	1,418.0	24	24	3,781.3
	WB	"5VS3"	123+00.00	133+00.00	1,000.0	24	24	2,666.7
	WB							
							TOTAL	96,886

CURB AND GUTTER REMOVAL / HMA SHOULDER QUANTITIES

LINE	STATION FROM	STATION TO	SHOULDER SIDE	ROADWAY Exc CY	ROADWAY Exc CY	MINOR CONCRETE (RAPID SET) CY	RHMA (GAP-GRADED) 0.15′ TON	HMA (TYPE A) 0.20′ TON	CLASS 2 AGGREGATE BASE 0.45′ CY	TACK COAT TON	ROADWAY Exc (TYPE Z-2) (AERIALLY DEPOSITED LEAD) CY	REMOVE CONCRETE CURB CY	REMOVE CONCRETE 0.33′ PAVING CY	MINOR CONCRETE (MISCELLANEOUS CONSTRUCTION) 0.33′ CY	Place HMA (Misc AREA) SQYD	MINOR HMA TON	REMARK
"5VE1"	151+55.00	161+80.00	INSIDE	63.7	6.7		37.9	50.6	48.3	0.1		63.3			170.8	37.6	CASE 1, SEE SHEET C-11 - MAIN LINE EB
"E-4"	260+45.00	266+10.00	OUTSIDE	70.3			39.7	53.1	53.3	0.1		69.7					BEYOND GORE PAVING Loc #3 - MAIN LINE EB
"W"	126+40.00	128+20.00	INSIDE	14.1			6.3	11.2	10.7	0.0		14.0					BEYOND GORE PAVING Loc #2, - MAIN LINE WB
"W"	128+20.00	129+27.00	INSIDE	6.7			4.0	5.3	5.0	0.0		6.6	2.4	2.4			BEYOND GORE PAVING Loc #2, - MAIN LINE WB
"W"	129+27.00	133+04.00	INSIDE	23.4			13.9	18.6	17.8	0.0	20.7	23.3					CASE 3, SEE SHEET C-11 - MAIN LINE WB
"SD8S1"	121+70.00	125+35.00	INSIDE	26.4			15.4	20.5	20.0	0.0		26.2					BEYOND GORE PAVING Loc #1, - EB ROUTE 8 TO SB ROUTE 5
"SD8S1"	125+35.00	128+94.00	INSIDE	22.3	2.3		13.3	17.7	16.9	0.0		22.2			59.8	13.2	CASE1, SEE SHEET C-11 - EB ROUTE 8 TO SB ROUTE 5
"SD8S1"	130+68.00	137+53.00	INSIDE	42.6	4.5		25.3	33.8	32.3	0.1		42.3			88.7	19.5	CASE1, SEE SHEET C-11 - EB ROUTE 8 TO SB ROUTE 5
"5VS3"	137+00.00	145+40.00	INSIDE	52.2	5.5		31.1	41.4	39.6	0.1		51.8			140.0	30.8	CASE 1, SEE SHEET C-11- NB ROUTE 5 TO WB ROUTE 8 CONNECTOR
"S4_A"	140+22.00	143+60.00	INSIDE	21.0	2.2		12.5	16.7	15.9	0.0		20.9			56.3	12.4	CASE 1, SEE SHEET C-11- NB ROUTE 5 TO EB ROUTE 8 CONNECTOR
"S4_A"	150+50.00	155+60.00	INSIDE	31.7			17.0	22.7	24.1	0.0		31.5					BEYOND GORE PAVING Loc #3 - NB ROUTE 5 TO EB ROUTE 8 CONNECTOR
"M1"	155+09.00	164+27.00	INSIDE	60.4	3.5		35.9	47.9	45.8	0.1		59.9	9.7	9.7	88.5	19.5	CASE1, CASE 2, SEE SHEET C-11 - WB 8 OFF-RAMP TO MORENA Blvd
"N5"	136+06.00	142+45.00	INSIDE	39.7	4.2		23.6	31.5	30.1	0.1		39.4			106.5	23.4	CASE 1, SEE SHEET C-11 - SB 5 TO CAMINO DEL RIO W
"N5"	141+10.00	143+69.00	OUTSIDE	16.1	1.7		9.6	12.8	12.2	0.0		16.0					CASE 1, SEE SHEET C-11 - SB 5 TO CAMINO DEL RIO W
"N5"	135+64.00	136+08.00	OUTSIDE	1.0		3.2						1.6					SEE SHEET C-15 - SB 5 TO CAMINO DEL RIO W
			SUB-TOTAL	491	30							489	12				
			TOTAL	521 *		3.2 *	286*	384*	372	0.6*	20.7*	501 *		12.1 *	711*	156*	

* SEE OTHER Q SHEETS FOR ADDITIONAL QUANTITIES.
(N) NOT A SEPARATE PAY ITEM, FOR INFORMATION ONLY.

SUMMARY OF QUANTITIES
Q-4

FUNCTIONAL SUPERVISOR: KAZIM MAMDANI
CALCULATED-DESIGNED BY: ARY JAFF
CHECKED BY: SOLOMON TADESSE
REVISED BY / DATE REVISED

STATE OF CALIFORNIA - DEPARTMENT OF TRANSPORTATION
Caltrans PROJECT DEVELOPMENT

LAST REVISION 06-21-16 | DATE PLOTTED => 04-OCT-2016 | TIME PLOTTED => 11:30

Dist	COUNTY	ROUTE	POST MILES TOTAL PROJECT	SHEET No.	TOTAL SHEETS
11	SD	8	T0.5/R0.7	91	162

REGISTERED CIVIL ENGINEER 06-15-16 DATE

08-22-16
PLANS APPROVAL DATE

REGISTERED PROFESSIONAL ENGINEER SOLOMON TADESSE No. C62773 Exp. 06-30-18 CIVIL STATE OF CALIFORNIA

THE STATE OF CALIFORNIA OR ITS OFFICERS OR AGENTS SHALL NOT BE RESPONSIBLE FOR THE ACCURACY OR COMPLETENESS OF SCANNED COPIES OF THIS PLAN SHEET.

HOT MIX ASPHALT DIKE

LINE DESIGNATION	DIRECTION	SIDE OF SHOULDER	DIKE REMOVAL STATION		NEW HMA DIKE STATION		REMOVE AC DIKE		PLACE HMA DIKE				DIKE AREA (N)	MINOR HOT MIX ASPHALT		TACK COAT	ASPHALTIC EMULSION (FOG SEAL COAT)	REMARK
							(TYPE A)	(TYPE E)	(TYPE E)	(TYPE F)	(TYPE C)	(TYPE E Mod)		DIKE	DIKE PAD			
			FROM	TO	FROM	TO	LF	LF	LF	LF	LF		SQYD	TON	TON	TON	TON	
"S33"	EB	RIGHT	33+42.00	35+90.00			248.0		248.0				36.6	6.4	3.9	0.01	0.02	EB ROUTE 8
"S33"	EB	RIGHT	35+91.00	46+68.20			1,077.2		1,077.2				159.2	28.0	17.1	0.05	0.07	EB ROUTE 8
"5VE1"	EB	RIGHT	89+13.34	102+00.00			1,286.7		1,286.7				190.1	33.5	20.4	0.06	0.08	EB ROUTE 8
"E-4"	EB	LEFT			260+45.00	266+10.00						565.0	83.5	14.0	8.5	0.02	0.04	CAMINO DEL RIO W TO EB ROUTE 8
"11SD8"	EB	RIGHT	153+90.00	158+21.00	153+70.00	158+88.00	431.0		518.0				76.5	13.5	8.2	0.02	0.03	EB ROUTE 8
"S32"-"5VW1"	WB	LEFT	44+60.00	50+10.00	44+60.00	50+10.00		550	550.0				113.1	14.3	8.7	0.03	0.05	WB ROUTE 8
"5VW1"	WB	RIGHT	69+84.00	71+76.00	69+84.00	71+76.00	192.0		192.0				28.4	5.0	3.0	0.01	0.01	WB ROUTE 8
"5VW1"	WB	RIGHT	75+35.00	83+50.00	75+35.00	83+50.00	815.0		340.0	412.5	62.5		87.9	14.8	9.0	0.03	0.04	WB ROUTE 8
"W"	WB	LEFT			126+40.00	128+20.00						180.0	26.6	4.4	2.7	0.01	0.01	
"W"	WB	LEFT			128+20.00	133+04.00			484.0				71.5	12.6	7.7	0.02	0.03	WB ROUTE 8
"11SD8"	WB	RIGHT	157+32.00	159+61.00	157+32.00	159+61.00	229.0		229.0				33.8	6.0	3.6	0.01	0.01	WB ROUTE 8
"M5"	EB	RIGHT	64+50.00	72+04.00	64+50.00	72+04.00	153.0	788	516.5	175	62.5		96.3	16.2	9.9	0.03	0.04	WB ROUTE 8
"M1AAB1"	EB	RIGHT	78+12.00	80+00.00	78+12.00	80+00.00		188	163.0		25.0		33.5	4.4	2.7	0.01	0.01	MIDWAY Dr TO EB ROUTE 8
"M1AB1"	EB	LEFT	80+03.00	82+92.00	80+03.00	82+92.00		289	289.0				42.7	7.5	4.6	0.01	0.02	MIDWAY Dr TO EB ROUTE 8
"SD8S1"	EB	RIGHT	122+60.00	132+63.00	122+60.00	128+16.00	1,003.0		297.0		50.0		55.0	9.7	5.9	0.02	0.02	EB ROUTE 8 CONNECTOR TO SB ROUTE 5
"SD8S1"	EB	RIGHT			128+16.00	132+63.00			447.0				37.7	6.6	4.0	0.01	0.02	EB ROUTE 8 CONNECTOR TO SB ROUTE 5
"SD8S1"	EB	LEFT			121+70.00	122+60.00						90.0	13.3	2.2	1.4	0.00	0.01	
"SD8S1"	EB	LEFT			122+60.00	134+95.00			1235.0				182.5	32.1	19.6	0.05	0.08	EB ROUTE 8 CONNECTOR TO SB ROUTE 5
"SD8S1"	EB	LEFT			136+48.00	137+53.00			105.0				15.5	2.7	1.7	0.01	0.01	EB ROUTE 8 CONNECTOR TO SB ROUTE 5
"S2"	WB	RIGHT	51+10.00	59+70.00	52+09.00	59+70.00	860.0		711.0		50.0		112.5	19.8	12.1	0.03	0.05	WB ROUTE 8/SB MORENA TO SB 5 LOOP ON-RAMP
"5VE1"	EB	RIGHT	151+35.00	161+80.00	155+92.00	161+17.00	1,045.0		495.0	487.5	62.5		116.4	19.8	12.1	0.03	0.05	EB ROUTE 8
"5VE1"	EB	LEFT			151+55.00	161+80.00			1,025.0				151.5	26.7	16.3	0.04	0.07	EB ROUTE 8
"S4_A"	EB	RIGHT	140+20.00	146+50.00	140+20.00	146+50.00	630.0		630.0				93.1	16.4	10.0	0.03	0.04	CAMINO DEL RIO W TO EB ROUTE 8
"E-4"	EB	RIGHT	260+30.00	263+91.00	260+30.00	263+38.00		361	308.0				63.3	8.0	4.9	0.02	0.03	NB ROUTE 5 CONNECTOR TO EB ROUTE 8
"S4_A"	EB	LEFT			150+50.00	155+60.00						510.0	75.4	12.6	7.7	0.02	0.03	NB ROUTE 5 CONNECTOR TO EB ROUTE 8
"S4_A"	EB	RIGHT	153+32.00	169+30.00	153+32.00	169+30.00	1,598.0		560.5	975	62.5		162.4	27.9	17.0	0.05	0.07	SB MORENA TO EB ROUTE 8 LOOP ON-RAMP
"M3"	EB	RIGHT	145+70.00	150+98.00	145+70.00	150+98.00	528.0		528.0				78.0	13.7	8.4	0.02	0.03	CAMINO DEL RIO W TO NB ROUTE 5 LOOP ON-RAMP
"N3"		LEFT	134+95.00	142+40.00	134+95.00	142+40.00	745.0		745.0				110.1	19.4	11.8	0.03	0.05	CAMINO DEL RIO W TO NB ROUTE 5 LOOP ON-RAMP
"N5"		LEFT			141+02.00	142+30.00			128.0				18.9	3.3	2.0	0.01	0.01	SB ROUTE 5 TO CAMINO DEL RIO W
"N5"		RIGHT			135+22.00	142+50.00		-	211.0	455	62.5		31.2	12.0	7.3	0.01	0.01	SB ROUTE 5 TO CAMINO DEL RIO W
"M6"		RIGHT	154+53.00	162+10.87	154+53.00	162+10.87	757.9		757.9				112.0	19.7	12.0	0.03	0.05	
						SUB TOTAL	11,599	2,176	14,077	2,505	437.5	1,345.0		435	266	0.74	1.09	
						TOTAL	13,775		14,077	2,505	437.5	1,345.0		701 *		0.73*	1.09	

* SEE OTHER Q SHEETS FOR ADDITIONAL QUANTITIES.

(N) NOT A SEPARATE PAY ITEM, FOR INFORMATION ONLY.

SUMMARY OF QUANTITIES

Q-5

STATE OF CALIFORNIA - DEPARTMENT OF TRANSPORTATION
Caltrans PROJECT DEVELOPMENT

FUNCTIONAL SUPERVISOR: KAZIM MAMDANI
CALCULATED-DESIGNED BY: ARY JAFF
CHECKED BY: SOLOMON TADESSE
REVISED BY
DATE REVISED

LAST REVISION 06-21-16
DATE PLOTTED => 04-OCT-2016
TIME PLOTTED => 11:30

Dist	COUNTY	ROUTE	POST MILES TOTAL PROJECT	SHEET No.	TOTAL SHEETS
11	SD	8	T0.5/R0.7	92	162

REGISTERED CIVIL ENGINEER 06-15-16 DATE

08-22-16
PLANS APPROVAL DATE

REGISTERED PROFESSIONAL ENGINEER SOLOMON TADESSE No. C62773 Exp. 06-30-18 CIVIL STATE OF CALIFORNIA

THE STATE OF CALIFORNIA OR ITS OFFICERS OR AGENTS SHALL NOT BE RESPONSIBLE FOR THE ACCURACY OR COMPLETENESS OF SCANNED COPIES OF THIS PLAN SHEET.

BEYOND GORE PAVING

LOCATION	SHEET	LINE	FROM STA TO STA	LENGTH (LF)	DIRECTION	AVERAGE WIDTH (LF)	ROADWAY EXCAVATION (TYPE Z-2) (AERIALLY DEPOSITED LEAD) (CY)	AREA (N) (SQFT)	REMOVE AC PAVEMENT 0.15′ (CY)	MINOR CONCRETE (MISCELLANEOUS CONSTRUCTION) (CY)	MINOR CONCRETE (EXPOSED AGGREGATE CONCRETE) (SQFT)
1	C-5	"SD8S1"	121+70 TO 122+60	90	EASTBOUND	15.0	16.3	1,260	7.0	15.4	
2	C-5	"W"	126+40 TO 128+20	180	WESTBOUND	13.0	27.2	2,250	11.7	27.5	
3	C-6	"E-4"	260+45 TO 266+10	565	EASTBOUND	8.5	62.2	4,802	26.7		4,802
4	C-6	"S4_A"	150+50 TO 155+60	510	EASTBOUND	9.0	59.5	4,590	24.4		4,590
						TOTAL	165.2 *		69.8 *	42.9 *	9,392

CONCRETE BARRIER

LOCATION #	LINE	STATION LIMIT	SHEET	SHOULDER SIDE	TYPE 60 (LF)	ALTERNATIVE CRASH CUSHION SYSTEM TYPE A (EA)	ALTERNATIVE CRASH CUSHION SYSTEM TYPE B (EA)	ROADWAY Exc (TYPE Z-2) (AERIALLY DEPOSITED LEAD) (CY)	PLACE HMA (Misc AREA) (SQYD)	MINOR HMA (TON)	REMARK	LOCATION DESCRIPTION
1	"SD8S1"	30.25′ R+ 128+16.00 TO 29.86′ R+ 130+00.00	C-5	OUTSIDE	184	1 **			23.9	15.9		EB ROUTE 8 TO SB ROUTE 5 CONNECTOR
2	"S2"	18′ R+ 49+70 TO 24′ R+ 51+72	C-5	OUTSIDE	202		1		23.9	15.9	WITH SCUPPER	EB ROUTE 8 TO SB ROUTE 5 CONNECTOR
3	"N3"/"5XT1"	18.90′ R+ "N3" 143+34.71 TO 79.61′ R+ "5XT1" 1094+76.90	C-5	OUTSIDE	687	1 **		1.3	23.9	15.9	WITH SCUPPER	CAMINO DEL RIO W TO NB ROUTE 5
4	"SD8S1"	6.17′ L+ 134+95.00 TO 7.65′ L+ 136+48.00	C-5	INSIDE	153	1 **		1.3	23.9	15.9		EB ROUTE 8 TO SB ROUTE 5 CONNECTOR
5	"M5"	35′ R+ 72+04 TO 31′ R+ 73+90	C-2	OUTSIDE	154		1	1.3	23.9	15.9		SB SPORTS ARENA Blvd TO EB ROUTE 8 ON-RAMP
				TOTAL	1,380	3	2	3.9 *	119.5 *	79.5 *		

** SEVERE DUTY CRASH CUSHION

GORE PAVING

ROUTE	GORE AREA LOCATION #	LINE DESIGNATION	DIRECTION	STATION BEGIN	STATION END	LENGTH (N) (LF)	SHOULDER SIDE	COLD PLAN AREA (N) (SQFT)	COLD PLANE AC PAVEMENT GORE 0.15′ (SQYD)	HOT MIX ASPHALT (TYPE A) GORE 0.15′ (TON)	TACK COAT (TON)	COMMENTS
8	1	"SD8S1"	EB	119+09.51	121+68.00	258.49	INSIDE	2,267	251.9	25.2	0.1	EB ROUTE 8 TO SB ROUTE 5 CONNECTOR
8	2	"SD8S1"	EB	132+50.00	133+33.00	83.00	OUTSIDE	722	80.2	8.0	0.0	EB ROUTE 8 TO SB ROUTE 5 CONNECTOR
8	3	"11SD8"	EB	149+30.00	152+30.00	300.00	INSIDE	2,288	254.2	25.4	0.1	EB ROUTE 8 WEST OF MORENA Blvd
8	4	"M1AB1"	EB	82+95.00	90+32.67	737.67	INSIDE	8,350	927.8	92.8	0.3	EB MIDWAY Dr TO EB ROUTE 8
8	5	"5VW1"	WB	83+50.00	89+00.00	550.00	OUTSIDE	8,876	986.2	131.5	0.3	WB ROUTE 8 EAST OF MIDWAY Dr
8	6	"M1"	WB	164+25.00	166+25.00	200.00	INSIDE	1,617	179.6	23.9	0.1	WB ROUTE 8 TO NB MORENA Blvd
8	7	"5VW1"	WB	122+90.00	126+50.00	360.00	INSIDE	1,664	184.9	24.6	0.1	WB ROUTE 8 WEST OF ROUTE 5
	8	"N3"		142+20.00	142+85.00	65.00	INSIDE	932	103.6	10.4	0.0	CAMINO DEL RIO W TO NB ROUTE 5
	9	"5VS3"		145+40.00	149+95.00	455.00	OUTSIDE	7,523	835.9	83.6	0.2	NB ROUTE 5 CONNECTOR TO EB/WB ROUTE 8
	10	"S4_A"	EB	155+55.00	157+75.00	220.00	INSIDE	1,140	126.7	12.7	0.0	NB ROUTE 5 CONNECTOR TO EB ROUTE 8
	11	"M5"	EB	73+20.00	73+80.00	60.00	INSIDE	1,233	137.0	13.7	0.0	SB MIDWAY Dr TO EB ROUTE 8 LOOP ON-RAMP
								TOTAL	4,068 *	455 *	1.2 *	

* SEE OTHER Q SHEETS FOR ADDITIONAL QUANTITIES.

(N) NOT A SEPARATE PAY ITEM, FOR INFORMATION ONLY.

SUMMARY OF QUANTITIES
Q-6

REVISED BY | DATE REVISED

ARY JAFF | SOLOMON TADESSE

CALCULATED-DESIGNED BY | CHECKED BY

FUNCTIONAL SUPERVISOR: KAZIM MAMDANI

STATE OF CALIFORNIA - DEPARTMENT OF TRANSPORTATION
Caltrans® PROJECT DEVELOPMENT

LAST REVISION 06-21-16 | DATE PLOTTED => 04-OCT-2016 TIME PLOTTED => 11:30

Dist	COUNTY	ROUTE	POST MILES TOTAL PROJECT	SHEET No.	TOTAL SHEETS
11	SD	8	T0.5/R0.7	93	162

REGISTERED CIVIL ENGINEER 06-15-16 DATE

08-22-16
PLANS APPROVAL DATE

REGISTERED PROFESSIONAL ENGINEER SOLOMON TADESSE No. C62773 Exp. 06-30-18 CIVIL STATE OF CALIFORNIA

THE STATE OF CALIFORNIA OR ITS OFFICERS OR AGENTS SHALL NOT BE RESPONSIBLE FOR THE ACCURACY OR COMPLETENESS OF SCANNED COPIES OF THIS PLAN SHEET.

CURB RAMPS

CURB RAMP LOCATION No.	ROUTE	LOCATION DESCRIPTION (REFERENCE TO LEFT/RIGHT SIDE IS RELATIVE TO DIRECTION OF TRAVEL)	REMOVE CONCRETE (CY)	REMOVE ASPHALT CONCRETE PAVEMENT (CY)	MINOR CONCRETE (RAPID SET) (CY)	PLACE HMA (MISCELLANEOUS AREA) (SQYD)	HOT MIX ASPHALT (TYPE A) (TON)	TACK COAT (TON)	DETECTABLE WARNING SURFACE (SQFT)	ROCK BLANKET (SQFT)	PRE / POST CONSTRUCTION SURVEYS (EA)
1	8	Rte 8 AND EB ON-RAMP FROM SPORTS ARENA Blvd: RIGHT SIDE	2.22	0.24	2.3	1.47	0.49	0.000653	15.00	56	1
2	8	Rte 8 AND EB ON-RAMP FROM SPORTS ARENA Blvd: ISLAND PASSGAEWAY	8.93	0.63	7.06	3.78	1.26	0.004333	36.00		1
3	5	NB OFF-RAMP FROM Rte 5 TO NB MORENA Blvd: LEFT SIDE	1.30	0.10	6.77	0.57	0.19	0.000097	15.00		1
4	5	NB OFF-RAMP FROM Rte 5 TO NB MORENA Blvd: RIGHT SIDE	2.64	0.43	9.23	2.56	0.85	0.0020	15.00		1
5	8	EB ON-RAMP TO Rte 8 FROM SB MORENA Blvd: LEFT SIDE	2.23	4.48	9.89	11.55	7.23	0.000323	18.00		1
6	8	EB ON-RAMP TO Rte 8 FROM SB MORENA Blvd: RIGHT SIDE	2.12	0.36	10.19	3.10	0.72	0.001631	18.00		1
		TOTAL	20 *	6 *	46 *	23 *	11*	0.009 *	117	56	6

AC CURB AND DIKE REMOVAL/ PCC CURB

ROUTE	DIRECTION	SHEET	LINE DESIGNATION	STATION BEGIN	STATION END	LENGTH (N) (LF)	WIDTH (N) BEGIN (LF)	WIDTH (N) END (LF)	REMOVE AC PAVEMENT 0.50′ (CY)	MINOR CONCRETE (RAPID SET) PCC CURB 1.33′ (CY)
8	EB	C-16	"5VE1"	161+17.0	161+79.5	62.5	3.2	1.7	5.7	
8	EB	C-16	"5VE1"	161+45.5	161+79.5	34.0	0.3	2.0		1.5
								TOTAL	5.7 *	1.5 *

* SEE OTHER Q SHEETS FOR ADDITIONAL QUANTITIES.

REMOVE AND REPLACE PEDESTRIAN BARRICADE

LOCATION	ALIGNMENT AND STATION OFFSET	TYPE	QUANTITY (EA)
Rte 8 AND EB ON-RAMP FROM SPORTS ARENA Blvd: RIGHT SIDE	Sta 78+03.18′ 24.20′ Rt "M1AAB1"	REMOVE PEDESTRIAN BARRICADE	1
Rte 8 AND EB ON-RAMP FROM SPORTS ARENA Blvd: RIGHT SIDE	Sta 78+03.18′ 24.20′ Rt "M1AAB1"	PEDESTRIAN BARRICADE	1

SUMMARY OF QUANTITIES

Q-7

STATE OF CALIFORNIA - DEPARTMENT OF TRANSPORTATION
Caltrans DESIGN
FUNCTIONAL SUPERVISOR: KAZIM MAMDANI
CALCULATED-DESIGNED BY: ARY JAFF
CHECKED BY: SOLOMON TADESSE
REVISED BY
DATE REVISED

LAST REVISION 06-21-16
DATE PLOTTED => 04-OCT-2016
TIME PLOTTED => 11:30

Dist	COUNTY	ROUTE	POST MILES TOTAL PROJECT	SHEET No.	TOTAL SHEETS
11	SD	8	T0.5/R0.7	94	162

REGISTERED CIVIL ENGINEER 06-15-16 DATE

08-22-16
PLANS APPROVAL DATE

REGISTERED PROFESSIONAL ENGINEER SOLOMON TADESSE No. C62773 Exp. 06-30-18 CIVIL STATE OF CALIFORNIA

THE STATE OF CALIFORNIA OR ITS OFFICERS OR AGENTS SHALL NOT BE RESPONSIBLE FOR THE ACCURACY OR COMPLETENESS OF SCANNED COPIES OF THIS PLAN SHEET.

Exist IRRIGATION CONDUIT LOCATIONS

DIRECTION	LINE DESIGNATION	STATION	SHEET/LOCATION	PAVEMENT MARKER (NON- REFLECTIVE) TYPE A EA
EB	5VE1	76+26	C-1/ SD-8 MAINLINE	2
WB	5VW1	47+89	C-1/ SD-8 MAINLINE	2
EB	5VE1	96+94	C-2/ SD-8 MAINLINE	2
EB	M5	71+17	C-2/ EB ON RAMP FROM SPORTS ARENA Blvd	2
WB	5VW1	75+29	C-2/ SD-8 MAINLINE	2
EB	5VE1	115+30	C-3/ SD-8 MAINLINE	2
EB	5VE1	122+99	C-3/ SD-8 MAINLINE	2
WB	5VW1	86+88	C-3/ SD-8 MAINLINE	2
WB	5VW1	93+93	C-3/ SD-8 MAINLINE	2
WB	M2	86+87	C-3/ WB OFF RAMP TO SPORTS ARENA Blvd	2
EB	M1AB1	86+28	C-3/ EB ON RAMP FROM MIDWAY Dr	2
EB	5VE1	130+60	C-4/ SD-8 MAINLINE	2
WB	5VW1	101+03	C-4/ SD-8 MAINLINE	2
EB	5VE1	155+42	C-5/ SD-8 MAINLINE	2
WB	W	126+47	C-5/ SD-8 MAINLINE	2
EB	SD8S1	126+29	C-5/ SB 5 CONNECTOR	2
EB	SD8S1	130+63	C-5/ SB 5 CONNECTOR	2
WB	S2	53+79	C-5/ SB 5 CONNECTOR	2
WB	5VS3	143+86	C-5/ CONNECTOR FROM NB 5	2
	5M1	27+53	C-6/ MORENA Blvd	2
			TOTAL	40 *

* - FOR ADDITIONAL QUANTITIES, SEE PAVEMENT DELINEATION QUANTITIES.

RAISED RUMBLE BAR QUANTITY

LINE	DIRECTION	SHEET	LENGTH (LF)
5VW1	WB	C-30	216
		TOTAL	216

SUMMARY OF QUANTITIES
Q-8

STATE OF CALIFORNIA - DEPARTMENT OF TRANSPORTATION
Caltrans® DESIGN
FUNCTIONAL SUPERVISOR KAZIM MAMDANI
CALCULATED-DESIGNED BY DEVANGI DAVE
CHECKED BY SOLOMON TADESSE
REVISED BY
DATE REVISED

LAST REVISION 06-21-16 DATE PLOTTED => 04-OCT-2016 TIME PLOTTED => 11:30

Dist	COUNTY	ROUTE	POST MILES TOTAL PROJECT	SHEET No.	TOTAL SHEETS
11	SD	8	T0.5/R0.7	95	162

Joseph Rand 06-15-16
REGISTERED ELECTRICAL ENGINEER DATE

08-22-16
PLANS APPROVAL DATE

REGISTERED PROFESSIONAL ENGINEER
JOSEPH RAND
No. 11131
Exp. 06-30-17
ELECTRICAL
STATE OF CALIFORNIA

THE STATE OF CALIFORNIA OR ITS OFFICERS OR AGENTS SHALL NOT BE RESPONSIBLE FOR THE ACCURACY OR COMPLETENESS OF SCANNED COPIES OF THIS PLAN SHEET.

INDUCTIVE LOOP DETECTOR (TRAFFIC SIGNAL)

Rte	POST MILE	LOCATION DESCRIPTION	FACILITIES	DIRECTION	LOCATION OF INDUCTIVE LOOP DETECTORS (N) CENTERED IN LANE											INDUCTIVE LOOP DETECTOR
					ADVANCE, FRONT, MAIN LANE DETECTOR LOOPS IN LANE #						OR DETECTOR LOOPS				SEE DETAILS ON SHEET E-3	
					#1	#2	#3	#4	#5	#6	#1	#2	#3	#4		(EA)
8	0.537	Rte 8 AT SUNSET CLIFFS Blvd	SIGNAL	WB-OFF	5(L+)	5(L+)									DETAIL 'A'	10
															TOTAL	10

(N) NOT A SEPARATE PAY ITEM. FOR INFORMATION ONLY

NOTE:

LOOP IDENTIFICATION: 1(R+)
- 1 → QUANTITY OF LOOPS
- (R+) → IN DIRECTION OF TRAVEL TERMINATION PULL BOX LOCATION

LEGEND:

P - PASSAGE DETECTION
D - DEMAND DETECTION
Q - QUEUE DETECTION
OR - OFF-RAMP DETECTION

INDUCTIVE LOOP DETECTOR (RAMP METER)

Rte	POST MILE	LOCATION DESCRIPTION	FACILITIES	DIRECTION	LOCATION OF INDUCTIVE LOOP DETECTORS (N) CENTERED IN LANE											INDUCTIVE LOOP DETECTOR
					ADVANCE, FRONT, MAIN LANE DETECTOR LOOPS IN LANE #						DETECTOR LOOPS TOTAL IN EACH LANE				SEE DETAILS ON SHEET E-2 & E-3	
					#1	#2	#3	#4	#5	#6	#1	#2	#3	#4		(EA)
8	0.492	NIMITZ Blvd	RM	EB-ON							1(L+)	1(R+)	1(R+)		DETAIL "B'	3
8	1.234	MIDWAY Dr SB	RM	EB-ON							6(L+)	6(R+)			DETAIL 'C'	12
8	1.404	MIDWAY Dr NB	RM	EB-ON							5(L+)	6(R+)	6(R+)		DETAIL 'D'	18
8	2.120	W/O MORENA Blvd ROSECRANS TO 8	RM	EB								6(R+)	5(R+)		DETAIL 'E'	11
															TOTAL	44

(N) NOT A SEPARATE PAY ITEM. FOR INFORMATION ONLY

NOTE:

LOOP IDENTIFICATION: 1(R+)
- 1 → QUANTITY OF LOOPS
- (R+) → IN DIRECTION OF TRAVEL TERMINATION PULL BOX LOCATION

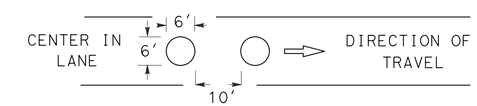

DETAIL 'I'

TYPICAL TYPE E LOOP PLACEMENT
NO SCALE
NOTE: POSITION OF LOOPS TO BE CENTERED IN LANE

NOTES & LEGEND:

1 - AB Exist DETECTOR LOOPS, REPLACE WITH TYPE E DETECTOR LOOPS.

2 - PLACE PER DETAIL 'I'.

3 - Exist DETECTOR LOOPS, PROTECT IN PLACE

INDUCTIVE LOOP DETECTOR

E-1

NO SCALE

APPROVED FOR ELECTRICAL WORK ONLY

STATE OF CALIFORNIA - DEPARTMENT OF TRANSPORTATION
Caltrans® TRAFFIC ELECTRICAL

FUNCTIONAL SUPERVISOR: RAJPREET SINGH
CALCULATED-DESIGNED BY: JOSEPH RAND
CHECKED BY: DANNY McCLURE
REVISED BY / DATE REVISED

LAST REVISION 06-21-16
DATE PLOTTED => 04-OCT-2016
TIME PLOTTED => 11:30

Dist	COUNTY	ROUTE	POST MILES TOTAL PROJECT	SHEET No.	TOTAL SHEETS
11	SD	8	T0.5/R0.7	96	162

Joseph Rand 06-15-16
REGISTERED ELECTRICAL ENGINEER DATE

08-22-16
PLANS APPROVAL DATE

REGISTERED PROFESSIONAL ENGINEER
JOSEPH RAND
No. 11131
Exp. 06-30-17
ELECTRICAL
STATE OF CALIFORNIA

THE STATE OF CALIFORNIA OR ITS OFFICERS OR AGENTS SHALL NOT BE RESPONSIBLE FOR THE ACCURACY OR COMPLETENESS OF SCANNED COPIES OF THIS PLAN SHEET.

INDUCTIVE LOOP DETECTOR (TMS)

Rte	POST MILE	LOCATION DESCRIPTION	FACILITIES	DIRECTION	LOCATION OF INDUCTIVE LOOP DETECTORS (N) CENTERED IN LANE						
					DETECTOR LOOPS					SEE DETAILS ON SHEET E-4	COMMENTS
					#1	#2	#3	#4	#5		
8	2.400	E/O MORENA Blvd	TMS	WB						DETAIL 'F'	PROTECT LOOPS IN PLACE
8	2.400	E/O MORENA Blvd	TMS	EB						DETAIL 'F'	
LOOPS ARE LOCATED 175' WEST OF SIGN											
Taylor St Hotel Circle EXIT ONLY											

(N) NOT A SEPARATE PAY ITEM. FOR INFORMATION ONLY

NOTE:

LOOP IDENTIFICATION: 1- (R+)

QUANTITY OF LOOPS

PULL BOX LOCATION IN DIRECTION OF TRAVEL

INDUCTIVE LOOP DETECTOR

E-2

APPROVED FOR ELECTRICAL WORK ONLY

STATE OF CALIFORNIA - DEPARTMENT OF TRANSPORTATION
Caltrans® TRAFFIC ELECTRICAL

FUNCTIONAL SUPERVISOR: RAJPREET SINGH
CALCULATED-DESIGNED BY: JOSEPH RAND
CHECKED BY: DANNY McCLURE
REVISED BY
DATE REVISED

LAST REVISION 10-06-16
DATE PLOTTED => 07-OCT-2016
TIME PLOTTED => 14:44

Dist	COUNTY	ROUTE	POST MILES TOTAL PROJECT	SHEET No.	TOTAL SHEETS
11	SD	8	T0.5/R0.7	97	162

REGISTERED ELECTRICAL ENGINEER — DATE: 06-15-16

PLANS APPROVAL DATE: 08-22-16

REGISTERED PROFESSIONAL ENGINEER — JOSEPH RAND No. 11131 Exp. 06-30-17 ELECTRICAL — STATE OF CALIFORNIA

THE STATE OF CALIFORNIA OR ITS OFFICERS OR AGENTS SHALL NOT BE RESPONSIBLE FOR THE ACCURACY OR COMPLETENESS OF SCANNED COPIES OF THIS PLAN SHEET.

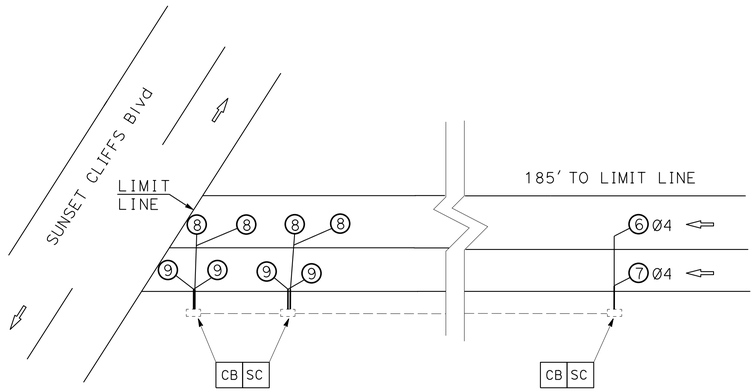

DETAIL 'A'
TRAFFIC SIGNAL

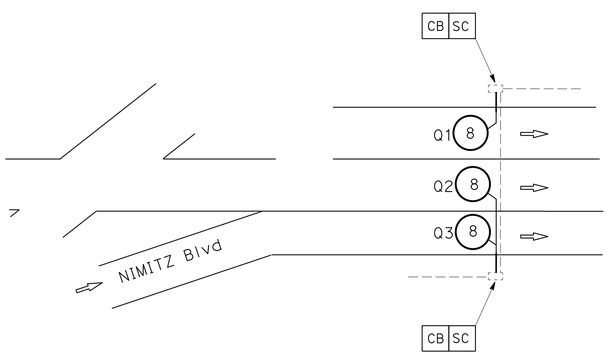

DETAIL 'B'
RAMP METER (FUTURE)

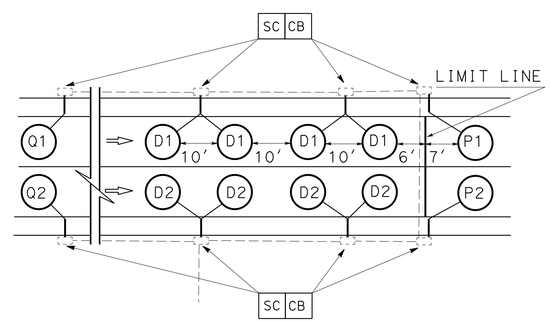

DETAIL 'C'
RAMP METER
MIDWAY Dr SOUTH BOUND
EASTBOUND ON ROUTE 8

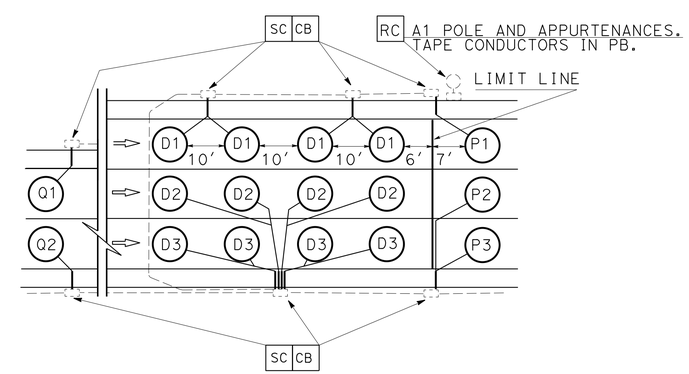

DETAIL 'D'
RAMP METER
MIDWAY Dr NORTH BOUND
EASTBOUND ON ROUTE 8

INDUCTIVE LOOP DETECTOR

E-3

NO SCALE

APPROVED FOR ELECTRICAL WORK ONLY

STATE OF CALIFORNIA - DEPARTMENT OF TRANSPORTATION
Caltrans® TRAFFIC ELECTRICAL

FUNCTIONAL SUPERVISOR: RAJPREET SINGH
CALCULATED-DESIGNED BY: JOSEPH RAND
CHECKED BY: DANNY McCLURE
REVISED BY / DATE REVISED

LAST REVISION 06-21-16
DATE PLOTTED => 04-OCT-2016
TIME PLOTTED => 11:30

Dist	COUNTY	ROUTE	POST MILES TOTAL PROJECT	SHEET No.	TOTAL SHEETS
11	SD	8	T0.5/R0.7	98	162

REGISTERED ELECTRICAL ENGINEER 06-15-16 DATE

08-22-16
PLANS APPROVAL DATE

REGISTERED PROFESSIONAL ENGINEER
JOSEPH RAND
No. 11131
Exp. 06-30-17
ELECTRICAL
STATE OF CALIFORNIA

THE STATE OF CALIFORNIA OR ITS OFFICERS OR AGENTS SHALL NOT BE RESPONSIBLE FOR THE ACCURACY OR COMPLETENESS OF SCANNED COPIES OF THIS PLAN SHEET.

NOTES AND LEGEND

SEE SHEET E-1

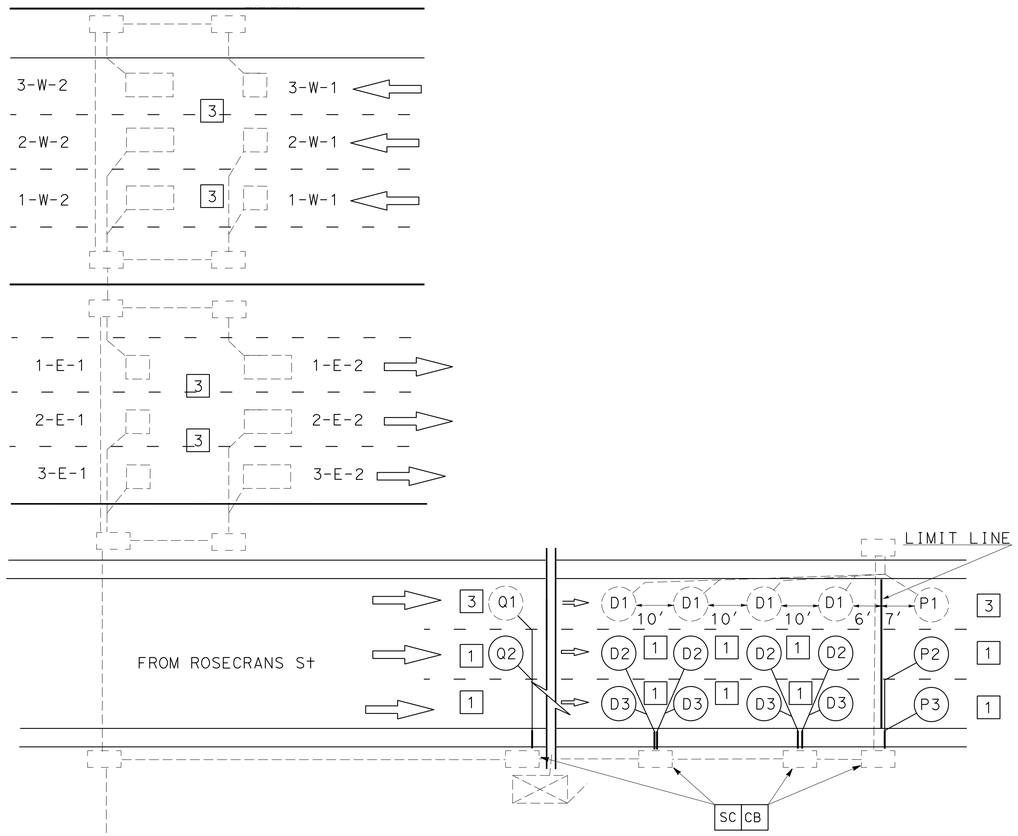

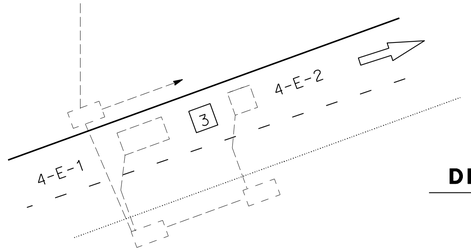

DETAIL 'E'
RM

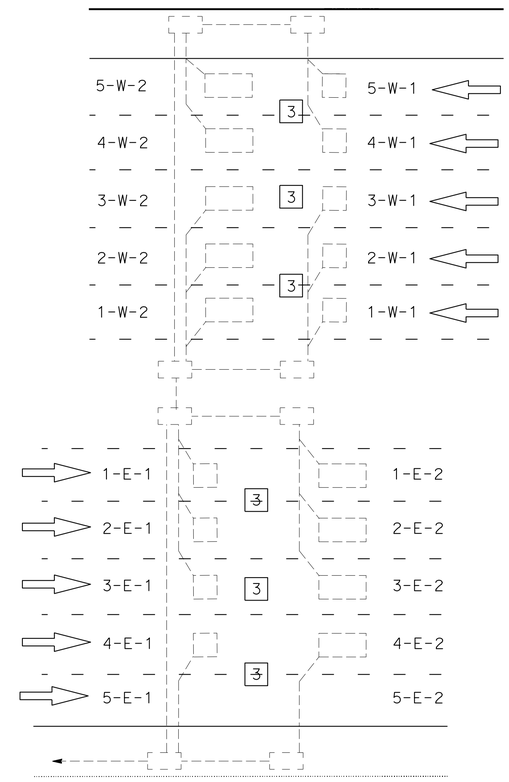

DETAIL 'F'
TMS

INDUCTIVE LOOP DETECTOR

E-4

NO SCALE

APPROVED FOR ELECTRICAL WORK ONLY

STATE OF CALIFORNIA - DEPARTMENT OF TRANSPORTATION
Caltrans® TRAFFIC ELECTRICAL

FUNCTIONAL SUPERVISOR: RAJPREET SINGH
CALCULATED-DESIGNED BY: JOSEPH RAND
CHECKED BY: DANNY McCLURE
REVISED BY
DATE REVISED

LAST REVISION 10-06-16
DATE PLOTTED => 07-OCT-2016
TIME PLOTTED => 14:45

Dist	COUNTY	ROUTE	POST MILES TOTAL PROJECT	SHEET No.	TOTAL SHEETS
11	SD	8	T0.5/R0.7	99	162

REGISTERED ELECTRICAL ENGINEER — DATE 06-15-16

08-22-16
PLANS APPROVAL DATE

REGISTERED PROFESSIONAL ENGINEER — JOSEPH RAND No. 11131 Exp. 06-30-17 ELECTRICAL — STATE OF CALIFORNIA

THE STATE OF CALIFORNIA OR ITS OFFICERS OR AGENTS SHALL NOT BE RESPONSIBLE FOR THE ACCURACY OR COMPLETENESS OF SCANNED COPIES OF THIS PLAN SHEET.

NOTES AND LEGEND:

1 - FOR ACCURATE RIGHT OF WAY DATA, CONTACT RIGHT OF WAY ENGINEERING AT THE DISTRICT OFFICE.

2 - RC ELECTROLIER AND APURTNANCES

3 - SP A0.40
4600 NIMITZ Blvd
SS Rte 8 WS MISSION BAY Dr

4 - RC PULL BOX. INSTALL No. 5 PULL BOX

5 - SERVICE DISCONNECT LOCATED 500' NE OF WORK AREA

CONDUIT LEGEND

N/C 1 - Exist 1½"C, 4#8(Ltg)

N/C 2 - Exist 1½"C, 2#8(Ltg)

N/C 3 - Exist 1"C, 2#10(Ltg)

N/C 4 - Exist 1½"C, 8#14(2 SIGNAL, 2 PPB)

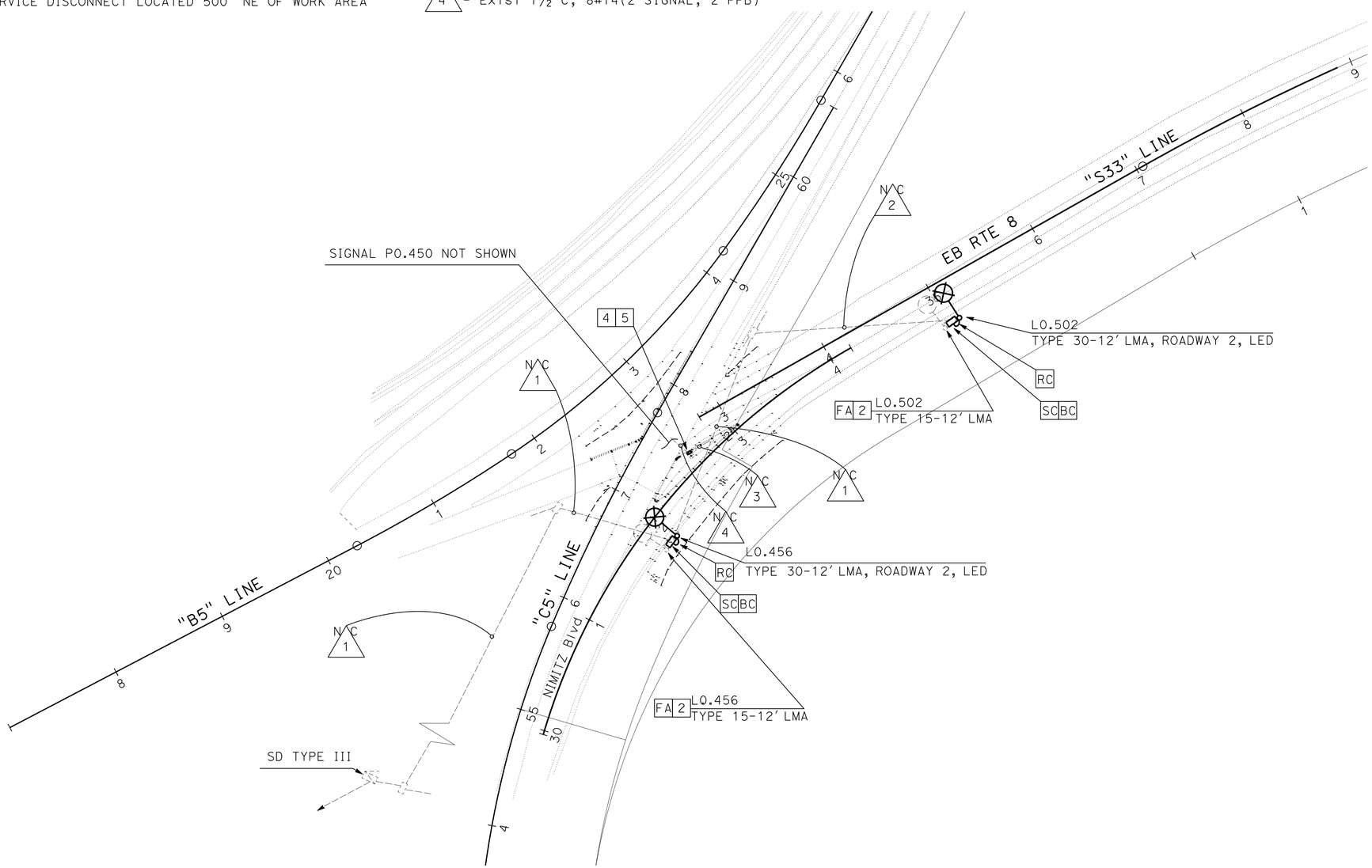

MODIFY EXISTING ELECTRICAL SYSTEM

E-5

SCALE: 1"=50'

STATE OF CALIFORNIA - DEPARTMENT OF TRANSPORTATION
Caltrans® TRAFFIC ELECTRICAL

FUNCTIONAL SUPERVISOR: RAJPREET SINGH
CALCULATED-DESIGNED BY: JOSEPH RAND
CHECKED BY: DANNY McCLURE
REVISED BY / DATE REVISED

LAST REVISION 06-21-16
DATE PLOTTED => 04-OCT-2016
TIME PLOTTED => 11:30

Dist	COUNTY	ROUTE	POST MILES TOTAL PROJECT	SHEET No.	TOTAL SHEETS
11	SD	8	T0.5/R0.7	100	162

REGISTERED ELECTRICAL ENGINEER 06-15-16 DATE

08-22-16
PLANS APPROVAL DATE

REGISTERED PROFESSIONAL ENGINEER
JOSEPH RAND
No. 11131
Exp. 06-30-17
ELECTRICAL
STATE OF CALIFORNIA

THE STATE OF CALIFORNIA OR ITS OFFICERS OR AGENTS SHALL NOT BE RESPONSIBLE FOR THE ACCURACY OR COMPLETENESS OF SCANNED COPIES OF THIS PLAN SHEET.

NOTES AND LEGEND:

1 - FOR ACCURATE RIGHT OF WAY DATA, CONTACT RIGHT OF WAY ENGINEERING AT THE DISTRICT OFFICE.

[2] - [RC] ELECTROLIER AND APURTNANCES

3 - SP A1.520
3479½ CHANNEL Wy
SOUTH SIDE Rte 8 EAST SIDE
SPORTS ARENA Blvd

CONDUIT LEGEND

N/C 1 - Exist 1½"C, 2#6(Ltg), 2#6(SIGN)

N/C 2 - Exist 1½"C, 2#6(SIGN)

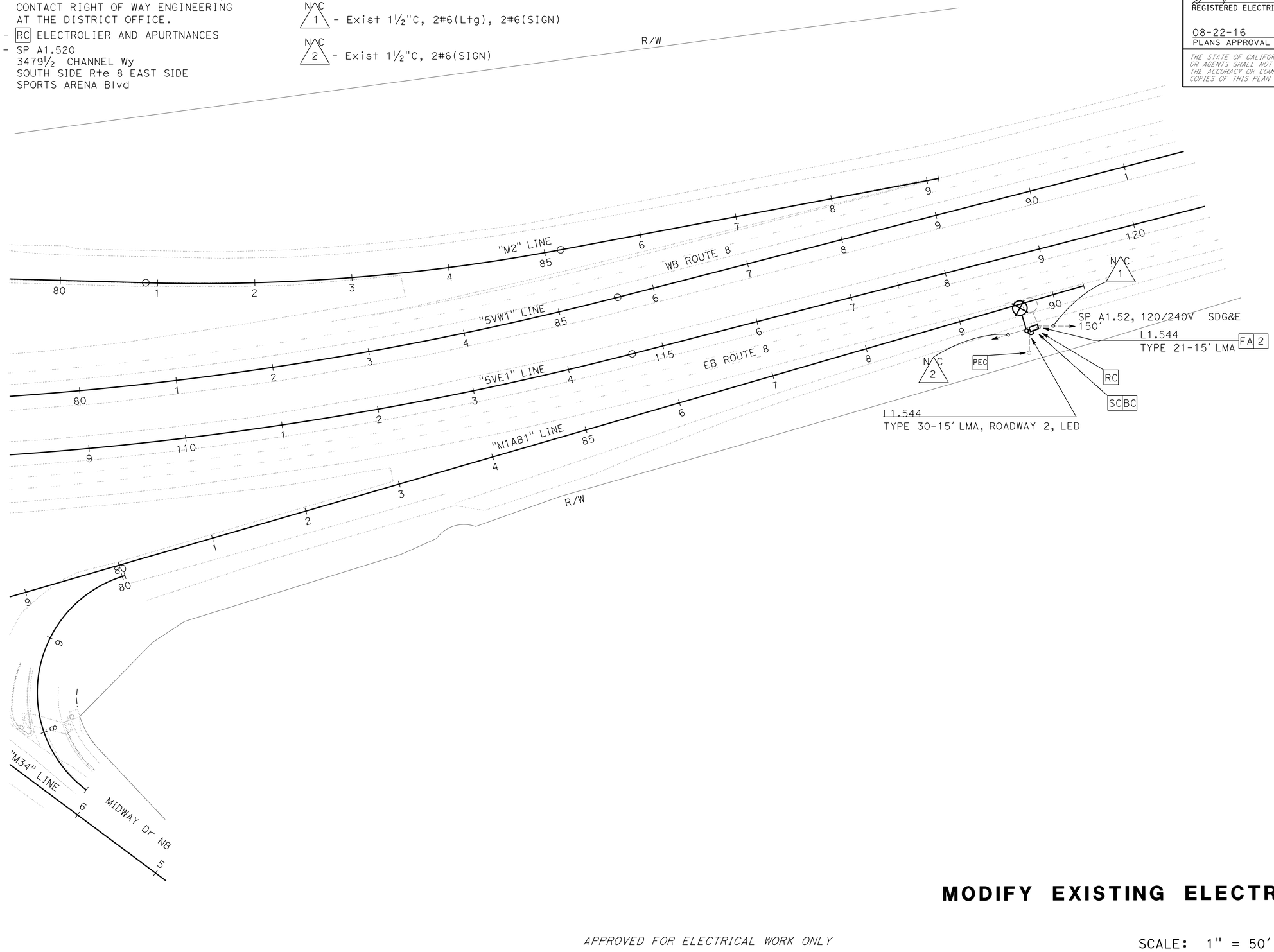

MODIFY EXISTING ELECTRICAL SYSTEM

E-6

APPROVED FOR ELECTRICAL WORK ONLY

SCALE: 1" = 50'

STATE OF CALIFORNIA - DEPARTMENT OF TRANSPORTATION
Caltrans® TRAFFIC ELECTRICAL

FUNCTIONAL SUPERVISOR: RAJPREET SINGH

CALCULATED-DESIGNED BY: JOSEPH RAND
CHECKED BY: DANNY McCLURE
REVISED BY
DATE REVISED

LAST REVISION 06-21-16
DATE PLOTTED => 04-OCT-2016
TIME PLOTTED => 11:30