Dist	COUNTY	ROUTE	POST MILES TOTAL PROJECT	SHEET No.	TOTAL SHEETS
04	Son	1	30.5	1	97

STATE OF CALIFORNIA

DEPARTMENT OF TRANSPORTATION

ACNH-P001(618)E

PROJECT PLANS FOR CONSTRUCTION ON

STATE HIGHWAY

IN SONOMA COUNTY
NEAR FORT ROSS
AT 2.6 MILES SOUTH OF FORT ROSS ROAD

TO BE SUPPLEMENTED BY STANDARD PLANS DATED 2010

INDEX OF PLANS

SHEET No.	DESCRIPTION
1	TITLE SHEET AND LOCATION MAP
2 - 5	TYPICAL CROSS SECTIONS
6	LAYOUT
7	PROFILE
8 - 13	CONSTRUCTION DETAILS
14 - 16	TEMPORARY WATER POLLUTION CONTROL PLAN, DETAILS AND QUANTITIES
17 - 22	DRAINAGE PLAN, PROFILES, DETAILS AND QUANTITIES
23	SUBSURFACE DRAINS
24 - 25	CONSTRUCTION AREA SIGNS
26 - 29	STAGE CONSTRUCTION AND TRAFFIC HANDLING PLAN AND QUANTITIES
30	PAVEMENT DELINEATION PLAN
31	SUMMARY OF QUANTITIES
32 - 34	EROSION CONTROL LEGEND AND QUANTITIES, PLAN AND DETAILS
35 - 41	ELECTRICAL PLANS
42 - 48	SPECIAL ELECTRICAL STRUCTURES
49 - 78	REVISED STANDARD PLANS
	STRUCTURE PLANS
79 - 97	SOIL NAIL WALL AT PM 30.5

THE STANDARD PLANS LIST APPLICABLE TO THIS CONTRACT IS INCLUDED IN THE NOTICE TO BIDDERS AND SPECIAL PROVISIONS BOOK.

LOCATION MAP

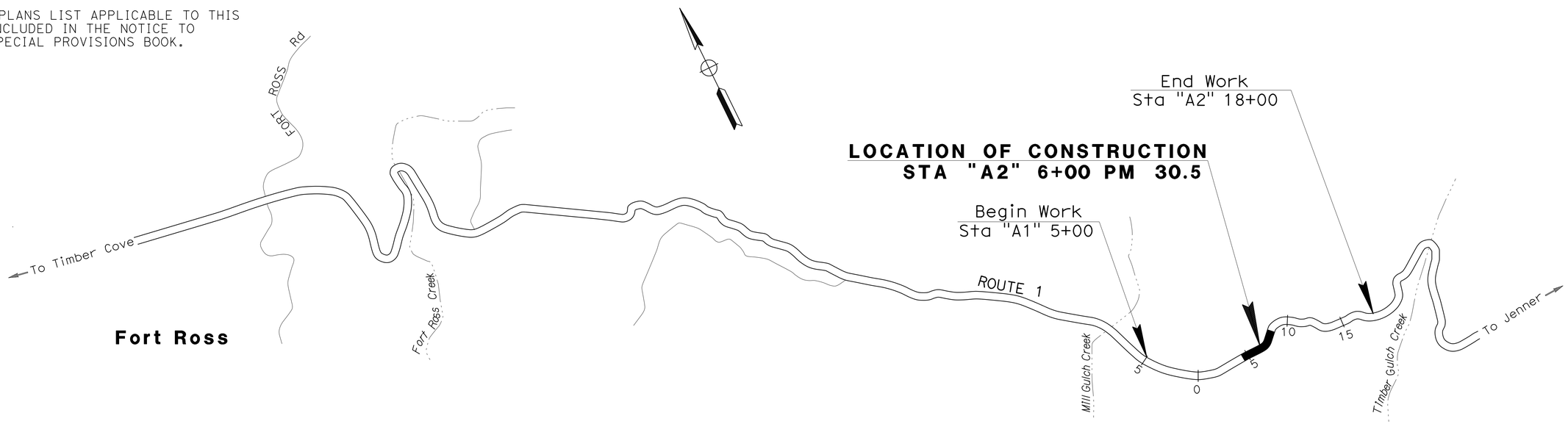

NO SCALE

THE CONTRACTOR SHALL POSSESS THE CLASS (OR CLASSES) OF LICENSE AS SPECIFIED IN THE "NOTICE TO BIDDERS."

PROJECT MANAGER: LILIAN ACORDA

DESIGN MANAGER: STEWART LEE

2-24-16

PROJECT ENGINEER REGISTERED CIVIL ENGINEER — DATE

REGISTERED PROFESSIONAL ENGINEER — A. Nazeer Babacarkhial — No. 81709 — Exp. 3-31-18 — CIVIL — STATE OF CALIFORNIA

June 27, 2016

PLANS APPROVAL DATE

THE STATE OF CALIFORNIA OR ITS OFFICERS OR AGENTS SHALL NOT BE RESPONSIBLE FOR THE ACCURACY OR COMPLETENESS OF SCANNED COPIES OF THIS PLAN SHEET.

CONTRACT No.	04-3G0804
PROJECT ID	0400021272

LAST REVISION 06-14-16 — DATE PLOTTED => 19-SEP-2016 — TIME PLOTTED => 13:31

Dist	COUNTY	ROUTE	POST MILES TOTAL PROJECT	SHEET No.	TOTAL SHEETS
04	Son	1	30.5	2	97

REGISTERED CIVIL ENGINEER 2-24-16 DATE

6-27-16
PLANS APPROVAL DATE

REGISTERED PROFESSIONAL ENGINEER A. Nazeer Babacarkhial No. 81709 Exp. 3-31-18 CIVIL STATE OF CALIFORNIA

THE STATE OF CALIFORNIA OR ITS OFFICERS OR AGENTS SHALL NOT BE RESPONSIBLE FOR THE ACCURACY OR COMPLETENESS OF SCANNED COPIES OF THIS PLAN SHEET.

NOTES:

1. DIMENSIONS OF THE PAVEMENT STRUCTURES (STRUCTURAL SECTIONS) ARE SUBJECT TO TOLERANCES SPECIFIED IN THE STANDARD SPECIFICATIONS.
2. FOR GEOSYNTHETIC REINFORCEMENT LENGTH AND SPACING, SEE CONSTRUCTION DETAILS SHEET.

ROUTE 1
DESIGN DESIGNATION

2015 ADT = 2000 D = 66.09%
2036 ADT = 2400 T = 6.2%
2036 DHV = 120 V = 15 MPH
2016 ESAL = 377,000
TI_{20} = 8

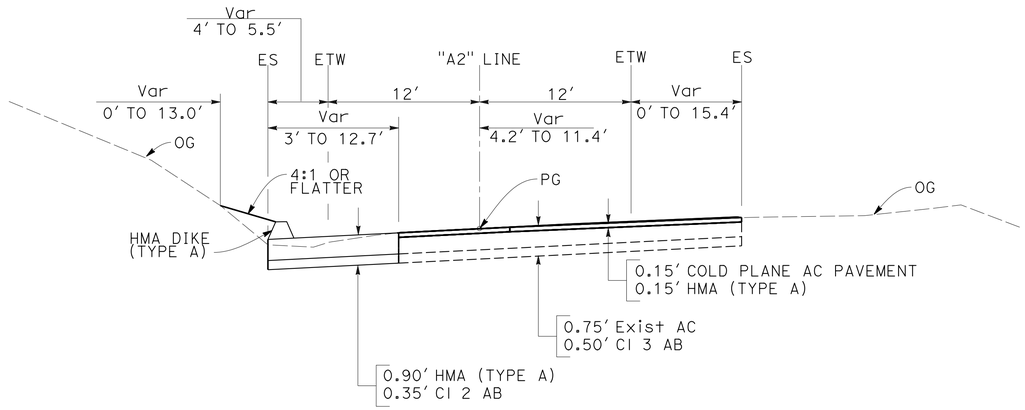

"A2" 2+85 TO "A2" 4+14.67
"A2" 8+34.51 TO "A2" 8+43.29

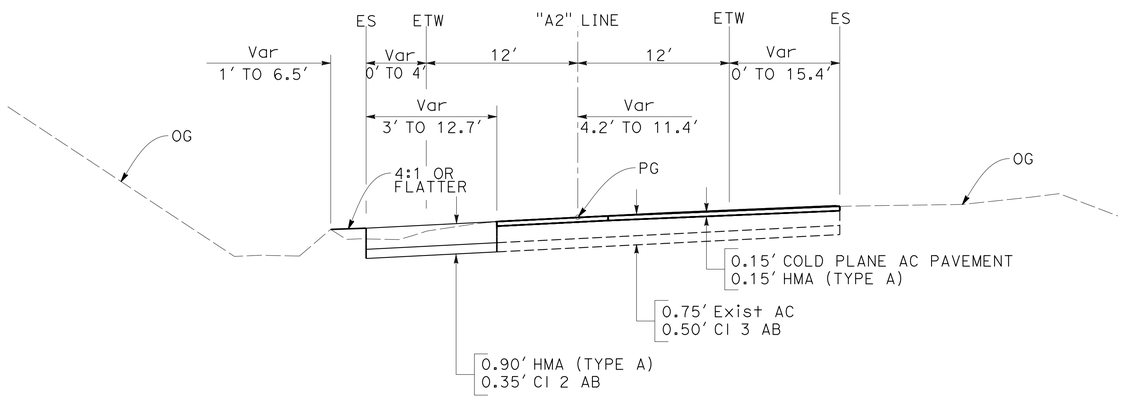

"A2" 2+80.01 TO "A2" 2+85

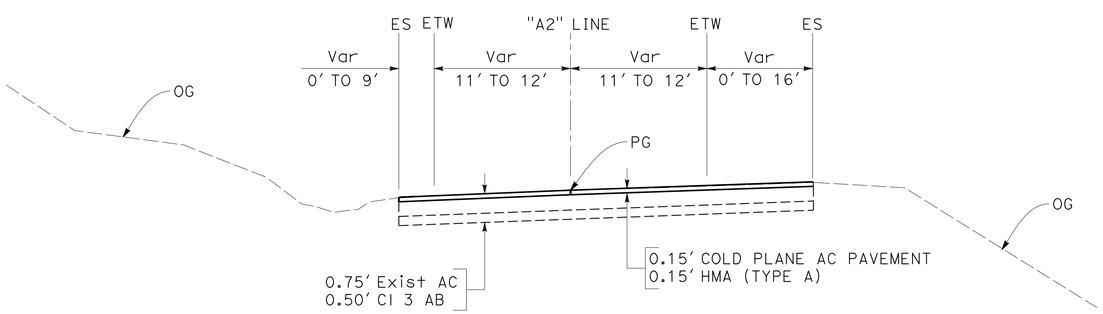

"A2" 2+57.45 TO "A2" 2+80.01
"A2" 8+43.29 TO "A2" 11+11.95

ROUTE 1

TYPICAL CROSS SECTIONS

NO SCALE

X-1

STATE OF CALIFORNIA - DEPARTMENT OF TRANSPORTATION
Caltrans
DESIGN

FUNCTIONAL SUPERVISOR: STEWART LEE

CALCULATED-DESIGNED BY: NAZEER BABACARKHIAL
CHECKED BY: STEWART LEE

REVISED BY: NB
DATE REVISED: 2-19-16

LAST REVISION 05-27-16
DATE PLOTTED => 19-SEP-2016
TIME PLOTTED => 13:31

Dist	COUNTY	ROUTE	POST MILES TOTAL PROJECT	SHEET No.	TOTAL SHEETS
04	Son	1	30.5	3	97

REGISTERED CIVIL ENGINEER 2-24-16 DATE

6-27-16
PLANS APPROVAL DATE

REGISTERED PROFESSIONAL ENGINEER
A. Nazeer Babacarkhial
No. 81709
Exp. 3-31-18
CIVIL
STATE OF CALIFORNIA

THE STATE OF CALIFORNIA OR ITS OFFICERS OR AGENTS SHALL NOT BE RESPONSIBLE FOR THE ACCURACY OR COMPLETENESS OF SCANNED COPIES OF THIS PLAN SHEET.

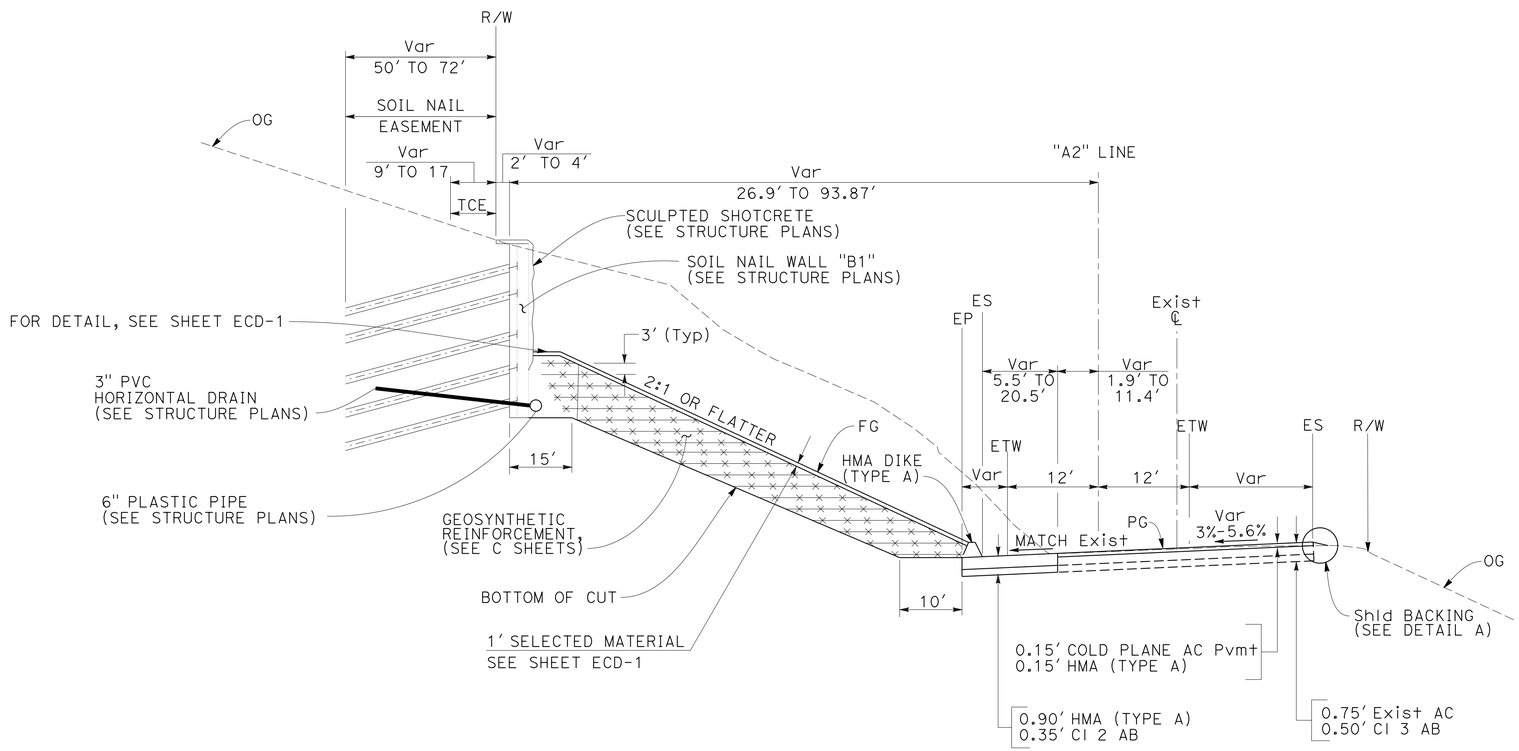

"A2" 4+14.67 TO 4+54.12
"A2" 7+65.60 TO 8+34.51

ROUTE 1

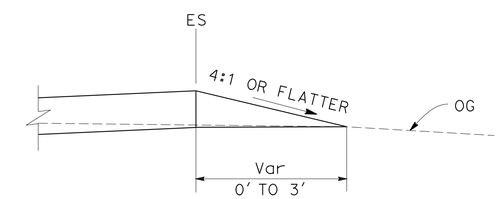

DETAIL A

TYPICAL CROSS SECTIONS

NO SCALE

FOR NOTES, ABBREVIATIONS AND LEGEND, SEE SHEET X-1

X-2

NAZEER BABACARKHIAL	NB	REVISED BY	
STEWART LEE	2-19-16	DATE REVISED	
CALCULATED-DESIGNED BY			
CHECKED BY			
FUNCTIONAL SUPERVISOR			
STEWART LEE			

STATE OF CALIFORNIA - DEPARTMENT OF TRANSPORTATION
Caltrans
DESIGN

LAST REVISION 05-27-16 | DATE PLOTTED => 19-SEP-2016 | TIME PLOTTED => 13:31

Dist	COUNTY	ROUTE	POST MILES TOTAL PROJECT	SHEET No.	TOTAL SHEETS
04	Son	1	30.5	4	97

REGISTERED CIVIL ENGINEER 2-24-16 DATE

6-27-16
PLANS APPROVAL DATE

REGISTERED PROFESSIONAL ENGINEER
A. Nazeer Babacarkhial
No. 81709
Exp. 3-31-18
CIVIL
STATE OF CALIFORNIA

THE STATE OF CALIFORNIA OR ITS OFFICERS OR AGENTS SHALL NOT BE RESPONSIBLE FOR THE ACCURACY OR COMPLETENESS OF SCANNED COPIES OF THIS PLAN SHEET.

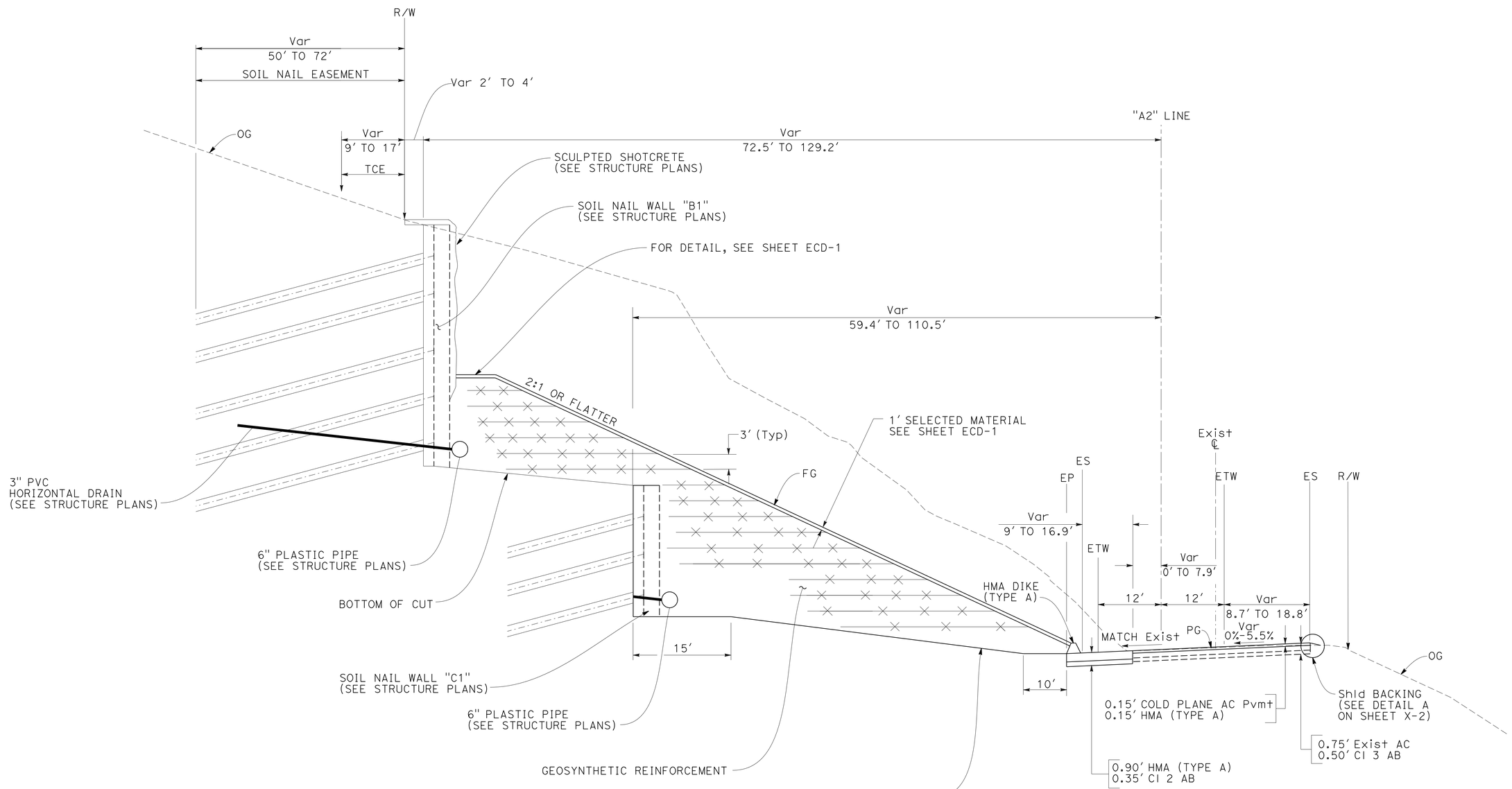

"A2" 4+54.12 TO 5+50.26
"A2" 6+94.10 TO 7+65.60

ROUTE 1

TYPICAL CROSS SECTIONS

NO SCALE

FOR NOTES, ABBREVIATIONS AND LEGEND, SEE SHEET X-1

X-3

STATE OF CALIFORNIA - DEPARTMENT OF TRANSPORTATION
Caltrans
DESIGN

FUNCTIONAL SUPERVISOR: STEWART LEE
CALCULATED-DESIGNED BY: NAZEER BABACARKHIAL
CHECKED BY: STEWART LEE
REVISED BY: NB
DATE REVISED: 2-19-16

LAST REVISION 05-27-16
DATE PLOTTED => 19-SEP-2016
TIME PLOTTED => 13:31

Dist	COUNTY	ROUTE	POST MILES TOTAL PROJECT	SHEET No.	TOTAL SHEETS
04	Son	1	30.5	5	97

REGISTERED CIVIL ENGINEER 2-24-16 DATE

6-27-16
PLANS APPROVAL DATE

REGISTERED PROFESSIONAL ENGINEER A. Nazeer Babacarkhial No. 81709 Exp. 3-31-18 CIVIL STATE OF CALIFORNIA

THE STATE OF CALIFORNIA OR ITS OFFICERS OR AGENTS SHALL NOT BE RESPONSIBLE FOR THE ACCURACY OR COMPLETENESS OF SCANNED COPIES OF THIS PLAN SHEET.

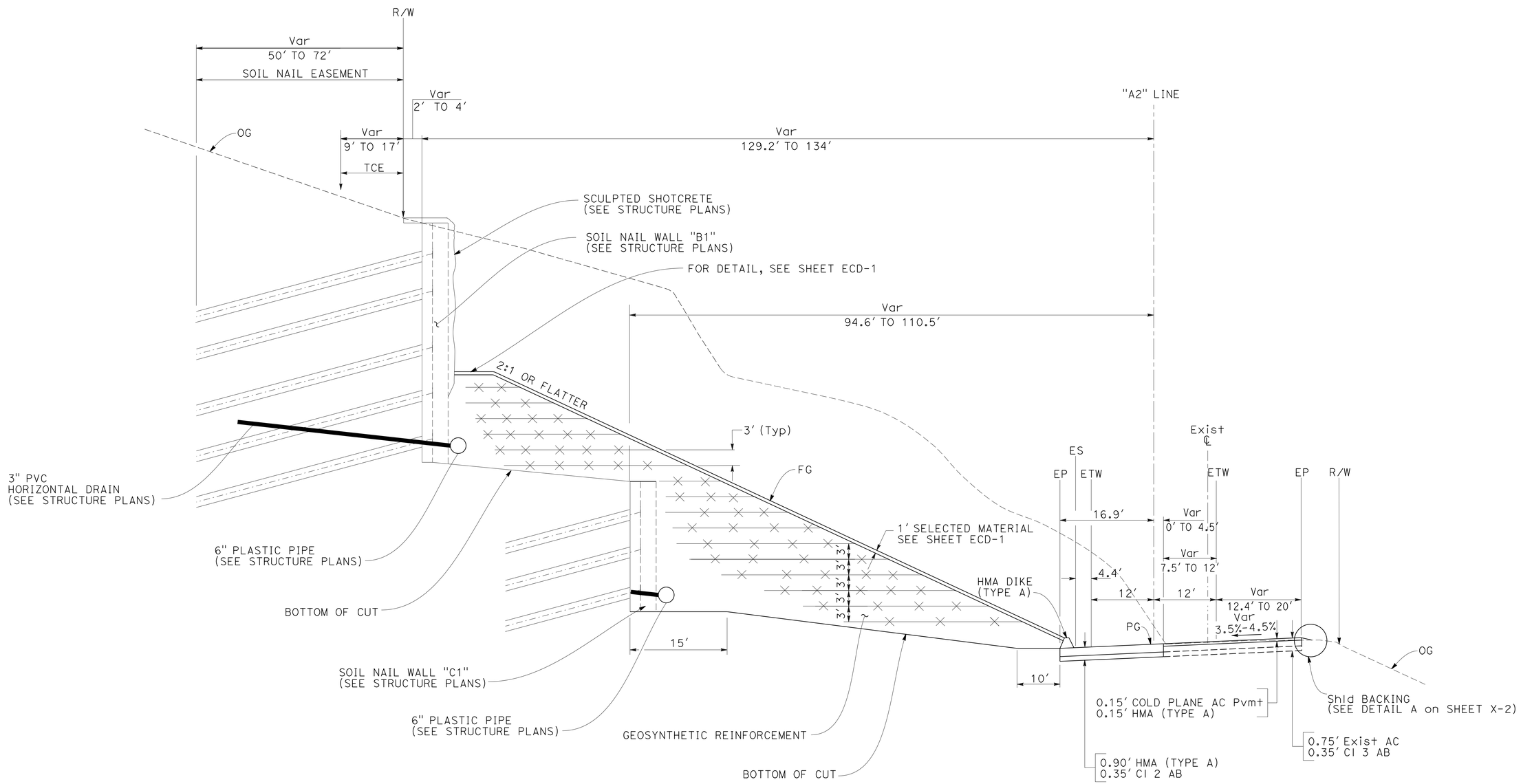

"A2" 5+50.26 TO 6+94.10

ROUTE 1

TYPICAL CROSS SECTIONS

NO SCALE

FOR NOTES, ABBREVIATIONS AND LEGEND, SEE SHEET X-1

X-4

STATE OF CALIFORNIA - DEPARTMENT OF TRANSPORTATION

Caltrans

DESIGN

FUNCTIONAL SUPERVISOR: STEWART LEE

CALCULATED-DESIGNED BY: NAZEER BABACARKHIAL

CHECKED BY: STEWART LEE

REVISED BY: NB

DATE REVISED: 2-19-16

LAST REVISION 05-27-16

DATE PLOTTED => 19-SEP-2016

TIME PLOTTED => 13:31

Dist	COUNTY	ROUTE	POST MILES TOTAL PROJECT	SHEET No.	TOTAL SHEETS
04	Son	1	30.5	6	97

2-24-16
REGISTERED CIVIL ENGINEER DATE

6-27-16
PLANS APPROVAL DATE

REGISTERED PROFESSIONAL ENGINEER
A. Nazeer Babacarkhial
No. 81709
Exp. 3-31-18
CIVIL
STATE OF CALIFORNIA

THE STATE OF CALIFORNIA OR ITS OFFICERS OR AGENTS SHALL NOT BE RESPONSIBLE FOR THE ACCURACY OR COMPLETENESS OF SCANNED COPIES OF THIS PLAN SHEET.

NOTE:

FOR ACCURATE RIGHT OF WAY DATA, CONTACT RIGHT OF WAY ENGINEERING AT THE DISTRICT OFFICE.

NOTES:

1. FOR DETAIL OF TEMPORARY ELECTRICAL EQUIPMENT LOCATION, SEE ELECTRICAL SHEETS.
2. DATUM REFERENCES:

HORIZONTAL DATUM NAD 83
VERTICAL DATUM NAVD 88

PSNE COORDINATES

No. ▽	STATION	OFFSET	X	Y
1	3+26.89	53.77′	6213147.087	1946720.774
2	3+96.17	1365.38′	6213253.068	1949788.873
3	6+30.89	211.45′	6213432.279	1946779.744
4	7+26.04	181.11′	6213498.985	1946744.225

TCE COORDINATES

No. ⟨#⟩	STATION	OFFSET	X	Y
1	4+01.32	50′	6213205.418	1946684.024
2	4+51.44	118.50′	6213274.143	1946727.585
3	6+21.24	150.38′	6213415.765	1946720.542
4	6+49.09	142.22′	6213436.695	1946709.3716

CURVE DATA

No. (#)	R	Δ	T	L
1	1097′	10° 37′ 48"	102.07′	203.55′
2	730′	42° 44′ 57"	285.76′	544.76′
3	1659′	11° 31′ 20"	167.37′	333.61′
4	185′	52° 12′ 29"	90.65′	168.57′
5	186′	54° 23′ 35"	95.78′	176.96′

LEGEND:

0.15′ COLD PLANE AC PAVEMENT
0.15′ HMA (TYPE A)
HMA (TYPE A)
ROADWAY WIDENING
ACQUIRED R/W
PERMANENT SOIL NAIL EASEMENT (PSNE) — — — — PSNE — — — —
ENVIRONMENTALLY SENSITIVE AREA (ESA) —×— ESA —×—

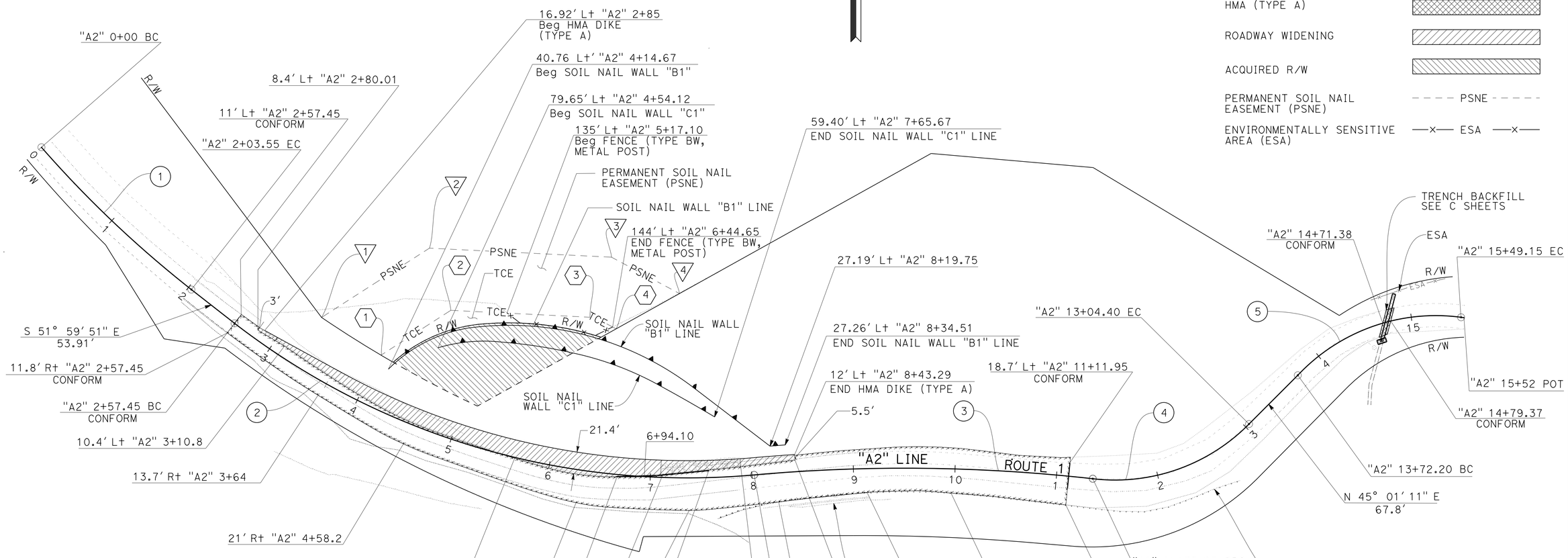

LAYOUT

SCALE: 1" = 50′

L-1

STATE OF CALIFORNIA - DEPARTMENT OF TRANSPORTATION
Caltrans
DESIGN

FUNCTIONAL SUPERVISOR: STEWART LEE
CALCULATED-DESIGNED BY: NAZEER BABACARKHIAL
CHECKED BY: STEWART LEE
REVISED BY: NB
DATE REVISED: 2-19-16

LAST REVISION 05-27-16
DATE PLOTTED => 19-SEP-2016
TIME PLOTTED => 13:31

Dist	COUNTY	ROUTE	POST MILES TOTAL PROJECT	SHEET No.	TOTAL SHEETS
04	Son	1	30.5	7	97

REGISTERED CIVIL ENGINEER 2-24-16 DATE

6-27-16
PLANS APPROVAL DATE

REGISTERED PROFESSIONAL ENGINEER A. Nazeer Babacarkhial No. 81709 Exp. 3-31-18 CIVIL STATE OF CALIFORNIA

THE STATE OF CALIFORNIA OR ITS OFFICERS OR AGENTS SHALL NOT BE RESPONSIBLE FOR THE ACCURACY OR COMPLETENESS OF SCANNED COPIES OF THIS PLAN SHEET.

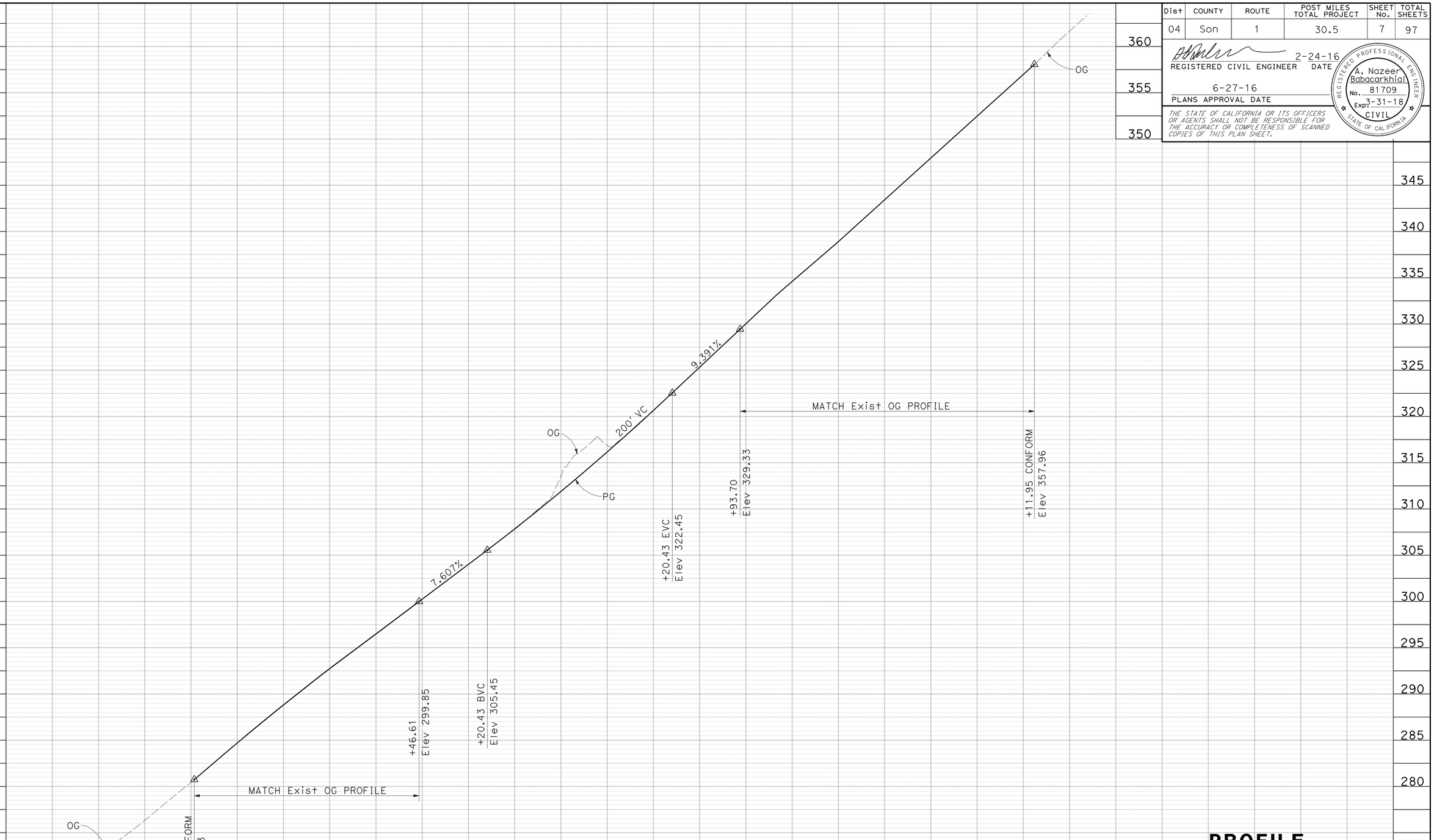

PROFILE

SCALE: Horiz 1" = 50'
Vert 1" = 5'

P-1

STATION	1	2	3	4	5	6	7	8	9	10	1	2	TOTAL
CY Exc							28690						
CY Emb							15506						

STATE OF CALIFORNIA - DEPARTMENT OF TRANSPORTATION
Caltrans® DESIGN

FUNCTIONAL SUPERVISOR: STEWART LEE
CALCULATED-DESIGNED BY: NAZEER BABACARKHIAL
CHECKED BY: STEWART LEE
REVISED BY: NB
DATE REVISED: 2-19-16

LAST REVISION 05-27-16
DATE PLOTTED => 19-SEP-2016
TIME PLOTTED => 13:31

Dist	COUNTY	ROUTE	POST MILES TOTAL PROJECT	SHEET No.	TOTAL SHEETS
04	Son	1	30.5	8	97

REGISTERED CIVIL ENGINEER 2-24-16 DATE

6-27-16
PLANS APPROVAL DATE

REGISTERED PROFESSIONAL ENGINEER A. Nazeer Babacarkhial No. 81709 Exp. 3-31-18 CIVIL STATE OF CALIFORNIA

THE STATE OF CALIFORNIA OR ITS OFFICERS OR AGENTS SHALL NOT BE RESPONSIBLE FOR THE ACCURACY OR COMPLETENESS OF SCANNED COPIES OF THIS PLAN SHEET.

NOTE:

FOR ACCURATE RIGHT OF WAY DATA, CONTACT RIGHT OF WAY ENGINEERING AT THE DISTRICT OFFICE.

NOTES:

1. ALL ELEVATIONS ARE 15' APART UNLESS OTHERWISE NOTED.
2. SEE D SHEETS FOR DETAIL OF DRAINAGE SYSTEM AND ELEMENTS.

LEGEND:

ROADWAY WIDENING

PSNE — PERMANENT SOIL NAIL EASEMENT (PSNE)

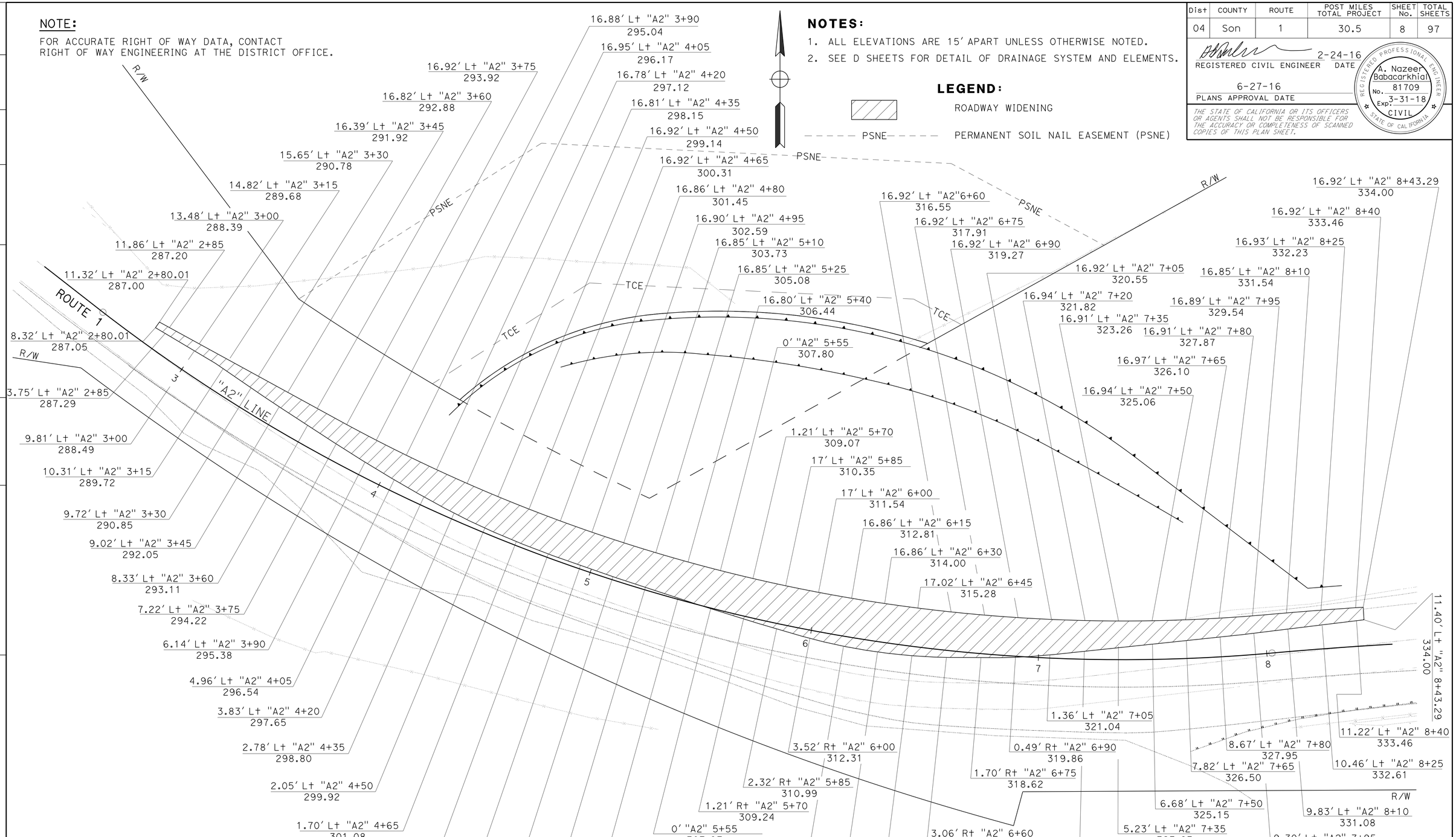

CONSTRUCTION DETAILS
PAVEMENT ELEVATION PLAN

NO SCALE

APPROVED FOR PAVEMENT ELEVATION WORK ONLY

C-1

REVISED BY	DATE REVISED
NB	2-19-16

NAZEER BABACARKHIAL — STEWART LEE

CALCULATED-DESIGNED BY — CHECKED BY

FUNCTIONAL SUPERVISOR — STEWART LEE

STATE OF CALIFORNIA - DEPARTMENT OF TRANSPORTATION — DESIGN

LAST REVISION 05-27-16 | DATE PLOTTED => 19-SEP-2016 | TIME PLOTTED => 13:31

Dist	COUNTY	ROUTE	POST MILES TOTAL PROJECT	SHEET No.	TOTAL SHEETS
04	Son	1	30.5	9	97

REGISTERED CIVIL ENGINEER 2-24-16 DATE

6-27-16
PLANS APPROVAL DATE

REGISTERED PROFESSIONAL ENGINEER Mohammad Zabolzadeh No. 52953 Exp. 12-31-16 CIVIL STATE OF CALIFORNIA

THE STATE OF CALIFORNIA OR ITS OFFICERS OR AGENTS SHALL NOT BE RESPONSIBLE FOR THE ACCURACY OR COMPLETENESS OF SCANNED COPIES OF THIS PLAN SHEET.

NOTE:

1. THE MAXIMUM LENGTH OF THE GEOSYNTHETIC REINFORCEMENT SHOULD BE 0.75H OR FROM THE FINISH GRADE TO THE WALL OR THE TEMPORARY CONSTRUCTION CUT LINE, WHICHEVER IS GREATER.

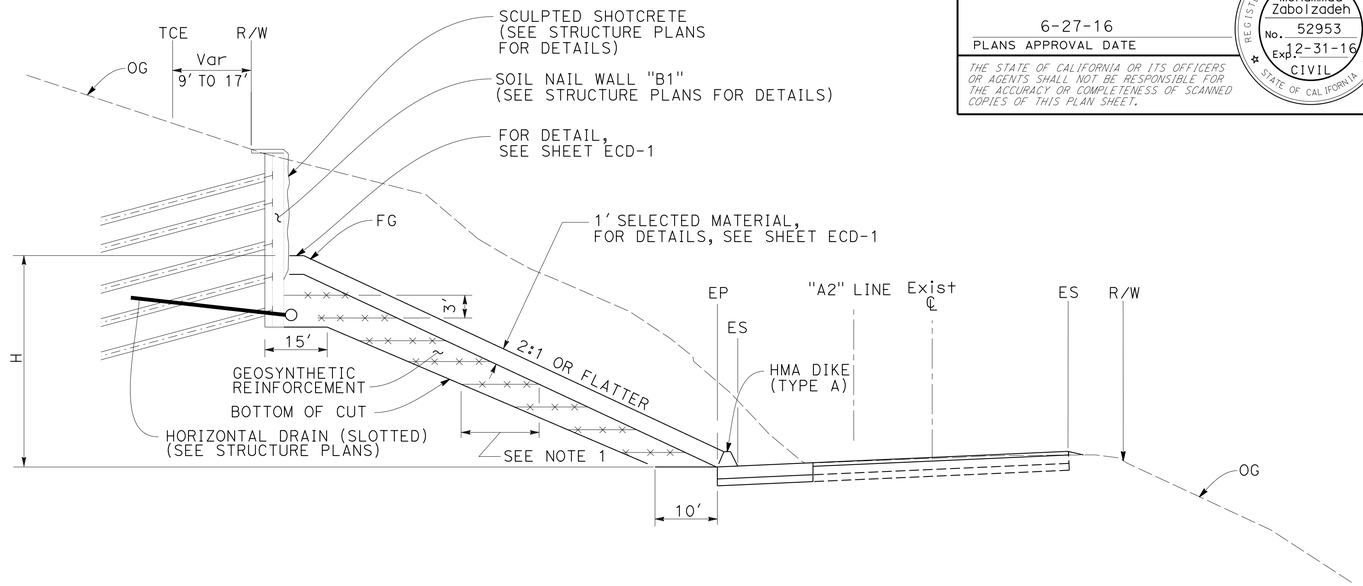

"A2" 4+14.67 TO 4+54.12
"A2" 7+65.60 TO 8+34

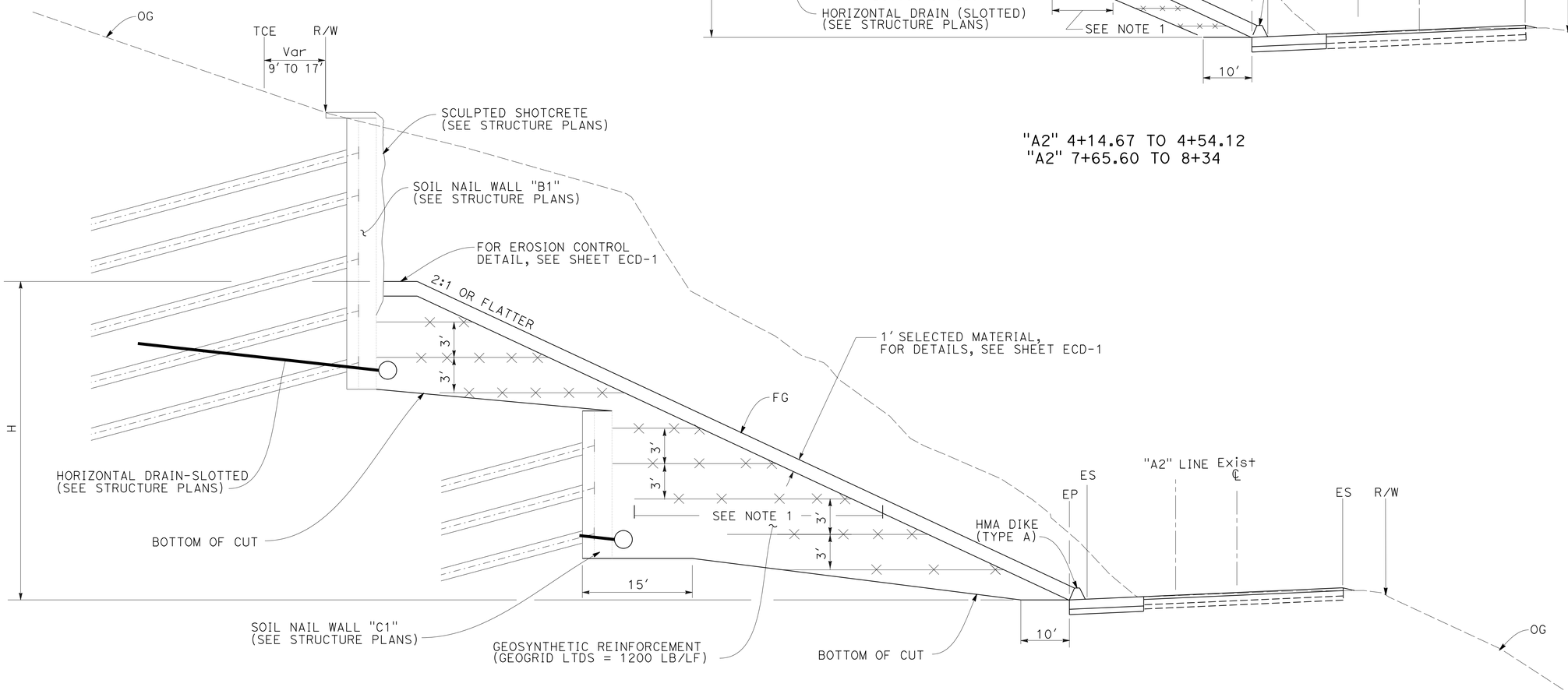

ROUTE 1

"A2" 4+54.12 TO 7+65.60

CONSTRUCTION DETAILS

NO SCALE

C-2

STATE OF CALIFORNIA - DEPARTMENT OF TRANSPORTATION
Caltrans
GEOTECHNICAL

FUNCTIONAL SUPERVISOR: HOOSHMAND NIKOUI-G
CALCULATED-DESIGNED BY: MOHAMMAD ZABOLZADEH
CHECKED BY: ALI KADDOURA
REVISED BY: NB
DATE REVISED: 2-19-16

LAST REVISION 05-27-16
DATE PLOTTED => 19-SEP-2016
TIME PLOTTED => 13:31

Dist	COUNTY	ROUTE	POST MILES TOTAL PROJECT	SHEET No.	TOTAL SHEETS
04	Son	1	30.5	10	97

REGISTERED CIVIL ENGINEER DATE 2-24-16

PLANS APPROVAL DATE 6-27-16

REGISTERED PROFESSIONAL ENGINEER A. Nazeer Babacarkhial No. 81709 Exp. 3-31-18 CIVIL STATE OF CALIFORNIA

THE STATE OF CALIFORNIA OR ITS OFFICERS OR AGENTS SHALL NOT BE RESPONSIBLE FOR THE ACCURACY OR COMPLETENESS OF SCANNED COPIES OF THIS PLAN SHEET.

LEGEND:

ROADWAY EXCAVATION

STRUCTURE EXCAVATION

ABBREVIATION:

PSNE PERMANENT SOIL NAIL EASEMENT

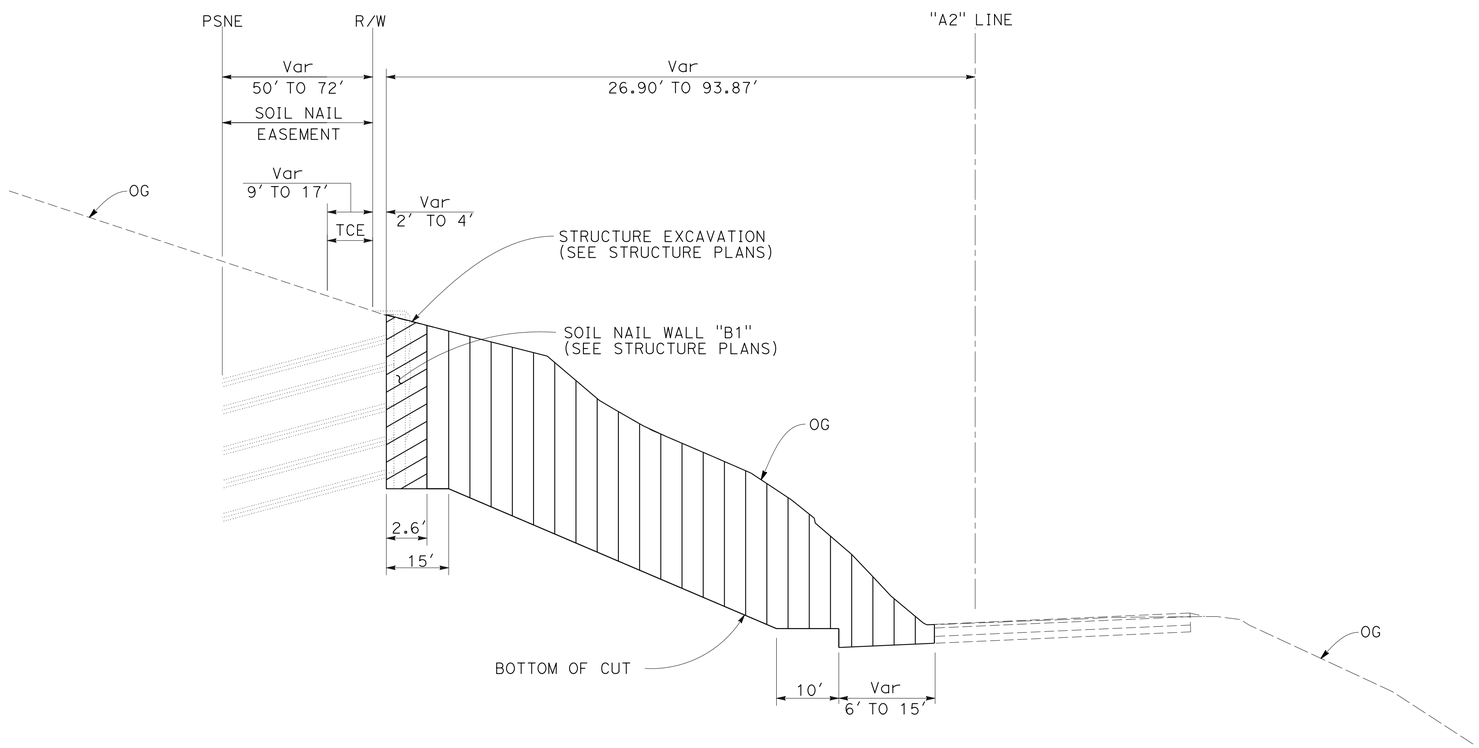

LIMIT OF EXCAVATION

"A2" 4+14.67 TO 4+54.12
"A2" 7+65.60 TO 8+34

CONSTRUCTION DETAILS

NO SCALE

C-3

STATE OF CALIFORNIA - DEPARTMENT OF TRANSPORTATION

Caltrans

DESIGN

FUNCTIONAL SUPERVISOR: STEWART LEE

CALCULATED-DESIGNED BY: NAZEER BABACARKHIAL

CHECKED BY: STEWART LEE

REVISED BY: NB

DATE REVISED: 2-19-16

LAST REVISION 05-27-16

DATE PLOTTED => 19-SEP-2016

TIME PLOTTED => 13:31

Dist	COUNTY	ROUTE	POST MILES TOTAL PROJECT	SHEET No.	TOTAL SHEETS
04	Son	1	30.5	11	97

REGISTERED CIVIL ENGINEER 2-24-16 DATE

6-27-16
PLANS APPROVAL DATE

REGISTERED PROFESSIONAL ENGINEER
A. Nazeer Babacarkhial
No. 81709
Exp. 3-31-18
CIVIL
STATE OF CALIFORNIA

THE STATE OF CALIFORNIA OR ITS OFFICERS OR AGENTS SHALL NOT BE RESPONSIBLE FOR THE ACCURACY OR COMPLETENESS OF SCANNED COPIES OF THIS PLAN SHEET.

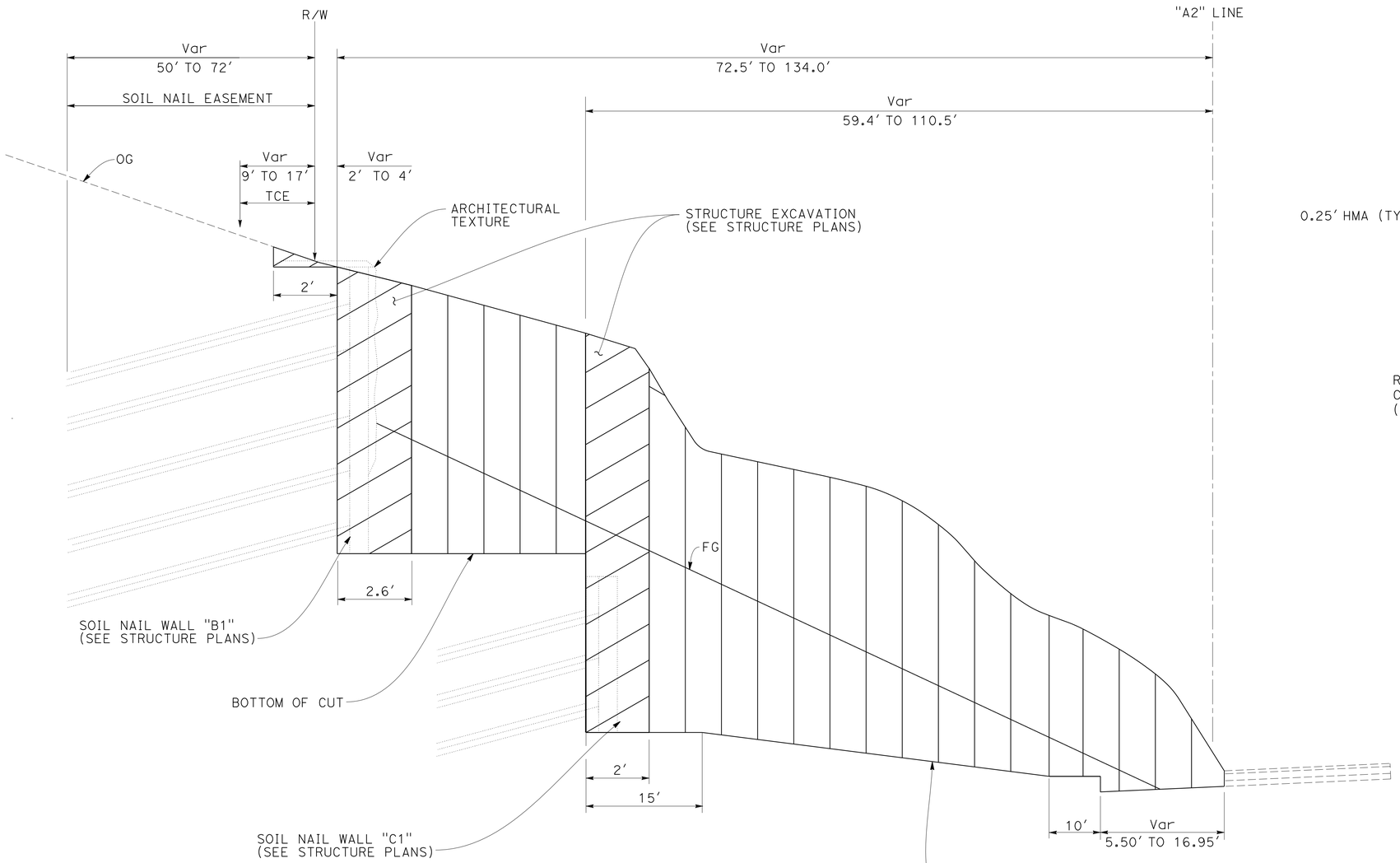

LIMIT OF EXCAVATION

"A2" 4+54.12 TO 7+65.60

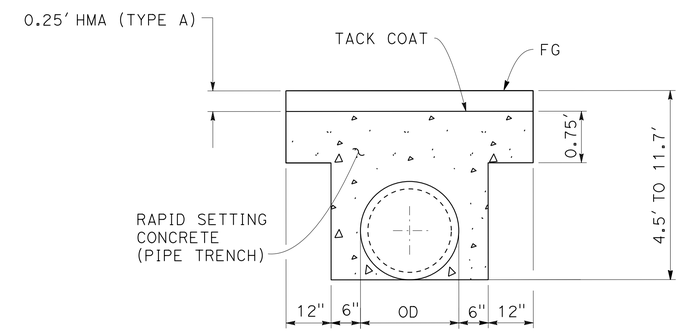

TRENCH BACKFILL DETAIL

2 C

CONSTRUCTION DETAILS

NO SCALE

C-4

STATE OF CALIFORNIA - DEPARTMENT OF TRANSPORTATION
Caltrans
DESIGN

FUNCTIONAL SUPERVISOR: STEWART LEE
CALCULATED-DESIGNED BY: NAZEER BABACARKHIAL
CHECKED BY: STEWART LEE
REVISED BY: NB
DATE REVISED: 2-19-16

LAST REVISION 05-27-16
DATE PLOTTED => 19-SEP-2016
TIME PLOTTED => 13:31

Dist	COUNTY	ROUTE	POST MILES TOTAL PROJECT	SHEET No.	TOTAL SHEETS
04	Son	1	30.5	12	97

REGISTERED CIVIL ENGINEER 6-8-16 DATE

6-27-16
PLANS APPROVAL DATE

REGISTERED PROFESSIONAL ENGINEER Brian J. Rowley No. 68392 Exp. 9-30-17 CIVIL STATE OF CALIFORNIA

THE STATE OF CALIFORNIA OR ITS OFFICERS OR AGENTS SHALL NOT BE RESPONSIBLE FOR THE ACCURACY OR COMPLETENESS OF SCANNED COPIES OF THIS PLAN SHEET.

NOTE:

FOR ACCURATE RIGHT OF WAY DATA, CONTACT RIGHT OF WAY ENGINEERING AT THE DISTRICT OFFICE.

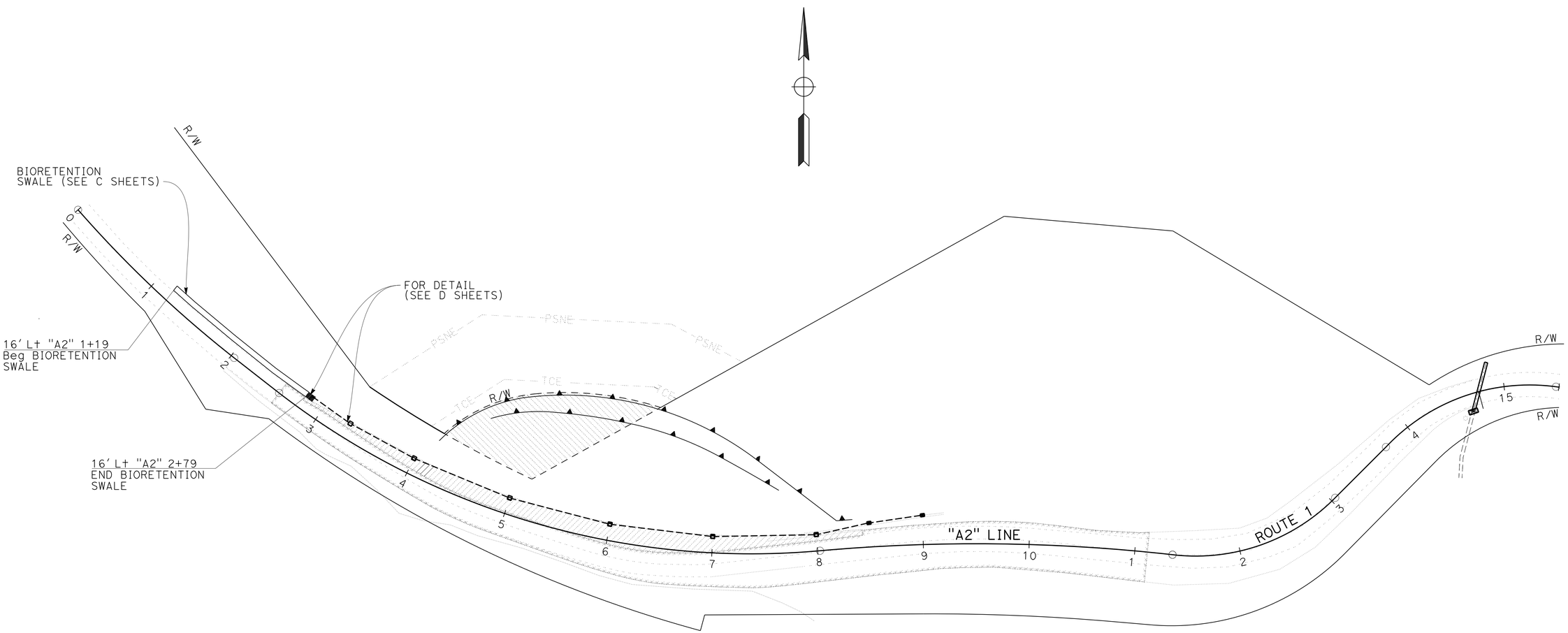

CONSTRUCTION DETAILS
BIORETENTION SWALE
NO SCALE

C-5

REVISED BY	SP
DATE REVISED	2-19-16
CALCULATED-DESIGNED BY	BRIAN ROWLEY
CHECKED BY	NORMAN GONSALVES
FUNCTIONAL SUPERVISOR	HARDEEP TAKHAR

STATE OF CALIFORNIA - DEPARTMENT OF TRANSPORTATION
Caltrans
WATER QUALITY

LAST REVISION 05-27-16
DATE PLOTTED => 19-SEP-2016
TIME PLOTTED => 13:31

Dist	COUNTY	ROUTE	POST MILES TOTAL PROJECT	SHEET No.	TOTAL SHEETS
04	Son	1	30.5	13	97

REGISTERED CIVIL ENGINEER 6-8-16 DATE

6-27-16
PLANS APPROVAL DATE

REGISTERED PROFESSIONAL ENGINEER Brian J. Rowley No. 68392 Exp. 9-30-17 CIVIL STATE OF CALIFORNIA

THE STATE OF CALIFORNIA OR ITS OFFICERS OR AGENTS SHALL NOT BE RESPONSIBLE FOR THE ACCURACY OR COMPLETENESS OF SCANNED COPIES OF THIS PLAN SHEET.

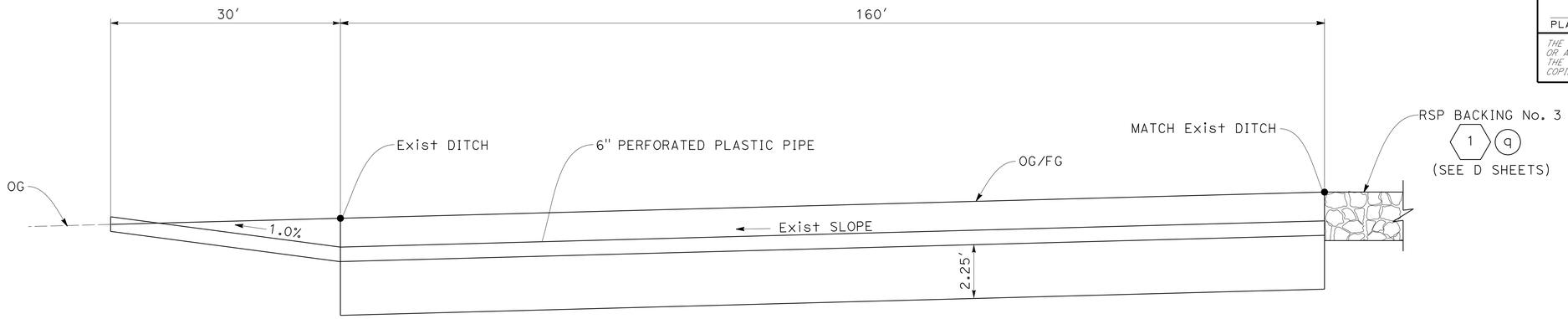

ELEVATION

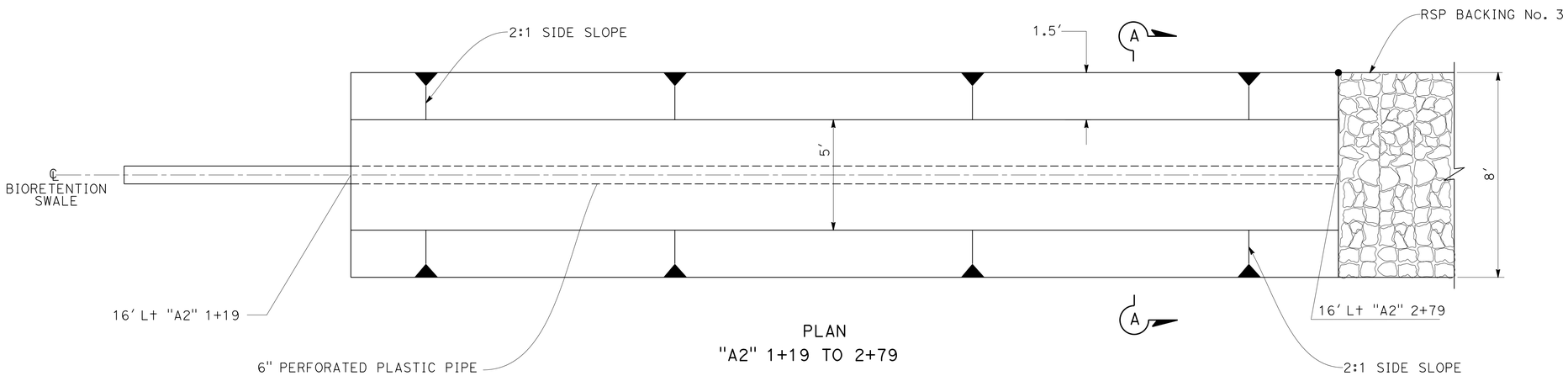

PLAN
"A2" 1+19 TO 2+79

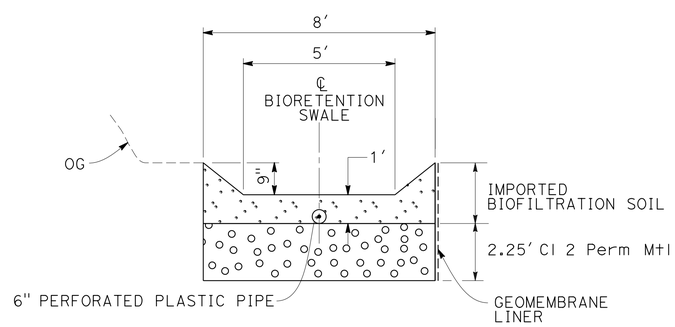

SECTION A-A

BIORETENTION SWALE DETAILS

CONSTRUCTION DETAILS
BIORETENTION SWALE
NO SCALE

C-6

STATE OF CALIFORNIA - DEPARTMENT OF TRANSPORTATION
Caltrans
WATER QUALITY

FUNCTIONAL SUPERVISOR: HARDEEP TAKHAR
CALCULATED-DESIGNED BY: BRIAN ROWLEY
CHECKED BY: NORMAN GONSALVES
REVISED BY: BR
DATE REVISED: 2-19-16

LAST REVISION 05-27-16
DATE PLOTTED => 19-SEP-2016
TIME PLOTTED => 13:31

Dist	COUNTY	ROUTE	POST MILES TOTAL PROJECT	SHEET No.	TOTAL SHEETS
04	Son	1	30.5	14	97

Trang Hoang 2-24-16
REGISTERED CIVIL ENGINEER DATE

6-27-16
PLANS APPROVAL DATE

REGISTERED PROFESSIONAL ENGINEER
Trang T. Hoang
No. 59917
Exp. 12-31-17
CIVIL
STATE OF CALIFORNIA

THE STATE OF CALIFORNIA OR ITS OFFICERS OR AGENTS SHALL NOT BE RESPONSIBLE FOR THE ACCURACY OR COMPLETENESS OF SCANNED COPIES OF THIS PLAN SHEET.

NOTE:

FOR ACCURATE RIGHT OF WAY DATA, CONTACT RIGHT OF WAY ENGINEERING AT THE DISTRICT OFFICE.

LEGEND:

- TEMPORARY HYDRAULIC MULCH (BONDED FIBER MATRIX)
- -xx——xx—— TRSF ——xx— TEMPORARY REINFORCED SILT FENCE (TYPE 1)
- —x——x——x— ESA —x— ENVIRONMENTALLY SENSITIVE AREA
- - - - - - PSNE - - - - - - PERMANENT SOIL NAIL EASEMENT (PSNE)

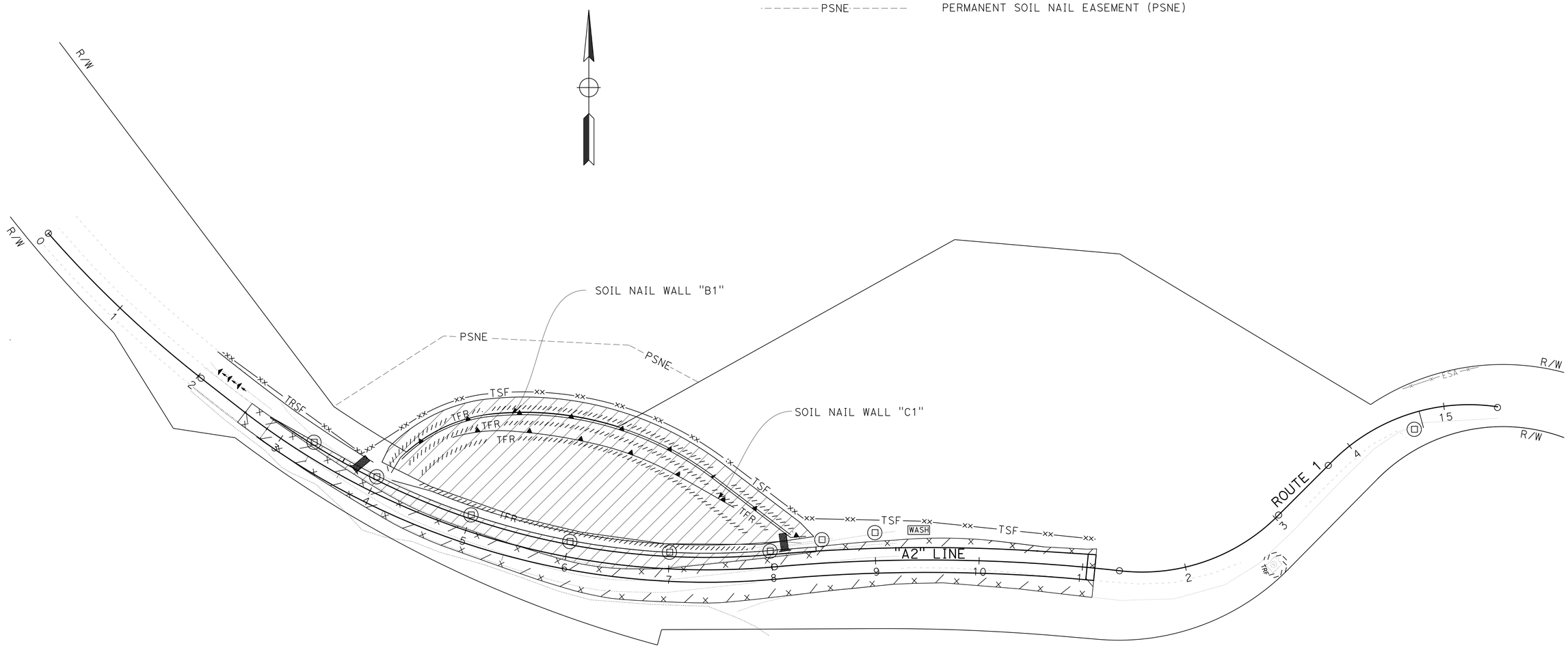

TEMPORARY WATER POLLUTION CONTROL PLAN

SCALE: 1"= 50'

APPROVED FOR TEMPORARY WATER POLLUTION CONTROL WORK ONLY

WPC-1

STATE OF CALIFORNIA - DEPARTMENT OF TRANSPORTATION
Caltrans
WATER QUALITY

FUNCTIONAL SUPERVISOR: KAMRAN NAKHJIRI
CALCULATED-DESIGNED BY: TRANG HOANG
CHECKED BY: KAMRAN NAKHJIRI
REVISED BY: TH
DATE REVISED: 2-19-16

LAST REVISION 05-18-16
DATE PLOTTED => 19-SEP-2016
TIME PLOTTED => 13:31

Dist	COUNTY	ROUTE	POST MILES TOTAL PROJECT	SHEET No.	TOTAL SHEETS
04	Son	1	30.5	15	97

Trang Hoang 2-24-16
REGISTERED CIVIL ENGINEER DATE

6-27-16
PLANS APPROVAL DATE

REGISTERED PROFESSIONAL ENGINEER
Trang T. Hoang
No. 59917
Exp. 12-31-17
CIVIL
STATE OF CALIFORNIA

THE STATE OF CALIFORNIA OR ITS OFFICERS OR AGENTS SHALL NOT BE RESPONSIBLE FOR THE ACCURACY OR COMPLETENESS OF SCANNED COPIES OF THIS PLAN SHEET.

NOTES:

1. EXACT LENGTH AND LOCATION OF COFFERDAM AND PUMP TO BE DETERMINED IN THE FIELD BY THE ENGINEER.
2. USE FLEXIBLE PIPE WITH WATER TIGHT JOINTS.
3. SEE DRAINAGE PLANS FOR SYSTEM No. 2 DETAILS b AND c.

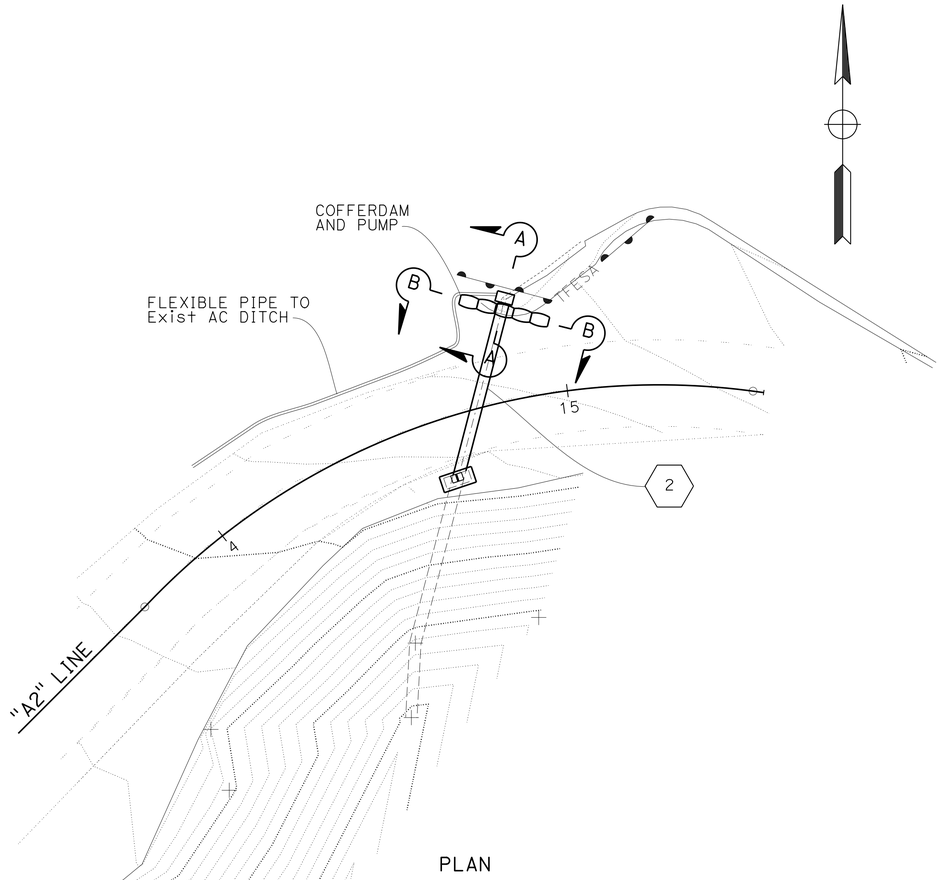

PLAN

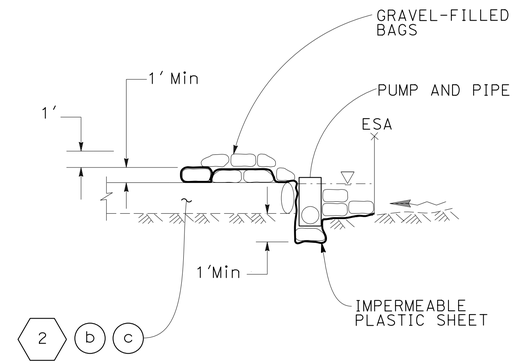

SECTION A-A

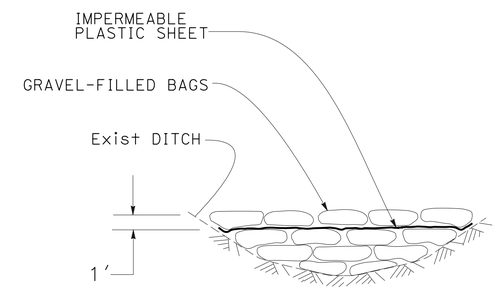

SECTION B-B

COFFERDAM DETAILS

TEMPORARY WATER POLLUTION CONTROL DETAILS
(TEMPORARY WATER DIVERSION SYSTEM)

NO SCALE

WPCD-1

REVISED BY	DATE REVISED
TH	2-19-16

CALCULATED-DESIGNED BY: TRANG HOANG
CHECKED BY: KAMRAN NAKHJIRI
FUNCTIONAL SUPERVISOR: KAMRAN NAKHJIRI

STATE OF CALIFORNIA - DEPARTMENT OF TRANSPORTATION
Caltrans
WATER QUALITY

LAST REVISION 05-27-16 | DATE PLOTTED => 19-SEP-2016 | TIME PLOTTED => 13:31

Dist	COUNTY	ROUTE	POST MILES TOTAL PROJECT	SHEET No.	TOTAL SHEETS
04	Son	1	30.5	16	97

Trang Hoang 2-24-16
REGISTERED CIVIL ENGINEER DATE

6-27-16
PLANS APPROVAL DATE

REGISTERED PROFESSIONAL ENGINEER
Trang T. Hoang
No. 59917
Exp. 12-31-17
CIVIL
STATE OF CALIFORNIA

THE STATE OF CALIFORNIA OR ITS OFFICERS OR AGENTS SHALL NOT BE RESPONSIBLE FOR THE ACCURACY OR COMPLETENESS OF SCANNED COPIES OF THIS PLAN SHEET.

TEMPORARY WATER POLLUTION CONTROL QUANTITIES

STATION	SIDE	HYDRAULIC MULCH (BONDED FIBER MATRIX)	TEMPORARY SILT FENCE	TEMPORARY REINFORCED SILT FENCE	TEMPORARY FIBER ROLL	TEMPORARY CONSTRUCTION ENTRANCE	TEMPORARY CHECK DAM	TEMPORARY DRAINAGE INLET PROTECTION	TEMPORARY WATER DIVERSION SYSTEM
		SQYD	LF			EA	LF	EA	
"A2" 2+00 TO 2+85	Lt						30		
"A2" 2+00 TO 3+75	Lt			175					
"A2" 3+75 TO 11+40	Lt		765						
"A2" 3+30 TO 9+00	Lt							8	
"A2" 3+75	Lt					1			
"A2" 4+00 TO 8+20	Lt	4000			1520				
"A2" 8+20	Lt					1			
"A2" 12+75	Rt				80				1
"A2" 14+65	Rt							1	
TOTAL		4000	765	175	1600	2	30	9	1

TEMPORARY WATER POLLUTION CONTROL QUANTITIES

WPCQ-1

STATE OF CALIFORNIA - DEPARTMENT OF TRANSPORTATION
Caltrans® WATER QUALITY

FUNCTIONAL SUPERVISOR: KAMRAN NAKHJIRI
CALCULATED-DESIGNED BY: TRANG HOANG
CHECKED BY: KAMRAN NAKHJIRI
REVISED BY: TH
DATE REVISED: 2-19-16

LAST REVISION 05-27-16
DATE PLOTTED => 19-SEP-2016
TIME PLOTTED => 13:31

Dist	COUNTY	ROUTE	POST MILES TOTAL PROJECT	SHEET No.	TOTAL SHEETS
04	Son	1	30.5	17	97

REGISTERED CIVIL ENGINEER 3-2-16 DATE

6-27-16
PLANS APPROVAL DATE

REGISTERED PROFESSIONAL ENGINEER
Sharon L. Patch
No. 44896
Exp. 3-31-18
CIVIL
STATE OF CALIFORNIA

THE STATE OF CALIFORNIA OR ITS OFFICERS OR AGENTS SHALL NOT BE RESPONSIBLE FOR THE ACCURACY OR COMPLETENESS OF SCANNED COPIES OF THIS PLAN SHEET.

NOTE:

FOR ACCURATE RIGHT OF WAY DATA, CONTACT
RIGHT OF WAY ENGINEERING AT THE DISTRICT OFFICE.

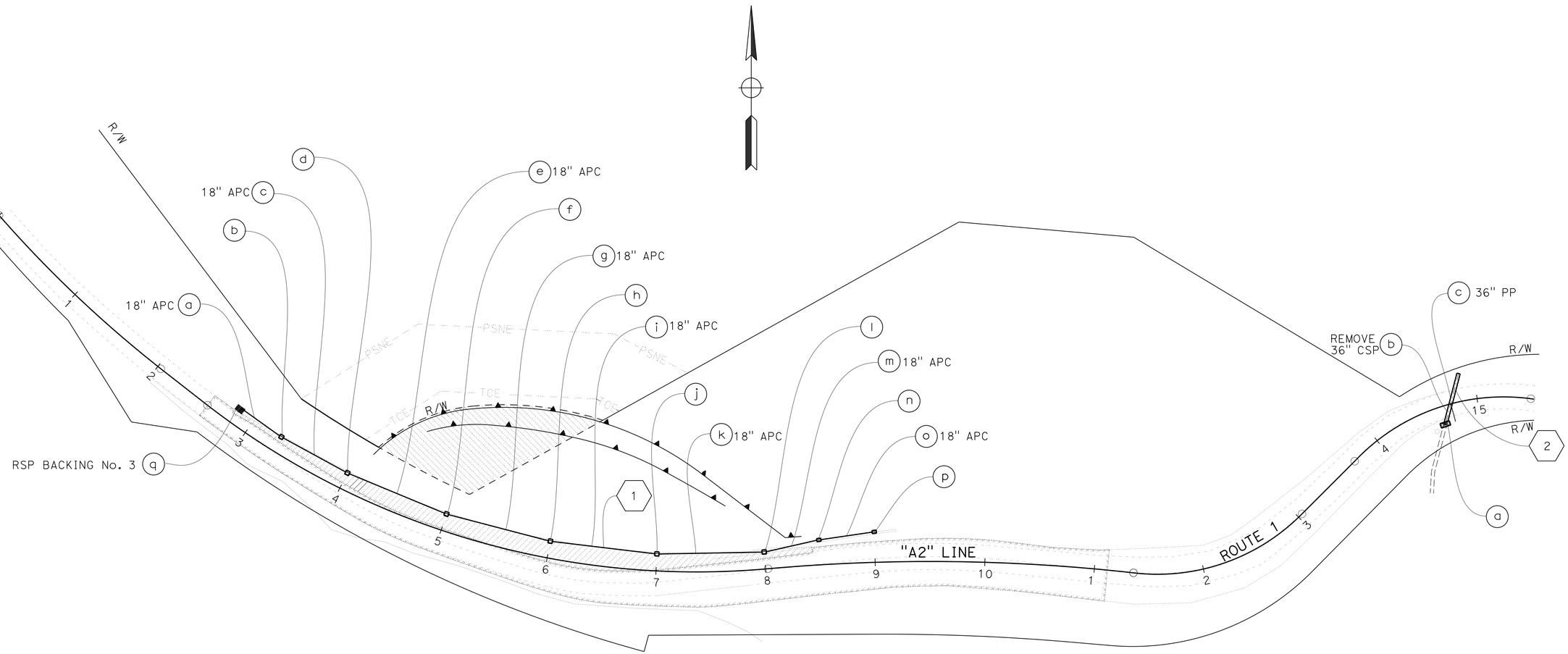

DRAINAGE PLAN

SCALE: 1" = 50'

APPROVED FOR DRAINAGE WORK ONLY

D-1

STATE OF CALIFORNIA - DEPARTMENT OF TRANSPORTATION
Caltrans
HYDRAULICS

FUNCTIONAL SUPERVISOR: JOSEPH PETERSON
CALCULATED-DESIGNED BY: SHARON PATCH
CHECKED BY: CHARLOTTE CASHIN
REVISED BY: SP
DATE REVISED: 2-19-16

LAST REVISION 05-27-16
DATE PLOTTED => 19-SEP-2016
TIME PLOTTED => 13:31

Dist	COUNTY	ROUTE	POST MILES TOTAL PROJECT	SHEET No.	TOTAL SHEETS
04	Son	1	30.5	18	97

REGISTERED CIVIL ENGINEER 2-24-16 DATE

6-27-16
PLANS APPROVAL DATE

REGISTERED PROFESSIONAL ENGINEER
A. Nazeer Babacarkhial
No. 81709
Exp. 3-31-18
CIVIL
STATE OF CALIFORNIA

THE STATE OF CALIFORNIA OR ITS OFFICERS OR AGENTS SHALL NOT BE RESPONSIBLE FOR THE ACCURACY OR COMPLETENESS OF SCANNED COPIES OF THIS PLAN SHEET.

NOTE:

1. FOR INFORMATION NOT SHOWN, SEE SHEET DD-1.

ABBREVIATION:

TG TOP OF GRATE

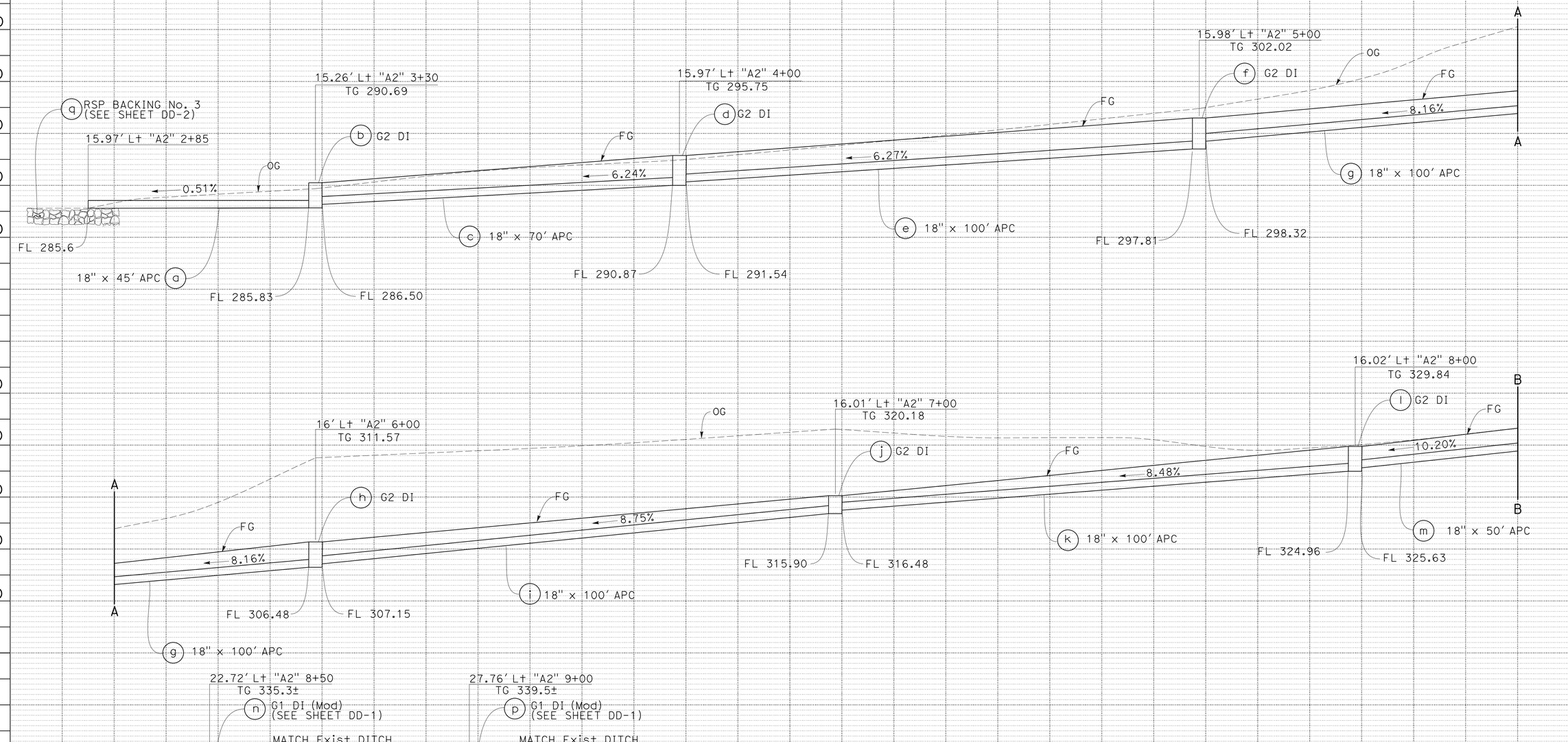

DRAINAGE SYSTEM No. 1

DRAINAGE PROFILES

SCALE: Horiz 1" = 10'
Vert 1" = 10'

DP-1

NB 2-19-16
REVISED BY DATE REVISED
NAZEER BABACARKHIAL STEWART LEE
CALCULATED-DESIGNED BY CHECKED BY
FUNCTIONAL SUPERVISOR STEWART LEE
STATE OF CALIFORNIA - DEPARTMENT OF TRANSPORTATION
Caltrans DESIGN

LAST REVISION 05-18-16 DATE PLOTTED => 19-SEP-2016 TIME PLOTTED => 13:31

Dist	COUNTY	ROUTE	POST MILES TOTAL PROJECT	SHEET No.	TOTAL SHEETS
04	Son	1	30.5	19	97

REGISTERED CIVIL ENGINEER 2-24-16 DATE

6-27-16
PLANS APPROVAL DATE

REGISTERED PROFESSIONAL ENGINEER
A. Nazeer Babacarkhial
No. 81709
Exp. 3-31-18
CIVIL
STATE OF CALIFORNIA

THE STATE OF CALIFORNIA OR ITS OFFICERS OR AGENTS SHALL NOT BE RESPONSIBLE FOR THE ACCURACY OR COMPLETENESS OF SCANNED COPIES OF THIS PLAN SHEET.

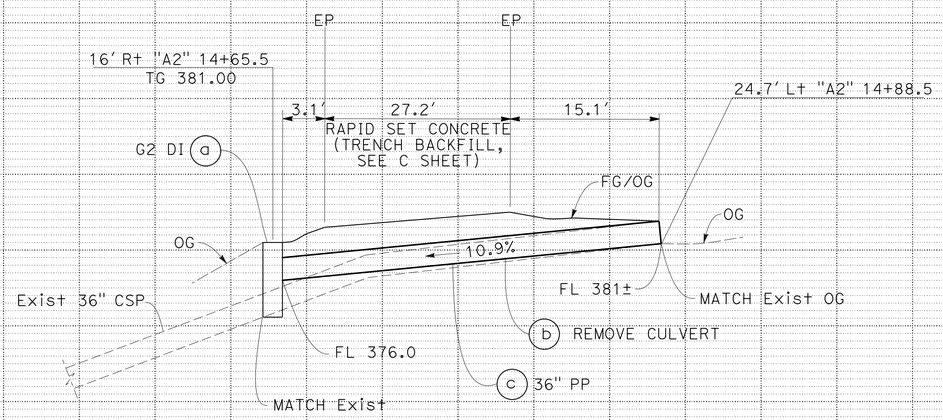

DRAINAGE SYSTEM No. 2

DRAINAGE PROFILES

SCALE: Horiz 1" = 10'
Vert 1" = 10'

DP-2

STATE OF CALIFORNIA - DEPARTMENT OF TRANSPORTATION
Caltrans
DESIGN

FUNCTIONAL SUPERVISOR: STEWART LEE
CALCULATED-DESIGNED BY: NAZEER BABACARKHIAL
CHECKED BY: STEWART LEE
REVISED BY: NB
DATE REVISED: 2-19-16

LAST REVISION 05-18-16
DATE PLOTTED => 19-SEP-2016
TIME PLOTTED => 13:31

Dist	COUNTY	ROUTE	POST MILES TOTAL PROJECT	SHEET No.	TOTAL SHEETS
04	Son	1	30.5	20	97

REGISTERED CIVIL ENGINEER 3-2-16 DATE

6-27-16
PLANS APPROVAL DATE

REGISTERED PROFESSIONAL ENGINEER
Sharon L. Patch
No. 44896
Exp. 3-31-18
CIVIL
STATE OF CALIFORNIA

THE STATE OF CALIFORNIA OR ITS OFFICERS OR AGENTS SHALL NOT BE RESPONSIBLE FOR THE ACCURACY OR COMPLETENESS OF SCANNED COPIES OF THIS PLAN SHEET.

NOTE:

1. FOR INFORMATION NOT SHOWN, SEE RSP D73.

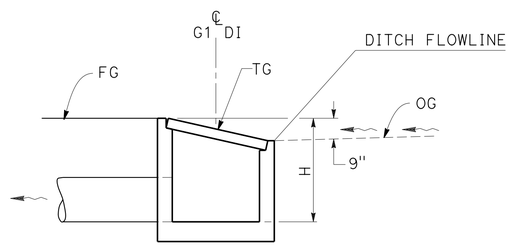

ELEVATION

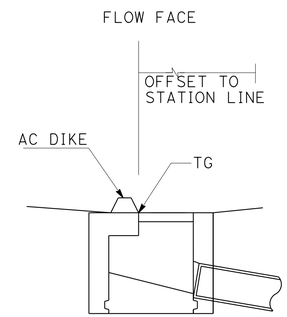

ELEVATION

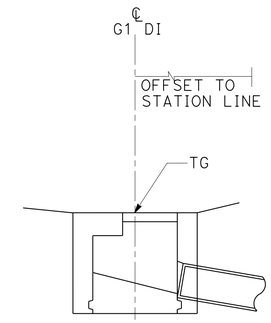

ELEVATION

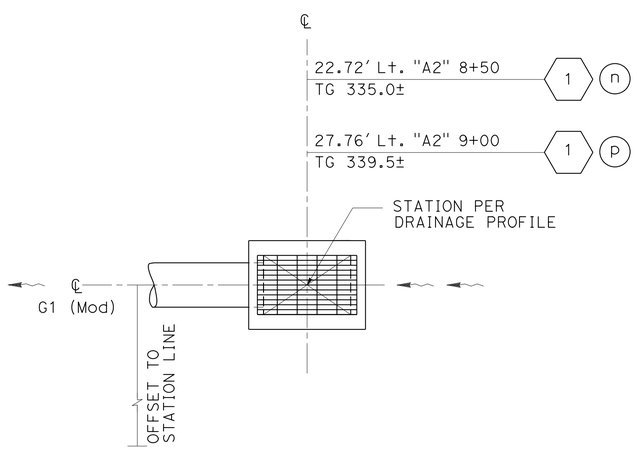

PLAN

G1 DI (Mod)

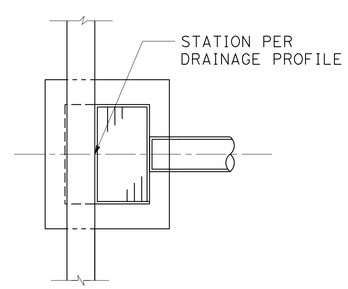

PLAN

INLET ADJACENT TO AC DIKE

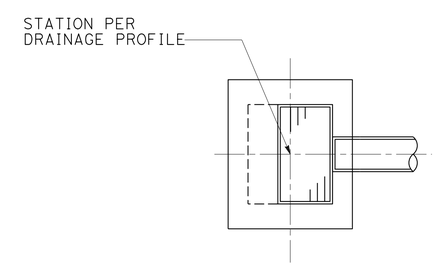

PLAN

FIELD INLET

DRAINAGE DETAILS

NO SCALE

DD-1

REVISED BY	DATE REVISED
SP	2-19-16

SHARON PATCH
CHARLOTTE CASHIN

CALCULATED-DESIGNED BY
CHECKED BY

FUNCTIONAL SUPERVISOR
JOSEPH PETERSON

STATE OF CALIFORNIA - DEPARTMENT OF TRANSPORTATION
Caltrans
HYDRAULICS

LAST REVISION 05-27-16
DATE PLOTTED => 19-SEP-2016
TIME PLOTTED => 13:31

Dist	COUNTY	ROUTE	POST MILES TOTAL PROJECT	SHEET No.	TOTAL SHEETS
04	Son	1	30.5	21	97

REGISTERED CIVIL ENGINEER 3-2-16 DATE

6-27-16
PLANS APPROVAL DATE

REGISTERED PROFESSIONAL ENGINEER Sharon L. Patch No. 44896 Exp. 3-31-18 CIVIL STATE OF CALIFORNIA

THE STATE OF CALIFORNIA OR ITS OFFICERS OR AGENTS SHALL NOT BE RESPONSIBLE FOR THE ACCURACY OR COMPLETENESS OF SCANNED COPIES OF THIS PLAN SHEET.

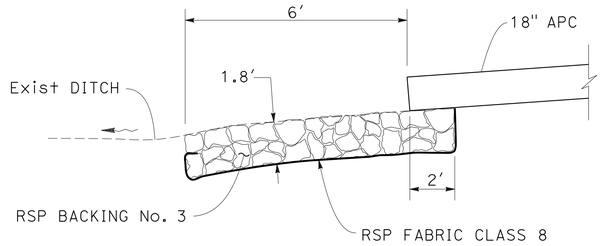

SECTION A-A

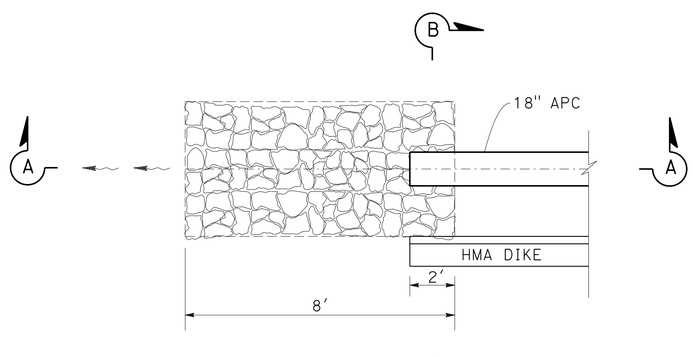

PLAN

1 9

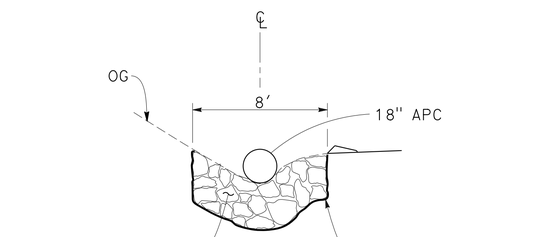

SECTION B-B

RSP AT PIPE OUTFALL

DRAINAGE DETAILS

NO SCALE

DD-2

STATE OF CALIFORNIA - DEPARTMENT OF TRANSPORTATION
Caltrans
HYDRAULICS

FUNCTIONAL SUPERVISOR: JOSEPH PETERSON

CALCULATED-DESIGNED BY: SHARON PATCH
CHECKED BY: CHARLOTTE CASHIN

REVISED BY: SP
DATE REVISED: 2-19-16

LAST REVISION 05-27-16 | DATE PLOTTED => 19-SEP-2016 | TIME PLOTTED => 13:31

Dist	COUNTY	ROUTE	POST MILES TOTAL PROJECT	SHEET No.	TOTAL SHEETS
04	Son	1	30.5	22	97

5-27-16
REGISTERED CIVIL ENGINEER DATE

6-27-16
PLANS APPROVAL DATE

REGISTERED PROFESSIONAL ENGINEER
A. Nazeer Babacarkhial
No. 81709
Exp. 3-31-18
CIVIL
STATE OF CALIFORNIA

THE STATE OF CALIFORNIA OR ITS OFFICERS OR AGENTS SHALL NOT BE RESPONSIBLE FOR THE ACCURACY OR COMPLETENESS OF SCANNED COPIES OF THIS PLAN SHEET.

APC ALLOWABLE MATERIAL AND PROTECTION

PIPE	RCP	PLASTIC PIPE	INTERIOR TYPE
18" APC	18"	18"	SMOOTH

DRAINAGE QUANTITIES

DRAINAGE SHEET No.	DRAINAGE SYSTEM No. ⬡	DRAINAGE UNIT ◯	REMOVE CULVERT	STRUCTURAL CONCRETE, DRAINAGE INLET	RAPID SET CONCRETE (PIPE TRENCH)	Misc IRON AND STEEL	24-12X FRAME AND GRATE (N)	18" APC	36" PLASTIC PIPE	ROCK SLOPE PROTECTION (No. 3, METHOD B)	RSP FABRIC CLASS 8	JOINT CLASSIFICATION (N)	Max COVER (N)	HEIGHT OF INLET (N)	DESCRIPTION	STATION	DRAINAGE SYSTEM No. ⬡	DRAINAGE UNIT ◯
			LF	CY		LB	EA	LF		TON	SQYD	EA	LF	ft				
D-1	1	a						45				S	4		18" APC	15.97' Lt "A2" 2+85 TO 15.26' Lt "A2" 3+30	1	a
		b		2.76		239	1							4.86	G2 DI	15.26' Lt "A2" 3+30		b
		c						70				S	2.8		18" APC	15.26' Lt "A2" 3+30 TO 15.97' Lt "A2" 4+00		c
		d		2.77		239	1							4.88	G2 DI	15.97' Lt "A2" 4+00		d
		e						100				S	3.6		18" APC	15.97' Lt "A2" 4+00 TO 15.98' Lt "A2" 5+00		e
		f		2.50		239	1							4.21	G2 DI	15.98' Lt "A2" 5+00		f
		g						100				S	3.4		18" APC	15.98' Lt "A2" 5+00 TO 16' Lt "A2" 6+00		g
		h		2.86		239	1							5.09	G2 DI	16' Lt "A2" 6+00		h
		i						100				S	2.7		18" APC	16' Lt "A2" 6+00 TO 16.01' Lt "A2" 7+00		i
		j		2.53		239	1							4.28	G2 DI	16.01' Lt "A2" 7+00		j
		k						100				S	3		18" APC	16.01' Lt "A2" 7+00 TO 16.02' Lt "A2" 8+00		k
		l		2.77		239	1							4.88	G2 DI	16.02' Lt "A2" 8+00		l
		m						50				S	2		18" APC	16.02' Lt "A2" 8+00 TO 22.72' Lt "A2" 8+50		m
		n		1.30		239	1							4.57	G1 DI (Mod)	22.72' Lt "A2" 8+50		n
		o						50				S	2.4		18" APC	22.72' Lt "A2" 8+50 TO 27.76' Lt "A2" 9+00		o
		p		0.97		239	1							3.10	G1 DI (Mod)	27.76' Lt "A2" 9+00		p
		q								4.3	7.1				RSP BACKING No. 3	16' Lt "A2" 2+79 TO 15.97' Lt "A2" 2+87		q
	2	a		6.12		239	1							10±	G2 DI	16' Rt "A2" 14+65.5	2	a
		b	49.6												REMOVE CULVERT (36" CSP)	16' Rt "A2" 14+65.5 TO 24.7' Lt 14+88.5		b
		c			18.3				46			S	11.7		36" PP WITH RAPID SET CONCRETE (PIPE TRENCH)	"A2" 14+75.5 TO 24.7' Lt "A2" 14+88.5		c
TOTAL			49.6	24.58	18.3	2151	9	615	46	4.3	7.1							

(N) NOT A SEPARATE PAY ITEM, FOR INFORMATION ONLY

CALCULATED-DESIGNED BY	NAZEER BABACARKHIAL	REVISED BY	NB
CHECKED BY	STEWART LEE	DATE REVISED	2-19-16

FUNCTIONAL SUPERVISOR: STEWART LEE

STATE OF CALIFORNIA - DEPARTMENT OF TRANSPORTATION
Caltrans
DESIGN

DRAINAGE QUANTITIES

DQ-1

LAST REVISION 05-27-16 | DATE PLOTTED => 19-SEP-2016 | TIME PLOTTED => 13:31

Dist	COUNTY	ROUTE	POST MILES TOTAL PROJECT	SHEET No.	TOTAL SHEETS
04	Son	1	30.5	23	97

REGISTERED CIVIL ENGINEER DATE 6-24-16

6-27-16
PLANS APPROVAL DATE

REGISTERED PROFESSIONAL ENGINEER Mohammad Zabolzadeh No. 52953 Exp. 12-31-16 CIVIL STATE OF CALIFORNIA

THE STATE OF CALIFORNIA OR ITS OFFICERS OR AGENTS SHALL NOT BE RESPONSIBLE FOR THE ACCURACY OR COMPLETENESS OF SCANNED COPIES OF THIS PLAN SHEET.

NOTES:

1. THE 6" PVC COUPLER FITTING ANGLE SHOULD BE DETERMINED IN THE FIELD TO ACCOMODATE THE FIELD CONDITION.
2. SEE DRAINAGE SHEETS FOR DETAIL SYSTEMS/ELEMENTS.

UNDERDRAIN QUANTITIES SUMMARY

G2 DI		HMA DIKE (TYPE A)	OUTFALL CONNECTION (SEE STRUCTURE PLANS)				6" NON-PERFORATED PLASTIC PIPE UNDERDRAIN
STATION	OFFSET (Lt)	ELEVATION ft	STATION	OFFSET	ELEVATION	OUTFALL	LF
"A2" 4+00	15.97′	296.25	4+14.67	40.76′	303.60±	B1.1	28.8
"A2" 5+00	15.98′	302.52	4+66.25	86.25′	310.78±	C1.1	77.5
"A2" 6+00	16.00′	312.07	7+31.25	77.50′	328.00±	C1.2	137.5
"A2" 7+00	16.01′	320.68	7+95	95.00′	329.16±	B1.2	96.2
TOTAL							340.0

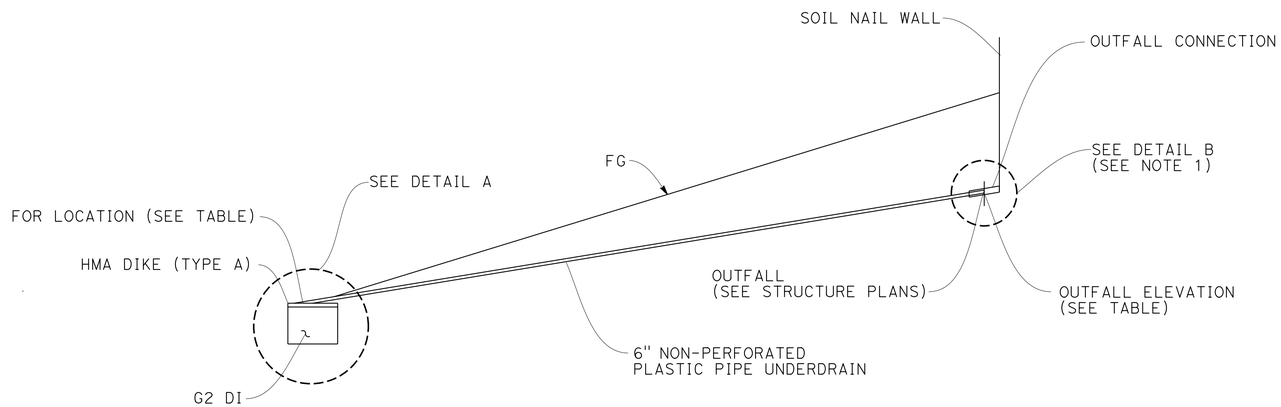

ELEVATION

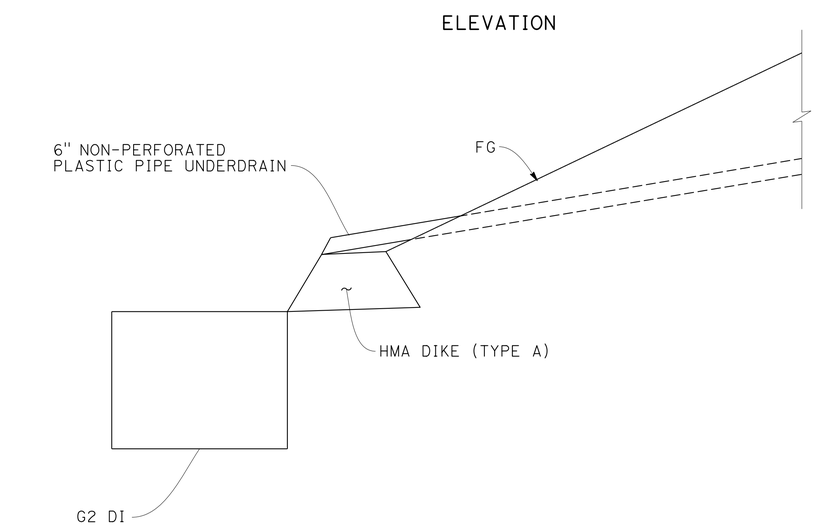

DETAIL A

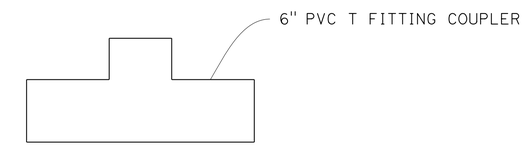

ELEVATION

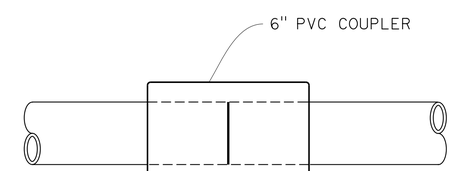

PLAN

DETAIL B

SUBSURFACE DRAINS
UNDERDRAINS

NO SCALE

SB-1

STATE OF CALIFORNIA - DEPARTMENT OF TRANSPORTATION
Caltrans
GEOTECHNICAL

FUNCTIONAL SUPERVISOR: HOOSHMAND NIKOUI-G
CALCULATED-DESIGNED BY: MOHAMMAD ZABOLZADEH
CHECKED BY: ALI KADDOURA
REVISED BY: MZ
DATE REVISED: 2-19-16

LAST REVISION 05-27-16 | DATE PLOTTED => 19-SEP-2016 | TIME PLOTTED => 13:31

Dist	COUNTY	ROUTE	POST MILES TOTAL PROJECT	SHEET No.	TOTAL SHEETS
04	Son	1	30.5	24	97

Rajesh Oberoi 2-26-16
REGISTERED CIVIL ENGINEER DATE

6-27-16
PLANS APPROVAL DATE

REGISTERED PROFESSIONAL ENGINEER Rajesh Oberoi No. 46046 Exp. 12-31-16 CIVIL STATE OF CALIFORNIA

THE STATE OF CALIFORNIA OR ITS OFFICERS OR AGENTS SHALL NOT BE RESPONSIBLE FOR THE ACCURACY OR COMPLETENESS OF SCANNED COPIES OF THIS PLAN SHEET.

NOTE:

1. EXACT LOCATION AND POSITION OF CONSTRUCTION AREA SIGNS TO BE DETERMINED BY THE ENGINEER.

LEGEND:

CONSTRUCTION AREA SIGN LETTER

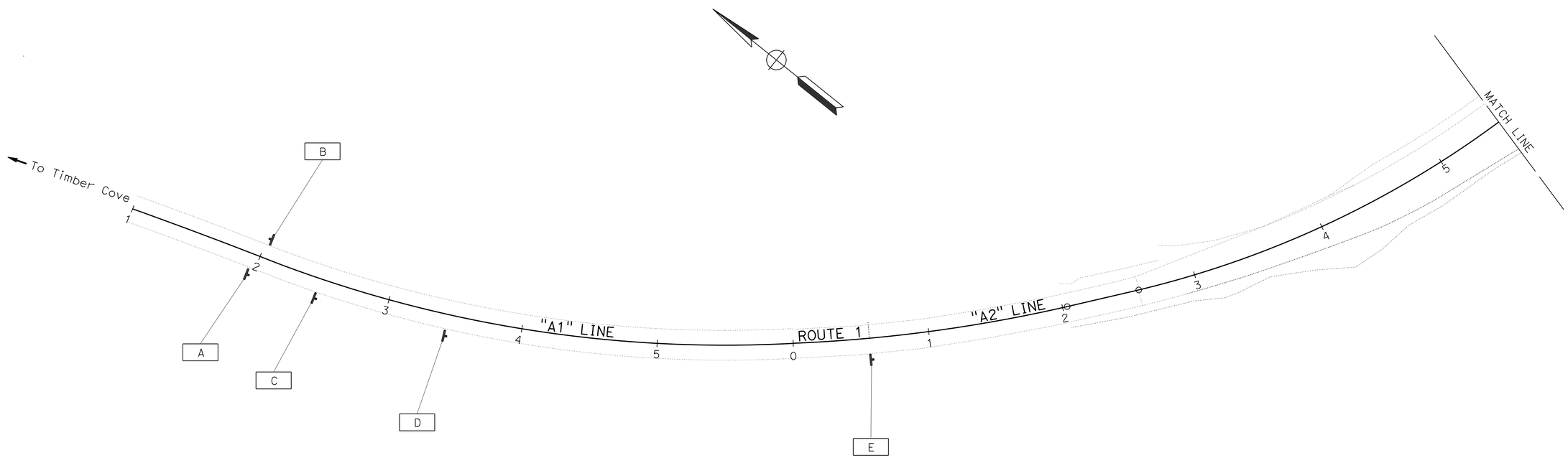

APPROVED FOR CONSTRUCTION AREA SIGN WORK ONLY

CONSTRUCTION AREA SIGNS

NO SCALE

CS-1

REVISED BY	DATE REVISED
RO	2-19-16

HENRY TAM — RAJESH OBEROI

CALCULATED-DESIGNED BY / CHECKED BY

FUNCTIONAL SUPERVISOR: ROLAND AU-YEUNG

STATE OF CALIFORNIA - DEPARTMENT OF TRANSPORTATION

Caltrans® TRAFFIC

LAST REVISION 05-18-16 | DATE PLOTTED => 19-SEP-2016 | TIME PLOTTED => 13:31

Dist	COUNTY	ROUTE	POST MILES TOTAL PROJECT	SHEET No.	TOTAL SHEETS
04	Son	1	30.5	25	97

Rajesh Oberoi 2-26-16
REGISTERED CIVIL ENGINEER DATE

6-27-16
PLANS APPROVAL DATE

REGISTERED PROFESSIONAL ENGINEER Rajesh Oberoi No. 46046 Exp. 12-31-16 CIVIL STATE OF CALIFORNIA

THE STATE OF CALIFORNIA OR ITS OFFICERS OR AGENTS SHALL NOT BE RESPONSIBLE FOR THE ACCURACY OR COMPLETENESS OF SCANNED COPIES OF THIS PLAN SHEET.

STATIONARY MOUNTED CONSTRUCTION AREA SIGNS

SIGN No.	MUTCD CODE	MESSAGE	PANEL SIZE	NUMBER OF POSTS AND SIZE	NUMBER OF SIGNS	REMARKS
A	W20-1	ROAD WORK AHEAD	48" x 48"	1 - 4" x 6"	2	
B	G20-2	END ROAD WORK	36" x 18"	1 - 4" x 4"	2	
C	W20-4	ONE LANE ROAD AHEAD	36" x 36"	1 - 4" x 4"	2	
D	W3-3	SIGNAL AHEAD	36" x 36"		2	INSTALL ON Temp FLASHING BEACON, SEE SHEET E-5, DETAIL 1.
E	R10-6(L+)	STOP HERE ON RED	24" x 36"		2	INSTALL ON Temp SIGNAL SYSTEM, SEE SHEET E-6, DETAIL 9.
	R10-24	(BICYCLE) PUSH BUTTON FOR GREEN LIGHT	9" x 15"			

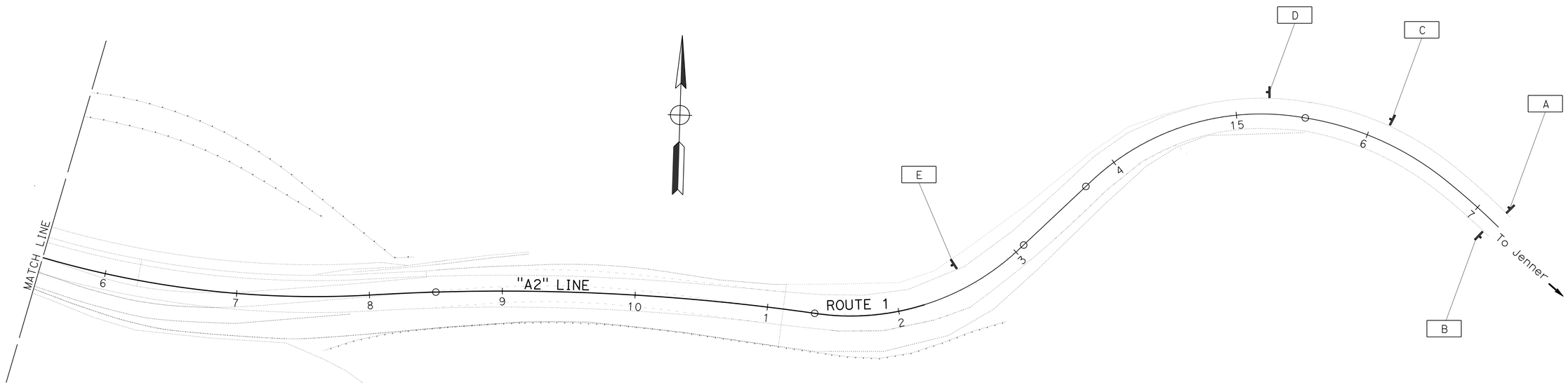

APPROVED FOR CONSTRUCTION AREA SIGN WORK ONLY

FOR NOTE AND LEGEND, SEE SHEET CS-1

CONSTRUCTION AREA SIGNS

NO SCALE

CS-2

STATE OF CALIFORNIA - DEPARTMENT OF TRANSPORTATION
Caltrans
TRAFFIC

FUNCTIONAL SUPERVISOR: ROLAND AU-YEUNG
CALCULATED-DESIGNED BY: HENRY TAM
CHECKED BY: RAJESH OBEROI
REVISED BY: RO
DATE REVISED: 2-19-16

LAST REVISION 05-18-16
DATE PLOTTED => 19-SEP-2016
TIME PLOTTED => 13:31

Dist	COUNTY	ROUTE	POST MILES TOTAL PROJECT	SHEET No.	TOTAL SHEETS
04	Son	1	30.5	26	97

REGISTERED CIVIL ENGINEER 2-24-16 DATE

6-27-16
PLANS APPROVAL DATE

REGISTERED PROFESSIONAL ENGINEER A. Nazeer Babacarkhial No. 81709 Exp. 3-31-18 CIVIL STATE OF CALIFORNIA

THE STATE OF CALIFORNIA OR ITS OFFICERS OR AGENTS SHALL NOT BE RESPONSIBLE FOR THE ACCURACY OR COMPLETENESS OF SCANNED COPIES OF THIS PLAN SHEET.

NOTE:

FOR ACCURATE RIGHT OF WAY DATA, CONTACT RIGHT OF WAY ENGINEERING AT THE DISTRICT OFFICE.

NOTE:

1. EXACT LOCATION OF THE SIGNS TO BE DETERMINED BY THE ENGINEER.

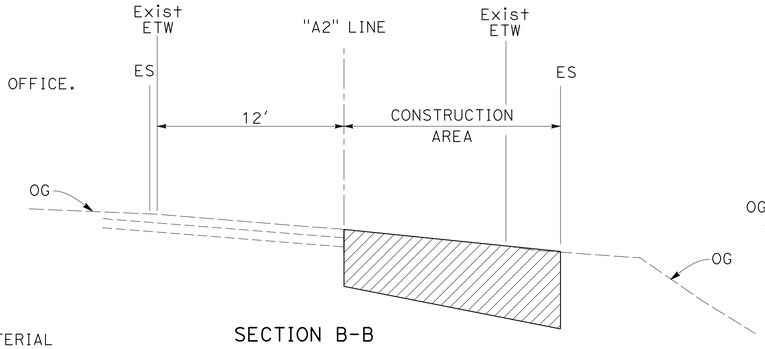

SECTION B-B

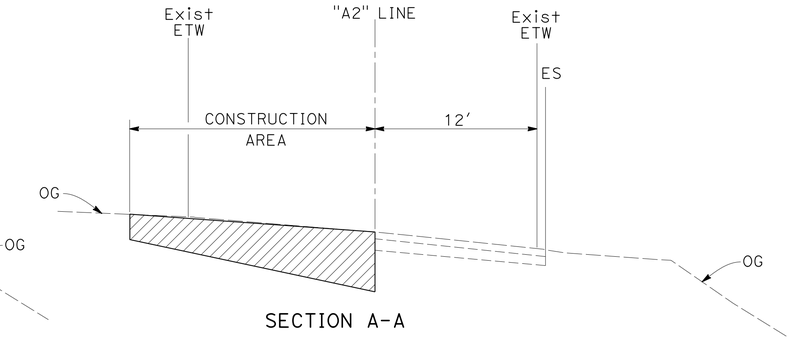

SECTION A-A

LEGEND:

- AREA STORE SELECTED MATERIAL
- CONSTRUCTION THIS STAGE
- 0.15' COLD PLANE AC PAVEMENT AND RESURFACING
- • CHANNELIZERS (SURFACE MOUNTED)

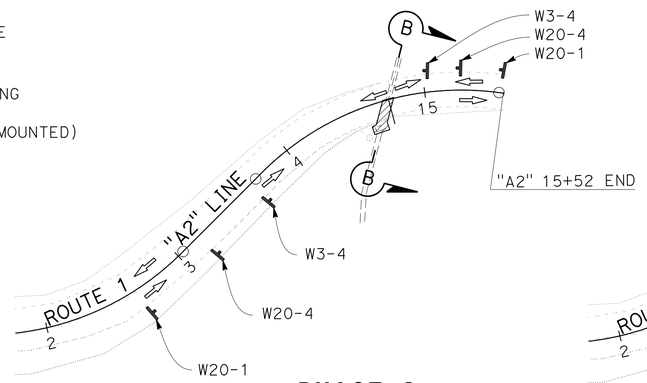

PHASE 2
"A2" 14+65
NO SCALE

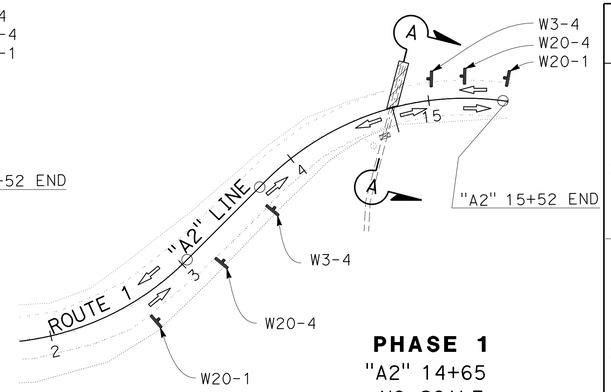

PHASE 1
"A2" 14+65
NO SCALE

CONSTRUCTION	TRAFFIC HANDLING
PHASE 1: 1. INSTALL AUTHORIZED TEMPORARY WATER DIVERSION BEFORE DRAINAGE WORK (SEE WPCD SHEETS). ALLOWED PERIOD IS JUNE 15 AND OCTOBER 15. 2. NB ROUTE 1: INSTALL DRAINAGE SYSTEM (2) (PORTION): B (PORTION), AND C (PORTION), ACROSS NB-1 (SEE DRAINAGE PLANS), INCLUDING PLACING HMA (TYPE A), AND RSC FOR DRAINAGE TRENCH AS SHOWN.	PROVIDE TRAFFIC CONTROL PER LANE CLOSURE CHARTS
PHASE 2: 1. SB ROUTE 1: INSTALL THE REMAINING DRAINAGE SYSTEM (2) ACROSS SB-1 (SEE DRAINAGE PLANS), INCLUDING PLACING HMA (TYPE A), AND RSC FOR DRAINAGE TRENCH AS SHOWN. 2. REMOVE TEMPORARY WATER DIVERSION WHEN NO LONGER REQUIRED. ALLOWED PERIOD IS JUNE 15 AND OCTOBER 15.	PROVIDE TRAFFIC CONTROL PER LANE CLOSURE CHARTS

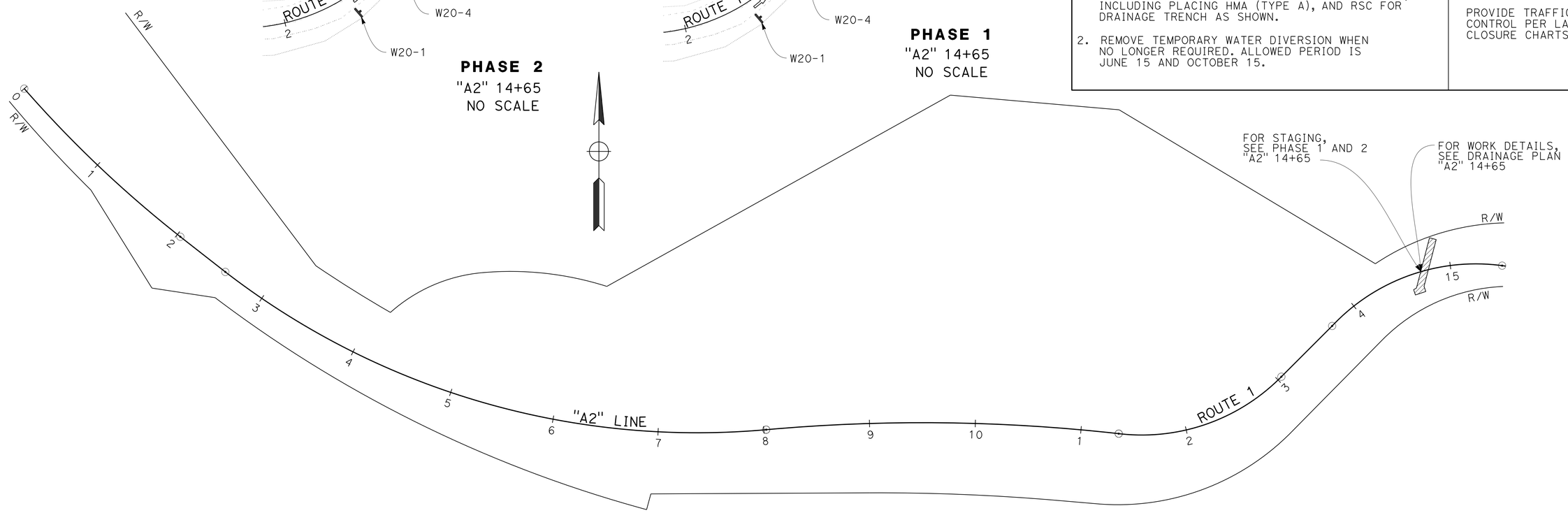

STAGE CONSTRUCTION AND TRAFFIC HANDLING PLAN

STAGE 1

SCALE: 1" = 50'

APPROVED FOR STAGE CONSTRUCTION AND TRAFFIC HANDLING WORK ONLY

SC-1

STATE OF CALIFORNIA - DEPARTMENT OF TRANSPORTATION
Caltrans
DESIGN

FUNCTIONAL SUPERVISOR: STEWART LEE

CALCULATED-DESIGNED BY: NAZEER BABACARKHIAL
CHECKED BY: STEWART LEE

REVISED BY: NB
DATE REVISED: 2-19-16

LAST REVISION 05-27-16
DATE PLOTTED => 19-SEP-2016
TIME PLOTTED => 13:31

Dist	COUNTY	ROUTE	POST MILES TOTAL PROJECT	SHEET No.	TOTAL SHEETS
04	Son	1	30.5	27	97

REGISTERED CIVIL ENGINEER 2-24-16 DATE

6-27-16
PLANS APPROVAL DATE

REGISTERED PROFESSIONAL ENGINEER
A. Nazeer Babacarkhial
No. 81709
Exp. 3-31-18
CIVIL
STATE OF CALIFORNIA

THE STATE OF CALIFORNIA OR ITS OFFICERS OR AGENTS SHALL NOT BE RESPONSIBLE FOR THE ACCURACY OR COMPLETENESS OF SCANNED COPIES OF THIS PLAN SHEET.

NOTE:

FOR ACCURATE RIGHT OF WAY DATA, CONTACT RIGHT OF WAY ENGINEERING AT THE DISTRICT OFFICE.

CONSTRUCTION	TRAFFIC HANDLING
1. INSTALL TEMPORARY RAILING (TYPE K)	PROVIDE TRAFFIC CONTROL PER LANE CLOSURE CHARTS
2. INSTALL TEMPORARY SIGNAL, INCLUDING ELECTRICAL SYSTEM TEMPORARY GENERATOR, TEMPORARY FENCE AND GATE (TYPE CL-6)	PROVIDE TRAFFIC CONTROL PER LANE CLOSURE CHARTS
3. CONSTRUCT SOIL NAIL WALLS AND ROADWAY WIDENING	PROVIDE TRAFFIC CONTROL PER Temp SIGNAL SYSTEM 24/7

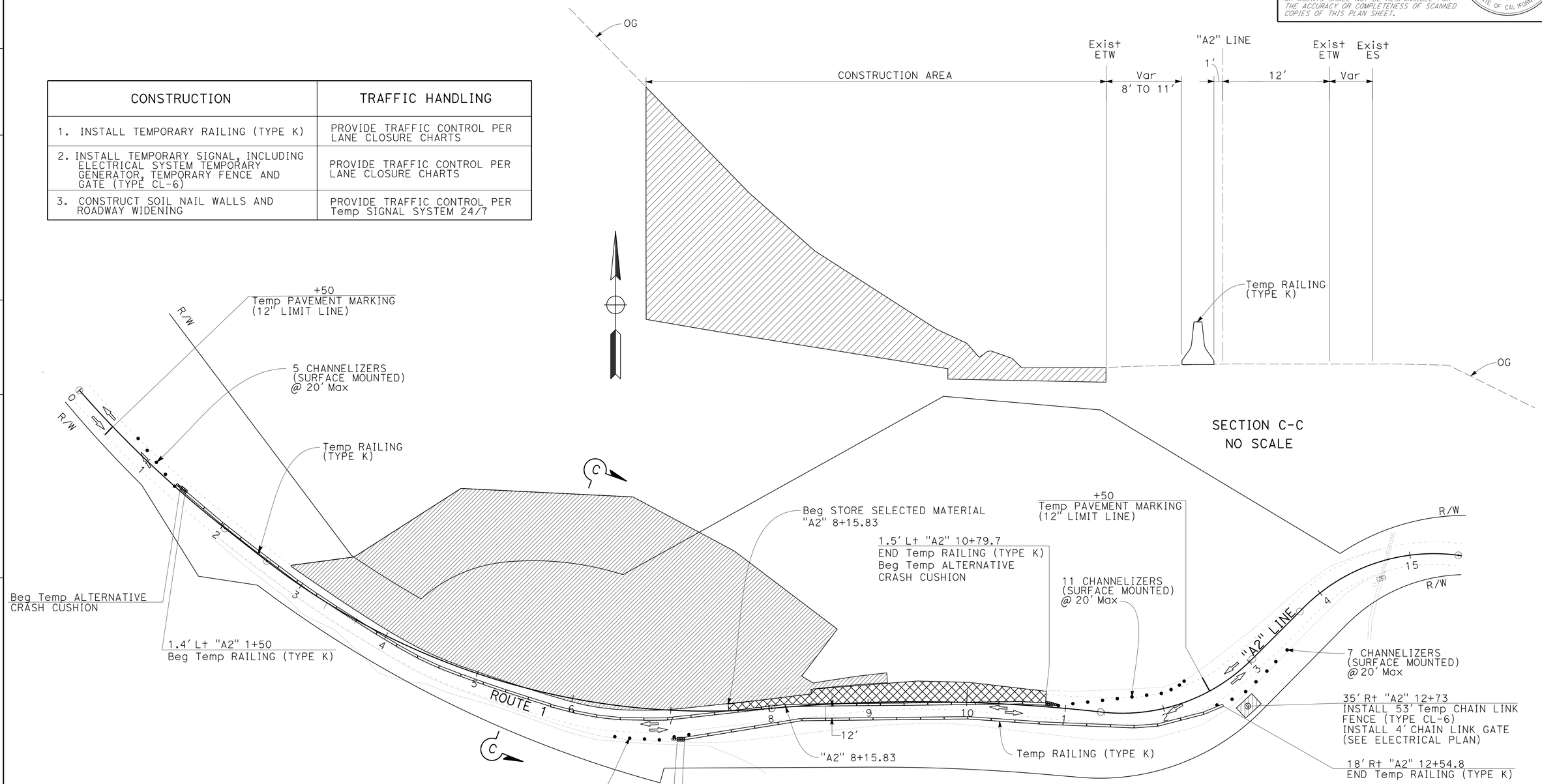

STAGE CONSTRUCTION AND TRAFFIC HANDLING PLAN

STAGE 2

SCALE: 1" = 50'

APPROVED FOR STAGE CONSTRUCTION AND TRAFFIC HANDLING WORK ONLY

FOR NOTE AND LEGEND, SEE SHEET SC-1

SC-2

REVISED BY	DATE REVISED
NB	2-19-16

CALCULATED-DESIGNED BY: NAZEER BABACARKHIAL
CHECKED BY: STEWART LEE
FUNCTIONAL SUPERVISOR: STEWART LEE

STATE OF CALIFORNIA - DEPARTMENT OF TRANSPORTATION
Caltrans
DESIGN

LAST REVISION 05-27-16
DATE PLOTTED => 19-SEP-2016
TIME PLOTTED => 13:31

Dist	COUNTY	ROUTE	POST MILES TOTAL PROJECT	SHEET No.	TOTAL SHEETS
04	Son	1	30.5	28	97

REGISTERED CIVIL ENGINEER 2-24-16 DATE

6-27-16
PLANS APPROVAL DATE

REGISTERED PROFESSIONAL ENGINEER
A. Nazeer Babacarkhial
No. 81709
Exp. 3-31-18
CIVIL
STATE OF CALIFORNIA

THE STATE OF CALIFORNIA OR ITS OFFICERS OR AGENTS SHALL NOT BE RESPONSIBLE FOR THE ACCURACY OR COMPLETENESS OF SCANNED COPIES OF THIS PLAN SHEET.

NOTE:

FOR ACCURATE RIGHT OF WAY DATA, CONTACT RIGHT OF WAY ENGINEERING AT THE DISTRICT OFFICE.

CONSTRUCTION	TRAFFIC HANDLING
1. REMOVE TEMPORARY RAILING (TYPE K) AND TEMPORARY CRASH CUSHION	PROVIDE TRAFFIC CONTROL PER LANE CLOSURE CHARTS
2. REMOVE TEMPORARY SIGNAL, INCLUDING ELECTRICAL SYSTEM TEMPORARY GENERATOR, TEMPORARY FENCE AND GATE (TYPE CL-6)	PROVIDE TRAFFIC CONTROL PER LANE CLOSURE CHARTS
3. COLD PLANE AC PAVEMENT, AND PLACE RHMA (GAP GRADED)	PROVIDE TRAFFIC CONTROL PER LANE CLOSURE CHARTS

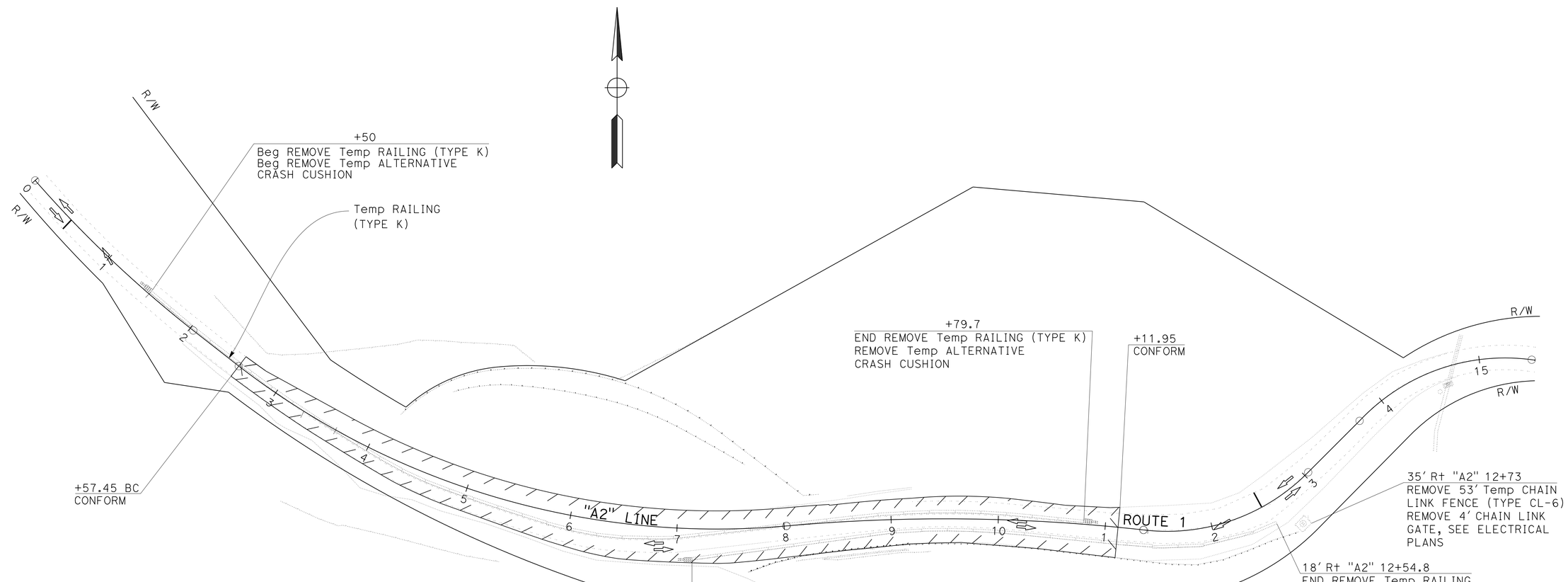

STAGE CONSTRUCTION AND TRAFFIC HANDLING PLAN

STAGE 3

SCALE: 1" = 50'

APPROVED FOR STAGE CONSTRUCTION AND TRAFFIC HANDLING WORK ONLY

FOR NOTE AND LEGEND, SEE SHEET SC-1

SC-3

STATE OF CALIFORNIA - DEPARTMENT OF TRANSPORTATION
Caltrans
DESIGN

FUNCTIONAL SUPERVISOR: STEWART LEE
CALCULATED-DESIGNED BY: NAZEER BABACARKHIAL
CHECKED BY: STEWART LEE
REVISED BY: NB
DATE REVISED: 2-19-16

LAST REVISION 05-27-16
DATE PLOTTED => 19-SEP-2016
TIME PLOTTED => 13:31

Dist	COUNTY	ROUTE	POST MILES TOTAL PROJECT	SHEET No.	TOTAL SHEETS
04	Son	1	30.5	29	97

REGISTERED CIVIL ENGINEER 2-24-16 DATE

6-27-16
PLANS APPROVAL DATE

REGISTERED PROFESSIONAL ENGINEER A. Nazeer Babacarkhial No. 81709 Exp. 3-31-18 CIVIL STATE OF CALIFORNIA

THE STATE OF CALIFORNIA OR ITS OFFICERS OR AGENTS SHALL NOT BE RESPONSIBLE FOR THE ACCURACY OR COMPLETENESS OF SCANNED COPIES OF THIS PLAN SHEET.

TEMPORARY PAVEMENT DELINEATION

SHEET No.	DIRECTION	STATION	DETAIL No.	PAVEMENT MARKING (PAINT)
				SQFT
SC-2	NB	"A2" 12+50	12" SOLID WHITE	12
	SB	"A2" 0+50	12" SOLID WHITE	12
TOTAL				24

CHANNELIZERS (SURFACE MOUNTED)

SHEET No.	DIRECTION	STATION	EA
SC-2	NB	"A2" 1+50	5
	SB	"A2" 6+20	6
	NB	"A2" 10+50	11
	SB	"A2" 10+40	7
TOTAL			29

TEMPORARY ALTERNATIVE CRASH CUSHION

DIRECTION	STATION	EA
NB	"A2" 10+79.7	1
NB	"A2" 1+50	1
SB	"A2" 7+14.8	1
TOTAL		3

TEMPORARY RAILING (TYPE K)

STATION	LF
"A2" 1+50 TO 10+79.7	929.7
"A2" 7+14.8 TO 12+54.8	540
TOTAL	1469.7

TEMPORARY FENCE AND GATE

SHEET No.	STATION	Temp FENCE (TYPE CL-6)	4' Temp CHAIN LINK GATE (TYPE CL-6)
		LF	EA
SC-2, E-4	"A2" 13+60	53	1
TOTAL		53	1

STAGE CONSTRUCTION QUANTITIES

SCQ-1

STATE OF CALIFORNIA - DEPARTMENT OF TRANSPORTATION
Caltrans® DESIGN

FUNCTIONAL SUPERVISOR: STEWART LEE
CALCULATED-DESIGNED BY: NAZEER BABACARKHIAL
CHECKED BY: STEWART LEE
REVISED BY: NB
DATE REVISED: 2-19-16

LAST REVISION 05-27-16 | DATE PLOTTED => 19-SEP-2016 | TIME PLOTTED => 13:31

Dist	COUNTY	ROUTE	POST MILES TOTAL PROJECT	SHEET No.	TOTAL SHEETS
04	Son	1	30.5	30	97

REGISTERED CIVIL ENGINEER DATE 4-12-16

6-27-16
PLANS APPROVAL DATE

REGISTERED PROFESSIONAL ENGINEER
Yat Sin T. Kwok
No. 60564
Exp. 12-31-16
CIVIL
STATE OF CALIFORNIA

THE STATE OF CALIFORNIA OR ITS OFFICERS OR AGENTS SHALL NOT BE RESPONSIBLE FOR THE ACCURACY OR COMPLETENESS OF SCANNED COPIES OF THIS PLAN SHEET.

NOTE:

FOR ACCURATE RIGHT OF WAY DATA, CONTACT
RIGHT OF WAY ENGINEERING AT THE DISTRICT OFFICE.

TRAFFIC STRIPES, PAVEMENT MARKINGS AND PAVEMENT MARKERS

SHEET No.	STATION	DETAIL No.	THERMOPLASTIC TRAFFIC STRIPE (ENHANCED WET NIGHT VISIBILITY) 4" YELLOW	4" WHITE	PAVEMENT MARKER RETROREFLECTIVE (TYPE D)
			LF		EA
PD-1	"A2" 2+57.45 TO 11+11.95	22	1710		74
		27B		1468	
SUBTOTAL			1710	1468	74
TOTAL			3178		74

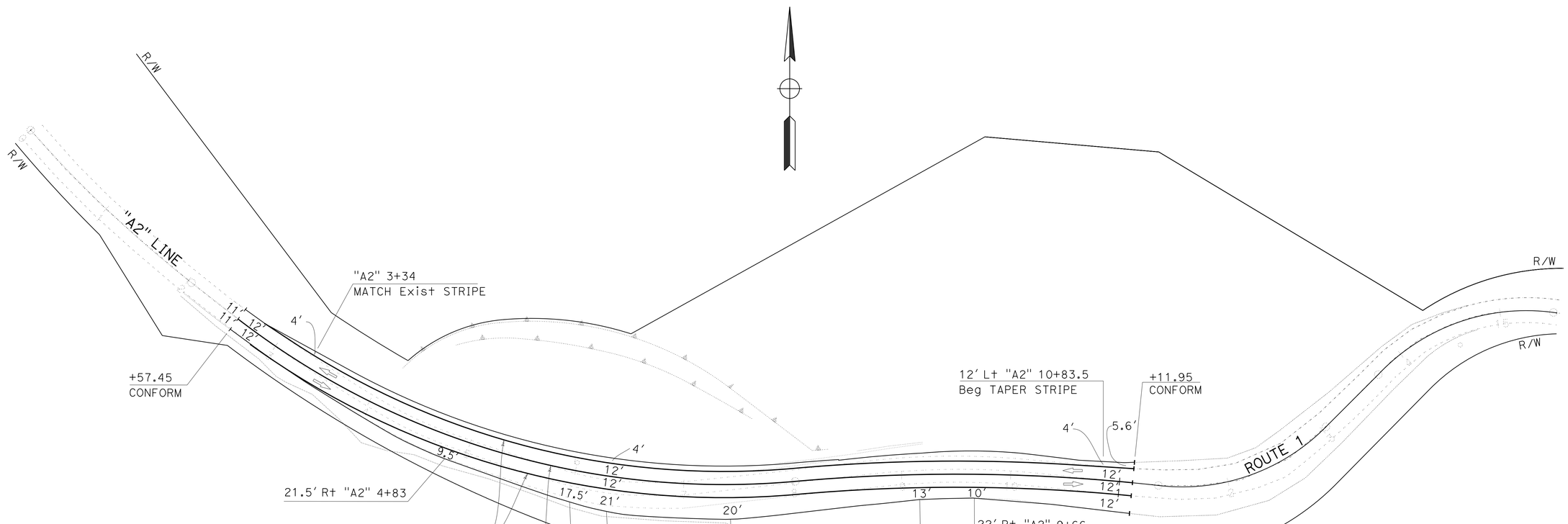

PAVEMENT DELINEATION PLAN

SCALE: 1" = 50'

APPROVED FOR PAVEMENT DELINEATION WORK ONLY

PD-1

STATE OF CALIFORNIA - DEPARTMENT OF TRANSPORTATION
Caltrans
TRAFFIC

FUNCTIONAL SUPERVISOR: PHILLIPE VAN
CALCULATED-DESIGNED BY: YAT SIN T. KWOK
CHECKED BY: PHILLIPE VAN
REVISED BY: NB
DATE REVISED: 2-19-16

LAST REVISION 05-27-16
DATE PLOTTED => 19-SEP-2016
TIME PLOTTED => 13:31

Dist	COUNTY	ROUTE	POST MILES TOTAL PROJECT	SHEET No.	TOTAL SHEETS
04	Son	1	30.5	31	97

REGISTERED CIVIL ENGINEER 2-24-16 DATE

6-27-16
PLANS APPROVAL DATE

REGISTERED PROFESSIONAL ENGINEER A. Nazeer Babacarkhial No. 81709 Exp. 3-31-18 CIVIL STATE OF CALIFORNIA

THE STATE OF CALIFORNIA OR ITS OFFICERS OR AGENTS SHALL NOT BE RESPONSIBLE FOR THE ACCURACY OR COMPLETENESS OF SCANNED COPIES OF THIS PLAN SHEET.

EARTHWORK QUANTITIES SUMMARY

SHEET No.	STATION	ROADWAY EXCAVATION	(N) EMBANKMENT	SELECTED MATERIAL (TOP SOIL) (N)	IMPORTED BORROW	SHOULDER BACKING
		CY				TON
L-1	"A2" 2+57.45 TO 11+11.95	28500	15506	1530	13976	
	"A2" 4+14.67 TO 8+43.29					10
C-5	BIORETENTION SWALE	190				
TOTAL		28690	15506	1530	13976	10

(N) NOT A SEPARATE PAY ITEM, FOR INFORMATION ONLY

PAVEMENT STRUCTURE QUANTITIES

SHEET No.	STATION	HMA (TYPE A)	HMA DIKE (TYPE A)	HMA (TYPE A) (TRENCH PAVING)	TACK COAT	CLASS 2 AGGREGATE BASE	COLD PLANE ASPHALT CONCRETE PAVEMENT
		TON				CY	SQYD
L-1	"A2" 2+57.45 TO 11+11.95	810			2.54	100	3120
	"A2" 14+65			21	0.03		
	"A2" 2+85 TO 8+43.29		16		0.01		
SUBTOTAL		810	16	21	2.58	100	3120
TOTAL		847			2.58	100	3120

PLACE HMA DIKE (TYPE A)

SHEET No.	STATION	LF
L-1	Lt "A2" 2+85 TO 8+43.29	558
TOTAL		558

REMOVE ROCK SLOPE PROTECTION (1/4 TON)

STATION	CY
"A2" 7+10 TO 7+90	40
TOTAL	40

GEOSYNTHETIC REINFORCEMENT

SHEET No.	STATION	SQYD
L-1	"A2" 4+14.67 TO 8+34.51	15500
TOTAL		15500

FENCE (TYPE BW, METAL POST)

SHEET No.	STATION	LF
L-1	"A2" 5+17.10 TO 6+44.65	127.55
TOTAL		127.55

REMOVE CONCRETE BARRIER (TYPE K)

STATION	LF
"A2" 6+67 TO 7+57	80
TOTAL	80

BIORETENTION SWALE

STATION	6" PERFORATED PLASTIC PIPE	CLASS 2 PERMEABLE MATERIAL	IMPORTED BIOFILTRATION SOIL	ROADWAY EXCAVATION	GEOMEMBRANE LINER
	LF	CY			SQYD
"A2" 1+19 TO 2+79	190	107	54	190	72
TOTAL	190	107	54	190	72

SUMMARY OF QUANTITIES

Q-1

NB	2-19-16
REVISED BY	DATE REVISED
NAZEER BABACARKHIAL	STEWART LEE
CALCULATED-DESIGNED BY	CHECKED BY
FUNCTIONAL SUPERVISOR	STEWART LEE

STATE OF CALIFORNIA - DEPARTMENT OF TRANSPORTATION
Caltrans
DESIGN

LAST REVISION 05-27-16 | DATE PLOTTED => 19-SEP-2016 TIME PLOTTED => 13:31

Dist	COUNTY	ROUTE	POST MILES TOTAL PROJECT	SHEET No.	TOTAL SHEETS
04	Son	1	30.5	32	97

LICENSED LANDSCAPE ARCHITECT

6-27-16
PLANS APPROVAL DATE

LICENSED LANDSCAPE ARCHITECT
BART VAN DER ZEEUW No. 2898
Expiration
9-30-17
Renewal Date
6-7-16
Date
STATE OF CALIFORNIA

THE STATE OF CALIFORNIA OR ITS OFFICERS OR AGENTS SHALL NOT BE RESPONSIBLE FOR THE ACCURACY OR COMPLETENESS OF SCANNED COPIES OF THIS PLAN SHEET.

EROSION CONTROL TYPE 1

SEQUENCE	ITEM	MATERIAL		APPLICATION RATE	REMARKS
		DESCRIPTION	TYPE		
STEP 1	FIBER ROLLS	FIBER ROLL	8" TO 10" Dia		TYPE 2 INSTALLATION
STEP 2	HYDROSEED	SEED	MIX 1	42.7 LB/ACRE	
		FIBER	WOOD	500 LB/ACRE	
STEP 3	HYDROMULCH	FIBER	COMBINATION	500 LB/ACRE	
		TACKIFIER	GUAR	125 LB/ACRE	

ROLLED EROSION CONTROL PRODUCT

SEQUENCE	ITEM	TYPE	DESCRIPTION
INSTALL RECP (NETTING) IN CONJUNCTION WITH GEOSYNTHETIC REINFORCEMENT	NETTING	TYPE B	WOVEN COIR

SEED MIX 1

BOTANICAL NAME (COMMON NAME)	PERCENT GERMINATION (MINIMUM)	POUNDS PURE LIVE SEED PER ACRE (SLOPE MEASUREMENT)
ARTEMISIA CALIFORNICA (YELLOW SAGEBRUSH)	40	1.5
BACCHARIS PILULARIS (COYOTE BRUSH)	20	0.2
BROMUS CARINATUS (CALIFORNIA BROME)	50	11
LUPINUS ARBOREUS (YELLOW BUSH LUPINE)	50	5
ERIOGONUM FASCICULATUM (CALIFORNIA BUCKWHEAT)	10	1.5
ELYMUS GLAUCUS (BLUE WILDRYE)	50	11
SALVIA MELLIFERA (BLACK SAGE)	35	2.5
STIPA PULCHRA (PURPLE NEEDLEGRASS)	50	10
TOTAL		42.7

EROSION CONTROL QUANTITIES

SHEET No.	HYDROSEED	HYDROMULCH	ROLLED EROSION CONTROL PRODUCT (NETTING)	FIBER ROLLS
	SQFT			LF
EC-1	42,700	42700	37000	1645
TOTAL	42,700	42700	37000	1645

EROSION CONTROL LEGEND AND QUANTITIES

ECL-1

CALCULATED-DESIGNED BY	BART VAN DER ZEEUW
CHECKED BY	SALLY BANG
REVISED BY	BZ
DATE REVISED	2-19-16
SENIOR LANDSCAPE ARCHITECT	DAVID YAM

STATE OF CALIFORNIA - DEPARTMENT OF TRANSPORTATION
Caltrans® WATER QUALITY

LAST REVISION 05-18-16 | DATE PLOTTED => 19-SEP-2016 TIME PLOTTED => 13:31

Dist	COUNTY	ROUTE	POST MILES TOTAL PROJECT	SHEET No.	TOTAL SHEETS
04	Son	1	30.5	33	97

LICENSED LANDSCAPE ARCHITECT

6-27-16
PLANS APPROVAL DATE

LICENSED LANDSCAPE ARCHITECT
BART VAN DER ZEEUW No. 3898
Expiration Date
9-30-17
Renewal Date
6-7-16
Date
STATE OF CALIFORNIA

THE STATE OF CALIFORNIA OR ITS OFFICERS OR AGENTS SHALL NOT BE RESPONSIBLE FOR THE ACCURACY OR COMPLETENESS OF SCANNED COPIES OF THIS PLAN SHEET.

NOTE:

FOR ACCURATE RIGHT OF WAY DATA, CONTACT RIGHT OF WAY ENGINEERING AT THE DISTRICT OFFICE.

ABBREVIATION:

PSNE PERMANENT SLOPE NAIL EASEMENT

LEGEND:

EROSION CONTROL TYPE 1

ROLLED EROSION CONTROL PRODUCT (NETTING)

PSNE PERMANENT SLOPE NAIL EASEMENT

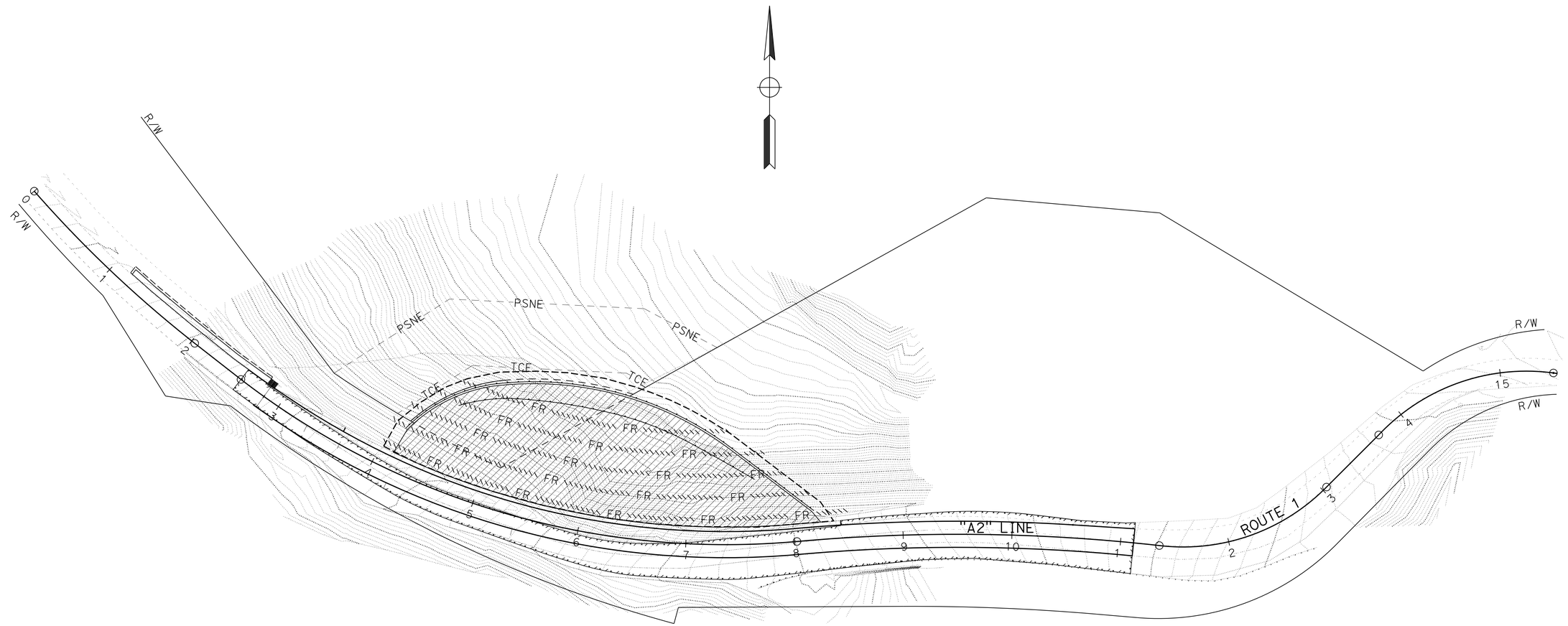

EROSION CONTROL PLAN

SCALE: 1' = 50'

APPROVED FOR EROSION CONTROL WORK ONLY

EC-1

STATE OF CALIFORNIA - DEPARTMENT OF TRANSPORTATION
Caltrans®
WATER QUALITY

SENIOR LANDSCAPE ARCHITECT: DAVID YAM

CALCULATED-DESIGNED BY: BART VAN DER ZEEUW
CHECKED BY: SALLY BANG

REVISED BY: BZ
DATE REVISED: 2-19-16

LAST REVISION: 06-08-16
DATE PLOTTED => 19-SEP-2016
TIME PLOTTED => 13:32

Dist	COUNTY	ROUTE	POST MILES TOTAL PROJECT	SHEET No.	TOTAL SHEETS
04	Son	1	30.5	34	97

LICENSED LANDSCAPE ARCHITECT

6-27-16

PLANS APPROVAL DATE

LICENSED LANDSCAPE ARCHITECT — BART VAN DER ZEEUW No. 3898 — Registered 9-30-17 — Renewal Date 6-7-16 — Date — STATE OF CALIFORNIA

THE STATE OF CALIFORNIA OR ITS OFFICERS OR AGENTS SHALL NOT BE RESPONSIBLE FOR THE ACCURACY OR COMPLETENESS OF SCANNED COPIES OF THIS PLAN SHEET.

NOTES:

* SEE GEOSYNTHETIC REINFORCED EMBANKMENT CONSTRUCTION DETAILS

1. INSTALL RECP (NETTING) IN CONJUNCTION WITH INSTALLATION OF GEOSYNTHETIC REINFORCEMENT.
2. ANCHOR EROSION CONTROL NETTING THROUGH GEOSYNTHETIC REINFORCEMENT AT ALL LOCATIONS.
3. STAPLE RECP (NETTING) AS NECESSARY TO ENSURE CONTACT WITH GROUND PLANE.
4. DIMENSIONS MAY VARY TO MATCH FIELD CONDITIONS.

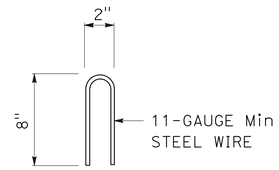

STEEL STAPLE DETAIL

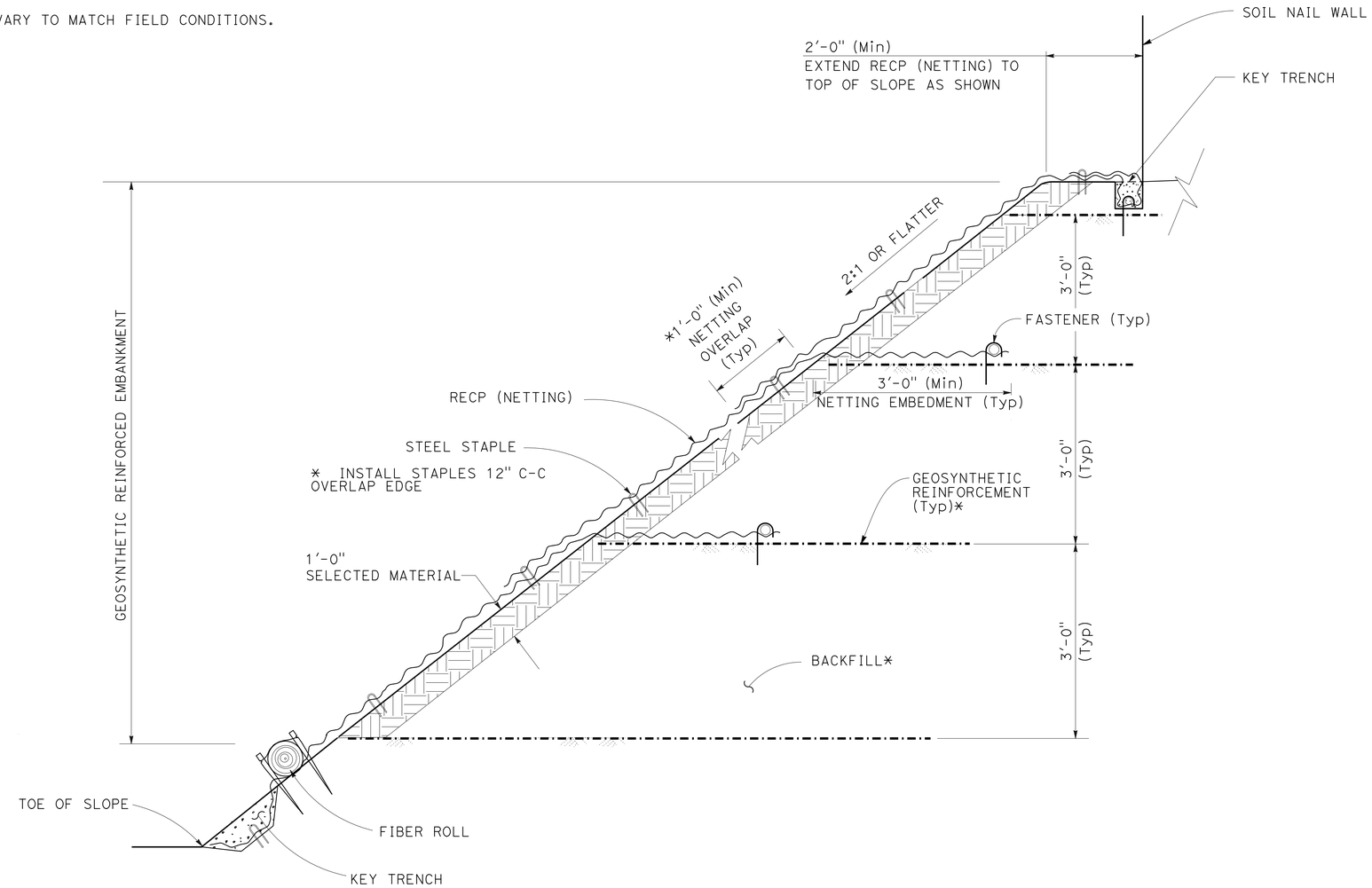

SECTION

EROSION CONTROL (NETTING) WITH OVERLAP FACE FOR GEOSYNTHETIC REINFORCED EMBANKMENT

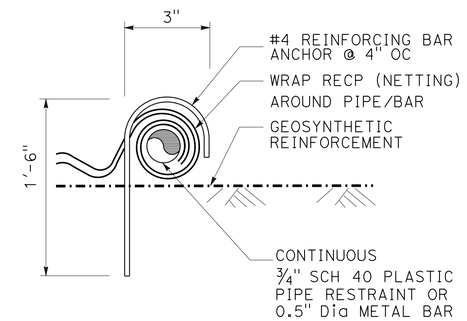

SECTION

FASTENER DETAIL

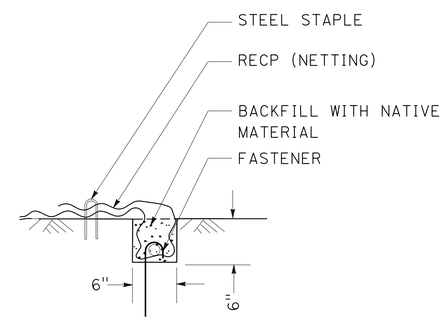

SECTION

KEY TRENCH DETAIL

EROSION CONTROL DETAILS

NO SCALE

ECD-1

STATE OF CALIFORNIA - DEPARTMENT OF TRANSPORTATION

Caltrans® WATER QUALITY

SENIOR LANDSCAPE ARCHITECT: DAVID YAM

CALCULATED-DESIGNED BY: BART VAN DER ZEEUW

CHECKED BY: SALLY BANG

REVISED BY: BZ

DATE REVISED: 2-19-16

LAST REVISION 05-18-16 | DATE PLOTTED => 19-SEP-2016 | TIME PLOTTED => 13:32

Dist	COUNTY	ROUTE	POST MILES TOTAL PROJECT	SHEET No.	TOTAL SHEETS
04	Son	1	30.5	35	97

Elaine Wong 2-24-16
REGISTERED ELECTRICAL ENGINEER DATE

6-27-16
PLANS APPROVAL DATE

REGISTERED PROFESSIONAL ENGINEER Elaine T. Wong No. 13753 Exp. 6-30-17 ELECTRICAL STATE OF CALIFORNIA

THE STATE OF CALIFORNIA OR ITS OFFICERS OR AGENTS SHALL NOT BE RESPONSIBLE FOR THE ACCURACY OR COMPLETENESS OF SCANNED COPIES OF THIS PLAN SHEET.

ELECTRICAL INDEX:

SHEET No.	TITLE
E-1	ELECTRICAL INDEX, NOTES, LEGEND AND ABBREVIATIONS
E-2 TO E-4	TEMPORARY SIGNAL SYSTEM
E-5 TO E-6	ELECTRICAL DETAILS
E-7	ELECTRICAL QUANTITIES

NOTES:

1. THE LOWEST SAG POINT OF THE MESSENGER WIRE MUST BE 25′ MINIMUM CLEARANCE FROM FINISHED GRADE/ROADWAY.
2. OVERHEAD CONDUCTORS MUST BE TIED ON MESSENGER WIRE AT EVERY 3′ MAXIMUM WITH SELF-CLINGING NYLON TIES.
3. OVERHEAD ENTRANCE CONDUIT FITTING MUST BE INSTALLED IN SUCH A WAY SO THAT RAINWATER MUST NOT SEEP INTO THE ELECTRICAL EQUIPMENT THROUGH THE ENTRANCE FITTING, FROM A DRIP LOOP AT THE ENTRANCE FITTING.
4. PROVIDE GUY WIRE, GUY GUARDS AND ANCHOR AS REQUIRED.
5. ESTABLISH CONTINUOUS GROUND WITH SYSTEM GROUND TO ALL METAL PARTS IN SYSTEMS BY BONDING JUMPERS AND CONDUITS.
6. A GROUND ROD MUST BE INSTALLED IN THE PULL BOX ADJACENT TO WOOD POLES AND BOND TO RIGID METAL CONDUIT.
7. MAXIMUM SPACING BETWEEN WOOD POLES WITH OVERHEAD CONDUCTORS MUST NOT EXCEED 200 FEET.
8. REFER TO SES SHEETS FOR TEMPORARY WOOD POLE DETAILS.

NEW:

WOOD POLE WITH 165 W LED LUMINAIRE (ON MASTARM), SIGNAL HEAD, PBA, R10-6 SIGN AND CONDUIT RISER. SEE DETAIL 6 ON SHEET E-5.

ADVANCE FLASHING BEACON WITH A W3-3 SIGN AND SIGN LIGHTING MOUNTED ON A WOOD POLE. SEE APPLICABLE DETAIL 1 ON SHEET E-5.

(G) GENERATOR WITH A BACK-UP GENERATOR

(FUEL) FUEL TANK

—×———×— TEMPORARY CHAIN LINK FENCE (TYPE CL-6) WITH 4′ CHAIN LINK GATE (TYPE CL-6)

—— F —— FUEL LINE

OH — — — OVERHEAD LINES, WITH 5/8", 7 STRAND GALVANIZED MESSENGER WIRES, CONDUCTORS

ABBREVIATION:

UPS UNINTERRUPTIBLE POWER SUPPLY

LEGEND:

1. INSTALL STATE-FURNISHED MODEL 2070 CONTROLLER ASSEMBLY WITH MODEL 332L CABINET. SEE TEMPORARY FOUNDATION PLATFORM DETAIL 5 ON SHEET E-5
2. INSTALL 2#8 (120 V SB FLASHING BEACON)
3. INSTALL 2#8 (120 V SB FLASHING BEACON), 1 DLC
4. INSTALL 2#8 (120 V SB FLASHING BEACON)
   2#8 (240 V LIGHTING)
   1#10 (120 V SIGNAL NEUTRAL)
   8#12 (3-Ø1, 2-PBA(Ø1), 3-SPARES)
   2 DLC
5. INSTALL 1½"C, 1 DLC
6. INSTALL 2#8 (120 V SB FLASHING BEACON)
   2#8 (240 V LIGHTING)
   1#10 (120 V SIGNAL NEUTRAL)
   11#12 (3-Ø2, 2-PBA(Ø1), 3-Ø2, 3-SPARES)
   2 DLC
7. INSTALL 2#8 (120 V NB FLASHING BEACON)
8. INSTALL 2#8 (120 V NB FLASHING BEACON), 1 DLC
9. INSTALL 2#8 (240 V LIGHTING)
   1#10 (120 V SIGNAL NEUTRAL)
   8#12 (3-Ø2, 2-PBA(Ø2), 3-SPARES)
   1 DLC
10. INSTALL 2#8 (120 V SB FLASHING BEACON)
    4#8 (240 V LIGHTING)
    2#10 (120 V SIGNAL NEUTRAL)
    16#12 (3-Ø1, 2-PBA(Ø1), 3-Ø2, 2-PBA(Ø2), 6-SPARES)
    3 DLC
11. INSTALL 2½"C, 2#8 (120 V SB FLASHING BEACON)
    2#8 (120 V NB FLASHING BEACON)
    4#8 (240 V LIGHTING)
    2#10 (120 V SIGNAL NEUTRAL)
    16#12 (3-Ø1, 2-PBA(Ø1), 3-Ø2, 2-PBA(Ø2), 6-SPARES)
    4 DLC
12. INSTALL 3"C, 2#6 (120 V SERVICE TO CONTROLLER)
    2#10 (120 V SIGNAL NEUTRAL)
    16#12 (3-Ø1, 2-PBA(Ø1), 3-Ø2, 2-PBA(Ø2), 6-SPARES)
    4 DLC
13. INSTALL 2"C, 2#6 (120 V SERVICE TO CONTROLLER)
    2#8 (120 V SB FLASHING BEACON)
    2#8 (120 V NB FLASHING BEACON)
    2#8 (240 V LIGHTING)
14. INSTALL 2"C, 3#4, 1#8(G)
15. INSTALL 5 TURNS TYPE D LOOP
16. INSTALL 4′ TEMPORARY GATE (TYPE CL-6), 53′ TEMPORARY FENCE (TYPE CL-6), PART OF ROADWAY PAY ITEM SEE ROADWAY PLANS FOR DETAILS
17. INSTALL WOOD POLE WITH 165 W LED LUMINAIRE SIGNAL HEAD, AND TYPE B PBA FOR CYCLIST, SEE APPLICABLE DETAIL 6 ON SHEET E-5
18. INSTALL WOOD POLE WITH SIGNAL HEAD, SEE APPLICABLE DETAIL 3 ON SHEET E-5
19. INSTALL 1#10 (120 V SIGNAL NEUTRAL)
    6#12 (3-Ø1, 3-SPARES)
20. INSTALL 1#10 (120 V SIGNAL NEUTRAL)
    6#12 (3-Ø2, 3-SPARES)
21. SEE DETAIL 4 ON SHEET E-5

ELECTRICAL INDEX, NOTES, LEGEND AND ABBREVIATIONS

E-1

STATE OF CALIFORNIA - DEPARTMENT OF TRANSPORTATION
Caltrans
ELECTRICAL

FUNCTIONAL SUPERVISOR: BEHZAD GOLEMOHAMMADI
CALCULATED-DESIGNED BY: ALEX KHOO
CHECKED BY: ELAINE T. WONG
REVISED BY: AK
DATE REVISED: 2-19-16

LAST REVISION 05-18-16
DATE PLOTTED => 19-SEP-2016
TIME PLOTTED => 13:32

Dist	COUNTY	ROUTE	POST MILES TOTAL PROJECT	SHEET No.	TOTAL SHEETS
04	Son	1	30.5	36	97

Elaine Wong 2-24-16
REGISTERED ELECTRICAL ENGINEER DATE

6-27-16
PLANS APPROVAL DATE

REGISTERED PROFESSIONAL ENGINEER
Elaine T. Wong
No. 13753
Exp. 6-30-17
ELECTRICAL
STATE OF CALIFORNIA

THE STATE OF CALIFORNIA OR ITS OFFICERS OR AGENTS SHALL NOT BE RESPONSIBLE FOR THE ACCURACY OR COMPLETENESS OF SCANNED COPIES OF THIS PLAN SHEET.

NOTE:

FOR ACCURATE RIGHT OF WAY DATA, CONTACT
RIGHT OF WAY ENGINEERING AT THE DISTRICT OFFICE.

Ø 1 → ← Ø 2

TRAFFIC PHASE DIAGRAM

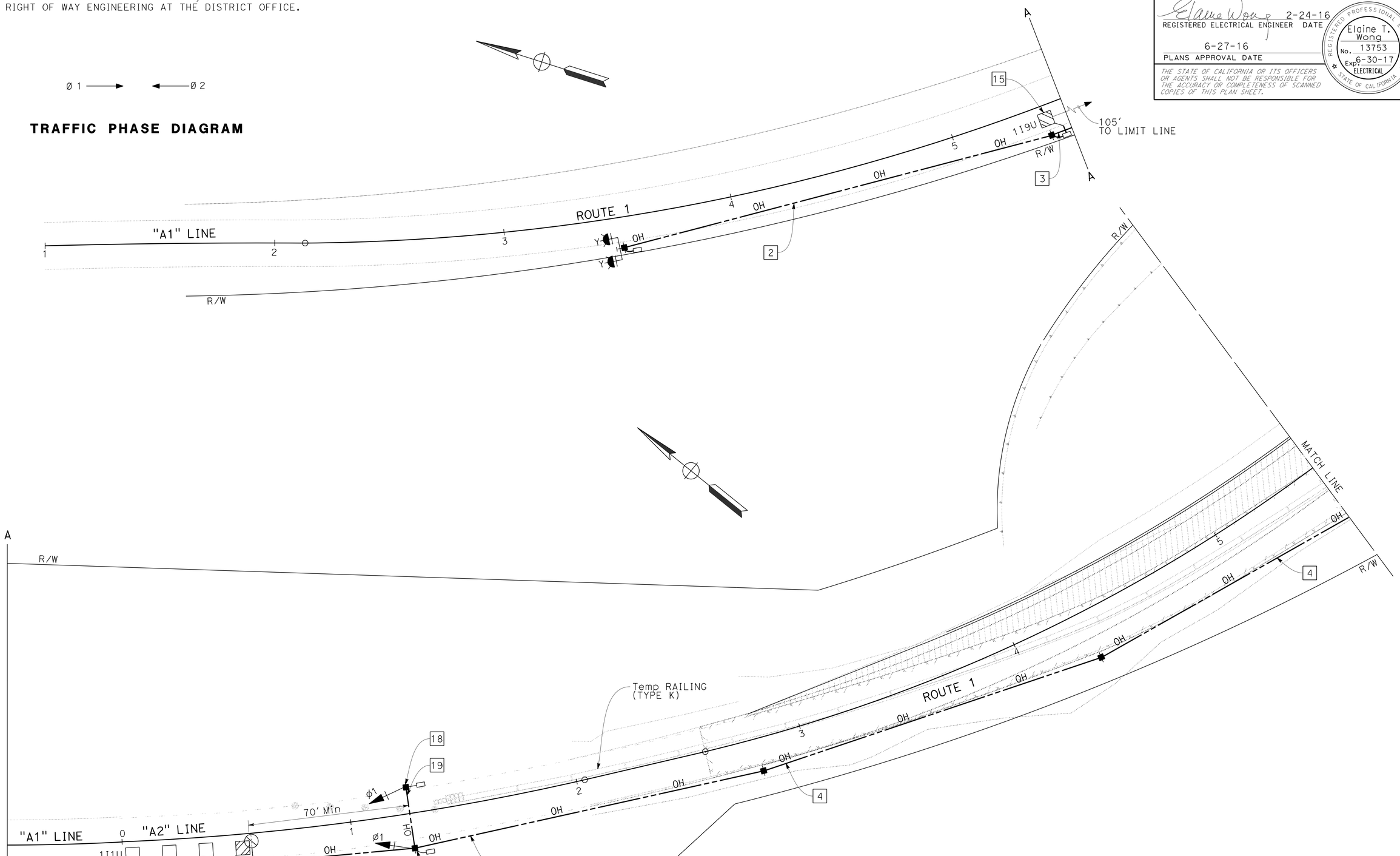

APPROVED FOR ELECTRICAL WORK ONLY

FOR NOTES, ABBREVIATION AND LEGEND, SEE SHEET E-1

TEMPORARY SIGNAL SYSTEM

SCALE: 1" = 20'

E-2

STATE OF CALIFORNIA - DEPARTMENT OF TRANSPORTATION
Caltrans
ELECTRICAL

FUNCTIONAL SUPERVISOR: BEHZAD GOLEMOHAMMADI
CALCULATED-DESIGNED BY: ALEX KHOO
CHECKED BY: ELAINE T. WONG
REVISED BY: AK
DATE REVISED: 2-19-16

LAST REVISION 05-18-16
DATE PLOTTED => 19-SEP-2016
TIME PLOTTED => 13:32

Dist	COUNTY	ROUTE	POST MILES TOTAL PROJECT	SHEET No.	TOTAL SHEETS
04	Son	1	30.5	37	97

Elaine Wong 2-24-16
REGISTERED ELECTRICAL ENGINEER DATE

6-27-16
PLANS APPROVAL DATE

REGISTERED PROFESSIONAL ENGINEER
Elaine T. Wong
No. 13753
Exp. 6-30-17
ELECTRICAL
STATE OF CALIFORNIA

THE STATE OF CALIFORNIA OR ITS OFFICERS OR AGENTS SHALL NOT BE RESPONSIBLE FOR THE ACCURACY OR COMPLETENESS OF SCANNED COPIES OF THIS PLAN SHEET.

NOTE:

FOR ACCURATE RIGHT OF WAY DATA, CONTACT
RIGHT OF WAY ENGINEERING AT THE DISTRICT OFFICE.

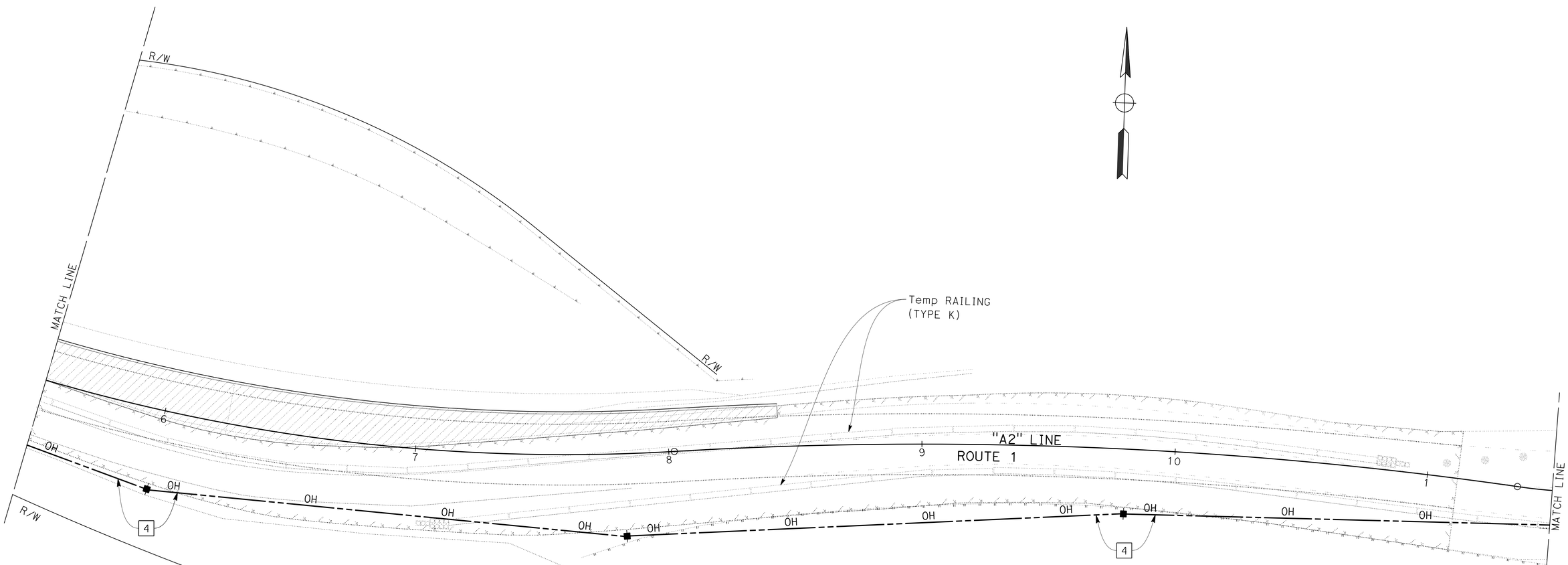

TEMPORARY SIGNAL SYSTEM

SCALE: 1" = 20'

APPROVED FOR ELECTRICAL WORK ONLY

FOR NOTES, ABBREVIATION AND LEGEND, SEE SHEET E-1

E-3

STATE OF CALIFORNIA - DEPARTMENT OF TRANSPORTATION
Caltrans
ELECTRICAL

FUNCTIONAL SUPERVISOR: BEHZAD GOLEMOHAMMADI
CALCULATED-DESIGNED BY: ALEX KHOO
CHECKED BY: ELAINE T. WONG
REVISED BY: AK
DATE REVISED: 2-19-16

LAST REVISION 05-18-16
DATE PLOTTED => 19-SEP-2016
TIME PLOTTED => 13:32

Dist	COUNTY	ROUTE	POST MILES TOTAL PROJECT	SHEET No.	TOTAL SHEETS
04	Son	1	30.5	38	97

REGISTERED ELECTRICAL ENGINEER 2-24-16 DATE

6-27-16
PLANS APPROVAL DATE

REGISTERED PROFESSIONAL ENGINEER
Elaine T. Wong
No. 13753
Exp. 6-30-17
ELECTRICAL
STATE OF CALIFORNIA

THE STATE OF CALIFORNIA OR ITS OFFICERS OR AGENTS SHALL NOT BE RESPONSIBLE FOR THE ACCURACY OR COMPLETENESS OF SCANNED COPIES OF THIS PLAN SHEET.

NOTE:

FOR ACCURATE RIGHT OF WAY DATA, CONTACT RIGHT OF WAY ENGINEERING AT THE DISTRICT OFFICE.

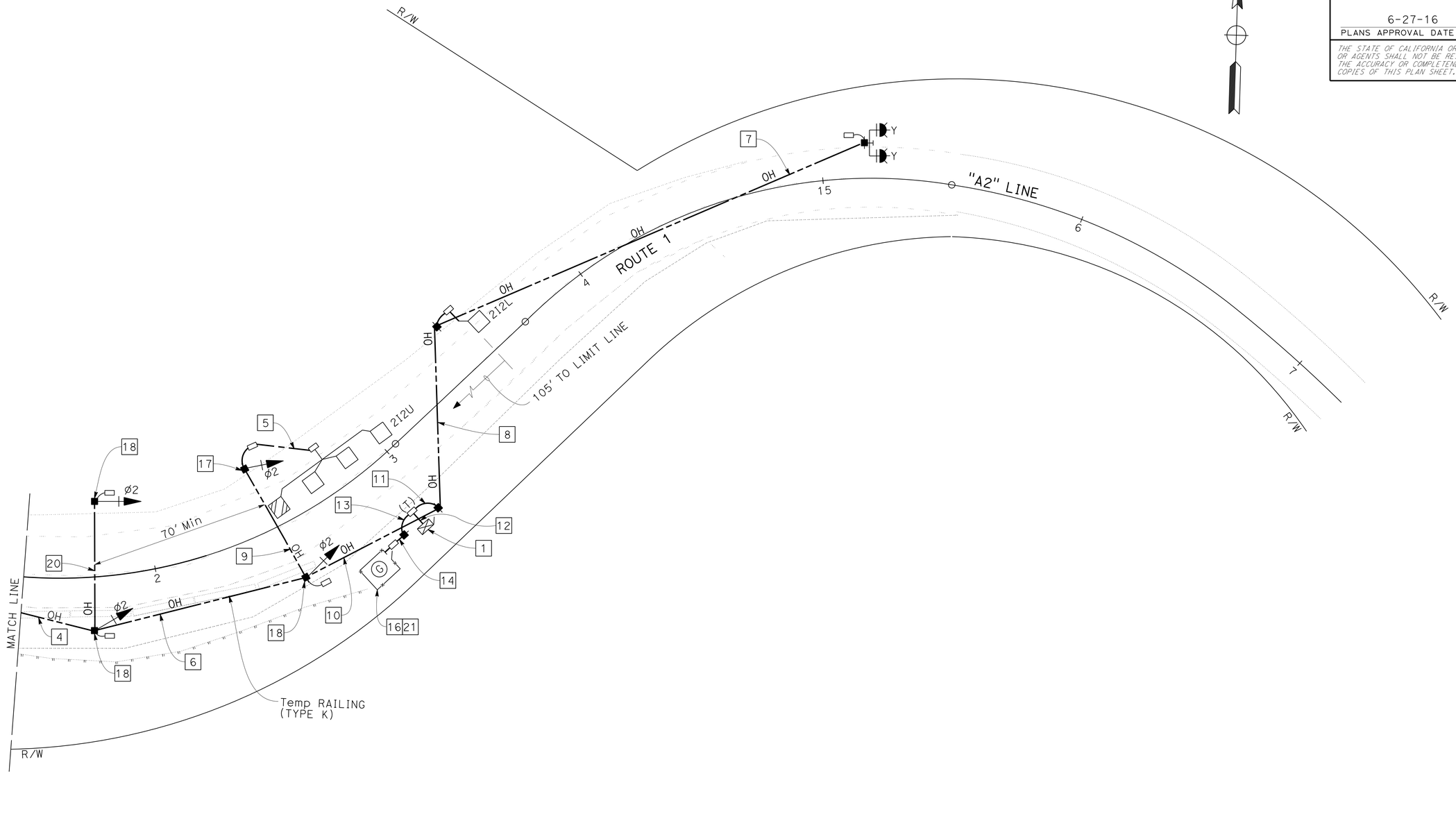

TEMPORARY SIGNAL SYSTEM

SCALE: 1" = 20'

APPROVED FOR ELECTRICAL WORK ONLY

FOR NOTES, ABBREVIATION AND LEGEND, SEE SHEET E-1

E-4

STATE OF CALIFORNIA - DEPARTMENT OF TRANSPORTATION
Caltrans
ELECTRICAL

FUNCTIONAL SUPERVISOR: BEHZAD GOLEMOHAMMADI

CALCULATED-DESIGNED BY: ALEX KHOO
CHECKED BY: ELAINE T. WONG

REVISED BY: AK
DATE REVISED: 2-19-16

LAST REVISION 05-18-16
DATE PLOTTED => 19-SEP-2016
TIME PLOTTED => 13:32

Dist	COUNTY	ROUTE	POST MILES TOTAL PROJECT	SHEET No.	TOTAL SHEETS
04	Son	1	30.5	39	97

REGISTERED ELECTRICAL ENGINEER — DATE 2-24-16

6-27-16
PLANS APPROVAL DATE

REGISTERED PROFESSIONAL ENGINEER — Elaine T. Wong — No. 13753 — Exp. 6-30-17 — ELECTRICAL — STATE OF CALIFORNIA

THE STATE OF CALIFORNIA OR ITS OFFICERS OR AGENTS SHALL NOT BE RESPONSIBLE FOR THE ACCURACY OR COMPLETENESS OF SCANNED COPIES OF THIS PLAN SHEET.

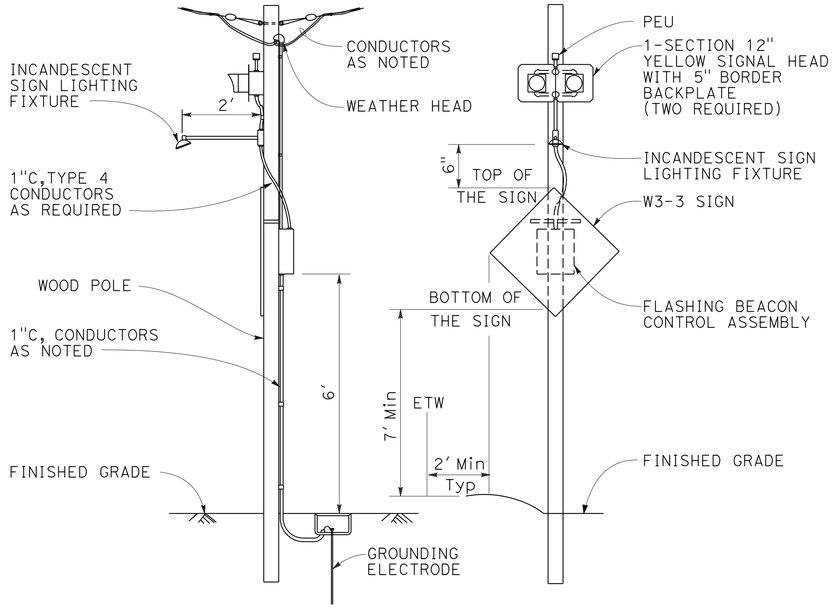

TEMPORARY FLASHING BEACON INSTALLATION
DETAIL 1

1.

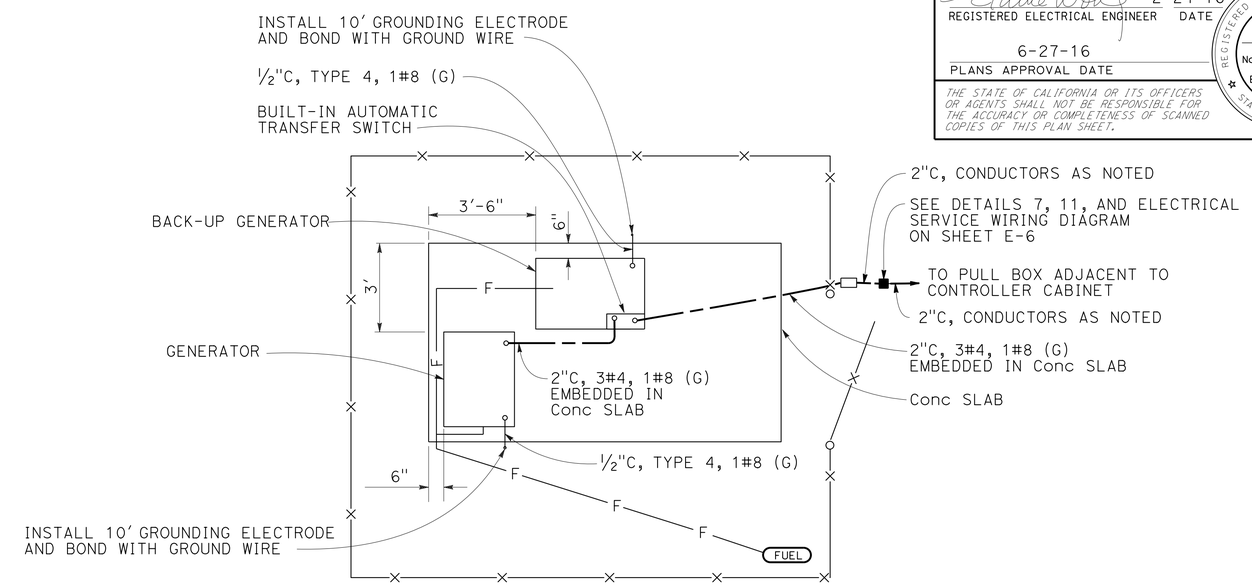

GENERATOR WITH BACK-UP GENERATOR
DETAIL 4

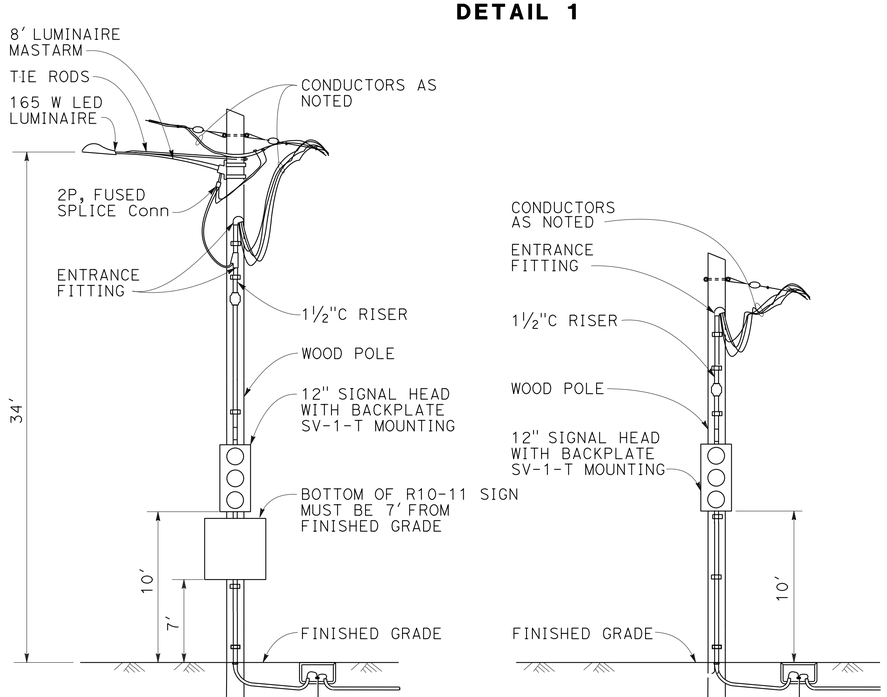

TEMPORARY SIGNAL AND LIGHTING INSTALLATION
DETAIL 2 **DETAIL 3**

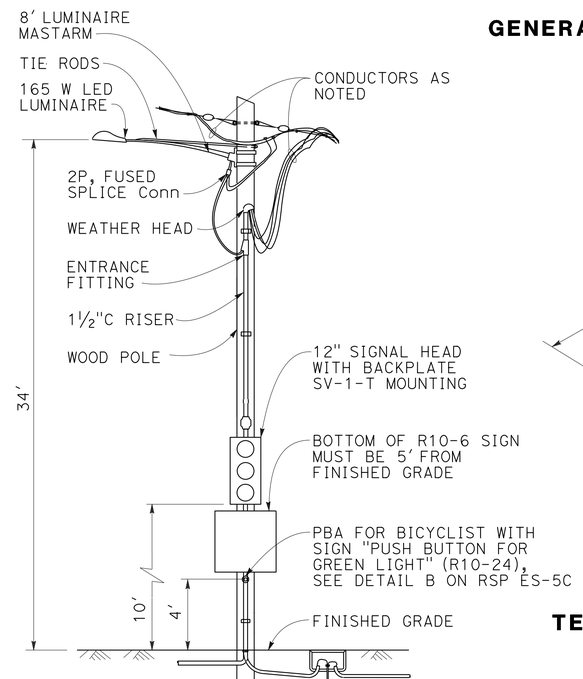

TEMPORARY SIGNAL INSTALLATION
DETAIL 6

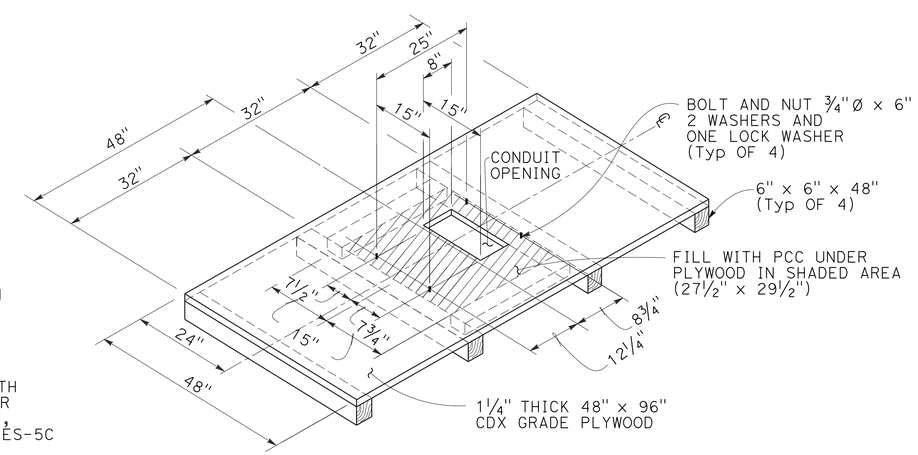

TEMPORARY MODEL 332L CABINET FOUNDATION PLATFORM
DETAIL 5

ELECTRICAL DETAILS
NO SCALE

E-5

REVISED BY	DATE REVISED
AK	2-19-16

CALCULATED-DESIGNED BY: ALEX KHOO
CHECKED BY: ELAINE T. WONG
FUNCTIONAL SUPERVISOR: BEHZAD GOLEMOHAMMADI

STATE OF CALIFORNIA - DEPARTMENT OF TRANSPORTATION
Caltrans
ELECTRICAL

LAST REVISION 05-18-16
DATE PLOTTED => 19-SEP-2016
TIME PLOTTED => 13:32

Dist	COUNTY	ROUTE	POST MILES TOTAL PROJECT	SHEET No.	TOTAL SHEETS
04	Son	1	30.5	40	97

Elaine Wong 2-24-16
REGISTERED ELECTRICAL ENGINEER DATE

6-27-16
PLANS APPROVAL DATE

REGISTERED PROFESSIONAL ENGINEER Elaine T. Wong No. 13753 Exp. 6-30-17 ELECTRICAL STATE OF CALIFORNIA

THE STATE OF CALIFORNIA OR ITS OFFICERS OR AGENTS SHALL NOT BE RESPONSIBLE FOR THE ACCURACY OR COMPLETENESS OF SCANNED COPIES OF THIS PLAN SHEET.

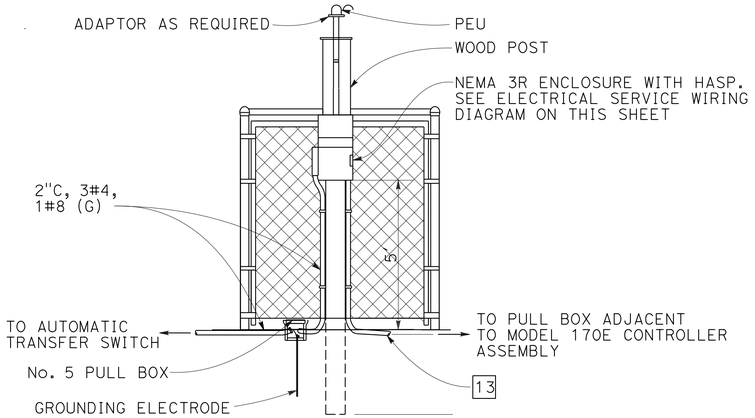

ELECTRICAL SERVICE FRONT VIEW
DETAIL 7

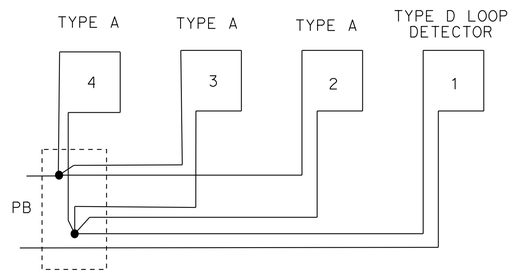

1D + 3A LOOP CONNECTION
DETAIL A

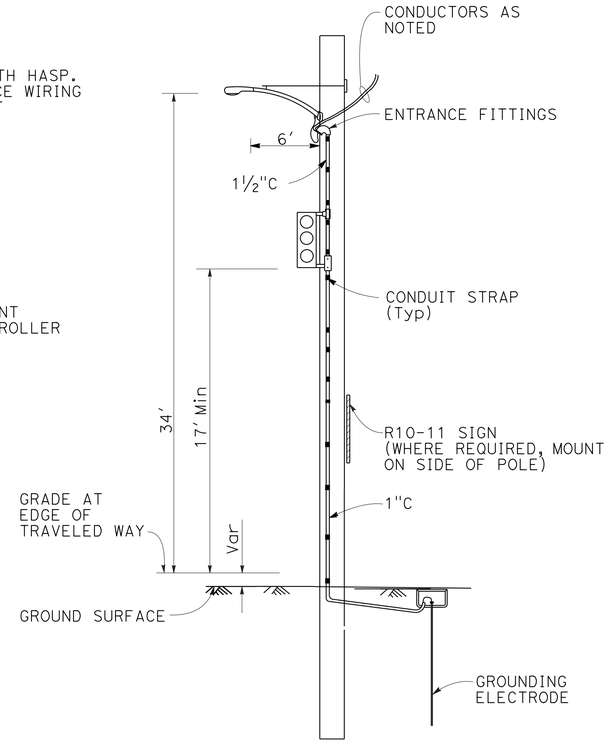

TEMPORARY SIGNAL AND LIGHTING INSTALLATION ON WOOD POLE
DETAIL 8

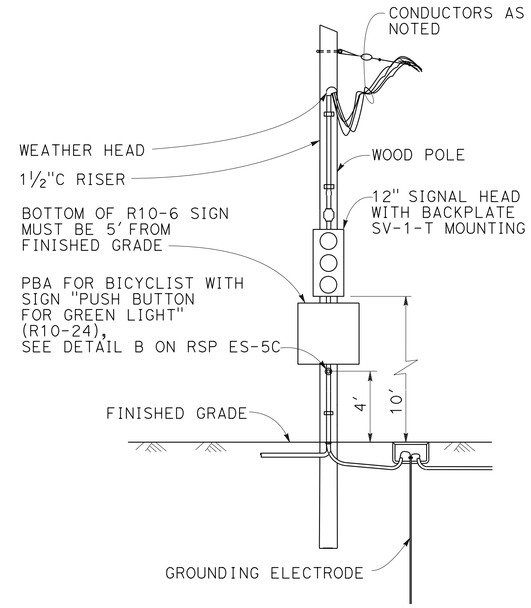

TEMPORARY SIGNAL INSTALLATION ON WOOD POLE
DETAIL 9

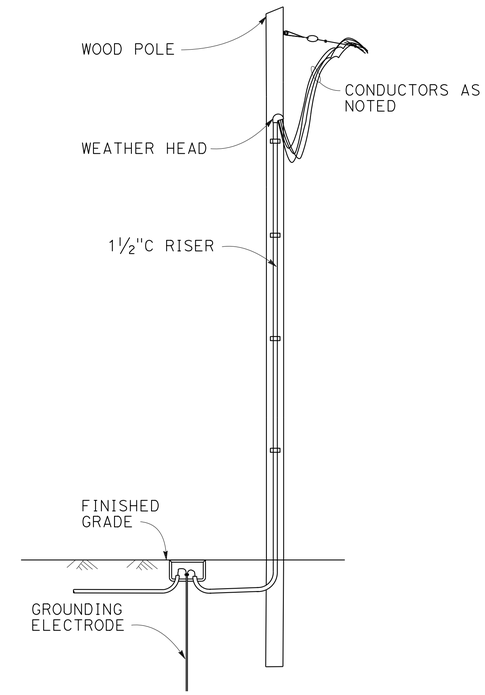

TEMPORARY WOOD POLE INSTALLATION
DETAIL 10

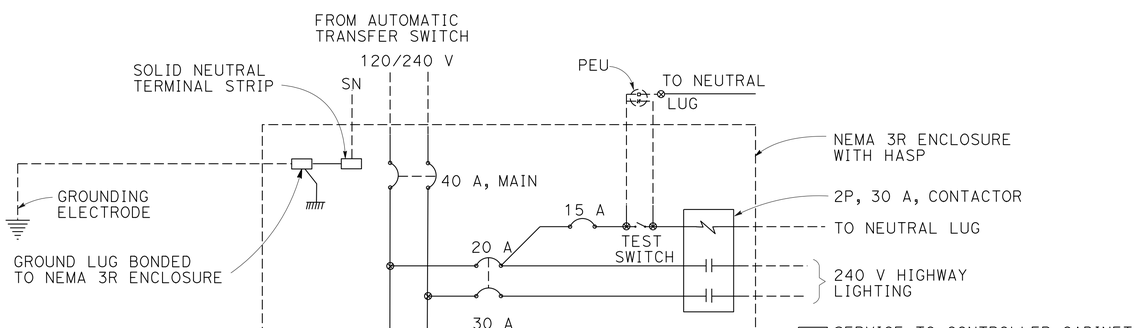

ELECTRICAL SERVICE WIRING DIAGRAM

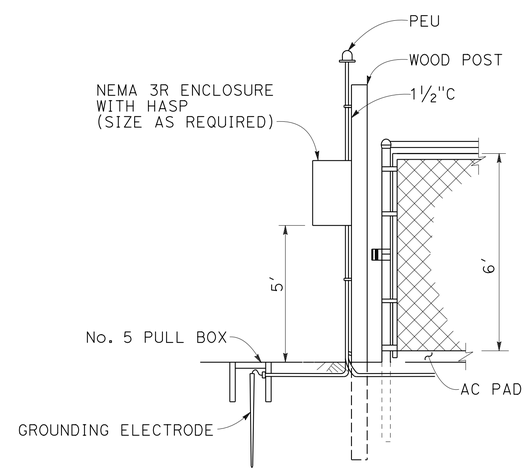

ELECTRICAL SERVICE SIDE VIEW
DETAIL 11

ELECTRICAL DETAILS

NO SCALE

E-6

REVISED BY	DATE REVISED
AK	2-19-16

ALEX KHOO — ELAINE T. WONG — CALCULATED-DESIGNED BY — CHECKED BY

FUNCTIONAL SUPERVISOR: BEHZAD GOLEMOHAMMADI

STATE OF CALIFORNIA - DEPARTMENT OF TRANSPORTATION — ELECTRICAL — Caltrans

LAST REVISION 05-18-16 — DATE PLOTTED => 19-SEP-2016 — TIME PLOTTED => 13:32

Dist	COUNTY	ROUTE	POST MILES TOTAL PROJECT	SHEET No.	TOTAL SHEETS
04	Son	1	30.5	41	97

Elaine Wong 2-24-16
REGISTERED ELECTRICAL ENGINEER DATE

6-27-16
PLANS APPROVAL DATE

REGISTERED PROFESSIONAL ENGINEER
Elaine T. Wong
No. 13753
Exp. 6-30-17
ELECTRICAL
STATE OF CALIFORNIA

THE STATE OF CALIFORNIA OR ITS OFFICERS OR AGENTS SHALL NOT BE RESPONSIBLE FOR THE ACCURACY OR COMPLETENESS OF SCANNED COPIES OF THIS PLAN SHEET.

TEMPORARY SIGNAL SYSTEM

SHEET No.	NEMA 3R ENCLOSURE	GENERATOR WITH BACK-UP GENERATOR	WOOD POLE WITH FLASHING BEACON	WOOD POLE	WOOD POLE WITH LUMINAIRE AND SIGNAL	WOOD POLE WITH SIGNAL	LOOP DETECTOR	PULL BOX	CONDUIT				SIGNAL CONDUCTORS					DLC
									1½"	2"	2½"	3"	No. 4	No. 6	No. 8	No. 10	No. 12	
	EA								ft									
E-2			1	3	1	2	5	6	45						3900	585	4600	1260
E-3				3											2640	660	5280	1320
E-4	1	1	1	3	1	3	5	9	40	35	25	15	35	45	2325	325	2785	575
TOTAL	1	1	2	9	2	5	10	15	85	35	25	15	35	45	8865	1570	12665	3155

ITEMS SHOWN IN THIS TABLE ARE NOT A SEPARATE PAY ITEM, FOR INFORMATION ONLY

ELECTRICAL QUANTITIES

E-7

CALCULATED-DESIGNED BY	ALEX KHOO
CHECKED BY	ELAINE T. WONG
REVISED BY	AK
DATE REVISED	2-19-16
FUNCTIONAL SUPERVISOR	BEHZAD GOLEMOHAMMADI

STATE OF CALIFORNIA - DEPARTMENT OF TRANSPORTATION
Caltrans
ELECTRICAL

LAST REVISION 05-18-16 | DATE PLOTTED => 19-SEP-2016 | TIME PLOTTED => 13:32

DIST	COUNTY	ROUTE	POST MILES TOTAL PROJECT	SHEET No.	TOTAL SHEETS
04	Son	1	30.5	42	97

REGISTERED CIVIL ENGINEER 4-18-16 DATE

6-27-16
PLANS APPROVAL DATE

REGISTERED PROFESSIONAL ENGINEER DAVID A. NEUMANN No. C52639 Exp. 12/31/2016 CIVIL STATE OF CALIFORNIA

The State of California or its officers or agents shall not be responsible for the accuracy or completeness of scanned copies of this plan sheet.

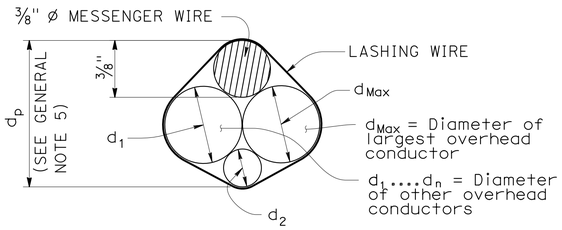

$d_p = 3/8" + d_{Max} + 0.30 * (d_1 + d_2 + \ldots d_n)$

PROJECTED DEPTH OF OVERHEAD BUNDLE, (d_p)

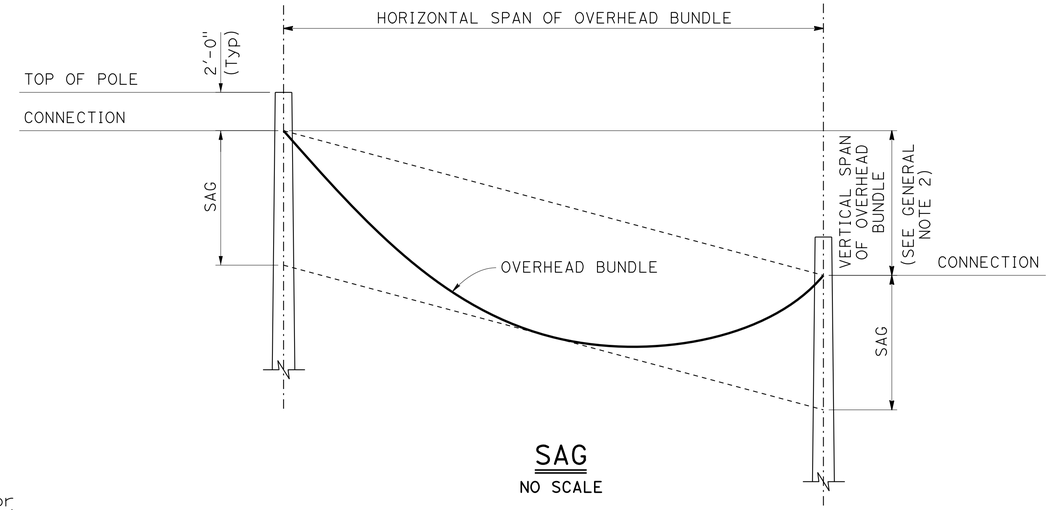

SAG

NO SCALE

Design: AASHTO Standard Specifications for Structural Supports for Highway Signs, Luminaires and Traffic Signals, Fifth Edition (LTS-5).

GROUP LOAD COMBINATIONS:

I Dead Load
II Dead Load + Wind Load
III Dead Load + 0.5 (Wind Load) + Ice Load
IV Fatigue: Not used

LOADING:

Wind Loading: 100 mph (3-second gust)
Wind Recurrence Interval: 10 years
Combined height, exposure, and elevated terrain factor = 1.05
(Exposure C, structure is not located on or over the top half of a ridge, hill, or escarpment)

Ice Loading: 3.0 psf on surfaces, 0.60 in radial thickness of ice at a unit weight of 60 pcf on overhead bundles

BASIC DESIGN VALUES:

Timber Poles: Fb = 1850 psi
Fv = 110 psi
Fcp = 230 psi
Fc = 950 psi
E = 1500 x 10^3 psi

DESIGN WIRE BREAKING STRENGTHS:

ASTM A475, Utilities Grade, 7 strand modified by termination efficiency factor of 0.8

FOUNDATION DESIGN NOTES:

1. Pole embedment depth design is based on Broms' approximate procedure as described in Article 13.6 of AASHTO LTS-5.

2. Embedment depth is calculated based on following soil parameters,
Cohesive Soil:
Shear strength of soil c = 1500 psf.
Cohesionless Soil:
Ø = 30 deg, γ = 120 pcf.
Soil assumed to be unsaturated.

3. An overload factor of 2.0 and an undercapacity factor of 0.7 were used for safety factor of 2.86.

4. Allowable vertical bearing pressure at the end bearing of poles is 3000 psf at 6 feet or more embedment.

5. Guy wire anchor minimum allowable tension capacity, "Qa" = 8,900 lbs.

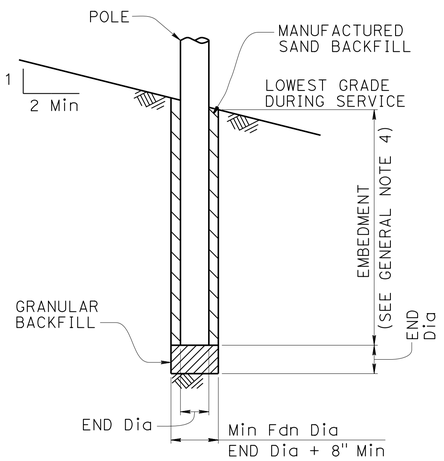

POLE FOUNDATION

GENERAL NOTES:

1. The messenger wire and any combination of overhead conductors must not exceed either a self weight of 3.0 lb/ft or the maximum d in the pole selection tables.

2. The maximum vertical span is 10% of the horizontal span.

3. For poles with adjacent unbalanced horizontal spans, the shortest horizontal span must be at least 50% of the largest horizontal span.

4. Add 2'-0" for slopes above 1V:4H.

5. For a pole supporting multiple spans, calculate d_p for each span and use the largest value.

6. Do not exceed the attachments shown.

DIAMETERS AND SELF WEIGHT OF OVERHEAD CONDUCTORS

CONDUCTOR OR CABLE TYPE	DIAMETER d (in)	WEIGHT w (plf)
3 CONDUCTOR SIGNAL CABLE (3CSC)	0.400	0.0980
5 CONDUCTOR SIGNAL CABLE (5CSC)	0.500	0.1560
9 CONDUCTOR SIGNAL CABLE (9CSC)	0.650	0.2760
12 CONDUCTOR SIGNAL CABLE (12CSC)	0.800	0.3970
28 CONDUCTOR SIGNAL CABLE (28CSC)	0.900	0.6490
1-#14	0.166	0.0235
1-#12	0.185	0.0330
1-#10	0.210	0.0476
1-#8	0.271	0.0774
1-#6	0.310	0.1130
1-#4	0.359	0.1690
1-#3	0.388	0.2080
1-#2	0.420	0.2560
1-#1	0.498	0.3340
6-CONDUCTOR SIGNAL INTERCONNECT CABLE (SIC)	0.350	0.0860
12-CONDUCTOR SIGNAL INTERCONNECT CABLE (SIC)	0.500	0.1440
DETECTOR LEAD-IN CABLE (DLC)	0.310	0.0440
12 to 48-STRAND FIBER OPTIC CABLE (48FOC)	0.424	0.0600
72-STRAND FIBER OPTIC CABLE (72FOC)	0.484	0.0770
96-STRAND FIBER OPTIC CABLE (96FOC)	0.535	0.1050
144-STRAND FIBER OPTIC CABLE (144FOC)	0.670	0.1890
3/8" Ø MESSENGER WIRE	0.375	0.2730

NO SCALE

STANDARD DRAWING
FILE NO. xs18-010
APPROVAL DATE July 2014

STATE OF CALIFORNIA
DEPARTMENT OF TRANSPORTATION

DIVISION OF ENGINEERING SERVICES
DESIGN AND TECHNICAL SERVICES
SPECIAL DESIGNS BRANCH B

BRIDGE NO. N/A
POST MILE 30.5

TEMPORARY WOOD POLES
GENERAL NOTES

SES-1

DS OSD 2147A (ENGLISH STANDARD DRAWING "XS" BORDER REV. (02-02-11)

ORIGINAL SCALE IN INCHES FOR REDUCED PLANS 0 1 2 3

UNIT: 3619
PROJECT NUMBER & PHASE: 04000212721
CONTRACT NO.: 04-3G0804

DISREGARD PRINTS BEARING EARLIER REVISION DATES

REVISION DATES 4-14-16 4-18-16

SHEET 1 OF 7

FILE => 04-3g0801-u-misc-ses01.dgn

USERNAME => s128357 DATE PLOTTED => 19-SEP-2016 TIME PLOTTED => 13:32

DIST	COUNTY	ROUTE	POST MILES TOTAL PROJECT	SHEET No.	TOTAL SHEETS
04	Son	1	30.5	43	97

REGISTERED CIVIL ENGINEER — DATE 4-18-16

PLANS APPROVAL DATE 6-27-16

REGISTERED PROFESSIONAL ENGINEER DAVID A. NEUMANN No. C52639 Exp. 12/31/2016 CIVIL STATE OF CALIFORNIA

The State of California or its officers or agents shall not be responsible for the accuracy or completeness of scanned copies of this plan sheet.

LEGEND

- Wood Pole No Attachments
- A — Wood Pole with Attachments
- —OH— Overhead Bundle

POLE SELECTION TABLE

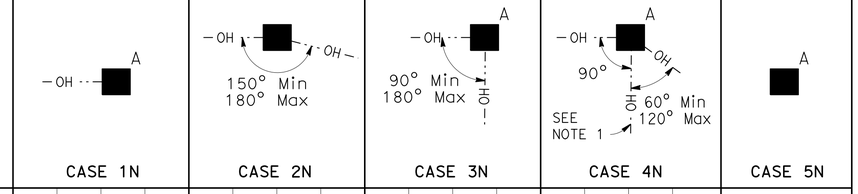

		CASE 1N				CASE 2N				CASE 3N				CASE 4N				CASE 5N
	MAXIMUM d_p	1"	1.5"	2.0"	2.5"	1"	1.5"	2.0"	2.5"	1.0"	1.5"	2.0"	2.5"	1"	1.5"	2.0"	2.5"	N/A
OVERHEAD BUNDLE HORIZONTAL SPAN (Max) 50′	MINIMUM POLE CLASS	H-1	H-2	H-2	H-2	4	3	2	1	H-2	H-2	H-3	H-3	H-4	H-4	H-4	H-5	CLASS 1 E = 10′
	POLE EMBEDMENT (E)	11′				10′				11′				12′				
100′	MINIMUM POLE CLASS	H-2	H-3	H-4	H-5	1	H-1	H-2	H-3	H-4	H-5	H-5	H-6	H-5	H-5	H-6		
	POLE EMBEDMENT (E)	12′				11′				12′				12′				
150′	MINIMUM POLE CLASS	H-4	H-5	H-6		H-1	H-2	H-3	H-5	H-6				H-6				
	POLE EMBEDMENT (E)	12′				12′				12′				12′				
200′	MINIMUM POLE CLASS	H-5	H-6			H-2	H-3	H-5										
	POLE EMBEDMENT (E)	12′				12′												

1. CCTV camera assembly or vehicle detection system
2. Overhead bundle consisting of a ⅜" ø messenger wire, overhead conductors, and lashing wire
3. Luminaire with mast arm
4. Pedestrian push button assembly or accessible push button assembly
5. Signal face with 3 indications or single sheet sign panel (10 SQFT Max)
6. Riser with weather head as required
7. Pull box as required
8. Grounding as required
9. Single flashing beacon or single sheet sign panel (4 SQFT Max)
10. Single sheet sign panel (4′ x 4′ Max) or signal face with 3 indications
11. Flashing beacon control assembly
12. NEMA 3R enclosure, 26"(W) x 56"(H) x 12"(D) Max dimensions. Max weight including batteries, 450 lbs
13. 25′ SQFT Max total photovoltaic panels mounted as shown as required
14. 2-12" flashing beacons

NOTES:

1. In addition to other restrictions on maximum horizontal span, this horizontal span must not exceed 100′.
2. Cases 1N, 3N and 4N may substitute the attachments shown in Case 5N if the photovoltaic panel is not included.
3. For Case 1N without an overhead bundle (item 2) use minimum pole class H-1 with E=11′.

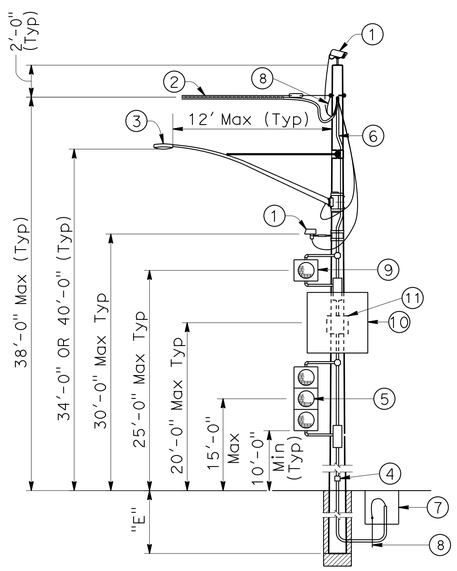

CASE 1N
POLE AT DEAD END WITH ATTACHMENTS
SEE NOTE 2

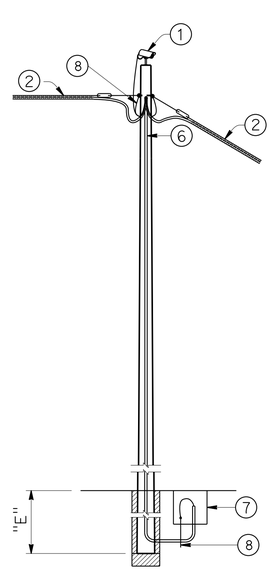

CASE 2N
POLE AT TANGENT WITHOUT ATTACHMENTS

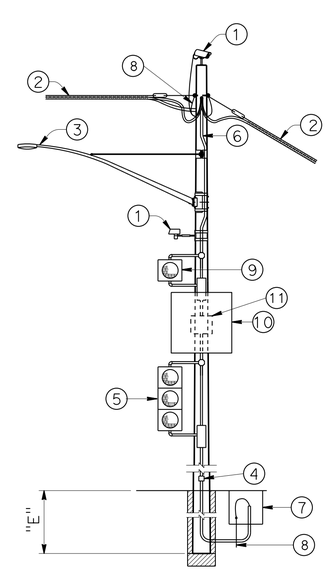

CASE 3N
POLE AT TANGENT OR CORNER WITH ATTACHMENTS
SEE NOTE 2

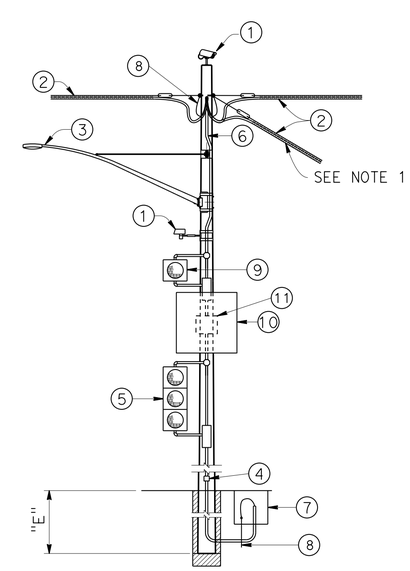

CASE 4N
POLE AT JUNCTION WITH ATTACHMENTS
SEE NOTE 2

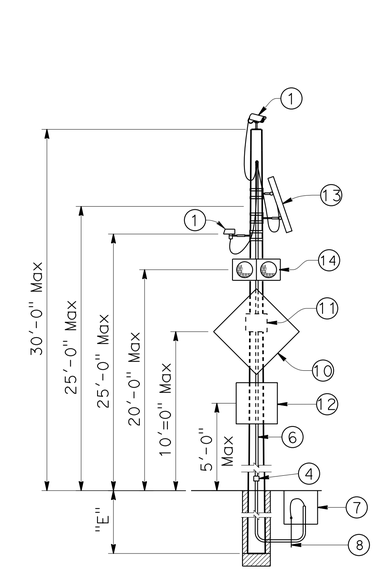

CASE 5N
POLE WITHOUT OVERHEAD BUNDLE WITH ATTACHMENTS

NO SCALE

STANDARD DRAWING

FILE NO. xs18-020 — APPROVAL DATE July 2014

STATE OF CALIFORNIA DEPARTMENT OF TRANSPORTATION

DIVISION OF ENGINEERING SERVICES DESIGN AND TECHNICAL SERVICES SPECIAL DESIGNS BRANCH B

BRIDGE NO. N/A — POST MILE 30.5

TEMPORARY WOOD POLES
NON-GUYED - NO SIGNALS ON SPANS

SES-2

DS OSD 2147A (ENGLISH STANDARD DRAWING "XS" BORDER REV. (02-02-11)

ORIGINAL SCALE IN INCHES FOR REDUCED PLANS 0 1 2 3

UNIT: 3619
PROJECT NUMBER & PHASE: 04000212721 CONTRACT NO.: 04-3G0804

DISREGARD PRINTS BEARING EARLIER REVISION DATES

REVISION DATES 4-14-16 4-18-16 — SHEET 2 OF 7

FILE => 04-3g0801-u-misc-ses02.dgn

USERNAME => s128357 DATE PLOTTED => 19-SEP-2016 TIME PLOTTED => 13:32

DIST	COUNTY	ROUTE	POST MILES TOTAL PROJECT	SHEET No.	TOTAL SHEETS
04	Son	1	30.5	44	97

REGISTERED CIVIL ENGINEER 4-18-16 DATE

6-27-16
PLANS APPROVAL DATE

REGISTERED PROFESSIONAL ENGINEER DAVID A. NEUMANN No. C52639 Exp. 12/31/2016 CIVIL STATE OF CALIFORNIA

The State of California or its officers or agents shall not be responsible for the accuracy or completeness of scanned copies of this plan sheet.

LEGEND

- A — Wood Pole with Attachments
- —OH··— Overhead Bundle
- ——→ Guy Anchor

POLE SELECTION TABLE

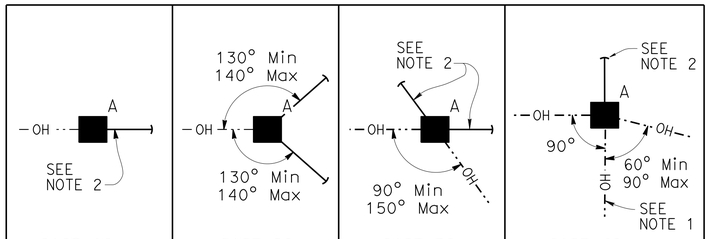

OVERHEAD BUNDLE HORIZONTAL SPAN (Max)		MAXIMUM d_p	1"	1.5"	2.0"	2.5"	1"	1.5"	2.0"	2.5"	1"	1.5"	2.0"	2.5"	1"	1.5"	2.0"	2.5"
	50′	MINIMUM POLE CLASS	H-1	H-1	H-2	H-2	1	1	1	1	1	1	1	H-1	H-2	H-2	H-3	H-3
		POLE EMBEDMENT (E)	10′				9′				9′				11′			
	100′	MINIMUM POLE CLASS	H-2	H-2	H-3	H-4	1	H-1	H-1	H-1	1	H-1	H-2	H-2	H-3	H-3	H-4	H-4
		POLE EMBEDMENT (E)	11′				9′				9′				12′			
	150′	MINIMUM POLE CLASS	H-3	H-3	H-4	H-5	H-1	H-1	H-2	H-2	H-2	H-3	H-3	H-3	H-4	H-5	H-5	H-6
		POLE EMBEDMENT (E)	11′				9′				9′				12′			
	200′	MINIMUM POLE CLASS	H-4	H-4	H-5	H-6	H-1	H-2	H-3	H-3	H-3	H-3	H-4	H-4	H-5	H-6		
		POLE EMBEDMENT (E)	11′				9′				9′				12′			

1. CCTV camera assembly or vehicle detection system
2. Overhead bundle consisting of a ⅜" ø messenger wire, overhead conductors, and lashing wire
3. Luminaire with mast arm
4. Pedestrian push button assembly or accessible push button assembly
5. Signal face with 3 indications or single sheet sign panel (10 SQFT Max)
6. Riser with weather head as required
7. Pull box as required
8. Grounding as required
9. Single flashing beacon or single sheet sign panel (4 SQFT Max)
10. Single sheet sign panel (4′ x 4′ Max) or signal face with 3 indications
11. Flashing beacon control assembly
12. ½" ø guy wire with white guy marker and strain insulator (for anchorage see "TEMPORARY WOOD POLES-DETAILS No. 2" sheet)

NOTES:

1. In addition to other restrictions on maximum horizontal span, this horizontal span must not exceed 100′.
2. Guy wire in line with opposing span ± 5°.

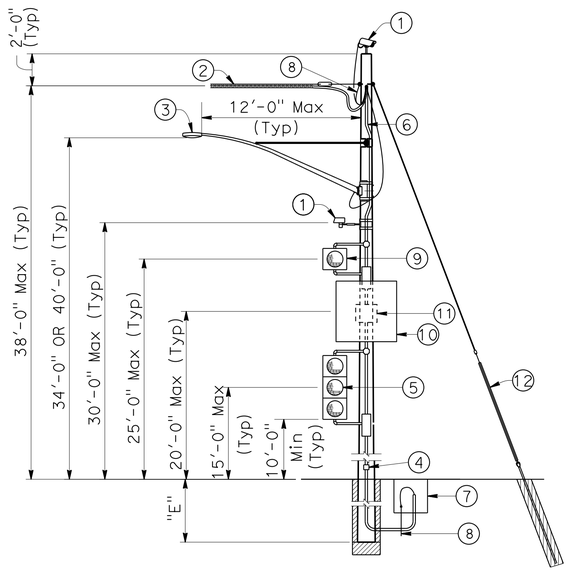

CASE 1G
POLE AT DEAD END
WITH ATTACHMENTS

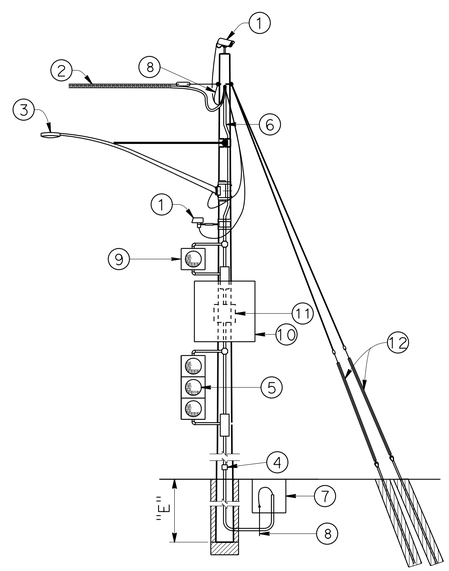

CASE 2G
POLE AT DEAD END
WITH ATTACHMENTS

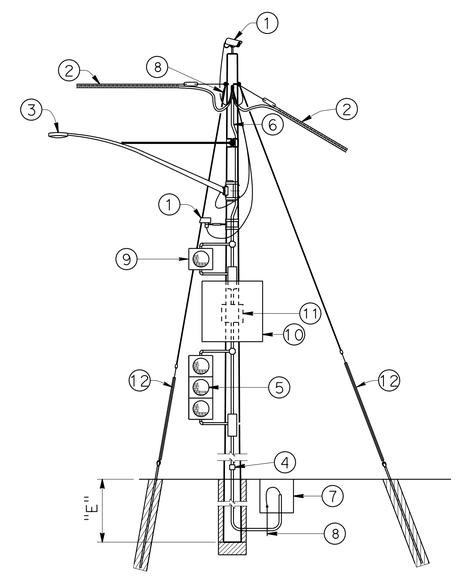

CASE 3G
POLE AT CORNER
WITH ATTACHMENTS

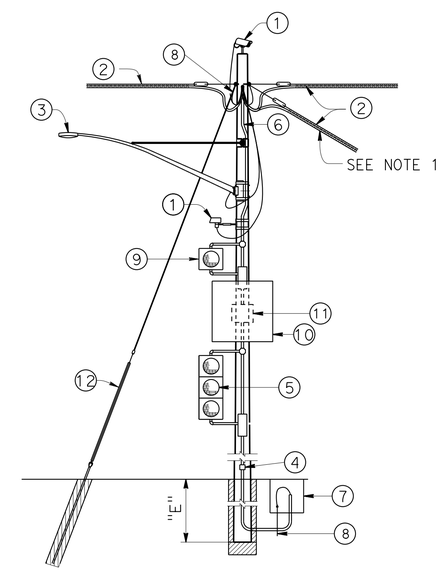

CASE 4G
POLE AT JUNCTION
WITH ATTACHMENTS

NO SCALE

STANDARD DRAWING
FILE NO. xs18-030
APPROVAL DATE July 2014

STATE OF CALIFORNIA
DEPARTMENT OF TRANSPORTATION

DIVISION OF ENGINEERING SERVICES
DESIGN AND TECHNICAL SERVICES
SPECIAL DESIGNS BRANCH B

BRIDGE NO. N/A
POST MILE 30.5

TEMPORARY WOOD POLES
GUYED - NO SIGNALS ON SPANS

SES-3

DS OSD 2147A (ENGLISH STANDARD DRAWING "XS" BORDER REV. (02-02-11)

ORIGINAL SCALE IN INCHES FOR REDUCED PLANS 0 1 2 3

UNIT: 3619
PROJECT NUMBER & PHASE: 04000212721
CONTRACT NO.: 04-3G0804

DISREGARD PRINTS BEARING EARLIER REVISION DATES

REVISION DATES 4-14-16 4-18-16

SHEET 3 OF 7

FILE => 04-3g0801-u-misc-ses03.dgn

USERNAME => s128357 DATE PLOTTED => 19-SEP-2016 TIME PLOTTED => 13:32

DIST	COUNTY	ROUTE	POST MILES TOTAL PROJECT	SHEET No.	TOTAL SHEETS
04	Son	1	30.5	45	97

REGISTERED CIVIL ENGINEER 4-18-16 DATE

PLANS APPROVAL DATE 6-27-16

The State of California or its officers or agents shall not be responsible for the accuracy or completeness of scanned copies of this plan sheet.

REGISTERED PROFESSIONAL ENGINEER DAVID A. NEUMANN No. C52639 Exp. 12/31/2016 CIVIL STATE OF CALIFORNIA

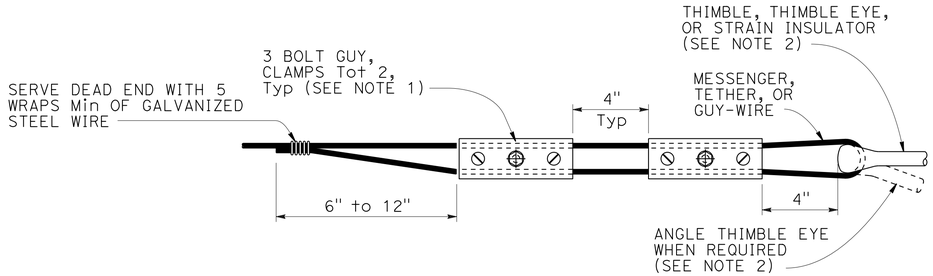

ALTERNATIVE TERMINATION OF MESSENGER WIRES USING GUY CLAMPS

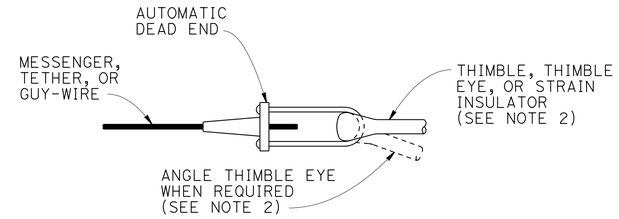

TERMINATION OF WIRES USING AUTOMATIC DEAD END

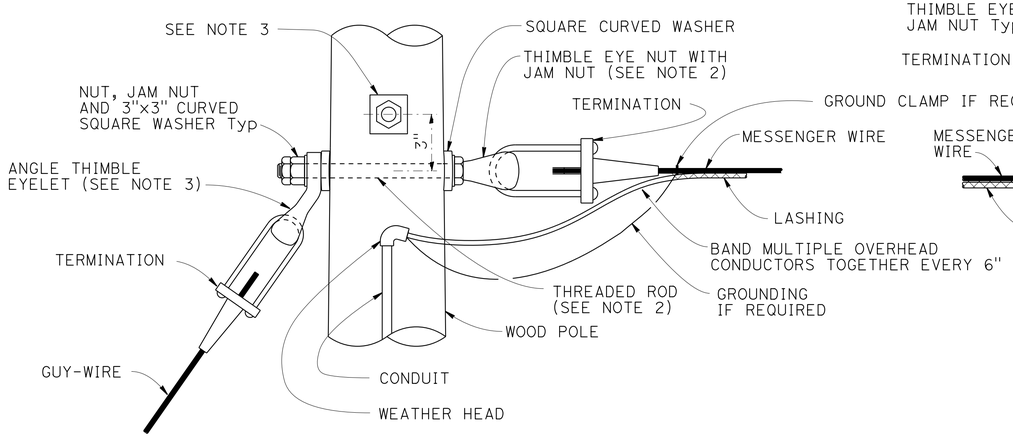

POLE AT DEAD END WITH GUY-WIRE CONNECTION

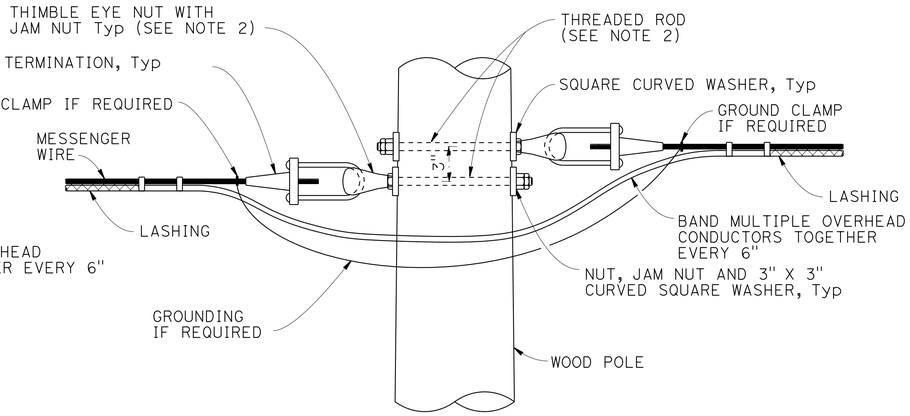

POLE AT TANGENT OR CORNER CONNECTION

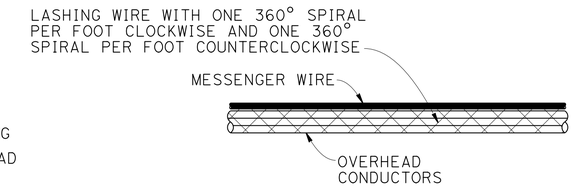

DOUBLE LASHING DETAIL

USE IF d_p IS GREATER THAN 1½"

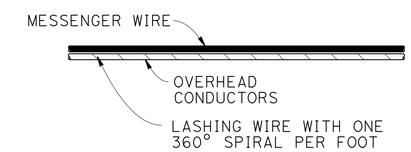

TYPICAL LASHING DETAIL

USE IF d_p IS 1½" OR LESS

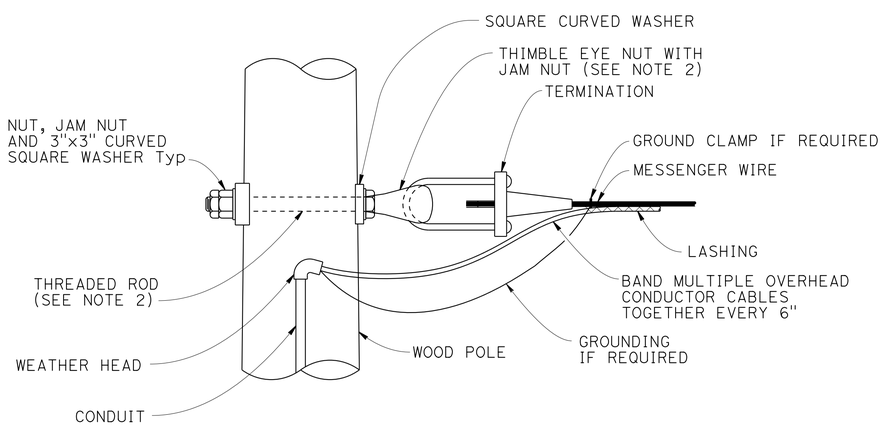

POLE AT DEAD END CONNECTION

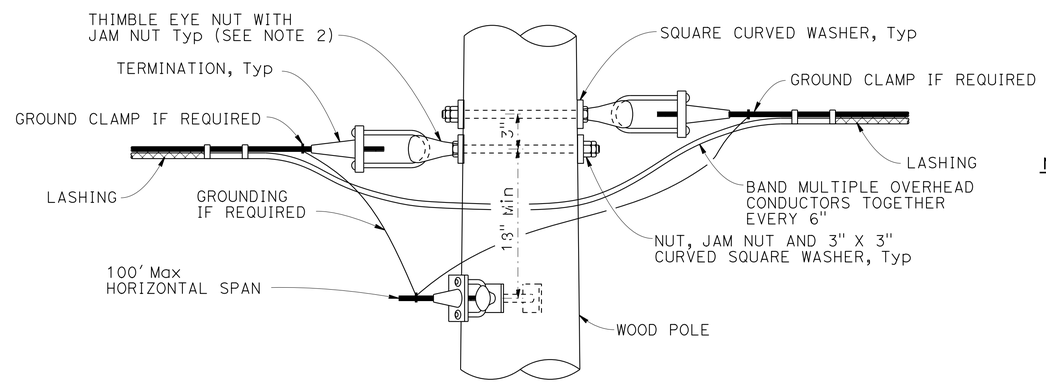

POLE AT JUNCTION CONNECTION

NOTES:

1. For guy wires use 3 clamps.
2. Use ⅝" ø except ¾" ø at guyed wires
3. Install additional angle thimble eyelet at poles with two guy wires.

STANDARD DRAWING					
FILE NO. xs18-080-1	APPROVAL DATE July 2014	STATE OF CALIFORNIA DEPARTMENT OF TRANSPORTATION	DIVISION OF ENGINEERING SERVICES DESIGN AND TECHNICAL SERVICES SPECIAL DESIGNS BRANCH B	BRIDGE NO. N/A POST MILE 30.5	TEMPORARY WOOD POLES DETAIL No. 1 — SES-4

DS OSD 2147A (ENGLISH STANDARD DRAWING "XS" BORDER REV. (02-02-11)

ORIGINAL SCALE IN INCHES FOR REDUCED PLANS 0 1 2 3

UNIT: 3619
PROJECT NUMBER & PHASE: 04000212721
CONTRACT NO.: 04-3G0804

DISREGARD PRINTS BEARING EARLIER REVISION DATES

REVISION DATES 4-14-16 4-18-16

SHEET 4 OF 7

FILE => 04-3g0801-u-misc-ses04.dgn

USERNAME => s128357 DATE PLOTTED => 19-SEP-2016 TIME PLOTTED => 13:32

DIST	COUNTY	ROUTE	POST MILES TOTAL PROJECT	SHEET No.	TOTAL SHEETS
04	Son	1	30.5	46	97

REGISTERED CIVIL ENGINEER 4-18-16 DATE

6-27-16
PLANS APPROVAL DATE

REGISTERED PROFESSIONAL ENGINEER DAVID A. NEUMANN No. C52639 Exp. 12/31/2016 CIVIL STATE OF CALIFORNIA

The State of California or its officers or agents shall not be responsible for the accuracy or completeness of scanned copies of this plan sheet.

NOTE:

1. For minimum allowable tension capacity of anchors see "Temporary Wood Poles - General Notes" sheet.

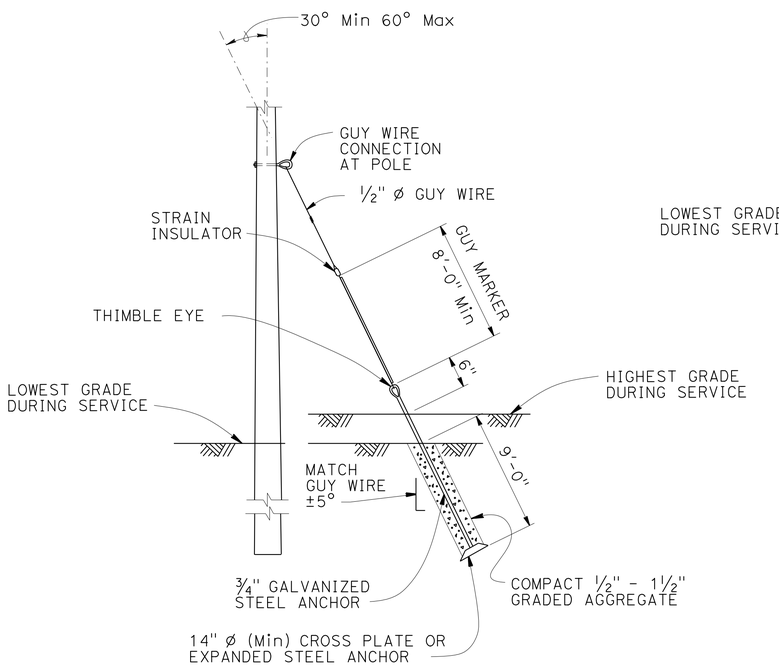

NOTE:

Helical anchor detail may be used in place of expanded steel anchors.

EXPANDED STEEL ANCHOR DETAIL

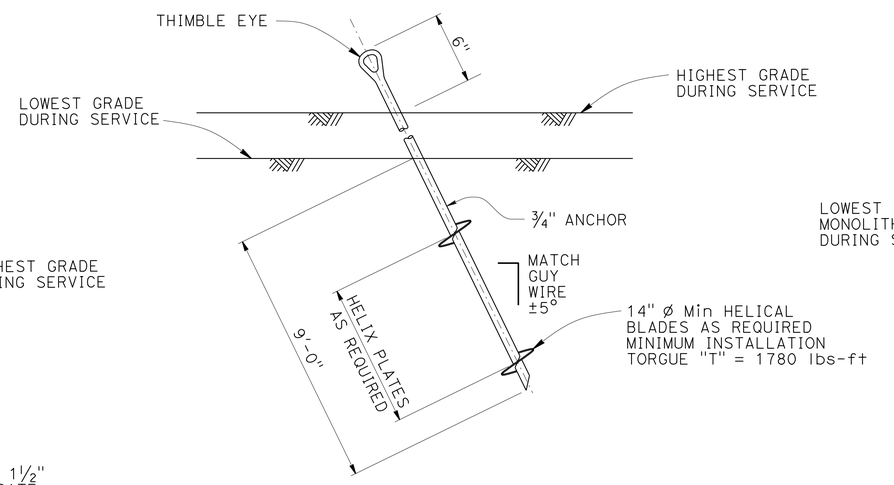

HELICAL ANCHOR DETAIL

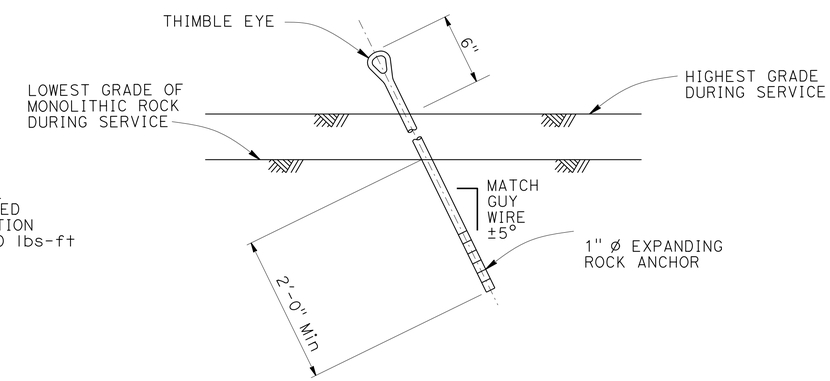

EXPANDING ROCK ANCHOR DETAIL

NO SCALE

STANDARD DRAWING		STATE OF CALIFORNIA DEPARTMENT OF TRANSPORTATION	DIVISION OF ENGINEERING SERVICES DESIGN AND TECHNICAL SERVICES SPECIAL DESIGNS BRANCH B	BRIDGE NO. N/A	TEMPORARY WOOD POLES DETAIL No. 2	SES-5
FILE NO. xs18-080-2	APPROVAL DATE July 2014			POST MILE 30.5		

DS OSD 2147A (ENGLISH STANDARD DRAWING "XS" BORDER REV. (02-02-11)

ORIGINAL SCALE IN INCHES FOR REDUCED PLANS 0 1 2 3

UNIT: 3619
PROJECT NUMBER & PHASE: 04000212721 CONTRACT NO.: 04-3G0804

DISREGARD PRINTS BEARING EARLIER REVISION DATES

REVISION DATES 4-14-16 4-18-16

SHEET 5 OF 7

FILE => 04-3g0801-u-misc-ses05.dgn

USERNAME => s128357 DATE PLOTTED => 19-SEP-2016 TIME PLOTTED => 13:32

DIST	COUNTY	ROUTE	POST MILES TOTAL PROJECT	SHEET No.	TOTAL SHEETS
04	Son	1	30.5	47	97

REGISTERED CIVIL ENGINEER — DATE 4-18-16

PLANS APPROVAL DATE 6-27-16

REGISTERED PROFESSIONAL ENGINEER DAVID A. NEUMANN No. C52639 Exp. 12/31/2016 CIVIL STATE OF CALIFORNIA

The State of California or its officers or agents shall not be responsible for the accuracy or completeness of scanned copies of this plan sheet.

NOTES:

1. Luminaire mast arms must be in compliance with Standard Plan ES-6D with noted modifications.
2. Verify pole dimensions at tie-rod attachment height. Fabricate 8" flat bar with "L" Dimension to maintain an open gap between flanges in finished installation.
3. Not all screw heads and bolt heads are shown for clarity.
4. Mast arm not shown for clarity.

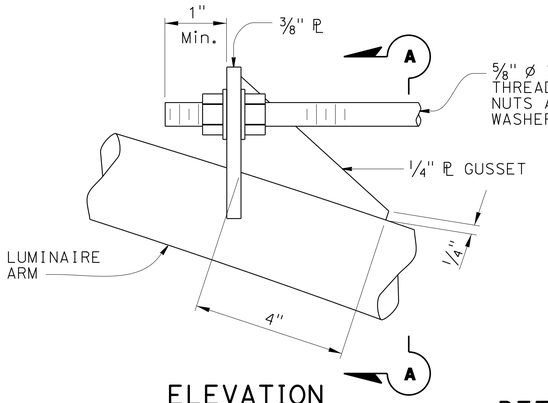

ELEVATION

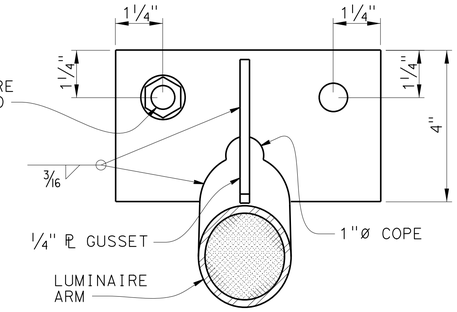

SECTION A-A

DETAIL A
TIE-ROD AT LUMINAIRE ARM
NO SCALE

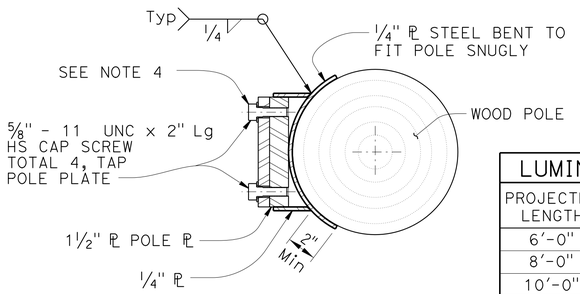

SECTION E-E

LUMINAIRE MAST ARM DATA			
PROJECTED LENGTH	N RISE	Min OD AT POLE	NOMINAL THICKNESS
6'-0"	2'-0"±	3 1/4"	0.1196"
8'-0"	2'-6"±	3 1/2"	
10'-0"	3'-3"±	3 7/8"	
12'-0"	4'-3"±		

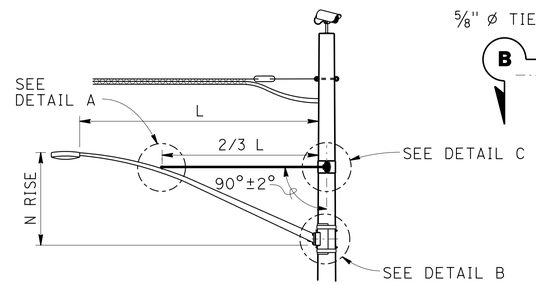

LUMINAIRE MAST ARM

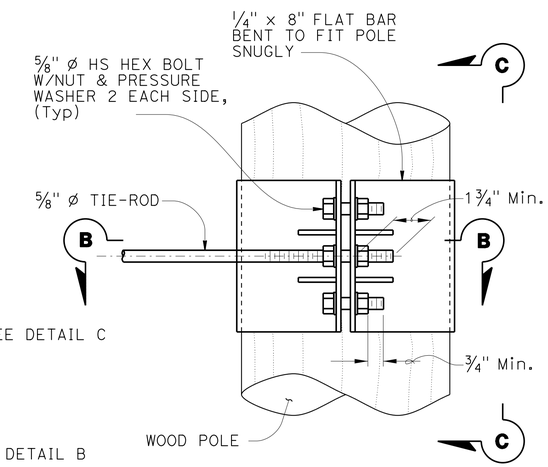

ELEVATION

NOTE:
Not all screw and bolt heads shown for clarity.

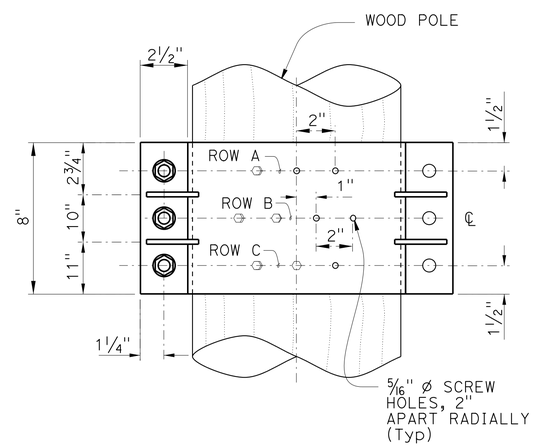

VIEW C-C

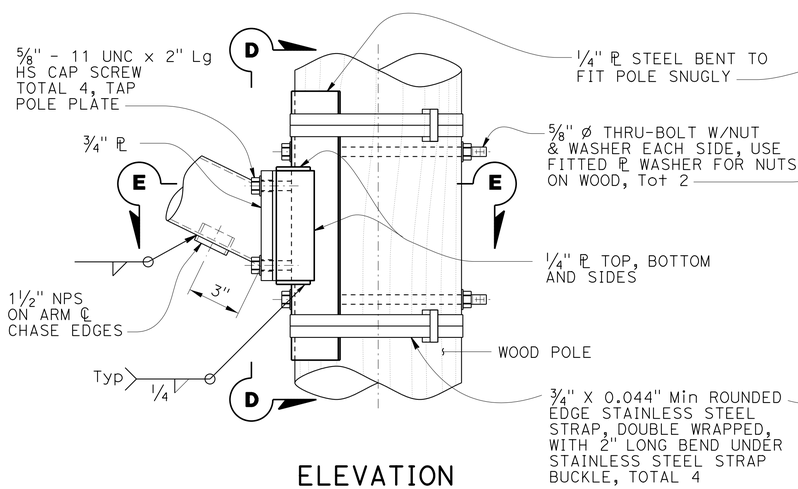

ELEVATION

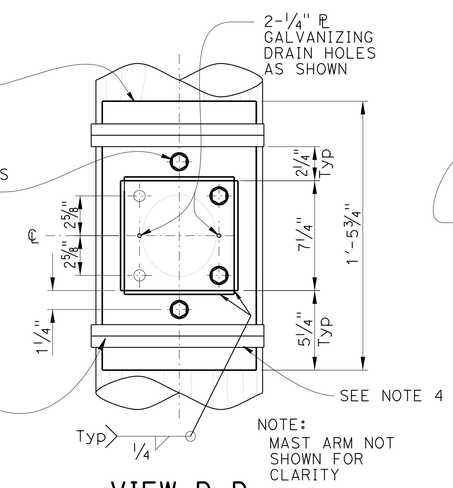

VIEW D-D

DETAIL B
ARM CONNECTION DETAILS
NO SCALE

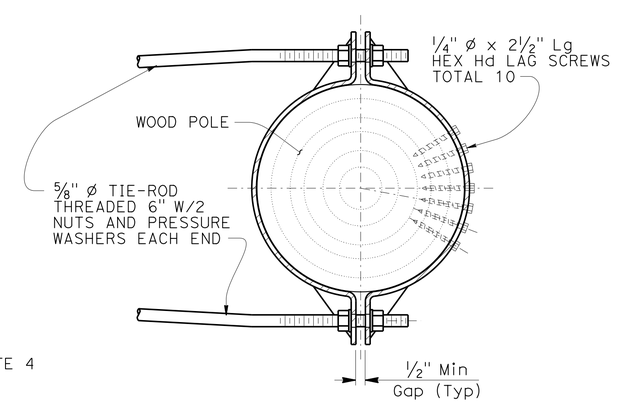

SECTION B-B

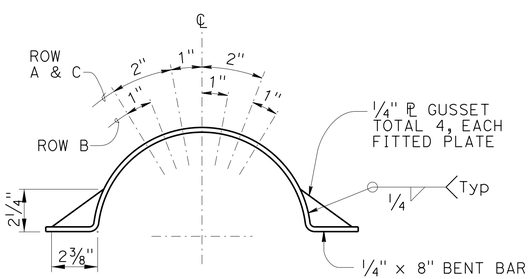

LAG SCREW AND
GUSSET PLATE LAYOUT

DETAIL C
TIE-ROD AT POLE
NO SCALE

STANDARD DRAWING					
FILE NO. xs18-080-3	APPROVAL DATE July 2014	STATE OF CALIFORNIA DEPARTMENT OF TRANSPORTATION	DIVISION OF ENGINEERING SERVICES DESIGN AND TECHNICAL SERVICES SPECIAL DESIGNS BRANCH B	BRIDGE NO. N/A POST MILE 30.5	TEMPORARY WOOD POLES DETAIL No. 3 — SES-6

DS OSD 2147A (ENGLISH STANDARD DRAWING "XS" BORDER REV. (02-02-11))

ORIGINAL SCALE IN INCHES FOR REDUCED PLANS 0 1 2 3

UNIT: 3619
PROJECT NUMBER & PHASE: 04000212721
CONTRACT NO.: 04-3G0804

DISREGARD PRINTS BEARING EARLIER REVISION DATES

REVISION DATES 4-14-16 4-18-16 — SHEET 6 OF 7

FILE => 04-3g0801-u-misc-ses06.dgn

USERNAME => s128357 DATE PLOTTED => 19-SEP-2016 TIME PLOTTED => 13:32

DIST	COUNTY	ROUTE	POST MILES TOTAL PROJECT	SHEET No.	TOTAL SHEETS
04	Son	1	30.5	48	97

REGISTERED CIVIL ENGINEER 4-18-16 DATE

6-27-16
PLANS APPROVAL DATE

REGISTERED PROFESSIONAL ENGINEER DAVID A. NEUMANN No. C52639 Exp. 12/31/2016 CIVIL STATE OF CALIFORNIA

The State of California or its officers or agents shall not be responsible for the accuracy or completeness of scanned copies of this plan sheet.

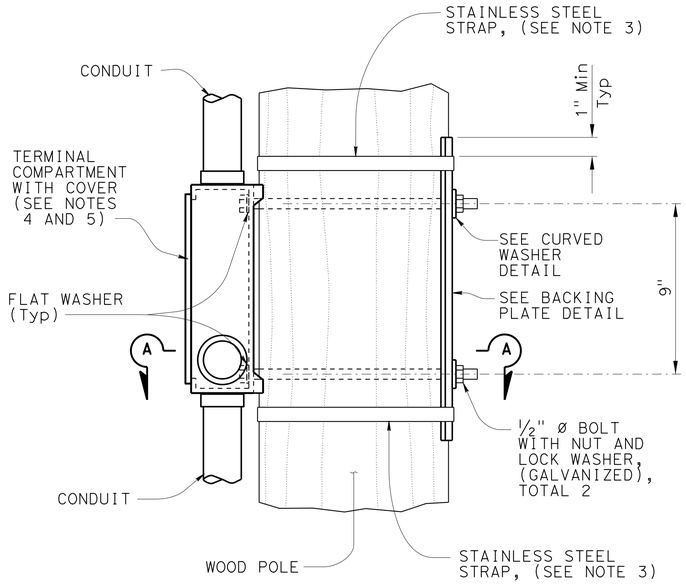

ELEVATION

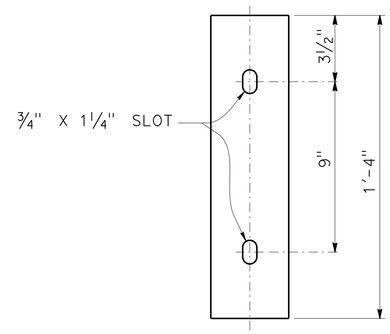

ELEVATION

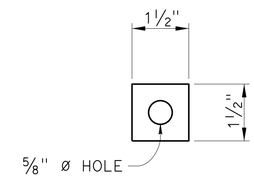

ELEVATION

PLAN

BACKING PLATE DETAIL

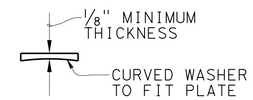

PLAN

CURVED WASHER DETAIL

NOTES:

1. Verify pole dimensions at terminal compartment for fabrication of backing plate and curved washer.
2. Backing plate to be galvanized after fabrication.
3. ¾" x 0.044" minimum, rounded edge stainless steel straps, double wrapped with 2" long bend under stainless steel strap buckle.
4. For miscellaneous details for signal mounting not shown see Standard Plan ES-4D.
5. If the terminal compartment has a cable entry guide on the rear face, remove the cable entry guide to a level that will not interfere with the wood post. Close any unused cable entry locations with raintight cap.

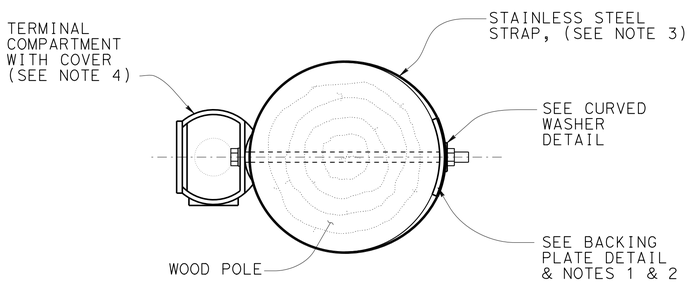

SECTION A-A

SIDE MOUNTING TERMINAL COMPARTMENT

NO SCALE

STANDARD DRAWING

FILE NO. xs18-080-4 APPROVAL DATE July 2014

STATE OF CALIFORNIA DEPARTMENT OF TRANSPORTATION

DIVISION OF ENGINEERING SERVICES DESIGN AND TECHNICAL SERVICES SPECIAL DESIGNS BRANCH B

BRIDGE NO. N/A POST MILE 30.5

TEMPORARY WOOD POLES DETAIL No. 4

SES-7

DS OSD 2147A (ENGLISH STANDARD DRAWING "XS" BORDER REV. (02-02-11)

ORIGINAL SCALE IN INCHES FOR REDUCED PLANS 0 1 2 3

UNIT: 3619
PROJECT NUMBER & PHASE: 04000212721 CONTRACT NO.: 04-3G0804

DISREGARD PRINTS BEARING EARLIER REVISION DATES

REVISION DATES 4-14-16 4-18-16

SHEET 7 OF 7

FILE => 04-3g0801-u-misc-ses07.dgn

USERNAME => s128357 DATE PLOTTED => 19-SEP-2016 TIME PLOTTED => 13:32

M

Maint	MAINTENANCE
Max	MAXIMUM
MB	METAL BEAM
MBB	METAL BEAM BARRIER
MBGR	METAL BEAM GUARD RAILING
Med	MEDIAN
MGS	MIDWEST GUARDRAIL SYSTEM
MH	MANHOLE
Min	MINIMUM
Misc	MISCELLANEOUS
Misc I & S	MISCELLANEOUS IRON AND STEEL
Mkr	MARKER
Mod	MODIFIED,
	MODIFY
Mon	MONUMENT
MP	METAL PLATE
MPGR	METAL PLATE GUARD RAILING
MR	MOVEMENT RATING
MSE	MECHANICALLY STABILIZED EMBANKMENT
Mt	MOUNTAIN, MOUNT
Mtl	MATERIAL
MVP	MAINTENANCE VEHICLE PULLOUT

N

N	NORTH
NB	NORTHBOUND
No.	NUMBER (MUST HAVE PERIOD)
Nos.	NUMBERS (MUST HAVE PERIOD)
NPS	NOMINAL PIPE SIZE
NS	NEAR SIDE
NSP	NEW STANDARD PLAN
NTS	NOT TO SCALE

O

Oblr	OBLITERATE
OC	OVERCROSSING
OD	OUTSIDE DIAMETER
OF	OUTSIDE FACE
OG	ORIGINAL GROUND
OGAC	OPEN GRADED ASPHALT CONCRETE
OGFC	OPEN GRADED FRICTION COURSE
OH	OVERHEAD
OHWM	ORDINARY HIGH WATER MARK
O-O	OUT TO OUT
Opp	OPPOSITE
OSD	OVERSIDE DRAIN

P

P	PAGE
PAP	PERFORATED ALUMINUM PIPE
PB	PULL BOX
PC	POINT OF CURVATURE,
	PRECAST
PCC	POINT OF COMPOUND CURVE,
	PORTLAND CEMENT CONCRETE
PCMS	PORTABLE CHANGEABLE MESSAGE SIGN
PCP	PERFORATED CONCRETE PIPE,
	PRESTRESSED CONCRETE PIPE
PCVC	POINT OF COMPOUND VERTICAL CURVE
PEC	PERMIT TO ENTER AND CONSTRUCT
Ped	PEDESTRIAN
Ped OC	PEDESTRIAN OVERCROSSING
Ped UC	PEDESTRIAN UNDERCROSSING
Perm Mtl	PERMEABLE MATERIAL

P continued

PG	PROFILE GRADE
PI	POINT OF INTERSECTION
PJP	PARTIAL JOINT PENETRATION
Pkwy	PARKWAY
ℙ,PL	PLATE
P/L	PROPERTY LINE
PM	POST MILE,
	TIME FROM NOON TO MIDNIGHT
PN	PAVING NOTCH
POC	POINT OF HORIZONTAL CURVE
POT	POINT OF TANGENT
POVC	POINT OF VERTICAL CURVE
PP	PIPE PILE,
	PLASTIC PIPE,
	POWER POLE
PPL	PREFORMED PERMEABLE LINER
PPP	PERFORATED PLASTIC PIPE
PRC	POINT OF REVERSE CURVE
PRF	PAVEMENT REINFORCING FABRIC
PRVC	POINT OF REVERSE VERTICAL CURVE
PS&E	PLANS, SPECIFICATIONS AND ESTIMATES
PS, P/S	PRESTRESSED
PSP	PERFORATED STEEL PIPE
PT	POINT OF TANGENCY
PVC	POLYVINYL CHLORIDE
Pvmt	PAVEMENT

Q

Qty	QUANTITY

R

R	RADIUS
R & D	REMOVE AND DISPOSE
R & S	REMOVE AND SALVAGE
R/C	RATE OF CHANGE
RCA	REINFORCED CONCRETE ARCH
RCB	REINFORCED CONCRETE BOX
RCP	REINFORCED CONCRETE PIPE
RCPA	REINFORCED CONCRETE PIPE ARCH
Rd	ROAD
Reinf	REINFORCED,
	REINFORCEMENT,
	REINFORCING
Rel	RELOCATE
Repl	REPLACEMENT
Ret	RETAINING
Rev	REVISED, REVISION
Rdwy	ROADWAY
RHMA	RUBBERIZED HOT MIX ASPHALT
Riv	RIVER
RM	ROAD-MIXED
RP	RADIUS POINT,
	REFERENCE POINT
RR	RAILROAD
RSP	ROCK SLOPE PROTECTION,
	REVISED STANDARD PLAN
Rt	RIGHT
Rte	ROUTE
RW	REDWOOD,
	RETAINING WALL
R/W	RIGHT OF WAY
Rwy	RAILWAY

S

S	SOUTH,
	SUPPLEMENT
SAE	STRUCTURE APPROACH EMBANKMENT
Salv	SALVAGE
SAPP	STRUCTURAL ALUMINUM PLATE PIPE
SB	SOUTHBOUND
SC	SAND CUSHION
SCSP	SLOTTED CORRUGATED STEEL PIPE
SD	STORM DRAIN
Sec	SECOND,
	SECTION
Sep	SEPARATION
SG	SUBGRADE
Shld	SHOULDER
Sht	SHEET
Sim	SIMILAR
℄	STATION LINE
SM	SELECTED MATERIAL
Spec	SPECIAL,
	SPECIFICATIONS
SPP	SLOTTED PLASTIC PIPE
SS	SLOPE STAKE
SSBM	STRAP AND SADDLE BRACKET METHOD
SSD	STRUCTURAL SECTION DRAIN
SSPA	STRUCTURAL STEEL PLATE ARCH
SSPP	STRUCTURAL STEEL PLATE PIPE
SSPPA	STRUCTURAL STEEL PLATE PIPE ARCH
SSRP	STEEL SPIRAL RIB PIPE
St	STREET
Sta	STATION
STBB	SINGLE THRIE BEAM BARRIER
Std	STANDARD
Str	STRUCTURE
Surf	SURFACING
SW	SIDEWALK,
	SOUND WALL
Swr	SEWER
Sym	SYMMETRICAL
S4S	SURFACE 4 SIDES

T

T	SEMI-TANGENT
Tan	TANGENT
TBB	THRIE BEAM BARRIER
Tbr	TIMBER
TC	TOP OF CURB
TCB	TRAFFIC CONTROL BOX
TCE	TEMPORARY CONSTRUCTION EASEMENT
Tel	TELEPHONE
Temp	TEMPORARY
TG	TOP OF GRADE
Tot	TOTAL
TP	TELEPHONE POLE
TPB	TREATED PERMEABLE BASE
TPM	TREATED PERMEABLE MATERIAL
Trans	TRANSITION

T continued

TS	TRANSVERSE,
	TRAFFIC SIGNAL,
	TUBULAR STEEL
Typ	TYPICAL

U

UC	UNDERCROSSING
UD	UNDERDRAIN
UG	UNDERGROUND
UON	UNLESS OTHERWISE NOTED
UP	UNDERPASS

V

V	VALVE,
	DESIGN SPEED
Var	VARIABLE,
	VARIES
VC	VERTICAL CURVE
VCP	VITRIFIED CLAY PIPE
Vert	VERTICAL
Via	VIADUCT
Vol	VOLUME

W

W	WEST,
	WIDTH
WB	WESTBOUND
WH	WEEP HOLE
WM	WIRE MESH
WS	WATER SURFACE
WSP	WELDED STEEL PIPE
Wt	WEIGHT
WV	WATER VALVE
WW	WINGWALL
WWLOL	WINGWALL LAYOUT LINE

X

X Sec	CROSS SECTION
Xing	CROSSING

Y

Yr	YEAR
Yrs	YEARS

Dist	COUNTY	ROUTE	POST MILES TOTAL PROJECT	SHEET No.	TOTAL SHEETS
04	Son	1	30.5	49	97

Grace M. Tsushima
REGISTERED CIVIL ENGINEER

July 19, 2013
PLANS APPROVAL DATE

REGISTERED PROFESSIONAL ENGINEER
Grace M. Tsushima
No. C49814
Exp. 9-30-14
CIVIL
STATE OF CALIFORNIA

THE STATE OF CALIFORNIA OR ITS OFFICERS OR AGENTS SHALL NOT BE RESPONSIBLE FOR THE ACCURACY OR COMPLETENESS OF SCANNED COPIES OF THIS PLAN SHEET.

TO ACCOMPANY PLANS DATED 6-27-16

UNIT OF MEASUREMENT SYMBOLS:

Some of the symbols used in the project plan quantity tables and in the Bid Item List are:

TABLE A

SYMBOL USED	DEFINITIONS
ACRE	ACRE
CF	CUBIC FOOT
CY	CUBIC YARD
EA	EACH
GAL	GALLON
LB	POUND
LF	LINEAR FOOT
SQFT	SQUARE FOOT
SQYD	SQUARE YARD
STA	100 FEET
TAB	TABLET
TON	2,000 POUNDS

Some of the symbols used in the plans other than in the project plan quantity tables are:

TABLE B

SYMBOL USED	DEFINITIONS
ksi	KIPS PER SQUARE INCH
ksf	KIPS PER SQUARE FOOT
psi	POUNDS PER SQUARE INCH
psf	POUNDS PER SQUARE FOOT
lb/ft^3, pcf	POUNDS PER CUBIC FOOT
tsf	TONS PER SQUARE FOOT
mph, MPH *	MILES PER HOUR
ø	NOMINAL DIAMETER
oz	OUNCE
lb	POUND
kip	1,000 POUNDS
cal	CALORIE
ft	FOOT OR FEET
gal	GALLON

* For use on a sign panel only

STATE OF CALIFORNIA
DEPARTMENT OF TRANSPORTATION

ABBREVIATIONS (SHEET 2 OF 2)

NO SCALE

RSP A10B DATED JULY 19, 2013 SUPERSEDES STANDARD PLAN A10B DATED MAY 20, 2011 - PAGE 2 OF THE STANDARD PLANS BOOK DATED 2010.

REVISED STANDARD PLAN RSP A10B

2010 REVISED STANDARD PLAN RSP A10B

6-7-13

Dist	COUNTY	ROUTE	POST MILES TOTAL PROJECT	SHEET No.	TOTAL SHEETS
04	Son	1	30.5	50	97

CERTIFIED ENGINEERING GEOLOGIST

October 30, 2015
PLANS APPROVAL DATE

REGISTERED GEOLOGIST
CHRIS A. RISDEN
CERTIFIED ENGINEERING GEOLOGIST
No. 2541
Exp. 9-30-17
STATE OF CALIFORNIA

THE STATE OF CALIFORNIA OR ITS OFFICERS OR AGENTS SHALL NOT BE RESPONSIBLE FOR THE ACCURACY OR COMPLETENESS OF SCANNED COPIES OF THIS PLAN SHEET.

TO ACCOMPANY PLANS DATED 6-27-16

REFERENCE: CALTRANS SOIL & ROCK LOGGING, CLASSIFICATION, AND PRESENTATION MANUAL (2010)

ABBREVIATION:

GWS = Ground Water Surface

CEMENTATION

DESCRIPTION	CRITERIA
WEAK	CRUMBLES OR BREAKS WITH HANDLING OR LITTLE FINGER PRESSURE.
MODERATE	CRUMBLES OR BREAKS WITH CONSIDERABLE FINGER PRESSURE.
STRONG	WILL NOT CRUMBLE OR BREAK WITH FINGER PRESSURE.

BOREHOLE IDENTIFICATION

SYMBOL	HOLE TYPE	DESCRIPTION
Size	A	AUGER BORING (HOLLOW OR SOLID STEM BUCKET)
Size	R	ROTARY DRILLED BORING (CONVENTIONAL)
	RW	ROTARY DRILLED WITH SELF-CASING WIRE-LINE
	RC	ROTARY CORE WITH CONTINUOUSLY-SAMPLED, SELF-CASING WIRE-LINE
	P	ROTARY PERCUSSION BORING (AIR)
Size	R	ROTARY DRILLED DIAMOND CORE
	RC	ROTARY DRILLED DIAMOND CORE, CONTINUOUSLY SAMPLED
Size	HD	HAND DRIVEN (1-INCH SOIL TUBE)
	HA	HAND AUGER
●	D	DYNAMIC CONE PENETRATION BORING
▲	CPT	CONE PENETRATION TEST (ASTM D 5778)
⬚	O	OTHER (NOTE ON LOTB)

Note: Size in inches.

CONSISTENCY OF COHESIVE SOILS

DESCRIPTION	SHEAR STRENGTH (tsf)	POCKET PENETROMETER MEASUREMENT, PP, (tsf)	TORVANE MEASUREMENT, TV, (tsf)	VANE SHEAR MEASUREMENT, VS, (tsf)
VERY SOFT	LESS THAN 0.12	LESS THAN 0.25	LESS THAN 0.12	LESS THAN 0.12
SOFT	0.12 - 0.25	0.25 - 0.5	0.12 - 0.25	0.12 - 0.25
MEDIUM STIFF	0.25 - 0.5	0.5 - 1	0.25 - 0.5	0.25 - 0.5
STIFF	0.5 - 1	1 - 2	0.5 - 1	0.5 - 1
VERY STIFF	1 - 2	2 - 4	1 - 2	1 - 2
HARD	GREATER THAN 2	GREATER THAN 4	GREATER THAN 2	GREATER THAN 2

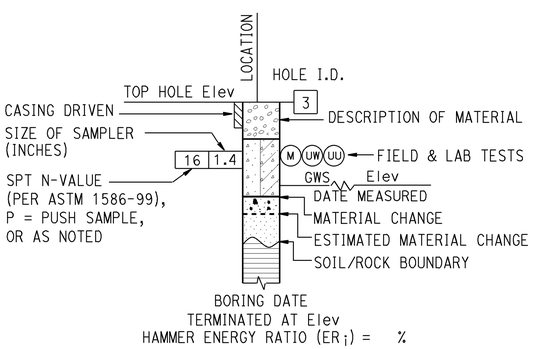

ROTARY BORING

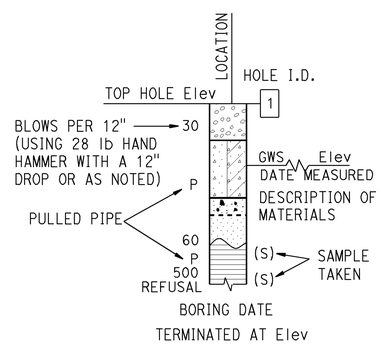

HAND BORING

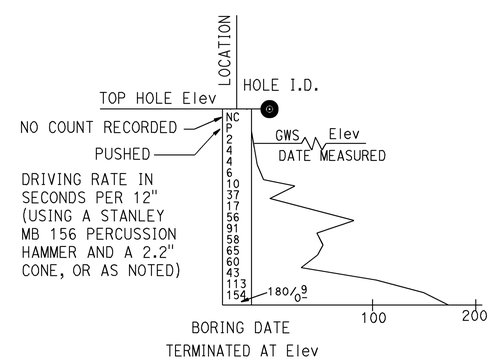

DYNAMIC CONE PENETRATION BORING

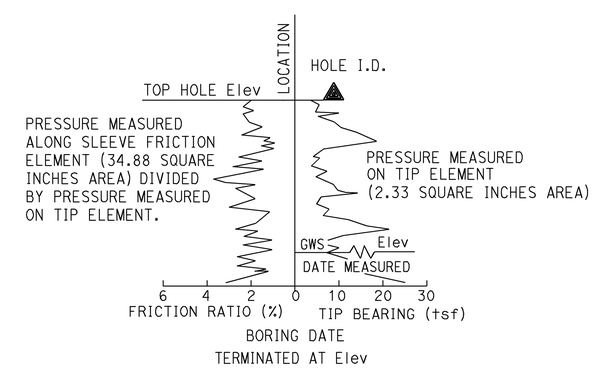

CONE PENETRATION TEST (CPT) BORING

STATE OF CALIFORNIA
DEPARTMENT OF TRANSPORTATION

LEGEND - SOIL (SHEET 1 OF 2)

NO SCALE

RSP A10F DATED OCTOBER 30, 2015 SUPERSEDES STANDARD PLAN A10F DATED MAY 20, 2011 - PAGE 6 OF THE STANDARD PLANS BOOK DATED 2010.

REVISED STANDARD PLAN RSP A10F

2010 REVISED STANDARD PLAN RSP A10F

8-18-15

REFERENCE: CALTRANS SOIL & ROCK LOGGING, CLASSIFICATION, AND PRESENTATION MANUAL (2010)

Dist	COUNTY	ROUTE	POST MILES TOTAL PROJECT	SHEET No.	TOTAL SHEETS
04	Son	1	30.5	51	97

CERTIFIED ENGINEERING GEOLOGIST

October 30, 2015
PLANS APPROVAL DATE

REGISTERED GEOLOGIST
CHRIS A. RISDEN
CERTIFIED ENGINEERING GEOLOGIST
No. 2541
Exp. 9-30-17
STATE OF CALIFORNIA

THE STATE OF CALIFORNIA OR ITS OFFICERS OR AGENTS SHALL NOT BE RESPONSIBLE FOR THE ACCURACY OR COMPLETENESS OF SCANNED COPIES OF THIS PLAN SHEET.

TO ACCOMPANY PLANS DATED 6-27-16

GROUP SYMBOLS AND NAMES

GRAPHIC/SYMBOL	GROUP NAMES	GRAPHIC/SYMBOL	GROUP NAMES
GW	WELL-GRADED GRAVEL WELL-GRADED GRAVEL WITH SAND	CL	LEAN CLAY LEAN CLAY WITH SAND LEAN CLAY WITH GRAVEL SANDY LEAN CLAY SANDY LEAN CLAY WITH GRAVEL GRAVELLY LEAN CLAY GRAVELLY LEAN CLAY WITH SAND
GP	POORLY-GRADED GRAVEL POORLY-GRADED GRAVEL WITH SAND		
GW-GM	WELL-GRADED GRAVEL WITH SILT WELL-GRADED GRAVEL WITH SILT AND SAND	CL-ML	SILTY CLAY SILTY CLAY WITH SAND SILTY CLAY WITH GRAVEL SANDY SILTY CLAY SANDY SILTY CLAY WITH GRAVEL GRAVELLY SILTY CLAY GRAVELLY SILTY CLAY WITH SAND
GW-GC	WELL-GRADED GRAVEL WITH CLAY (OR SILTY CLAY) WELL-GRADED GRAVEL WITH CLAY AND SAND (OR SILTY CLAY AND SAND)		
GP-GM	POORLY-GRADED GRAVEL WITH SILT POORLY-GRADED GRAVEL WITH SILT AND SAND	ML	SILT SILT WITH SAND SILT WITH GRAVEL SANDY SILT SANDY SILT WITH GRAVEL GRAVELLY SILT GRAVELLY SILT WITH SAND
GP-GC	POORLY-GRADED GRAVEL WITH CLAY (OR SILTY CLAY) POORLY-GRADED GRAVEL WITH CLAY AND SAND (OR SILTY CLAY AND SAND)		
GM	SILTY GRAVEL SILTY GRAVEL WITH SAND	OL	ORGANIC LEAN CLAY ORGANIC LEAN CLAY WITH SAND ORGANIC LEAN CLAY WITH GRAVEL SANDY ORGANIC LEAN CLAY SANDY ORGANIC LEAN CLAY WITH GRAVEL GRAVELLY ORGANIC LEAN CLAY GRAVELLY ORGANIC LEAN CLAY WITH SAND
GC	CLAYEY GRAVEL CLAYEY GRAVEL WITH SAND		
GC-GM	SILTY, CLAYEY GRAVEL SILTY, CLAYEY GRAVEL WITH SAND	OL	ORGANIC SILT ORGANIC SILT WITH SAND ORGANIC SILT WITH GRAVEL SANDY ORGANIC SILT SANDY ORGANIC SILT WITH GRAVEL GRAVELLY ORGANIC SILT GRAVELLY ORGANIC SILT WITH SAND
SW	WELL-GRADED SAND WELL-GRADED SAND WITH GRAVEL		
SP	POORLY-GRADED SAND POORLY-GRADED SAND WITH GRAVEL	CH	FAT CLAY FAT CLAY WITH SAND FAT CLAY WITH GRAVEL SANDY FAT CLAY SANDY FAT CLAY WITH GRAVEL GRAVELLY FAT CLAY GRAVELLY FAT CLAY WITH SAND
SW-SM	WELL-GRADED SAND WITH SILT WELL-GRADED SAND WITH SILT AND GRAVEL		
SW-SC	WELL-GRADED SAND WITH CLAY (OR SILTY CLAY) WELL-GRADED SAND WITH CLAY AND GRAVEL (OR SILTY CLAY AND GRAVEL)	MH	ELASTIC SILT ELASTIC SILT WITH SAND ELASTIC SILT WITH GRAVEL SANDY ELASTIC SILT SANDY ELASTIC SILT WITH GRAVEL GRAVELLY ELASTIC SILT GRAVELLY ELASTIC SILT WITH SAND
SP-SM	POORLY-GRADED SAND WITH SILT POORLY-GRADED SAND WITH SILT AND GRAVEL		
SP-SC	POORLY-GRADED SAND WITH CLAY (OR SILTY CLAY) POORLY-GRADED SAND WITH CLAY AND GRAVEL (OR SILTY CLAY AND GRAVEL)	OH	ORGANIC FAT CLAY ORGANIC FAT CLAY WITH SAND ORGANIC FAT CLAY WITH GRAVEL SANDY ORGANIC FAT CLAY SANDY ORGANIC FAT CLAY WITH GRAVEL GRAVELLY ORGANIC FAT CLAY GRAVELLY ORGANIC FAT CLAY WITH SAND
SM	SILTY SAND SILTY SAND WITH GRAVEL		
SC	CLAYEY SAND CLAYEY SAND WITH GRAVEL	OH	ORGANIC ELASTIC SILT ORGANIC ELASTIC SILT WITH SAND ORGANIC ELASTIC SILT WITH GRAVEL SANDY ORGANIC ELASTIC SILT SANDY ORGANIC ELASTIC SILT WITH GRAVEL GRAVELLY ORGANIC ELASTIC SILT GRAVELLY ORGANIC ELASTIC SILT WITH SAND
SC-SM	SILTY, CLAYEY SAND SILTY, CLAYEY SAND WITH GRAVEL		
PT	PEAT	OL/OH	ORGANIC SOIL ORGANIC SOIL WITH SAND ORGANIC SOIL WITH GRAVEL SANDY ORGANIC SOIL SANDY ORGANIC SOIL WITH GRAVEL GRAVELLY ORGANIC SOIL GRAVELLY ORGANIC SOIL WITH SAND
	COBBLES COBBLES AND BOULDERS BOULDERS		

FIELD AND LABORATORY TESTING

- (C) CONSOLIDATION (ASTM D2435)
- (CL) COLLAPSE POTENTIAL (ASTM D4546)
- (CP) COMPACTION CURVE (CTM 216)
- (CR) CORROSIVITY TESTING (CTM 643, CTM 422, CTM 417)
- (CU) CONSOLIDATED UNDRAINED TRIAXIAL (ASTM D4767)
- (DS) DIRECT SHEAR (ASTM D3080)
- (EI) EXPANSION INDEX (ASTM D4829)
- (M) MOISTURE CONTENT (ASTM D2216)
- (OC) ORGANIC CONTENT-% (ASTM D2974)
- (P) PERMEABILITY (CTM 220)
- (PA) PARTICLE SIZE ANALYSIS (ASTM D422)
- (PI) PLASTICITY INDEX (AASHTO T 90) LIQUID LIMIT (AASHTO T 89)
- (PL) POINT LOAD INDEX (ASTM D5731)
- (PM) PRESSURE METER
- (R) R-VALUE (CTM 301)
- (SE) SAND EQUIVALENT (CTM 217)
- (SG) SPECIFIC GRAVITY (AASHTO T 100)
- (SL) SHRINKAGE LIMIT (ASTM D4943)
- (SW) SWELL POTENTIAL (ASTM D4546)
- (UC) UNCONFINED COMPRESSION-SOIL (ASTM D2166) UNCONFINED COMPRESSION-ROCK (ASTM D7012 - METHOD C)
- (UU) UNCONSOLIDATED UNDRAINED TRIAXIAL (ASTM D2850)
- (UW) UNIT WEIGHT (ASTM D7263 - METHOD B)

APPARENT DENSITY OF COHESIONLESS SOILS

DESCRIPTION	SPT N_{60} (BLOWS / 12 INCHES)
VERY LOOSE	0 - 5
LOOSE	5 - 10
MEDIUM DENSE	10 - 30
DENSE	30 - 50
VERY DENSE	GREATER THAN 50

MOISTURE

DESCRIPTION	CRITERIA
DRY	NO DISCERNABLE MOISTURE
MOIST	MOISTURE PRESENT, BUT NO FREE WATER
WET	VISIBLE FREE WATER

PERCENT OR PROPORTION OF SOILS

DESCRIPTION	CRITERIA
TRACE	PARTICLES ARE PRESENT BUT ESTIMATED TO BE LESS THAN 5%
FEW	5% - 10%
LITTLE	15% - 25%
SOME	30% - 45%
MOSTLY	50% - 100%

PARTICLE SIZE

DESCRIPTION		SIZE
BOULDER		GREATER THAN 12"
COBBLE		3" - 12"
GRAVEL	COARSE	3/4" - 3"
	FINE	1/5" - 3/4"
SAND	COARSE	1/16" - 1/5"
	MEDIUM	1/64" - 1/16"
	FINE	1/300" - 1/64"
SILT AND CLAY		LESS THAN 1/300"

STATE OF CALIFORNIA
DEPARTMENT OF TRANSPORTATION

LEGEND - SOIL (SHEET 2 OF 2)

NO SCALE

RSP A10G DATED OCTOBER 30, 2015 SUPERSEDES STANDARD PLAN A10G DATED MAY 20, 2011 - PAGE 7 OF THE STANDARD PLANS BOOK DATED 2010.

REVISED STANDARD PLAN RSP A10G

2010 REVISED STANDARD PLAN RSP A10G

9-22-16

Dist	COUNTY	ROUTE	POST MILES TOTAL PROJECT	SHEET No.	TOTAL SHEETS
04	Son	1	30.5	52	97

REGISTERED CIVIL ENGINEER

October 30, 2015
PLANS APPROVAL DATE

REGISTERED PROFESSIONAL ENGINEER
Carl M. Duan
No. C59976
Exp. 6-30-16
CIVIL
STATE OF CALIFORNIA

THE STATE OF CALIFORNIA OR ITS OFFICERS OR AGENTS SHALL NOT BE RESPONSIBLE FOR THE ACCURACY OR COMPLETENESS OF SCANNED COPIES OF THIS PLAN SHEET.

TO ACCOMPANY PLANS DATED 6-27-16

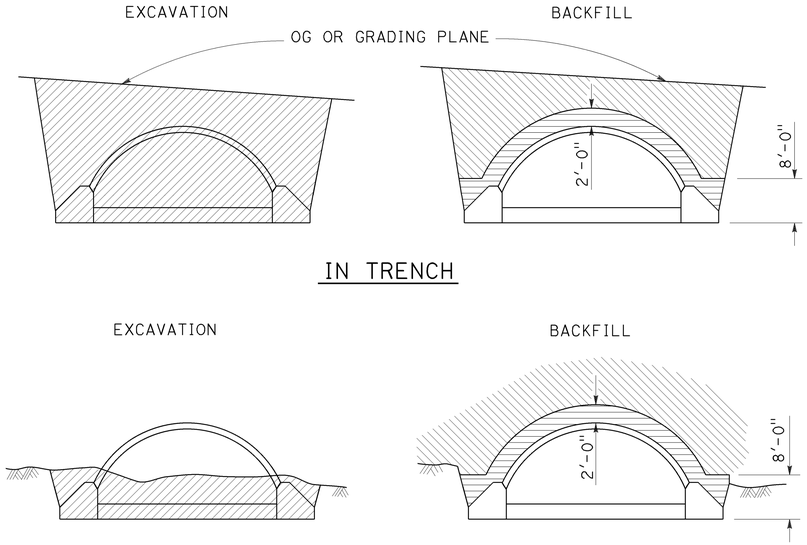

STRUCTURAL STEEL PLATE ARCHES

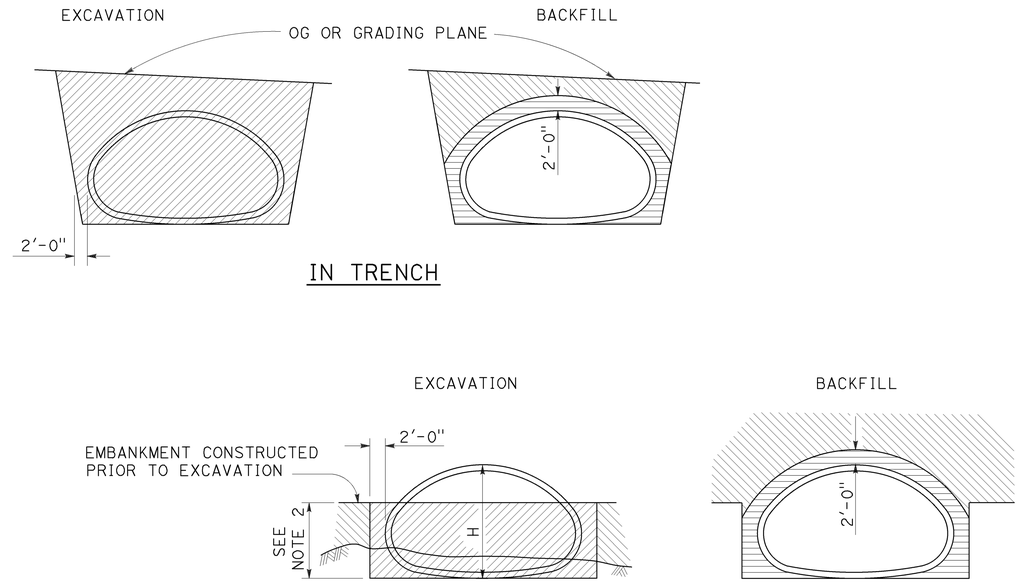

STRUCTURAL STEEL PLATE PIPE ARCHES
AND VEHICULAR UNDERCROSSING

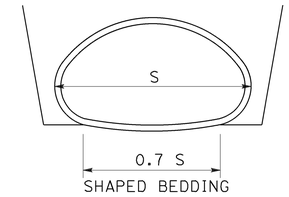

SHAPED BEDDING
S = Larger than 84"

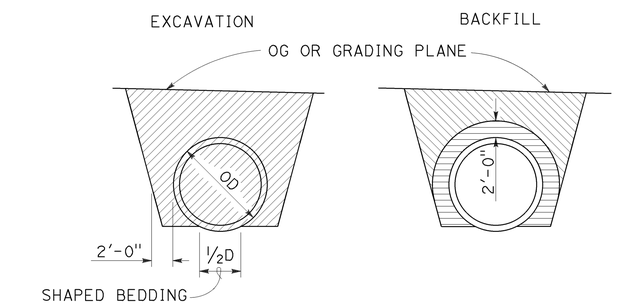

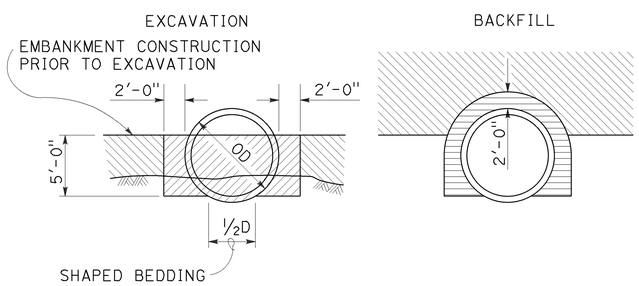

PIPES
Larger than 84"

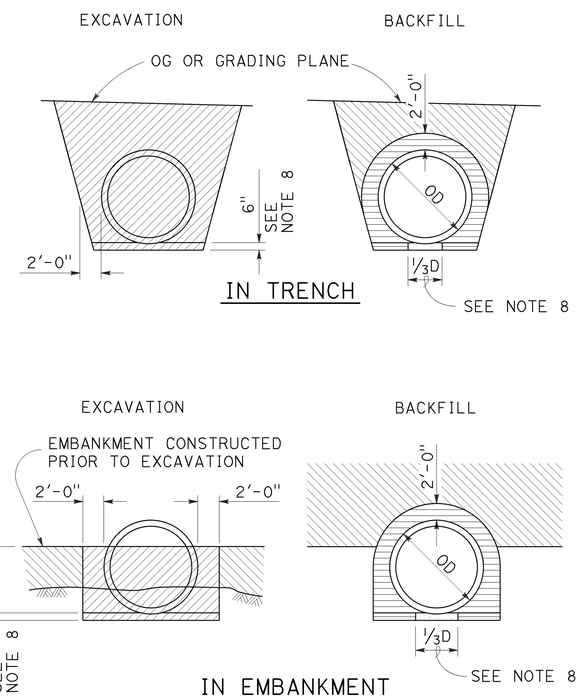

METAL AND PLASTIC PIPES AND
CORRUGATED METAL PIPE ARCHES
84" or Smaller

NOTES:

1. PIPES: 30" minimum for diameters up to and including 42" then ⅔ diameter but no more than 60" required. CORRUGATED METAL PIPE ARCHES: 30" maximum.
2. ⅔ H up to 60" maximum.
3. Slope or shore excavation sides as necessary.
4. Backfill shall be placed full width of excavation except as noted.
5. Diagrams do not apply to overside drains.
6. Dimensions shown are minimum.
7. Construction strutting of structural steel plate pipe, arches and vehicular undercrossing to be used when shown on the project plans. When shown, see Standard Plan D88A for strutting requirements.
8. Excavation below pipe and 80% relative compaction requirements for plastic pipes only.
9. D is the inside diameter (ID) of the pipe.

LEGEND

- STRUCTURE EXCAVATION (CULVERT)
- ROADWAY EMBANKMENT
- STRUCTURE BACKFILL (CULVERT) 95% RELATIVE COMPACTION
- STRUCTURE BACKFILL (CULVERT) 80% RELATIVE COMPACTION

STATE OF CALIFORNIA
DEPARTMENT OF TRANSPORTATION

EXCAVATION AND BACKFILL METAL AND PLASTIC CULVERTS

NO SCALE

RSP A62F DATED OCTOBER 30, 2015 SUPERSEDES STANDARD PLAN A62F DATED MAY 20, 2011 - PAGE 26 OF THE STANDARD PLANS BOOK DATED 2010.

REVISED STANDARD PLAN RSP A62F

2010 REVISED STANDARD PLAN RSP A62F

10-13-15

Dist	COUNTY	ROUTE	POST MILES TOTAL PROJECT	SHEET No.	TOTAL SHEETS
04	Son	1	30.5	53	97

REGISTERED CIVIL ENGINEER

January 15, 2016
PLANS APPROVAL DATE

REGISTERED PROFESSIONAL ENGINEER
Michael Janzen
No. 44788
Exp. 3-31-16
CIVIL
STATE OF CALIFORNIA

THE STATE OF CALIFORNIA OR ITS OFFICERS OR AGENTS SHALL NOT BE RESPONSIBLE FOR THE ACCURACY OR COMPLETENESS OF SCANNED COPIES OF THIS PLAN SHEET.

TO ACCOMPANY PLANS DATED 6-27-16

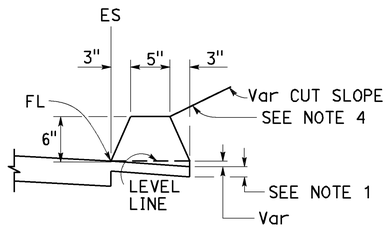

TYPE A
See Notes 3 and 5

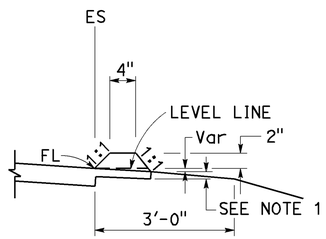

TYPE C

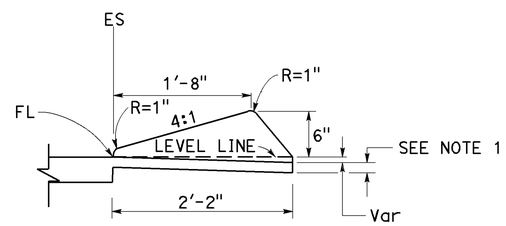

TYPE D

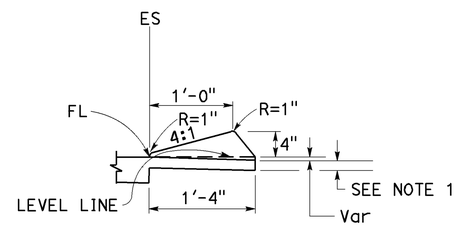

TYPE E

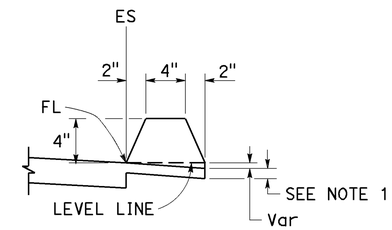

TYPE F
See Note 5

DIKES

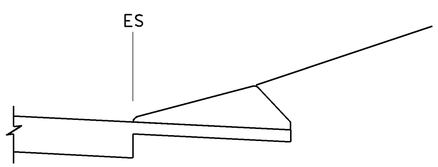

CASE C-1
Cut Slope

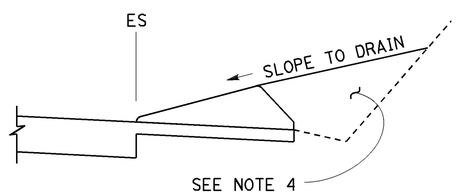

CASE C-2
Cut Slope

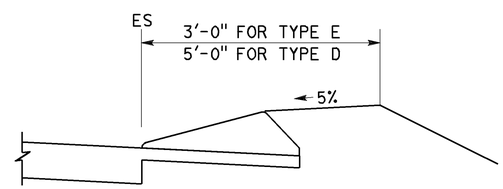

CASE F

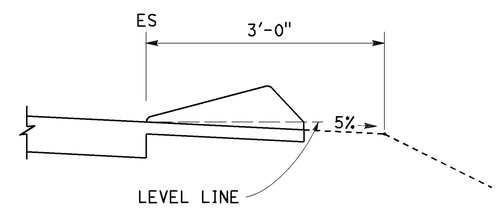

CASE R
See Note 2

TYPE D AND E BACKFILL DETAILS

NOTES:

1. For HMA shoulders only, extend top layer of HMA placed on the shoulder under dike with no joint at the ES. For projects with OGFC shoulders, do not extend OGFC under dike. See project plans for modified dike detail.
2. Case R applies to retrofit only projects where restrictive conditions do not provide enough width for Case F backfill.
3. Type A dike only to be used where restrictive slope conditions do not provide enough width to use Type D or Type E dike.
4. Fill and compact with excavated material to top of dike.
5. Use Type A or F dike, where dike is required with guardrail installations. See Revised Standard Plan RSP A77N4 for dike positioning details. See Revised Standard Plan RSP A77N3 for hinge point offsets with guardrail.

DIKE QUANTITIES

TYPE	CUBIC YARDS PER LINEAR FOOT
A	0.0135
C	0.0038
D	0.0293
E	0.0130
F	0.0066

Quantities based on 5% cross slope.

STATE OF CALIFORNIA
DEPARTMENT OF TRANSPORTATION

HOT MIX ASPHALT DIKES

NO SCALE

RSP A87B DATED JANUARY 15, 2016 SUPERSEDES RSP A87B DATED JULY 19, 2013 AND STANDARD PLAN A87B DATED MAY 20, 2011 - PAGE 120 OF THE STANDARD PLANS BOOK DATED 2010.

REVISED STANDARD PLAN RSP A87B

2010 REVISED STANDARD PLAN RSP A87B

11-17-15

Dist	COUNTY	ROUTE	POST MILES TOTAL PROJECT	SHEET No.	TOTAL SHEETS
04	Son	1	30.5	54	97

REGISTERED CIVIL ENGINEER

July 15, 2016
PLANS APPROVAL DATE

REGISTERED PROFESSIONAL ENGINEER Carl M. Duan No. C59976 Exp. 6-30-18 CIVIL STATE OF CALIFORNIA

THE STATE OF CALIFORNIA OR ITS OFFICERS OR AGENTS SHALL NOT BE RESPONSIBLE FOR THE ACCURACY OR COMPLETENESS OF SCANNED COPIES OF THIS PLAN SHEET.

TO ACCOMPANY PLANS DATED 6-27-16

NOTE:

1. For notes and Table 2, See Revised Standard Plan RSP D72C.

TABLE 1		
	T_1	Vert BARS
L_1 AND L_2 < 2'-10"	9"	#4 @ 12
L_1 OR L_2 > 2'-10"	12"	#5 @ 12

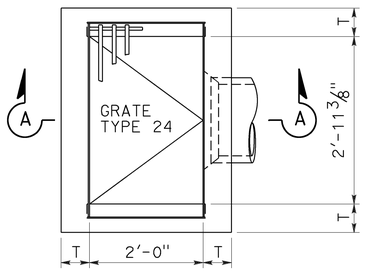

PLAN
TYPE G1

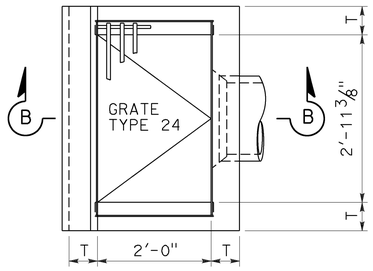

PLAN
TYPE G3

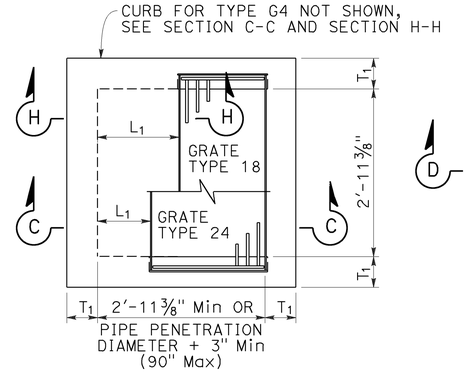

PLAN
STANDARD
TYPE G2 OR G4

FOR "L1", "L2" AND "T1" VALUES, SEE "TABLE 1"

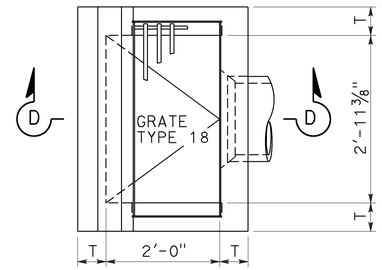

PLAN
TYPE G5

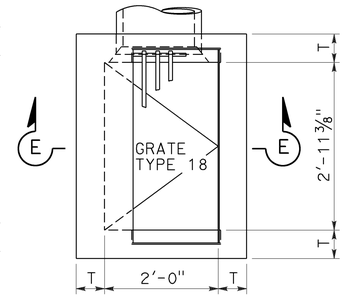

PLAN
TYPE G6

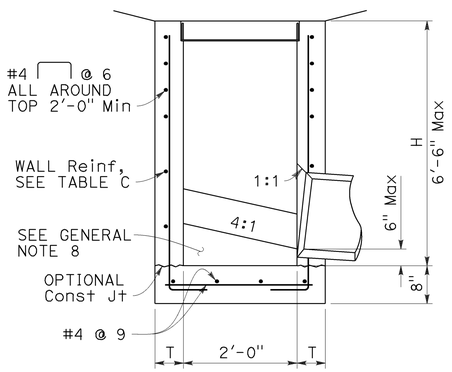

SECTION A-A

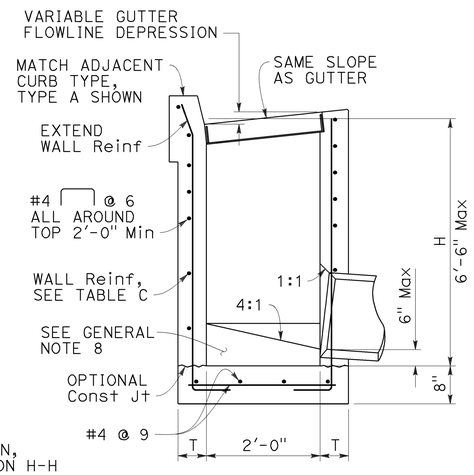

SECTION B-B

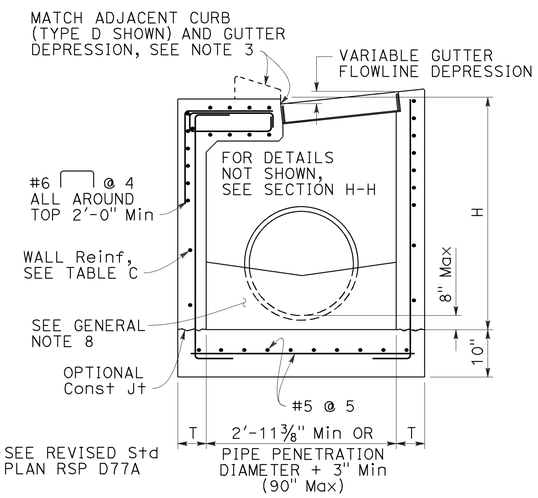

SECTION C-C

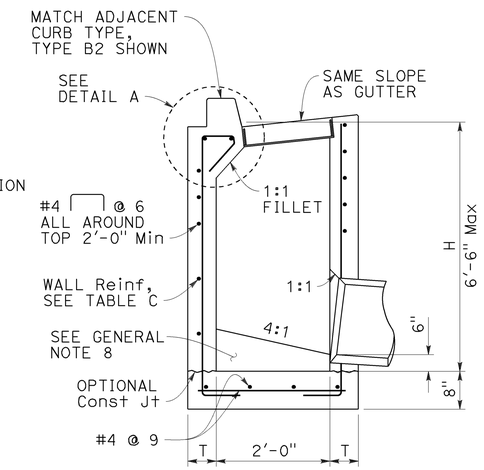

SECTION D-D

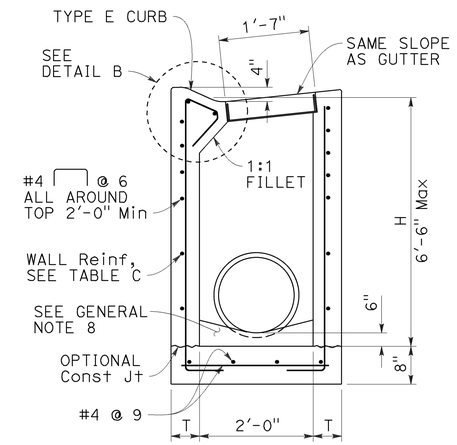

SECTION E-E

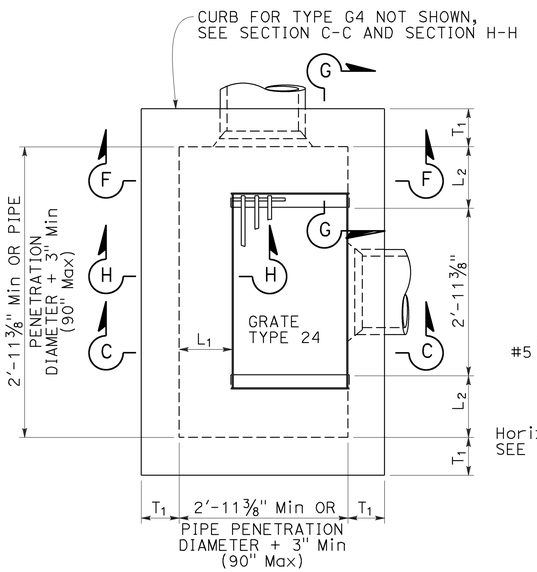

PLAN
EXPANDED
TYPE G2 OR G4

(INTEGRAL TOP ALTERNATIVE)
FOR "L" AND "T" VALUES, SEE TABLE 1

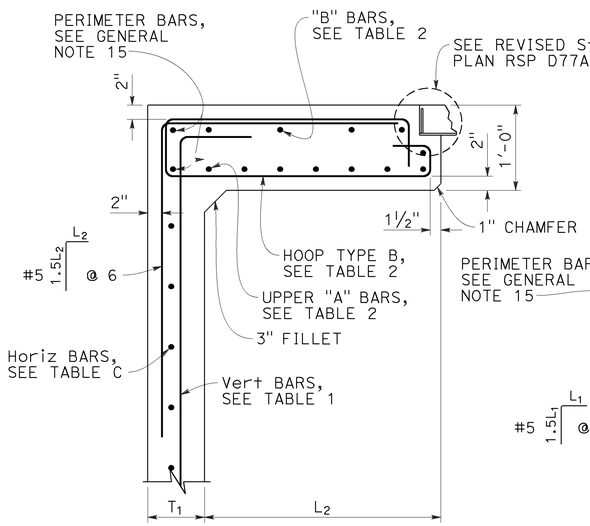

SECTION G-G

FOR "L1", "L2" AND "T1" VALUES, SEE "TABLE 1"

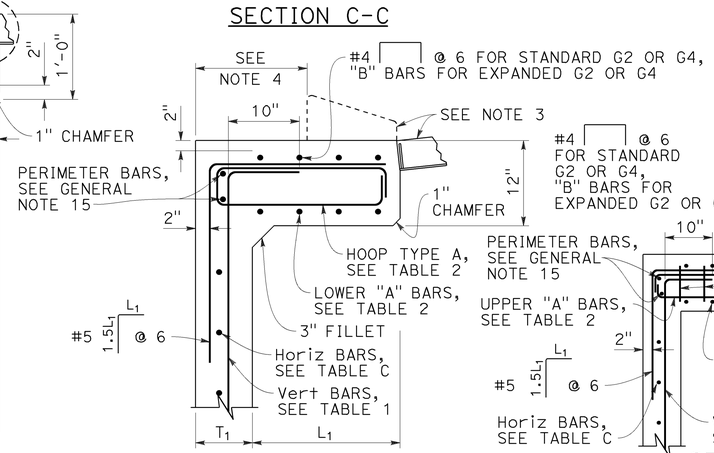

SECTION H-H

FOR "L1", "L2" AND "T1" VALUES, SEE "TABLE 1"

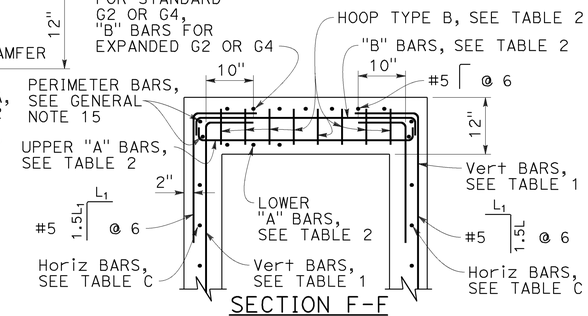

SECTION F-F

FOR "L1", "L2" AND "T1" VALUES, SEE "TABLE 1"

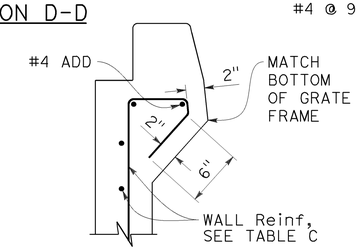

DETAIL A

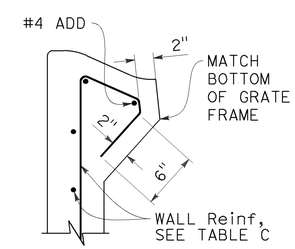

DETAIL B

STATE OF CALIFORNIA
DEPARTMENT OF TRANSPORTATION

CIP DRAINAGE INLETS TYPES G1, G2, G3, G4, G5 AND G6

NO SCALE

RSP D72A DATED JULY 15, 2016 SUPPLEMENTS THE STANDARD PLANS BOOK DATED 2010.

REVISED STANDARD PLAN RSP D72B

2010 REVISED STANDARD PLAN RSP D72B

6-20-16

Dist	COUNTY	ROUTE	POST MILES TOTAL PROJECT	SHEET No.	TOTAL SHEETS
04	Son	1	30.5	55	97

REGISTERED CIVIL ENGINEER

July 15, 2016
PLANS APPROVAL DATE

REGISTERED PROFESSIONAL ENGINEER
Carl M. Duan
No. C59976
Exp. 6-30-18
CIVIL
STATE OF CALIFORNIA

THE STATE OF CALIFORNIA OR ITS OFFICERS OR AGENTS SHALL NOT BE RESPONSIBLE FOR THE ACCURACY OR COMPLETENESS OF SCANNED COPIES OF THIS PLAN SHEET.

TO ACCOMPANY PLANS DATED 6-27-16

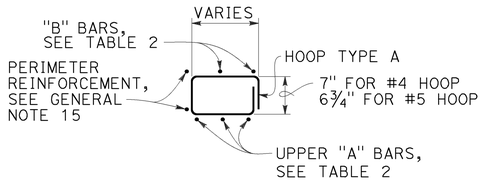

HOOP TYPE A

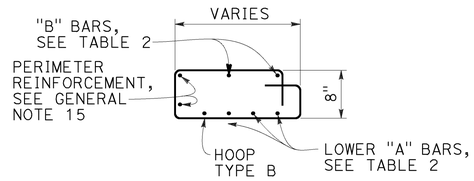

HOOP TYPE B

NOTES:

1. See Revised Standard Plan RSP D72F for General Notes and additional details. See Revised Standard Plan RSP D72G for tables and quantities.
2. Type G4 inlet can use Grate Type 18 or 24. Type G2 inlet uses Grate Type 24.
3. Type G4 inlet details are similar to Type G2 inlet details, except for the addition of a curb and sloped grate to match the adjacent curb and gutter depression.
4. Dimension will vary with different grates, curb types, box width and wall thickness.

TABLE 2 - TOP SLAB REINFORCEMENT

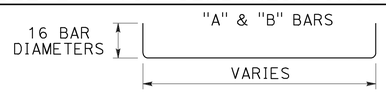

	W/ CURB	W/O CURB
"A" BARS	#4 @ 5 (2 BARS Min)	#5 @ 5 (3 BARS Min)
"B" BARS	#4 @ 10 (2 BARS Min)	#4 @ 12 (2 BARS Min)
HOOPS ("A" & "B")	#4 @ 5	#5 @ 5

ROTATE "A" AND "B" BARS SO HOOKED ENDS WILL MAINTAIN 2" CLEAR COVERAGE.

STATE OF CALIFORNIA
DEPARTMENT OF TRANSPORTATION

CIP DRAINAGE INLETS TYPES G1, G2, G3, G4, G5 AND G6

NO SCALE

RSP D72C DATED JULY 15, 2016 SUPPLEMENTS THE STANDARD PLANS BOOK DATED 2010.

REVISED STANDARD PLAN RSP D72C

2010 REVISED STANDARD PLAN RSP D72C

6-20-16

Dist	COUNTY	ROUTE	POST MILES TOTAL PROJECT	SHEET No.	TOTAL SHEETS
04	Son	1	30.5	56	97

REGISTERED CIVIL ENGINEER

July 15, 2016
PLANS APPROVAL DATE

REGISTERED PROFESSIONAL ENGINEER
Carl M. Duan
No. C59976
Exp. 6-30-18
CIVIL
STATE OF CALIFORNIA

THE STATE OF CALIFORNIA OR ITS OFFICERS OR AGENTS SHALL NOT BE RESPONSIBLE FOR THE ACCURACY OR COMPLETENESS OF SCANNED COPIES OF THIS PLAN SHEET.

TO ACCOMPANY PLANS DATED 6-27-16

GENERAL NOTES:

1. "H" is measured from top of bottom slab to the normal gutter grade line undepressed at the curb face.
2. For "T" wall thickness and reinforcement, see Table C on Revised Standard Plan RSP D72G.
3. Wall reinforcement must be placed in the center of the wall thickness with horizontal bars placed on the exterior face. Bottom slab concrete cover must be 3" clear on the interior face unless otherwise noted. Top slab concrete cover must be 2" clear on the exterior face unless otherwise noted. Reinforcement spacing is in inches unless otherwise noted.
4. Steps - None required where "H" is less than 2'-6". Where "H" is 2'-6" or more, install steps with lowest rung 1'-0" above the floor and highest rung not more than 6" below bottom of lid. The distance between steps must not exceed 1'-0" and be uniform throughout the length of the wall. Place steps in the wall without an opening. Steps inserts may be substituted for the bar steps. Step inserts must comply with State Industrial Safety Requirements. See Revised Standard Plan RSP D74 for step details.
5. Pipe(s) can be placed in any wall. Adjacent to each side of the opening, place additional reinforcement equivalent to half the interupted main reinforcement. For larger pipes greater than or equal to 42" diameter, also add 4 diagonal bars, 1 bar each side. Bars must be the same size as the larger of the main vertical or horizontal bars. Extend bars one development length past the intersection with the adjacent diagonal bar, or where bars intersect mid thickness of adjacent wall bottom or top of non-continuous wall, bend ends as required into same plane.
6. Set inlet so that grate bars are parallel to direction of principal surface flow.
7. Curb section must match adjacent curb.
8. Except for inlets used as junction boxes, basin floors must have wood trowel finish and a minimum slope of 4:1, unless otherwise noted, from all directions toward outlet pipe by casting grout fill on top of the bottom slab. The additional volume to achieve the 4:1 slope may also be achieved by casting the bottom slab and fill as a composite concrete element.
9. See Revised Standard Plans RSP D77A and RSP D77B for grate and frame details and weights of miscellaneous iron and steel.
10. See Standard Plans D78A and D78B for gutter depression details.
11. See Revised Standard Plans RSP A87A and RSP A87B for curb and dike details.
12. Details shown apply to metal, concrete and plastic pipe(s).
13. The Contractor may use WWR instead of bar reinforcement. The ratio of bar reinforcement to WWR shall be based on the yield strength ratio.
14. Cast-in-place (CIP) inlets to be formed around all pipes/stubs intersecting the inlet, and concrete poured in one continuous operation.
15. Perimeter reinforcement must not be smaller than main bars and #4 and serves as a rigid frame to position and attach the required structural reinforcement and may be tack welded at outer corners when using ASTM A706 weldable bars.

DESIGN NOTES:

1. Design Specifications: AASHTO LRFD Bridge Design Specifications, 6th edition with 2012 Interims and Errata and CA Amendments.
2. Live Load (AASHTO LRFD 3.6.1.2):
   HL-93, consists of design truck or tandem, and design lane load.
   Dynamic Load Allowance, IM = 33%
   Multiple Presence Factor, m = 1.0
   Design lane load was excluded in Top Slab design.
   A wheel load of 8 kips without impact factor was used for top slabs that are above a curb.
3. Earth Load:
   Vertical pressure = 140 pcf
   Lateral pressure:
   = 100 pcf for walls with flat embankment
   = 140 pcf For walls with slope embankment, 1.5:1 Max
4. Downdrag: ϕ = 34° and γ_E = 120 pcf.
5. Buoyancy: γ_W = 62.4 pcf to finished grade
6. Reinforced Concrete: f'c = 3.6 ksi, fy = 60.0 ksi.
7. Soil pressures shown are factored per AASHTO LRFD and include self-weight, live load and downdrag.

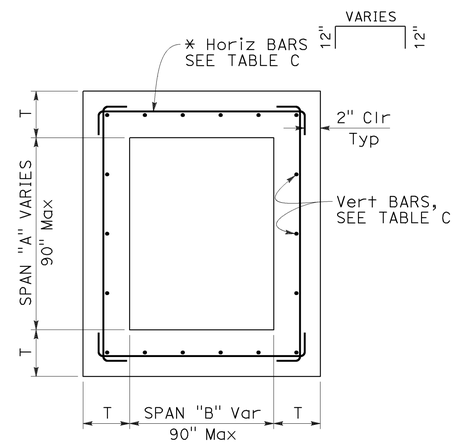

TYPICAL INLET PLAN

* ALTERNATIVE HORIZONTAL BARS

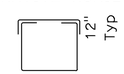

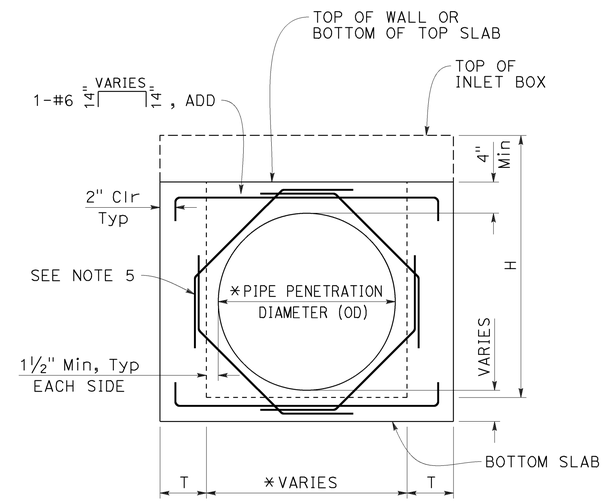

TYPICAL WALL
W/ PIPE OPENING

* SEE "SKEWED PIPE PLAN"

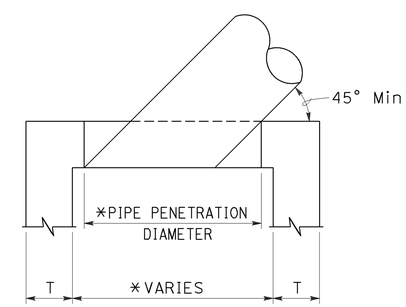

SKEWED PIPE PLAN

* ADJUST PIPE PENETRATION AND BOX WIDTH FOR SKEWED PIPES.

STATE OF CALIFORNIA
DEPARTMENT OF TRANSPORTATION

CIP DRAINAGE INLET NOTES

NO SCALE

RSP D72F DATED JULY 15, 2016 SUPPLEMENTS THE STANDARD PLANS BOOK DATED 2010.

REVISED STANDARD PLAN RSP D72F

2010 REVISED STANDARD PLAN RSP D72F

6-20-16

Dist	COUNTY	ROUTE	POST MILES TOTAL PROJECT	SHEET No.	TOTAL SHEETS
04	Son	1	30.5	57	97

REGISTERED CIVIL ENGINEER

July 15, 2016
PLANS APPROVAL DATE

REGISTERED PROFESSIONAL ENGINEER
Carl M. Duan
No. C59976
Exp. 6-30-18
CIVIL
STATE OF CALIFORNIA

THE STATE OF CALIFORNIA OR ITS OFFICERS OR AGENTS SHALL NOT BE RESPONSIBLE FOR THE ACCURACY OR COMPLETENESS OF SCANNED COPIES OF THIS PLAN SHEET.

TO ACCOMPANY PLANS DATED 6-27-16

TABLE A - CONCRETE QUANTITIES

TYPE	H=3'-0" TO 8'-0"		H=8'-1" TO 20'-0"	
	H=3'-0" (CY)	ADDITIONAL CONCRETE PER FOOT (CY)	H=8'-1" (CY)	ADDITIONAL CONCRETE PER FOOT (CY)
G1	0.95	0.220	SEE NOTE 2	SEE NOTE 2
G2*	2.00	0.411	5.11	0.525
G3	1.03	0.220	SEE NOTE 2	SEE NOTE 2
G4 (TYPE 18)*	2.02	0.411	5.14	0.525
G4 (TYPE 24)*	1.99	0.411	5.10	0.525
G5	1.02	0.220	SEE NOTE 2	SEE NOTE 2
G6	1.04	0.220	SEE NOTE 2	SEE NOTE 2
OS	1.53	0.278	5.08	0.504
OL7	2.06	0.278	6.17	0.566
OL10	2.85	0.278	6.85	0.566
OL14	3.81	0.278	7.78	0.566
OL21	5.71	0.278	9.62	0.566
GOL7	2.48	0.313	6.89	0.630
GOL10	3.41	0.313	7.85	0.630
GT1	1.72	0.248	SEE NOTE 2	SEE NOTE 2
GT2	2.93	0.530	7.73	0.762
GT3	1.74	0.348	SEE NOTE 2	SEE NOTE 2
GT4	2.83	0.530	7.62	0.762
GO	1.26	0.245	4.90	0.506
GDO	1.74	0.322	6.33	0.647

* Quantities are based on the minimum interior dimensions.

TABLE B - REINFORCEMENT QUANTITIES

TYPE	H=3'-0" TO 8'-0"		H=8'-1" TO 20'-0"	
	H=3'-0" (LB)	ADDITIONAL REINFORCEMENT PER FOOT (LB)	H=8'-1" (LB)	ADDITIONAL REINFORCEMENT PER FOOT (LB)
G1	118	22.20	SEE NOTE 2	SEE NOTE 2
G2*	729	86.48	1794	171.79
G3	118	22.20	SEE NOTE 2	SEE NOTE 2
G4 (TYPE 18)*	647	86.48	1675	171.79
G4 (TYPE 24)*	647	86.48	1675	171.79
G5	118	22.20	SEE NOTE 2	SEE NOTE 2
G6	118	22.20	SEE NOTE 2	SEE NOTE 2
OS	245	49.88	1057	120.77
OL7	458	50.53	1324	126.75
OL10	729	50.53	1595	126.75
OL14	982	50.53	1849	126.75
OL21	1453	50.53	2320	126.75
GOL7	644	83.57	1969	148.79
GOL10	883	83.57	2208	148.79
GT1	486	96.91	SEE NOTE 2	SEE NOTE 2
GT2	1040	117.08	2543	233.37
GT3	486	96.91	SEE NOTE 2	SEE NOTE 2
GT4	1001	117.08	2556	237.88
GO	308	32.44	1013	96.56
GDO	519	57.09	1654	165.66

* Quantities are based on the minimum interior dimensions.

TABLE D

INLET	CURB USED IN QUANTITIES
G1	-
G2	-
G3	A1-6
G4 (Type 18)	A1-6
G4 (Type 24)	A1-6
G5	B1-4
G6	½E
OS	-
OL7	-
OL10	-
OL14	-
OL21	-
GOL7	-
GOL10	-
GT1	D-6
GT2	E
GT3	A2-8
GT4	A2-8
GO	-
GDO	-

TABLE C - WALL REINFORCEMENT

TYPE	H≤8 (T=6",UON)		8<H≤20 (T=11",UON)	
	HORIZ	VERTICAL	HORIZ	VERTICAL
OS	#4 @ 8	#4 @ 6	#5 @ 6	#6 @ 4.5
OL	#4 @ 6	#4 @ 6	#5 @ 6	#6 @ 4.5
GOL	#5 @ 6	#5 @ 8	#6 @ 5	#6 @ 4.5
G1 (H≤6-6")	#3 @ 6	#3 @ 6	-	-
G2	T=9" #5 @ 5	#5 @ 5	T=11" #6 @ 4	#6 @ 4.5
G3 (H≤6-6")	#3 @ 6	#3 @ 6	-	-
G4	T=9" #5 @ 5	#5 @ 5	T=11" #6 @ 4	#6 @ 4.5
G5 (H≤6-6")	#3 @ 6	#3 @ 6	-	-
G6 (H≤6-6")	#3 @ 6	#3 @ 6	-	-
GT1 (H≤6-6")	#5 @ 6	#5 @ 6	-	-
GT2	T=8" #5 @ 6	#5 @ 6	#6 @ 4	#6 @ 4.5
GT3 (H≤6-6")	#5 @ 6	#5 @ 6	-	-
GT4	T=8" #5 @ 6	#5 @ 6	#6 @ 4	#6 @ 4.5
GO	#4 @ 9	#4 @ 6	#4 @ 6	#6 @ 4.5
GDO	#4 @ 6	#4 @ 6	#5 @ 4	#6 @ 4.5

TABLE E

SOIL PRESSURE BELOW BASE SLAB (ksf)		
TYPE	H=8'-0"	8'-0"< H ≤20'-0"
OS	2.93	5.56
OL*	2.93	5.56
GOL*	2.50	5.06
G1	3.67	-
G2	2.99	5.91
G3	3.67	-
G4	2.99	5.91
G5	3.67	-
G6	3.67	-
GT1	3.66	-
GT2	3.91	6.07
GT3	3.86	-
GT4	3.91	6.07
GO	3.42	6.11
GDO	2.52	6.95

* Main Box

NOTES:

1. No deduction or adjustment was made to the quantities of concrete and reinforcement for pipe openings, floor alternatives or curb type.
2. Maximum allowable height is 6'-6".
3. Quantities are approximate and for design purposes only.
4. Design is based on envelope of level and sloped ground.

STATE OF CALIFORNIA
DEPARTMENT OF TRANSPORTATION

CIP DRAINAGE INLET TABLES

NO SCALE

RSP D72G DATED JULY 15, 2016 SUPPLEMENTS THE STANDARD PLANS BOOK DATED 2010.

REVISED STANDARD PLAN RSP D72G

2010 REVISED STANDARD PLAN RSP D72G

6-20-16

Dist	COUNTY	ROUTE	POST MILES TOTAL PROJECT	SHEET No.	TOTAL SHEETS
04	Son	1	30.5	58	97

REGISTERED CIVIL ENGINEER

July 15, 2016
PLANS APPROVAL DATE

REGISTERED PROFESSIONAL ENGINEER
Carl M. Duan
No. C59976
Exp. 6-30-18
CIVIL
STATE OF CALIFORNIA

THE STATE OF CALIFORNIA OR ITS OFFICERS OR AGENTS SHALL NOT BE RESPONSIBLE FOR THE ACCURACY OR COMPLETENESS OF SCANNED COPIES OF THIS PLAN SHEET.

TO ACCOMPANY PLANS DATED 6-27-16

2010 REVISED STANDARD PLAN RSP D74

FACE ANGLE DETAIL "A"	
LENGTH OF CURB OPENING	No. OF ANCHORS
3'-6" OR LESS	2
7'-0"	3
10'-0"	4
14'-0"	5
21'-0"	7

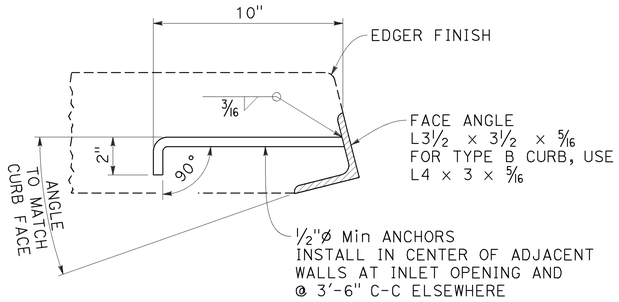

DETAIL "A"

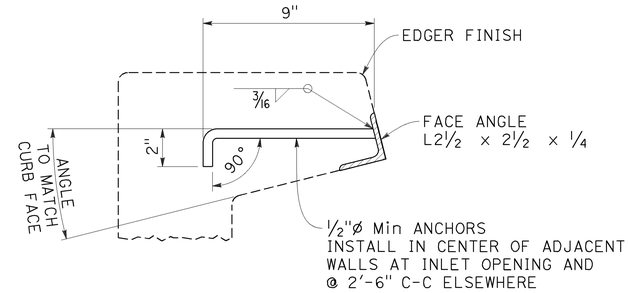

DETAIL "B"

FACE ANGLE AND ANCHOR

NOTE:

1. When shown on the project plans, place a ¾"ø plain round protection bar horizontally across the length of the opening and bend back 4" into the inlet wall on each side.

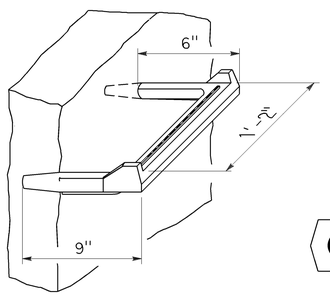

STEP INSERT

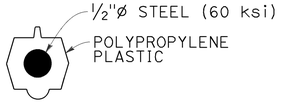

TYPICAL SECTION
(STEP INSERT)

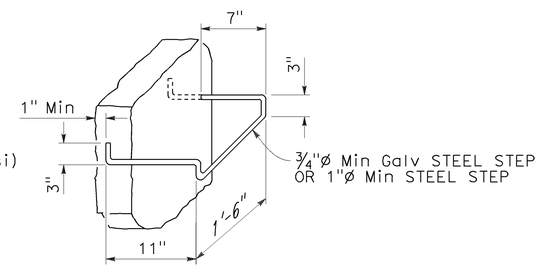

BAR STEP

STEP DETAILS

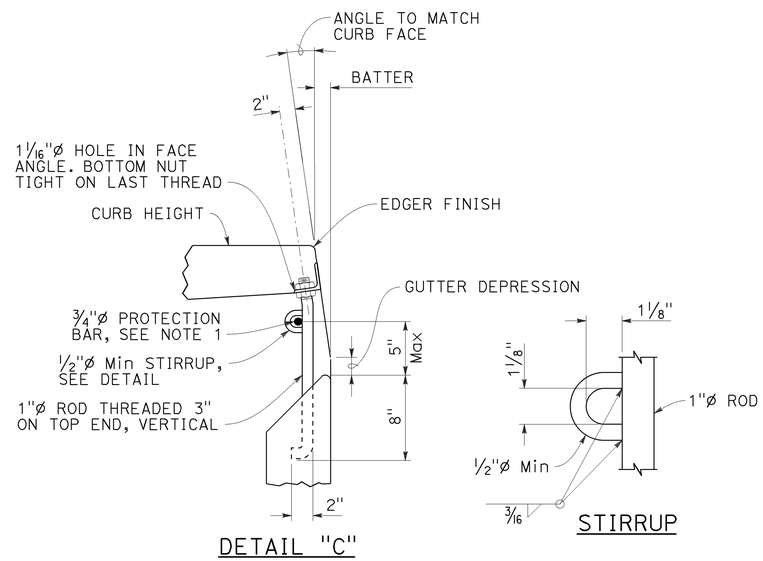

DETAIL "C"

STIRRUP

CURB SUPPORT

CURB SUPPORTS SHALL BE EVENLY SPACED AND MINIMAL IN NUMBER SUCH THAT MAXIMUM SPAN OF UNSUPPORTED CURB IS 7'-0".

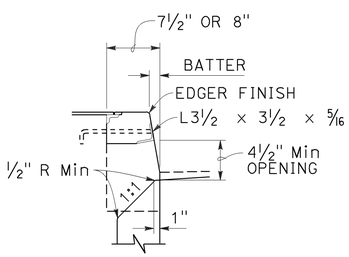

TYPE A CURBS

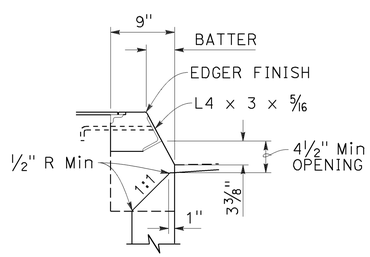

TYPE B CURBS

CURB OPENING DETAILS

STATE OF CALIFORNIA
DEPARTMENT OF TRANSPORTATION

DRAINAGE INLET DETAILS

NO SCALE

RSP D74 DATED JULY 15, 2016 SUPPLEMENTS THE STANDARD PLANS BOOK DATED 2010.

REVISED STANDARD PLAN RSP D74

6-20-16

Dist	COUNTY	ROUTE	POST MILES TOTAL PROJECT	SHEET No.	TOTAL SHEETS
04	Son	1	30.5	59	97

REGISTERED CIVIL ENGINEER

April 19, 2013
PLANS APPROVAL DATE

Raymond Don Tsztoo No. C37332 Exp. 6-30-14 CIVIL STATE OF CALIFORNIA REGISTERED PROFESSIONAL ENGINEER

THE STATE OF CALIFORNIA OR ITS OFFICERS OR AGENTS SHALL NOT BE RESPONSIBLE FOR THE ACCURACY OR COMPLETENESS OF SCANNED COPIES OF THIS PLAN SHEET.

TO ACCOMPANY PLANS DATED 6-27-16

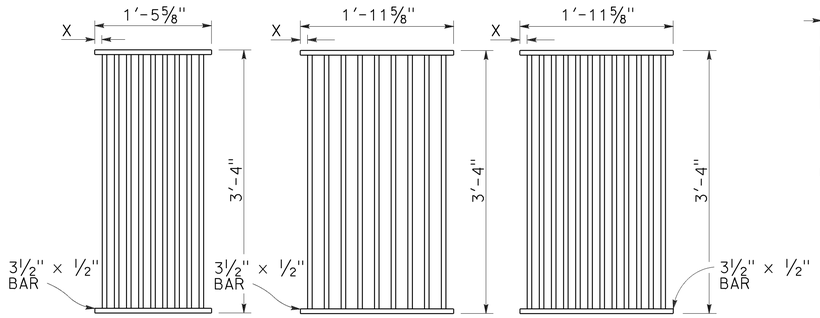

TYPE 18-9

1⅜" Clear spacing. Use within the roadbed on highways where bicycles and pedestrians are excluded.

TYPE 24-9

2" Clear spacing. Use in locations off the roadbed on all types of highways.

TYPE 24-12

1⅜" Clear spacing. Use within the roadbed on highways where bicycles and pedestrians are excluded.

RECTANGULAR GRATE DETAILS

(See table below)

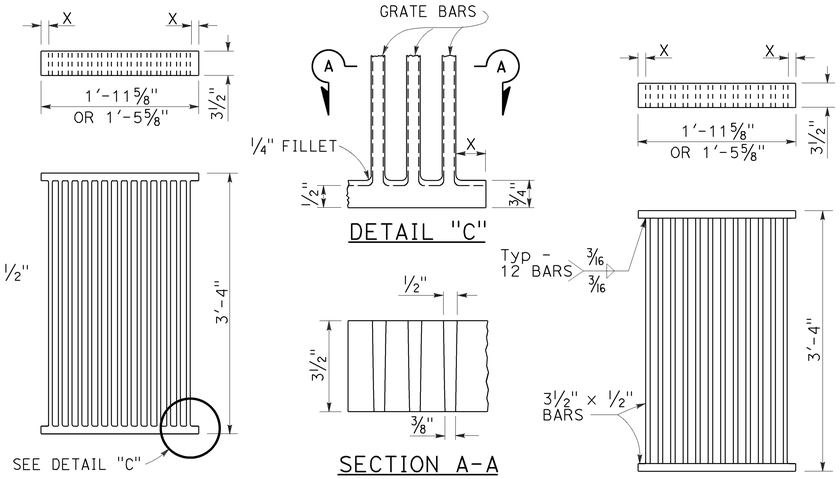

ALTERNATIVE CAST DUCTILE IRON GRATE OR CAST CARBON STEEL GRATE

ALTERNATIVE WELDED GRATE

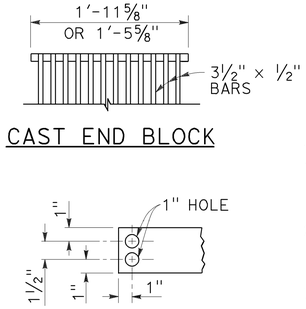

CAST END BLOCK

END OF BAR

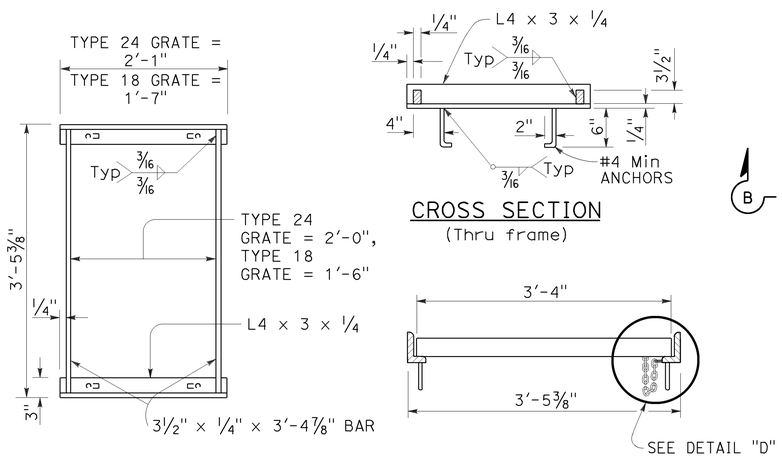

TYPICAL FRAME

CROSS SECTION
(Thru frame)

LONGITUDINAL SECTION
(Thru frame and grate)

RECTANGULAR FRAME DETAILS

(For all rectangular grates)

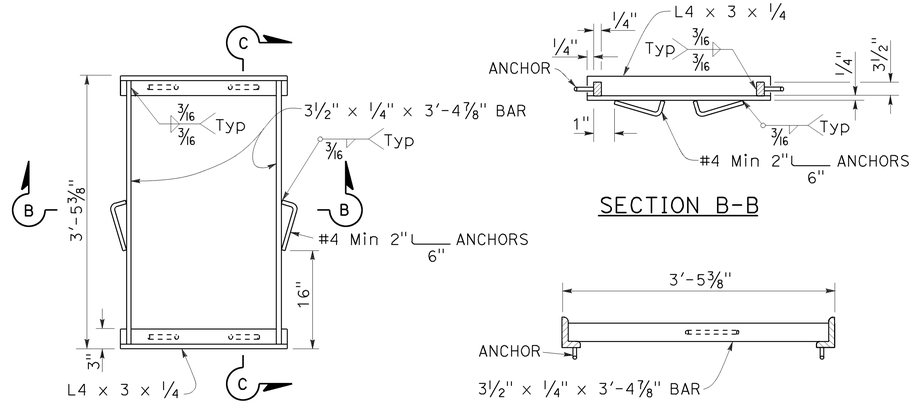

TYPICAL FRAME

SECTION B-B

SECTION C-C

ALTERNATIVE ANCHOR FOR RECTANGULAR FRAME

(For details not shown, See Rectangular Frame Details)

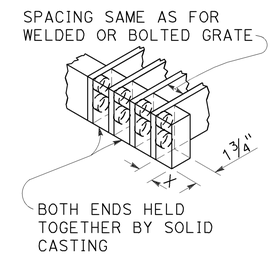

ALTERNATIVE CAST DUCTILE IRON OR CAST CARBON STEEL END BLOCK GRATE

NOTES:

1. Grate type numbers refer to approximate width of grate in inches and number of bars, respectively.
2. Contractor has the option of using cast ductile iron, cast carbon steel, welded, bolted, or cast end block grate.
3. Rounded top of bars optional on all grates.
4. Pipe inlets with a grate shall be placed so that bars parallel direction of principle surface flow.
5. Complete joint penetration butt welds may be substituted for the fillet welds on all anchors.
6. Standard square, hexagon, round or equivalent headed anchors may be substituted for the right angle hooks on the anchors shown on this plan.
7. Grate and frame weights are based on welded grates (weights of face angles, steps, protection bars, etc. are not included).
8. Connect chain to grate and frame only at locations shown on the plans. When chain is required, do not use cast ductile iron grates.

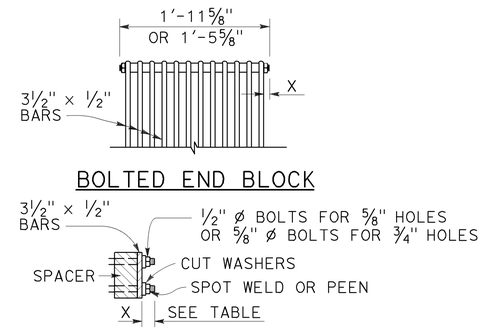

ALTERNATIVE BOLTED GRATE

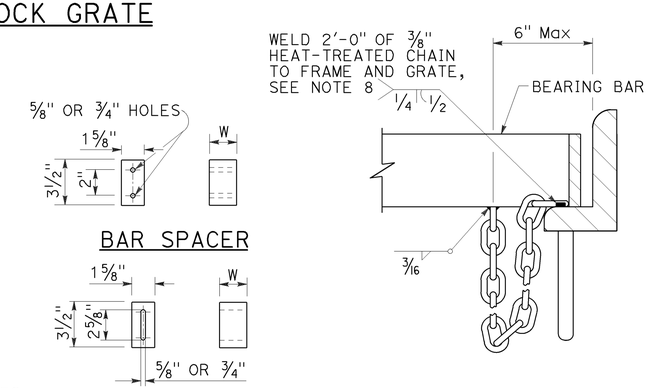

GRATE BAR SPACING TABLE

TYPE	No. OF BARS	CLEAR BAR SPACING	X
18-9	9	1⅜"	1 1/16"
24-9	9	2"	1 9/16"
24-12	12	1⅜"	1¼"

INLET TYPE	COVER TYPE	WEIGHT LB
OS	PLATE	174
OL-7	PLATE	170
OL-10	PLATE	170
OL-14	PLATE	170
OL-21	PLATE	170
OCP	PLATE	112
OCPI	PLATE	112
OCPI	REDWOOD	42
OMP	PLATE	177
OMPI	PLATE	177

INLET TYPE	GRATE TYPE	No. OF GRATES	WEIGHT LB
GDO	24-12	2	634
GOL-7	24-12	1	326
GOL-10	24-12	1	326
GO,G1,G2,G3,G4 (TYPE 24)	24-9	1	263
	24-12	1	326
G4 (TYPE 18),G5,G6	18-9	1	249
GT1	18-9	2	498
GT2	18-9	2	498
GT3	24-12	2	652
GT4	24-12	2	652
TRASH RACK			22
GRATE CHAIN			3

BASIS FOR Misc IRON & STEEL FINAL PAY WEIGHTS FOR DRAINAGE INLETS

(See Note 7)

STATE OF CALIFORNIA
DEPARTMENT OF TRANSPORTATION

GRATE DETAILS No. 1

NO SCALE

RSP D77A DATED APRIL 19, 2013 SUPERSEDES RSP D77A DATED JULY 20, 2012 AND STANDARD PLAN D77A DATED MAY 20, 2011 - PAGE 164 OF THE STANDARD PLANS BOOK DATED 2010.

REVISED STANDARD PLAN RSP D77A

2010 REVISED STANDARD PLAN RSP D77A

4-4-13

Dist	COUNTY	ROUTE	POST MILES TOTAL PROJECT	SHEET No.	TOTAL SHEETS
04	Son	1	30.5	60	97

REGISTERED CIVIL ENGINEER

April 19, 2013
PLANS APPROVAL DATE

Raymond Don Tsztoo
No. C37332
Exp. 6-30-14
CIVIL
STATE OF CALIFORNIA
REGISTERED PROFESSIONAL ENGINEER

THE STATE OF CALIFORNIA OR ITS OFFICERS OR AGENTS SHALL NOT BE RESPONSIBLE FOR THE ACCURACY OR COMPLETENESS OF SCANNED COPIES OF THIS PLAN SHEET.

TO ACCOMPANY PLANS DATED 6-27-16

2010 REVISED STANDARD PLAN RSP D77B

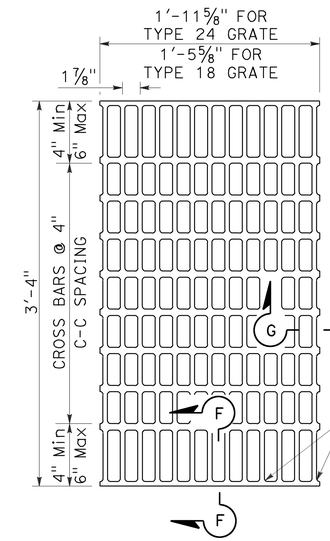

NOTES:

Bearing bars to be 3½" × ¼" bars on 1⅞" centers.

⅜"± ø Cross bars may be fillet welded, resistance welded or electroforged to bearing bars.

Weight of Type 24 grate = 141 LBS.

Weight of Type 18 grate = 107 LBS. (Type 24 grate shown).

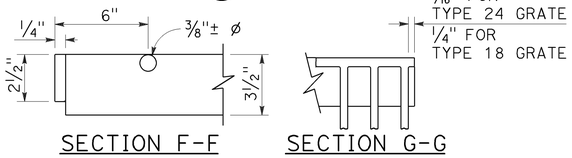

SECTION F-F SECTION G-G

TYPE 18-10 AND 24-13 GRATE

(Welded Steel)

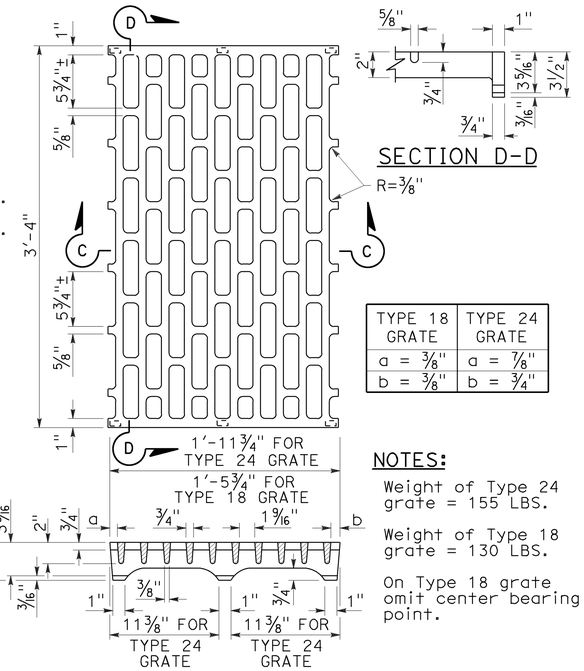

TYPE 18 GRATE	TYPE 24 GRATE
a = ⅜"	a = ⅞"
b = ⅜"	b = ¾"

NOTES:

Weight of Type 24 grate = 155 LBS.

Weight of Type 18 grate = 130 LBS.

On Type 18 grate omit center bearing point.

SECTION C-C

TYPE 18-8C AND 24-10C GRATE

(Cast ductile iron)

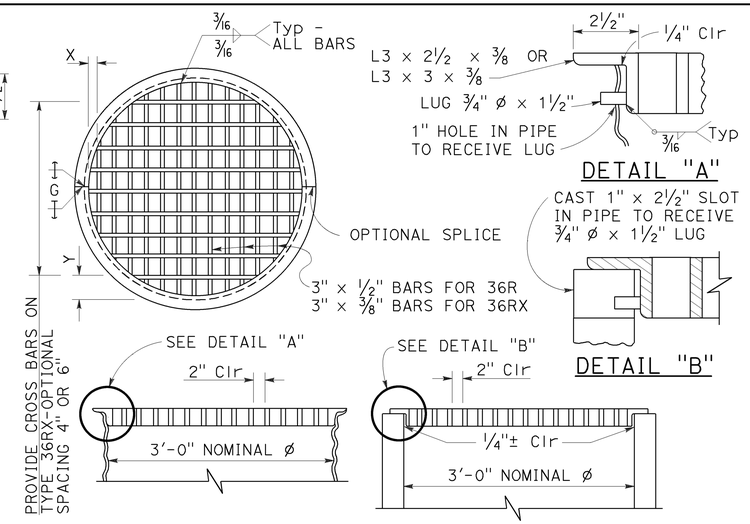

DETAIL "A" DETAIL "B"

TYPE 36R AND 36RX GRATE DETAILS

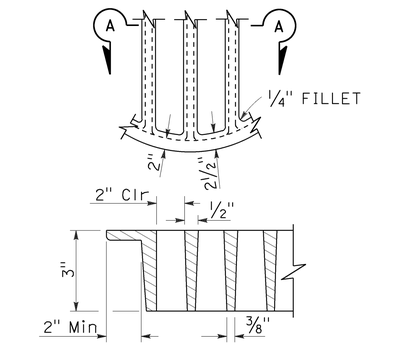

SECTION A-A

ALTERNATIVE CAST DUCTILE IRON GRATE OR CAST CARBON STEEL GRATE TYPE 36R AND 36RX

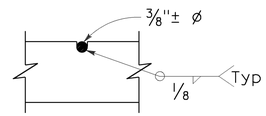

⅜"± ø Cross bars may be fillet welded, resistance welded or electroforged to bearing bars.

CROSS BAR DETAIL TYPE 36RX GRATE (WELDED STEEL)

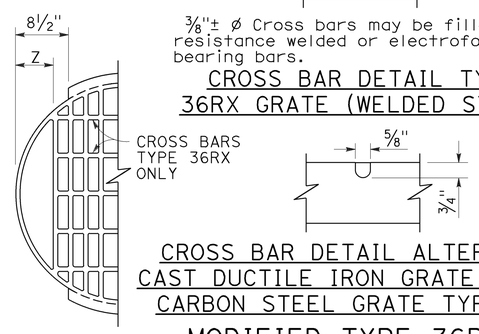

CROSS BAR DETAIL ALTERNATIVE CAST DUCTILE IRON GRATE OR CAST CARBON STEEL GRATE TYPE 36RX

MODIFIED TYPE 36R AND 36RX GRATE FOR ODI INLET

BASIS FOR Misc IRON AND STEEL FINAL PAY WEIGHTS FOR DRAINAGE INLETS

INLET TYPE	GRATE TYPE	No. OF GRATES	WEIGHT LB
GDO (SEE NOTE 4)	24-10C	2	391
	24-10S	2	456
	24-12X	2	473
	24-13	2	374
GO,GOL,G1,G2, G3,G4 (TYPE 24)	24-10C	1	202
	24-10S	1	229
	24-12X	1	239
	24-13	1	188
G4 (TYPE 18) G5,G6	18-8S	1	187
	18-9X	1	187
	18-10	1	149
GT1,GT2	18-8S	2	374
	18-9X	2	374
	18-10	2	298
GT3,GT4	24-10C	2	404
	24-10S	2	458
	24-12X	2	478
	24-13	2	376
ODI	36RX (Mod)	1	196
GMP,GCP,GCPI	36RX	1	215
ODI	36R (Mod)	1	220
GMP,GCP,GCPI	36R	1	236
TRASH RACK			22
GRATE CHAIN			3

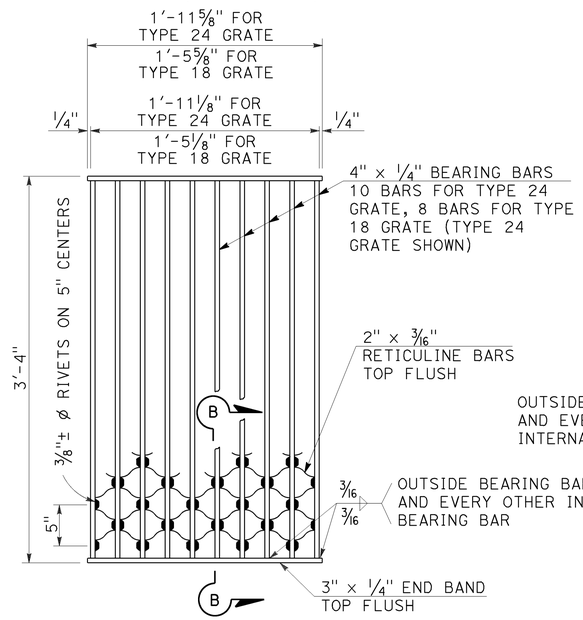

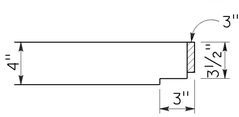

NOTES:

Weight of Type 24 grate = 182 LBS.
Weight of Type 18 grate = 145 LBS.

SECTION B-B

TYPE 18-8S AND 24-10S GRATE

(Welded Steel) Reticuline type

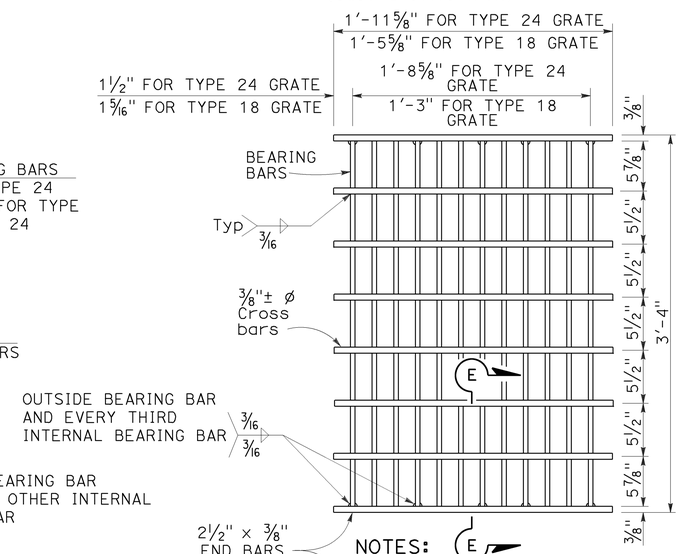

SECTION E-E

NOTES:

Bearing bars to be 3½" × ⅜" bars on 1⅞" centers.

12 Bars for Type 24 grate - 9 bars for Type 18 grates. (Type 24 grate shown).

Weight of Type 24 grate = 192 LBS.

Weight of Type 18 grate = 145 LBS.

⅜"± ø Cross bars may be fillet welded, resistance welded or electroforged to bearing bars.

TYPE 18-9X AND 24-12X GRATE

(Welded Steel)

NOTES:

1. When alternative grates are allowed - Final pay based on alternative with the lesser weight.
2. Use frame shown on Standard Plan D74A, D74B or RSP D77A as appropriate.
3. When Type 24-10S, 24-12X or 24-13 grates are used with GDO Inlets, a ¼" × 3½" × 3'-4⅞" steel bar shall be welded across the center of inlet frame to separate the individual grates.
4. See Revised Standard Plan RSP D77A for connecting chain to welded grate and frame. When chain is required, do not use cast ductile iron grate.

GRATE BAR SPACING TABLE

TYPE	No. OF BARS	CLEAR BAR SPACING	X	Y 4" SPACING	Y 6" SPACING	Z
36R	13	2"	2⅛"	-	-	-
36RX (STEEL)	15	2"	9/16"	3¾"	5¾"	-
36RX (CAST)	13	2"	2⅛"	3¾"	5¾"	-
36R Mod	12	2"	2⅛"	-	-	5"
36RX Mod (STEEL)	13	2"	9/16"	3¾"	5¾"	5 11/16"
36RX Mod (CAST)	12	2"	2⅛"	3¾"	5¾"	5"

STATE OF CALIFORNIA
DEPARTMENT OF TRANSPORTATION

GRATE DETAILS No. 2

NO SCALE

RSP D77B DATED APRIL 19, 2013 SUPERSEDES RSP D77B DATED JULY 20, 2012 AND STANDARD PLAN D77B DATED MAY 20, 2011 - PAGE 165 OF THE STANDARD PLANS BOOK DATED 2010.

REVISED STANDARD PLAN RSP D77B

4-4-13

Dist	COUNTY	ROUTE	POST MILES TOTAL PROJECT	SHEET No.	TOTAL SHEETS
04	Son	1	30.5	61	97

REGISTERED CIVIL ENGINEER

July 19, 2013
PLANS APPROVAL DATE

REGISTERED PROFESSIONAL ENGINEER
Gurinderpal Bhullar
No. C48815
Exp. 9-30-14
CIVIL
STATE OF CALIFORNIA

THE STATE OF CALIFORNIA OR ITS OFFICERS OR AGENTS SHALL NOT BE RESPONSIBLE FOR THE ACCURACY OR COMPLETENESS OF SCANNED COPIES OF THIS PLAN SHEET.

TO ACCOMPANY PLANS DATED 6-27-16

TABLE 1

TAPER LENGTH CRITERIA AND CHANNELIZING DEVICE SPACING

SPEED (S)	MINIMUM TAPER LENGTH * FOR WIDTH OF OFFSET 12 FEET (W)				MAXIMUM CHANNELIZING DEVICE SPACING		
					X	Y	Z **
	TANGENT 2L	MERGING L	SHIFTING L/2	SHOULDER L/3	TAPER	TANGENT	CONFLICT
mph	ft	ft	ft	ft	ft	ft	ft
20	160	80	40	27	20	40	10
25	250	125	63	42	25	50	12
30	360	180	90	60	30	60	15
35	490	245	123	82	35	70	17
40	640	320	160	107	40	80	20
45	1080	540	270	180	45	90	22
50	1200	600	300	200	50	100	25
55	1320	660	330	220	55	110	27
60	1440	720	360	240	60	120	30
65	1560	780	390	260	65	130	32
70	1680	840	420	280	70	140	35

* - For other offsets, use the following merging taper length formula for L:
For speed of 40 mph or less, $L = WS^2/60$
For speed of 45 mph or more, $L = WS$

Where: L = Taper length in feet
W = Width of offset in feet
S = Posted speed limit, off-peak 85th-percentile speed prior to work starting, or the anticipated operating speed in mph

** - Use for taper and tangent sections where there are no pavement markings or where there is a conflict between existing pavement markings and channelizers (CA).

TABLE 2

LONGITUDINAL BUFFER SPACE AND FLAGGER STATION SPACING

SPEED *	Min D **	DOWNGRADE Min D ***		
		-3%	-6%	-9%
mph	ft	ft	ft	ft
20	115	116	120	126
25	155	158	165	173
30	200	205	215	227
35	250	257	271	287
40	305	315	333	354
45	360	378	400	427
50	425	446	474	507
55	495	520	553	593
60	570	598	638	686
65	645	682	728	785
70	730	771	825	891

* - Speed is posted speed limit, off-peak 85th-percentile speed prior to work starting, or the anticipated operating speed in mph

** - Longitudinal buffer space or flagger station spacing

*** - Use on sustained downgrade steeper than -3 percent and longer than 1 mile.

TABLE 3

ADVANCE WARNING SIGN SPACING

ROAD TYPE	DISTANCE BETWEEN SIGNS *		
	A	B	C
	ft	ft	ft
URBAN - 25 mph OR LESS	100	100	100
URBAN - MORE THAN 25 mph TO 40 mph	250	250	250
URBAN - MORE THAN 40 mph	350	350	350
RURAL	500	500	500
EXPRESSWAY / FREEWAY	1000	1500	2640

* - The distances are approximate, are intended for guidance purposes only, and should be applied with engineering judgment. These distances should be adjusted by the Engineer for field conditions, if necessary, by increasing or decreasing the recommmended distances.

STATE OF CALIFORNIA
DEPARTMENT OF TRANSPORTATION

TRAFFIC CONTROL SYSTEM TABLES FOR LANE AND RAMP CLOSURES

NO SCALE

RSP T9 DATED JULY 19, 2013 SUPERSEDES RSP T9 DATED APRIL 19, 2013 THAT SUPPLEMENTS THE STANDARD PLANS BOOK DATED 2010.

REVISED STANDARD PLAN RSP T9

2010 REVISED STANDARD PLAN RSP T9

4-30-13

Dist	COUNTY	ROUTE	POST MILES TOTAL PROJECT	SHEET No.	TOTAL SHEETS
04	Son	1	30.5	62	97

Devinder Singh
REGISTERED CIVIL ENGINEER

October 30, 2015
PLANS APPROVAL DATE

REGISTERED PROFESSIONAL ENGINEER
Devinder Singh
No. C50470
Exp. 6-30-17
CIVIL
STATE OF CALIFORNIA

THE STATE OF CALIFORNIA OR ITS OFFICERS OR AGENTS SHALL NOT BE RESPONSIBLE FOR THE ACCURACY OR COMPLETENESS OF SCANNED COPIES OF THIS PLAN SHEET.

TO ACCOMPANY PLANS DATED 6-27-16

2010 REVISED STANDARD PLAN RSP T13

NOTES:

See Revised Standard Plan RSP T9 for tables.

Use cone spacing X for taper segment, Y for tangent segment or Z for conflict situations, as approriate, per Table 1, unless X, Y, or Z cone spacing is shown on this sheet.

Unless otherwise specified in the special provisions, all temporary warning signs shall have black legend on fluorescent orange background.

California codes are designated by (CA). Otherwise, Federal (MUTCD) codes are shown.

TYPICAL LANE CLOSURE WITH REVERSIBLE CONTROL

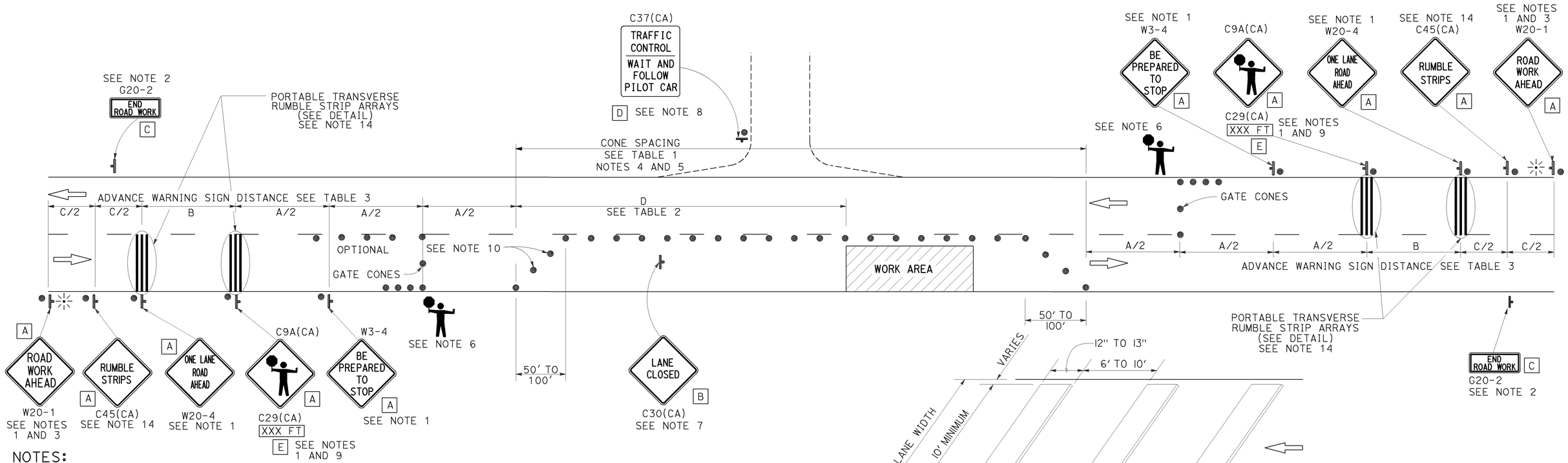

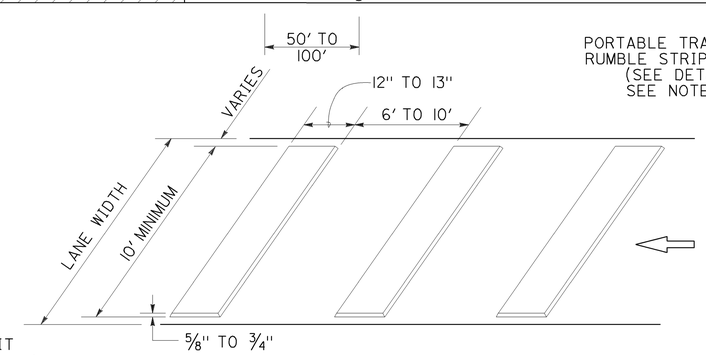

PORTABLE TRANSVERSE RUMBLE STRIP ARRAY DETAIL

NOTES:

1. Each advance warning sign in each direction of travel shall be equipped with at least two flags for daytime closure. Each flag shall be at least 16" x 16" in size and shall be orange or fluorescent red-orange in color. Flashing beacons shall be placed at the locations indicated for lane closure during hours of darkness.
2. A G20-2 "END ROAD WORK" sign, as appropriate, shall be placed at the end of the lane control unless the end of work area is obvious, or ends within a larger project's limits.
3. If the W20-1 sign would follow within 2000' of a stationary W20-1 or G20-1 "ROAD WORK NEXT _____ MILES", use a W20-4 sign for the first advance warning sign.
4. All cones used for lane closures during the hours of darkness shall be fitted with retroreflective bands (or sleeves) as specified in the specifications.
5. Portable delineators, placed at one-half the spacing indicated for traffic cones, may be used instead of cones for daytime closures only.
6. Additional advance flaggers may be required. Flagger should stand in a conspicuous place, be visible to approaching traffic as well as approaching vehicles after the first vehicle has stopped. During the hours of darkness, the flagging-station and flagger shall be illuminated and clearly visible to approaching traffic. The illumination footprint of the lighting on the ground shall be at least 20' in diameter. Place a minimum of four cones at 50' intervals in advance of flagger station as shown.
7. Place C30(CA) "LANE CLOSED" sign at 500' to 1000' intervals throughout extended work areas. They are optional if the work area is visible from the flagger station.
8. When a pilot car is used, place a C37(CA) "TRAFFIC CONTROL-WAIT AND FOLLOW PILOT CAR" sign with black legend on white background at all intersections, driveways and alleys without a flagger within traffic control area. Signs shall be clean and visible at all times. Where traffic can not be effectively self-regulated, at least one flagger shall be used at each intersection within traffic control area.
9. An optional C29(CA) sign may be placed below the C9A(CA) sign.
10. Either traffic cones or barricades shall be placed on the taper. Barricades shall be Type I, II, or III.
11. The color of the portable transverse rumble strips shall be black or orange. Use 2 arrays, each array shall consist of 3 rumble strips.
12. Portable transverse rumble strips shall not be placed on sharp horizontal or vertical curves nor shall they be placed through pedestrian crossings.
13. If the portable transverse rumble strips become out of alignment (skewed) by more than 6 inches, measured from one end to the other, they shall be readjusted to bring the placement back to the original location.
14. Portable transverse rumble strips are not required if any one of the following conditions is satisfied:
    A. Work duration occupies a location for four hours or less
    B. Posted speed limit is below 45 MPH
    C. Work is of emergency nature
    D. Work zone is in snow or icy weather conditions

LEGEND

- TRAFFIC CONE
- TEMPORARY TRAFFIC CONTROL SIGN
- PORTABLE FLASHING BEACON
- FLAGGER

SIGN PANEL SIZE (Min)

A	48" x 48"
B	30" x 30"
C	36" x 18"
D	36" x 42"
E	20" x 7"

STATE OF CALIFORNIA
DEPARTMENT OF TRANSPORTATION

TRAFFIC CONTROL SYSTEM FOR LANE CLOSURE ON TWO LANE CONVENTIONAL HIGHWAYS

NO SCALE

RSP T13 DATED OCTOBER 30, 2015 SUPERSEDES RSP T13 DATED OCTOBER 17, 2014, RSP T13 DATED JULY 18, 2014 AND RSP T13 DATED APRIL 19, 2013 AND STANDARD PLAN T13 DATED MAY 20, 2011 - PAGE 241 OF THE STANDARD PLANS BOOK DATED 2010.

REVISED STANDARD PLAN RSP T13

10-13-15

Dist	COUNTY	ROUTE	POST MILES TOTAL PROJECT	SHEET No.	TOTAL SHEETS
04	Son	1	30.5	63	97

Theresa Gabriel
REGISTERED ELECTRICAL ENGINEER

October 30, 2015
PLANS APPROVAL DATE

REGISTERED PROFESSIONAL ENGINEER
Theresa Aziz Gabriel
No. E15129
Exp. 6-30-16
ELECTRICAL
STATE OF CALIFORNIA

THE STATE OF CALIFORNIA OR ITS OFFICERS OR AGENTS SHALL NOT BE RESPONSIBLE FOR THE ACCURACY OR COMPLETENESS OF SCANNED COPIES OF THIS PLAN SHEET.

TO ACCOMPANY PLANS DATED 6-27-16

LEGEND:

- AB — ABANDON. IF APPLIED TO CONDUIT, REMOVE CONDUCTORS
- BC — INSTALL PULL BOX IN EXISTING CONDUIT RUN
- BP — PEDESTRIAN BARRICADE, TYPE AS INDICATED ON PLAN
- CB — INSTALL CONDUIT INTO EXISTING PULL BOX
- CC — CONNECT NEW AND EXISTING CONDUIT. REMOVE EXISTING CONDUCTORS AND INSTALL CONDUCTORS AS INDICATED
- CF — CONDUIT TO REMAIN FOR FUTURE USE. REMOVE CONDUCTORS. INSTALL PULL TAPE
- DH — DETECTOR HANDHOLE
- FA — FOUNDATION TO BE ABANDONED
- IS — INSTALL SIGN ON SIGNAL MAST ARM
- NS — NO SLIP BASE ON STANDARD
- PEC — PHOTOELECTRIC CONTROL
- PEU — PHOTOELECTRIC UNIT
- RC — EQUIPMENT OR MATERIAL TO BE REMOVED AND BECOME THE PROPERTY OF THE CONTRACTOR
- RE — REMOVE ELECTROLIER, FUSES AND BALLAST. TAPE ENDS OF CONDUCTORS
- RL — RELOCATE EQUIPMENT
- RR — REMOVE AND REUSE EQUIPMENT
- RS — REMOVE AND SALVAGE EQUIPMENT
- SC — SPLICE NEW TO EXISTING CONDUCTORS
- SD — SERVICE DISCONNECT
- TSP — TELEPHONE SERVICE POINT

ABBREVIATIONS

AC+	UNDERGROUNDED CONDUCTOR
APS	ACCESSIBLE PEDESTRIAN SIGNAL
Batt	BATTERY
BBS	BATTERY BACKUP SYSTEM
BC	BOLT CIRCLE
Blk	BLACK
BP	BYPASS
BPB	BICYCLE PUSH BUTTON
C	CONDUIT
CB	CIRCUIT BREAKER
CCTV	CLOSED CIRCUIT TELEVISION
Ckt	CIRCUIT
CMS	CHANGEABLE MESSAGE SIGN
Ctid	CALTRANS IDENTIFICATION
Comm	COMMUNICATION
Cntl	CONTROL
DF	DEPARTMENT-FURNISHED
DLC	LOOP DETECTOR LEAD-IN CABLE
EMS	EXTINGUISHABLE MESSAGE SIGN
EVUC	EMERGENCY VEHICLE UNIT CABLE
EVUD	EMERGENCY VEHICLE UNIT DETECTOR
FB	FLASHING BEACON
FBCA	FLASHING BEACON CONTROL ASSEMBLY
FBS	FLASHING BEACON WITH SLIP BASE
FO	FIBER OPTIC
G	EQUIPMENT GROUNDING CONDUCTOR
GB	GROUND BUS
GFCI	GROUND FAULT CIRCUIT INTERRUPTER
Grn	GREEN
HAR	HIGHWAY ADVISORY RADIO
Hex	HEXAGONAL
HPS	HIGH PRESSURE SODIUM
IISNS	INTERNALLY ILLUMINATED STREET NAME SIGN
ISL	INDUCTION SIGN LIGHTING
LED	LIGHT EMITTING DIODE
LMA	LUMINAIRE MAST ARM
LPS	LOW PRESSURE SODIUM
Ltg	LIGHTING
Lum	LUMINAIRE
M	METERED
MAT	MAST ARM MOUNTING TOP ATTACHMENT
MAS	MAST ARM MOUNTING SIDE ATTACHMENT
MBPS	MANUAL BYPASS SWITCH
M/M	MULTIPLE TO MULTIPLE TRANSFORMER
Mtg	MOUNTING
MV	MERCURY VAPOR LIGHTING FIXTURE
MVDS	MICROWAVE VEHICLE DETECTION SYSTEM
N	NEUTRAL (GROUNDED CONDUCTOR)
NB	NEUTRAL BUS
NC	NORMALLY CLOSE
NO	NORMALLY OPEN
P	CIRCUIT BREAKER'S POLE
PB	PULL BOX
PBA	PUSH BUTTON ASSEMBLY
PEC	PHOTOELECTRIC CONTROL
Ped	PEDESTRIAN
PEU	PHOTOELECTRIC UNIT
PT	CONDUIT WITH PULL TAPE
PTR	POWER TRANSFER RELAY
RE	RELOCATED EQUIPMENT
RM	RAMP METERING
RWIS	ROADSIDE WEATHER INFORMATION SYSTEM
SB	SLIP BASE
SIC	SIGNAL INTERCONNECT CABLE
Sig	SIGNAL
SMA	SIGNAL MAST ARM
SNS	STREET NAME SIGN
SP	SERVICE POINT
TB	TERMINAL BOARD
TDC	TELEPHONE DEMARCATION CABINET
Temp	TEMPERATURE
TMS	TRAFFIC MONITORING STATION
TOS	TRAFFIC OPERATIONS SYSTEM
UPS	UNINTERRUPTABLE POWER SUPPLY
UPSC	UNINTERRUPTABLE POWER SUPPLY CONTROLLER
Veh	VEHICLE
VIVDS	VIDEO IMAGE VEHICLE DETECTION SYSTEM
Wht	WHITE
WIM	WEIGH-IN-MOTION
Xfmr	TRANSFORMER

SOFFIT AND WALL-MOUNTED LUMINAIRES

- PENDANT SOFFIT LUMINAIRE, 70 W HPS UNLESS OTHERWISE SPECIFIED
- FLUSH-MOUNTED SOFFIT LUMINAIRE, 70 W HPS UNLESS OTHERWISE SPECIFIED
- WALL-MOUNTED LUMINAIRE, 70 W HPS UNLESS OTHERWISE SPECIFIED
- EXISTING SOFFIT OR WALL-MOUNTED LUMINAIRE TO REMAIN UNMODIFIED
- (M) EXISTING SOFFIT OR WALL-MOUNTED LUMINAIRE TO BE MODIFIED AS SPECIFIED

NOTE:
Arrow indicates "street side" of luminaire.

COMMONLY USED SYMBOLS FOR UNITED STATES CUSTOMARY UNITS OF MEASUREMENT:

SYMBOL	DEFINITIONS
Ω	OHMS
min	MINUTE
s	SECOND
bps	BITS PER SECOND
Bps	BYTES PER SECOND
A	AMPERE
V	VOLT
V(dc)	VOLT (DIRECT CURRENT)
V(ac)	VOLT (ALTERNATING CURRENT)
FC	FOOT - CANDLE
W	WATTS
VA	VOLT-AMPERE
M	MEGA
k	KILO
m	MILLI
μ	MICRO
P	PICO
Hz	HERTZ

MISCELLANEOUS ELECTROLIERS

NEW	EXISTING	
		LUMINAIRE ON WOOD POLE
		NON-STANDARD ELECTROLIER (SEE PROJECT LEGEND)
		CITY ELECTROLIER
		ELECTROLIER FOUNDATION (FUTURE INSTALLATION)

NOTES:

1. LED luminaires shall be 235 W when installed on Type 21, 21D, 30, 31 and 32 Standards, unless otherwise specified. LED luminaires shall be 165 W when installed on other type standards or poles, unless otherwise specified.
2. Luminaires shall be the cutoff type, ANSI Type III medium cutoff lighting distribution, unless otherwise specified.

STANDARD ELECTROLIER

NEW	EXISTING	STANDARD TYPE
		15
		15D
		15 STRUCTURE
		15D STRUCTURE
		21
		21D
		21 STRUCTURE
		21D STRUCTURE
		30
		31
		32

STATE OF CALIFORNIA
DEPARTMENT OF TRANSPORTATION

ELECTRICAL SYSTEMS (LEGEND AND ABBREVIATIONS)

NO SCALE

RSP ES-1A DATED OCTOBER 30, 2015 SUPERSEDES RSP ES-1A DATED JULY 19, 2013 AND STANDARD PLAN ES-1A DATED MAY 20, 2011 - PAGE 425 OF THE STANDARD PLANS BOOK DATED 2010.

REVISED STANDARD PLAN RSP ES-1A

2010 REVISED STANDARD PLAN RSP ES-1A

9-29-15

Dist	COUNTY	ROUTE	POST MILES TOTAL PROJECT	SHEET No.	TOTAL SHEETS
04	Son	1	30.5	64	97

Theresa Gabriel
REGISTERED ELECTRICAL ENGINEER

October 30, 2015
PLANS APPROVAL DATE

REGISTERED PROFESSIONAL ENGINEER Theresa Aziz Gabriel No. E15129 Exp. 6-30-16 ELECTRICAL STATE OF CALIFORNIA

THE STATE OF CALIFORNIA OR ITS OFFICERS OR AGENTS SHALL NOT BE RESPONSIBLE FOR THE ACCURACY OR COMPLETENESS OF SCANNED COPIES OF THIS PLAN SHEET.

TO ACCOMPANY PLANS DATED 6-27-16

CONDUIT

NEW	EXISTING	
		LIGHTING CONDUIT, UNLESS OTHERWISE INDICATED OR NOTED
		TRAFFIC SIGNAL CONDUIT
C	c	COMMUNICATION CONDUIT
T	t	TELEPHONE CONDUIT
F	f	FIRE ALARM CONDUIT
FO	fo	FIBER OPTIC CONDUIT
		CONDUIT TERMINATION
R	r	CONDUIT RISER ATTACHED TO THE STRUCTURE OR SERVICE POLE

SERVICE EQUIPMENT

NEW	EXISTING	
OH	oh	OVERHEAD LINES
U	U	WOOD POLE, "U" INDICATES UTILITY OWNED
		POLE GUY WITH ANCHOR
		UTILITY TRANSFORMER - GROUND MOUNTED
III	III	SERVICE EQUIPMENT ENCLOSURE TYPE. DOOR INDICATES FRONT OF ENCLOSURE
T	t	TELEPHONE DEMARCATION CABINET

POLE-MOUNTED SERVICE DESIGNATION

TYPE H SERVICE, 28'-10" — TYPE OF INSTALLATION AND POLE HEIGHT ABOVE GRADE

FLASHING BEACON

NEW	EXISTING	
R	R	FLASHING BEACON (ONE VEHICLE SIGNAL HEAD WITH BACKPLATE AND VISOR) "R" INDICATES RED INDICATION, "Y" INDICATES YELLOW INDICATION
Y Y	Y Y	FLASHING BEACON WITH TYPE 15-FBS STANDARD AND A SIGN.
R R	R R	FLASHING BEACON WITH TYPES 9, 9A OR 9B SIGN UNLESS OTHERWISE SPECIFIED OR INDICATED

SIGNAL EQUIPMENT

NEW	EXISTING	
		PEDESTRIAN SIGNAL HEAD
		PUSH BUTTON ASSEMBLY POST
		PEDESTRIAN BARRICADE
		VEHICLE SIGNAL HEAD (WITH BACKPLATE AND 3-SECTIONS: RED, YELLOW AND GREEN)
		VEHICLE SIGNAL HEAD WITH ANGLE VISOR
PV	PV	MODIFICATIONS OF BASIC SYMBOL: "L" INDICATES ALL NON-ARROW SECTIONS LOUVERED "LG" INDICATES LOUVERED GREEN SECTION ONLY "PV" INDICATES ALL 12" SECTIONS PROGRAMMED VISIBILITY "8" INDICATES ALL 8" SECTIONS (ONLY WHEN SPECIFIED)
		VEHICLE SIGNAL HEAD CONSISTING OF RED, YELLOW AND GREEN LEFT ARROW SECTIONS
		VEHICLE SIGNAL HEAD CONSISTING OF RED AND YELLOW SECTIONS WITH AN UP GREEN ARROW SECTION
		VEHICLE SIGNAL HEAD (5 SECTION) CONSISTING OF RED, YELLOW AND GREEN SECTIONS WITH YELLOW AND GREEN RIGHT ARROW SECTIONS
		TYPE 15TS STANDARD WITH VEHICLE SIGNAL HEAD AND LUMINAIRE
		TYPE 21TS STANDARD WITH VEHICLE SIGNAL HEAD AND LUMINAIRE
		STANDARD WITH LUMINAIRE AND SIGNAL MAST ARMS AND ATTACHED VEHICLE SIGNAL HEADS
		TYPE 1 STANDARD WITH ATTACHED VEHICLE SIGNAL HEADS
		STANDARD WITH A SIGNAL MAST ARM, ATTACHED VEHICLE SIGNAL HEADS AND INTERNALLY ILLUMINATED STREET NAME SIGN
		CONTROLLER ASSEMBLY. DOOR INDICATES FRONT OF CABINET

SIGNAL EQUIPMENT Cont

NEW	EXISTING	
		GUARD POST
		TYPE 1 STANDARD WITH RAMP METERING SIGN
		OPTICAL DETECTOR FOR THE EMERGENCY VEHICLE DETECTION

NOTES:

1. All signal sections shall be 12" unless shown otherwise.
2. Signal heads shall be provided with backplates unless shown otherwise.

ILLUMINATED OVERHEAD SIGN

NEW	EXISTING	
		SINGLE POST, SINGLE ILLUMINATED SIGN, BALANCED BUTTERFLY
		SINGLE POST, DOUBLE ILLUMINATED SIGN, BALANCED BUTTERFLY
		SINGLE POST, SINGLE ILLUMINATED SIGN, FULL CANTILEVER
		DOUBLE POST, SINGLE ILLUMINATED SIGN
		SINGLE ILLUMINATED SIGN MOUNTED ON STRUCTURE
		DOUBLE POST, SINGLE ILLUMINATED SIGN WITH ELECTROLIER

STATE OF CALIFORNIA
DEPARTMENT OF TRANSPORTATION

ELECTRICAL SYSTEMS (LEGEND AND ABBREVIATIONS)

NO SCALE

RSP ES-1B DATED OCTOBER 30, 2015 SUPERSEDES RSP ES-1B DATED JULY 19, 2013 AND STANDARD PLAN ES-1B DATED MAY 20, 2011 - PAGE 426 OF THE STANDARD PLANS BOOK DATED 2010.

REVISED STANDARD PLAN RSP ES-1B

2010 REVISED STANDARD PLAN RSP ES-1B

8-19-15

Dist	COUNTY	ROUTE	POST MILES TOTAL PROJECT	SHEET No.	TOTAL SHEETS
04	Son	1	30.5	65	97

Theresa Gabriel
REGISTERED ELECTRICAL ENGINEER

April 15, 2016
PLANS APPROVAL DATE

REGISTERED PROFESSIONAL ENGINEER
Theresa Aziz Gabriel
No. E15129
Exp. 6-30-16
ELECTRICAL
STATE OF CALIFORNIA

THE STATE OF CALIFORNIA OR ITS OFFICERS OR AGENTS SHALL NOT BE RESPONSIBLE FOR THE ACCURACY OR COMPLETENESS OF SCANNED COPIES OF THIS PLAN SHEET.

TO ACCOMPANY PLANS DATED 6-27-16

EQUIPMENT IDENTIFICATION

ILLUMINATED SIGN IDENTIFICATION:

SIGN No. 12345
10 ISL SCI 1.0

- SIGN EQUIPMENT IDENTIFICATION CHARACTERS - PLACE ON POST OR STRUCTURE
- TRANSFORMER RATING (kVA)
- LIGHTING CONTROL TYPE
- NUMBER AND TYPE OF FIXTURES

} DO NOT PLACE ON STANDARD OR STRUCTURE

ELECTROLIER OR EQUIPMENT IDENTIFICATION:

L2745 - 15'-0"

- MAST ARM LENGTH, IF SHOWN. DO NOT PLACE ON STANDARD OR STRUCTURE
- EQUIPMENT IDENTIFICATION CHARACTERS - PLACE ON STANDARD OR STRUCTURE. EXISTING EQUIPMENT IDENTIFICATION CHARACTERS ARE SHOWN IN PARENTHESIS

CONDUIT AND CONDUCTOR IDENTIFICATION:

1½"C, 2#10, 15#14, 2 DLC, 12P#18 (PAIR)

- NUMBER AND SIZE OF CONDUCTORS AND CABLES
- SIZE OF CONDUIT IN INCHES

ø1, ø2, ø2P, etc.	TRAFFIC PHASE IDENTIFICATION FOR SIGNALS, DETECTORS AND PHASE DIAGRAMS
1 2 3	LEGEND NUMBERS
A B C	EQUIPMENT, SIGNAL POLES, INSTALLATION OR ITEMS
1 2 3	CONDUIT RUN NUMBERS

SIGNAL AND LIGHTING STANDARD (TYPICAL DESIGNATION):

19A - 3 - 100

- WIND VELOCITY = 100 mph
- CASE 3 ARM LOADING
- STANDARD TYPE
- STANDARD PLAN SHEET NUMBER
- DETAIL, NUMBER, SECTION, TYPE OR ELEVATION

MISCELLANEOUS EQUIPMENT

NEW	EXISTING	
CMS	cms	CHANGEABLE MESSAGE SIGN
		CLOSED CIRCUIT TELEVISION CAMERA
		HIGHWAY ADVISORY RADIO POLE AND ANTENNA
EMS	ems	LED EXTINGUISHABLE MESSAGE SIGN
M V	m v	DETECTION DEVICE M = MICROWAVE SENSOR V = VIDEO IMAGE SENSOR

WIRING DIAGRAM LEGEND

- EXTERNAL CONDUCTOR
- CONDUCTOR OR BUS
- TIE POINT
- CONTACTOR COIL
- CONTACTOR, NO CONTACT
- TERMINAL BLOCKS
- CONTACTOR, NC CONTACT
- ENCLOSURE BOND
- GROUNDING ELECTRODE
- CIRCUIT BREAKER
- RECEPTACLE

PULL BOXES

NEW	EXISTING	
		PULL BOX, No. 5 UNLESS OTHERWISE INDICATED OR NOTED
3	9A(21)	PULL BOX, ADDITIONAL DESIGNATIONS OR DESCRIPTIONS

3 No. 3½ PULL BOX
5 No. 5 PULL BOX
6 No. 6 PULL BOX
7 No. 7 PULL BOX (CEILING)
8 No. 8 PULL BOX
9 No. 9 PULL BOX (STRUCTURE)
9A No. 9A PULL BOX (STRUCTURE)

(C) COMMUNICATIONS PULL BOX
(E) PULL BOX WITH EXTENSION
(S) SPRINKLER CONTROL PULL BOX
(21) ANCHOR BOLTS AND CONDUIT FOR FUTURE INSTALLATION OF TYPE 21 STANDARD
(T) TRAFFIC PULL BOX

VEHICLE DETECTORS

5 J 9 U

- VEHICLE DETECTOR DESIGNATION
- U = UPPER
  L = LOWER
- SLOT NUMBER IN INPUT FILE
- INPUT FILE (I OR J)
- PHASE

NEW	EXISTING	
		TYPE A LOOP DETECTOR. OUTLINE OF SAW CUT SHOWN
		TYPE B LOOP DETECTOR. OUTLINE OF SAW CUT SHOWN
		TYPE C LOOP DETECTOR. OUTLINE OF SAW CUT SHOWN
		TYPE D LOOP DETECTOR. OUTLINE OF SAW CUT SHOWN
		TYPE E LOOP DETECTOR. OUTLINE OF SAW CUT SHOWN
		TYPE Q LOOP DETECTOR. OUTLINE OF SAW CUT SHOWN
DH	dh	DETECTOR HANDHOLE
		MICROWAVE OR VIDEO DETECTION ZONE

STATE OF CALIFORNIA
DEPARTMENT OF TRANSPORTATION

ELECTRICAL SYSTEMS (LEGEND AND ABBREVIATIONS)

NO SCALE

RSP ES-1C DATED APRIL 15, 2016 SUPERSEDES RSP ES-1C DATED OCTOBER 30, 2015 AND RSP ES-1C DATED JULY 19, 2013 AND STANDARD PLAN ES-1C DATED MAY 20, 2011 - PAGE 427 OF THE STANDARD PLANS BOOK DATED 2010.

REVISED STANDARD PLAN RSP ES-1C

2010 REVISED STANDARD PLAN RSP ES-1C

1-22-16

Dist	COUNTY	ROUTE	POST MILES TOTAL PROJECT	SHEET No.	TOTAL SHEETS
04	Son	1	30.5	66	97

Theresa Gabriel
REGISTERED ELECTRICAL ENGINEER

October 30, 2015
PLANS APPROVAL DATE

REGISTERED PROFESSIONAL ENGINEER
Theresa Aziz Gabriel
No. E15129
Exp. 6-30-16
ELECTRICAL
STATE OF CALIFORNIA

THE STATE OF CALIFORNIA OR ITS OFFICERS OR AGENTS SHALL NOT BE RESPONSIBLE FOR THE ACCURACY OR COMPLETENESS OF SCANNED COPIES OF THIS PLAN SHEET.

TO ACCOMPANY PLANS DATED 6-27-16

2010 REVISED STANDARD PLAN RSP ES-4A

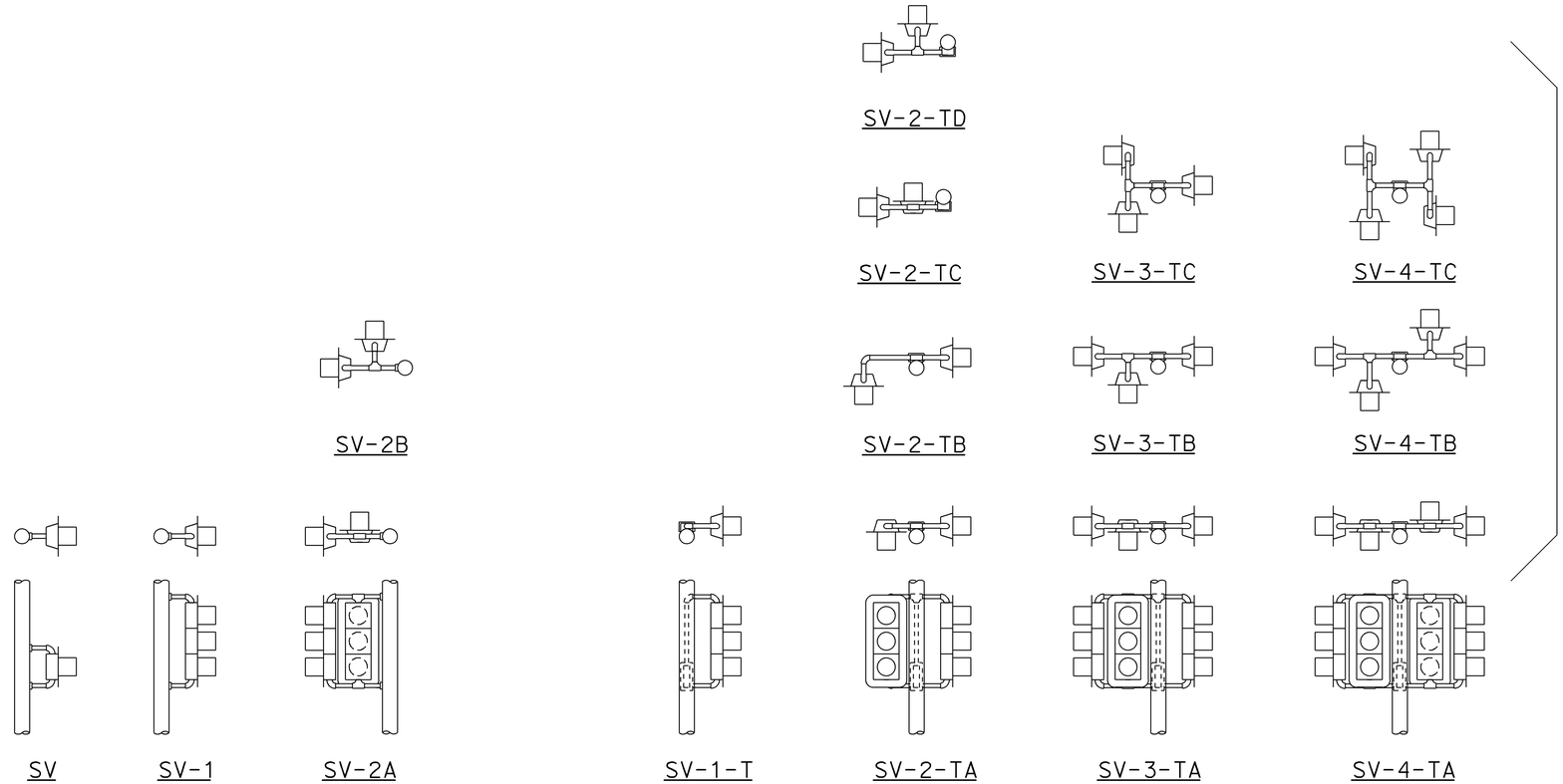

SIDE MOUNTINGS

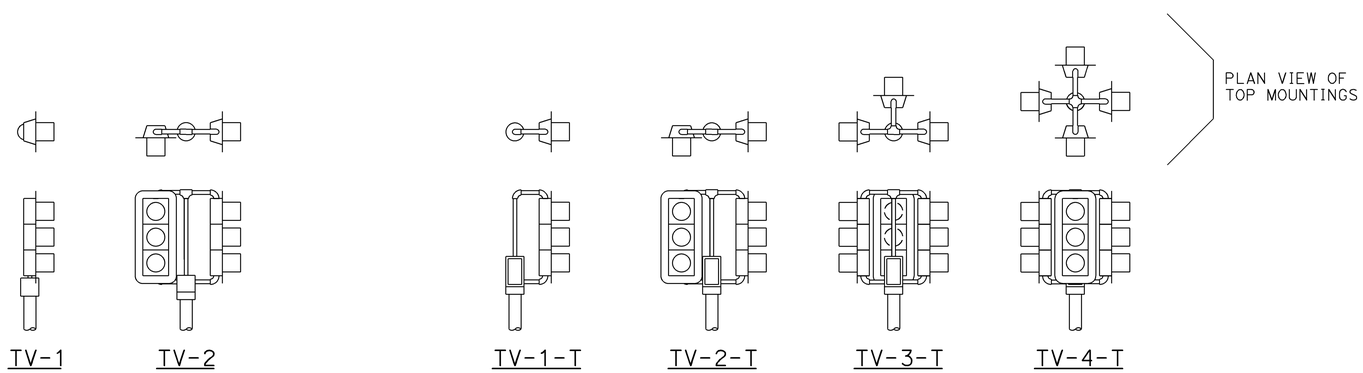

TOP MOUNTINGS

ABBREVIATIONS:

SV	SIDE MOUNTED SIGNAL HEADS
T	TERMINAL COMPARTMENT
TV	TOP MOUNTED SIGNAL HEADS
1, 2, 3, 4	NUMBER OF SIGNAL FACES (3 - SECTION, UNLESS OTHERWISE INDICATED)
A, B, C, D	CONFIGURATION OF SIGNALS

NOTES:

1. Mountings shall be oriented to provide maximum horizontal clearance to adjacent roadway.
2. Bracket arms shall be long enough to permit proper alignment of signals and backplate installation.
3. See Revised Standard Plans RSP ES-4D and RSP ES-4E for attachment fitting details.

STATE OF CALIFORNIA
DEPARTMENT OF TRANSPORTATION

ELECTRICAL SYSTEMS (SIGNAL HEADS AND MOUNTINGS)

NO SCALE

RSP ES-4A DATED OCTOBER 30, 2015 SUPERSEDES RSP ES-4A DATED JULY 19, 2013 AND STANDARD PLAN ES-4A DATED MAY 20, 2011 - PAGE 443 OF THE STANDARD PLANS BOOK DATED 2010.

REVISED STANDARD PLAN RSP ES-4A

9-28-15

Dist	COUNTY	ROUTE	POST MILES TOTAL PROJECT	SHEET No.	TOTAL SHEETS
04	Son	1	30.5	67	97

Theresa Gabriel
REGISTERED ELECTRICAL ENGINEER

October 30, 2015
PLANS APPROVAL DATE

REGISTERED PROFESSIONAL ENGINEER Theresa Aziz Gabriel No. E15129 Exp. 6-30-16 ELECTRICAL STATE OF CALIFORNIA

THE STATE OF CALIFORNIA OR ITS OFFICERS OR AGENTS SHALL NOT BE RESPONSIBLE FOR THE ACCURACY OR COMPLETENESS OF SCANNED COPIES OF THIS PLAN SHEET.

TO ACCOMPANY PLANS DATED 6-27-16

2010 REVISED STANDARD PLAN RSP ES-4C

VISORS

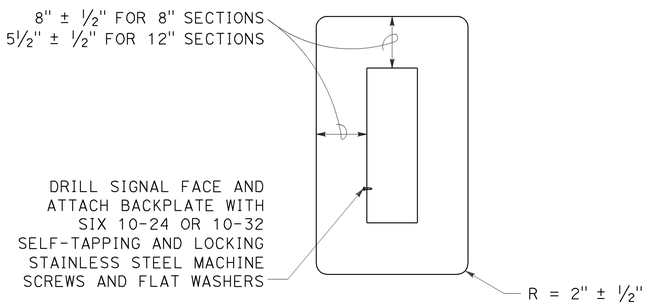

8" AND 12" SECTIONS

BACKPLATE

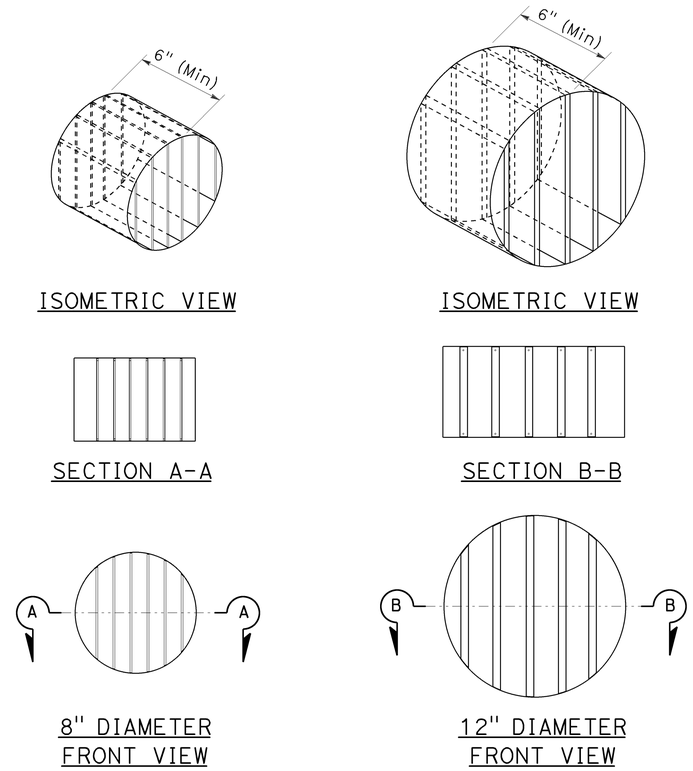

DIRECTIONAL LOUVER

Directional louvers shall be oriented and secured in place with one plated brass machine screw and nut.

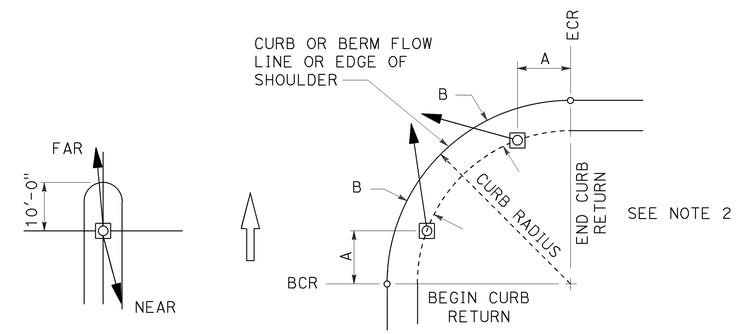

NOTES:

1. Typical signal pole placement unless dimensioned on plans.
2. For A and B dimensions, see Pole Schedule.

SIGNAL STANDARD PLACEMENT DIMENSIONS AND EQUIPMENT LOCATIONS

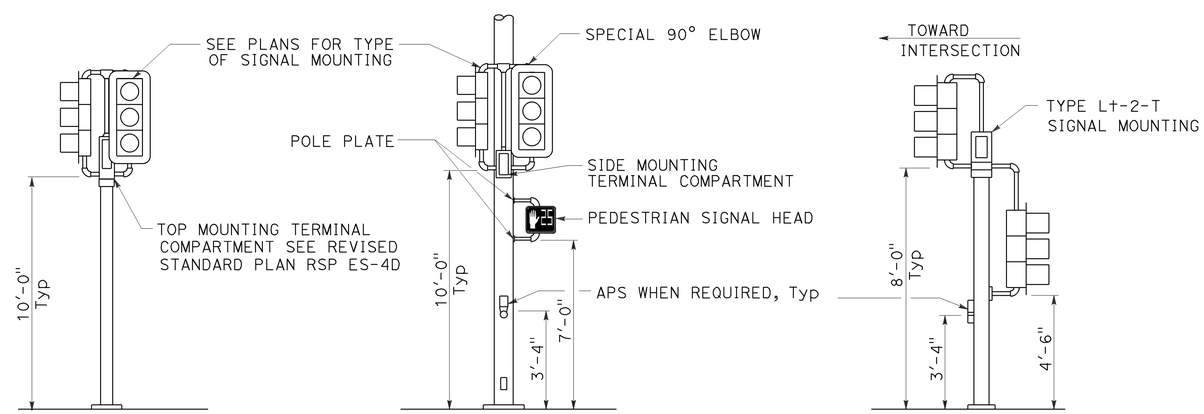

TOP MOUNTED SIGNALS (TV)

Type 1-A, 1-B, 1-C and 1-D standard as indicated on the plans

SIDE MOUNTED SIGNALS (SV AND SP)

Normally used on standards with luminaire or signal mast arm

LEFT TURN LANE SIGNAL

Type 1-A, 1-B, 1-C and 1-D standard as indicated on plans

TYPICAL SIGNAL HEAD INSTALLATIONS

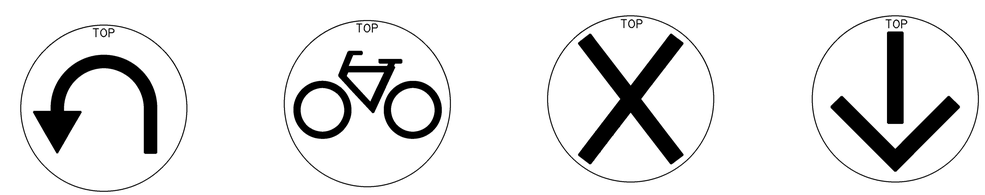

U-TURN | BICYCLE | LANE CONTROL | LANE CONTROL

SIGNAL FACES

STATE OF CALIFORNIA
DEPARTMENT OF TRANSPORTATION

ELECTRICAL SYSTEMS (SIGNAL HEADS AND MOUNTINGS)

NO SCALE

RSP ES-4C DATED OCTOBER 30, 2015 SUPERSEDES RSP ES-4C DATED JULY 19, 2013 AND STANDARD PLAN ES-4C DATED MAY 20, 2011 - PAGE 445 OF THE STANDARD PLANS BOOK DATED 2010.

REVISED STANDARD PLAN RSP ES-4C

Dist	COUNTY	ROUTE	POST MILES TOTAL PROJECT	SHEET No.	TOTAL SHEETS
04	Son	1	30.5	68	97

Theresa Gabriel
REGISTERED ELECTRICAL ENGINEER

October 30, 2015
PLANS APPROVAL DATE

REGISTERED PROFESSIONAL ENGINEER Theresa Aziz Gabriel No. E15129 Exp. 6-30-16 ELECTRICAL STATE OF CALIFORNIA

THE STATE OF CALIFORNIA OR ITS OFFICERS OR AGENTS SHALL NOT BE RESPONSIBLE FOR THE ACCURACY OR COMPLETENESS OF SCANNED COPIES OF THIS PLAN SHEET.

TO ACCOMPANY PLANS DATED 6-27-16

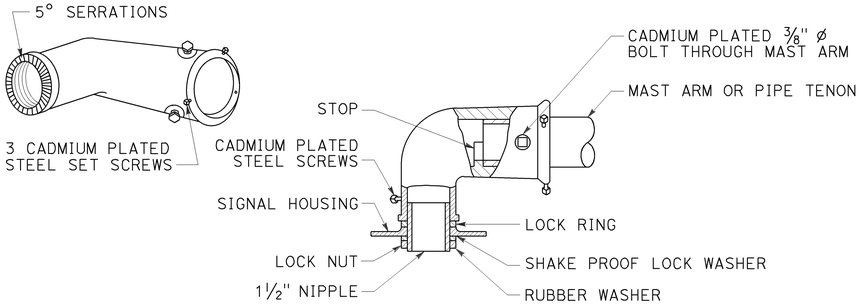

TYPE MAT
MAST ARM MOUNTING
For 2 NPS pipe, see Note 1.

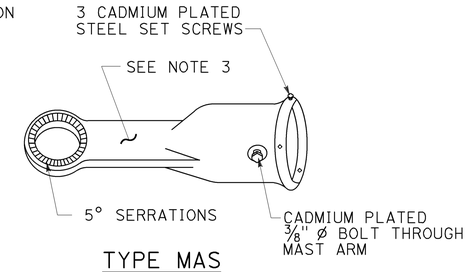

TYPE MAS
MAST ARM MOUNTING
For 2 NPS pipe, see Note 1.

SIGNAL SLIP FITTERS

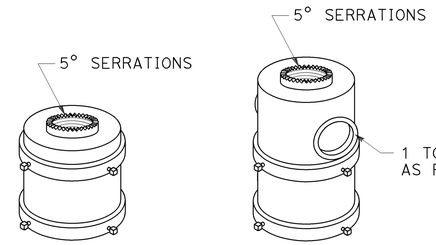

FOR ONE MOUNTING FOR MULTIPLE MOUNTINGS

TOP MOUNTINGS
For 4 NPS pipe, see Note 2.

NOTES:

1. After mast arm signal has been plumbed and secured, drill 7/16" hole through mast arm tenon in line with slip fitter hole. Place a cadmium plated ⅜" ø galvanized bolt with washer under bolt head through hole and secure with washer, nut, and locknut. Seal openings between mast arm mountings and mast arm with mastic.
2. (A) Threaded top mounted slip fitter openings shall be 1½ NPS.
   (B) Serrations in fittings shall match those on bottom of signal heads or in lock ring.
   (C) Top opening shall be offset when backplate is used.
3. Wireway shall have a cross section area of 0.95 square inch minimum. Minimum width of ½".

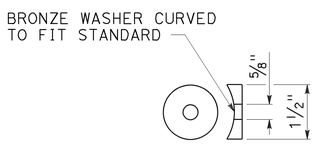

DETAIL C

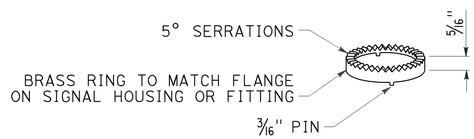

LOCK RING
Use where locking ring is not integral With signal housing or fitting.

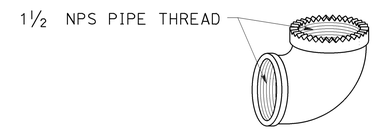

SPECIAL 90° ELBOW
One for each signal head, except those With special slip fitter mounting

MISCELLANEOUS MOUNTING HARDWARE

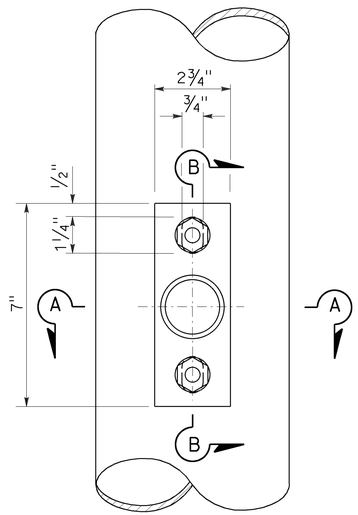

TOP VIEW

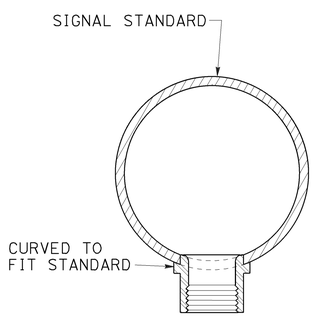

SECTION A-A

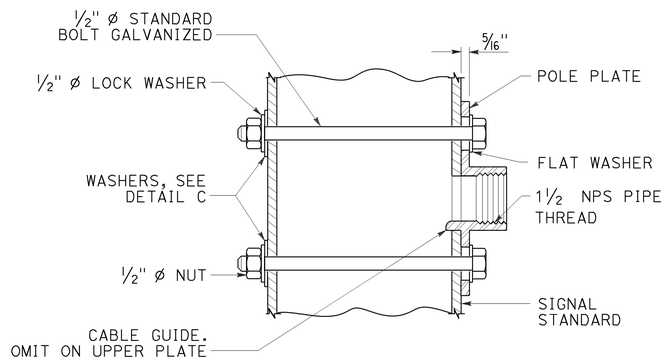

SECTION B-B

POLE PLATE FOR SIDE MOUNTED SIGNAL HEAD
WITHOUT TERMINAL COMPARTMENT

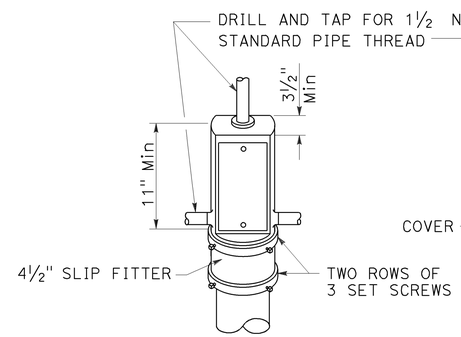

TOP MOUNTING

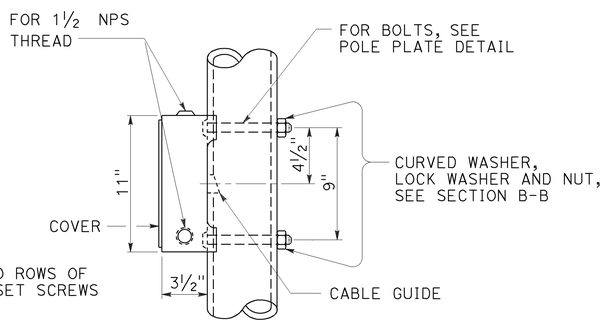

SIDE MOUNTING

TERMINAL COMPARTMENT

STATE OF CALIFORNIA
DEPARTMENT OF TRANSPORTATION

ELECTRICAL SYSTEMS (SIGNAL HEAD MOUNTING)

NO SCALE

RSP ES-4D DATED OCTOBER 30, 2015 SUPERSEDES STANDARD PLAN ES-4D DATED MAY 20, 2011 - PAGE 446 OF THE STANDARD PLANS BOOK DATED 2010.

REVISED STANDARD PLAN RSP ES-4D

2010 REVISED STANDARD PLAN RSP ES-4D

8-20-15

Dist	COUNTY	ROUTE	POST MILES TOTAL PROJECT	SHEET No.	TOTAL SHEETS
04	Son	1	30.5	69	97

Theresa Gabriel
REGISTERED ELECTRICAL ENGINEER

April 15, 2016
PLANS APPROVAL DATE

REGISTERED PROFESSIONAL ENGINEER
Theresa Aziz Gabriel
No. E15129
Exp. 6-30-16
ELECTRICAL
STATE OF CALIFORNIA

THE STATE OF CALIFORNIA OR ITS OFFICERS OR AGENTS SHALL NOT BE RESPONSIBLE FOR THE ACCURACY OR COMPLETENESS OF SCANNED COPIES OF THIS PLAN SHEET.

TO ACCOMPANY PLANS DATED 6-27-16

2010 REVISED STANDARD PLAN RSP ES-5A

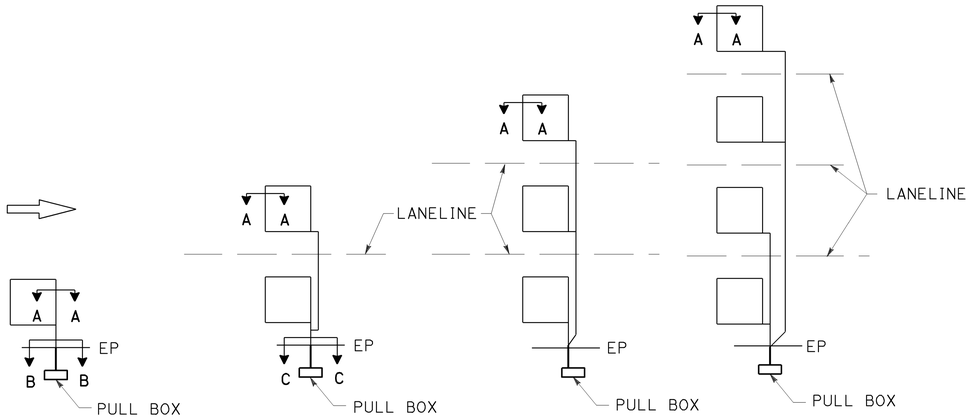

SAW CUT DETAILS

Type A loop detector configurations illustrated

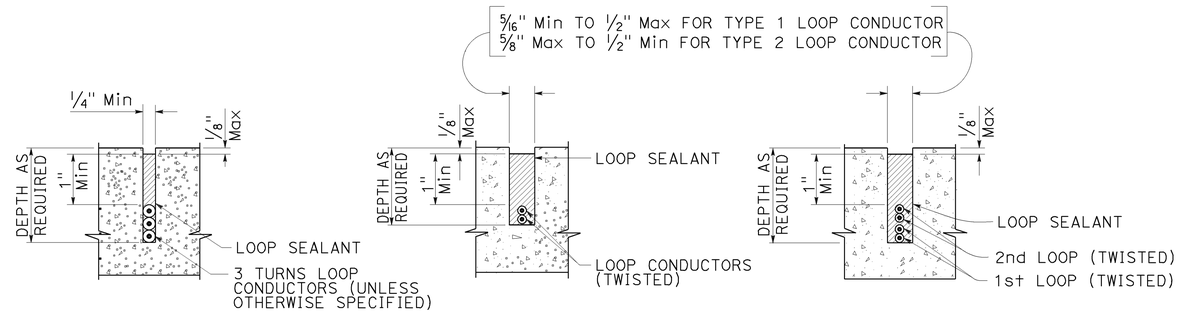

SECTION A-A SECTION B-B SECTION C-C

SLOT DETAILS - TYPE 1 AND TYPE 2 LOOP CONDUCTOR

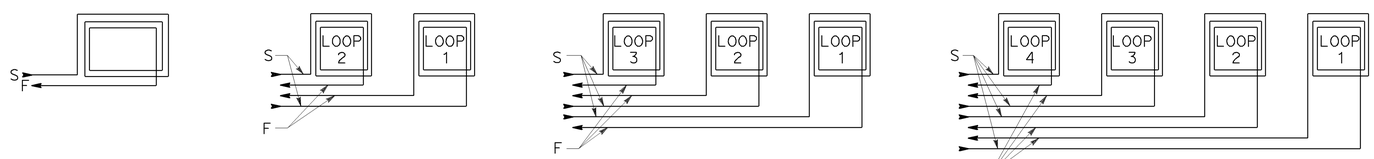

WINDING DETAILS

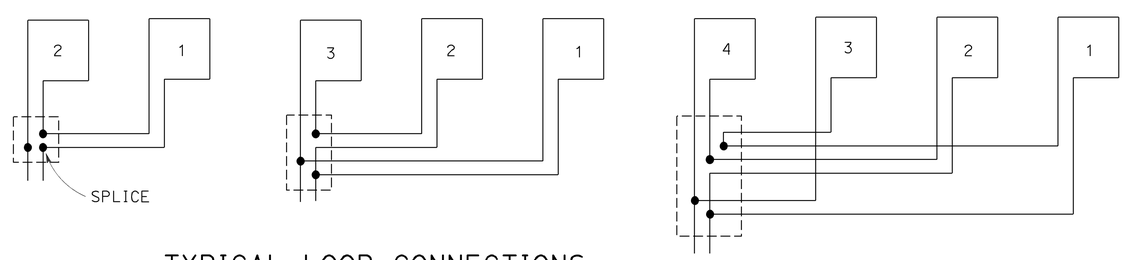

TYPICAL LOOP CONNECTIONS

Dashed lines represent the pull box

ABBREVIATIONS:

S - START
F - FINISH

STATE OF CALIFORNIA
DEPARTMENT OF TRANSPORTATION

ELECTRICAL SYSTEMS (LOOP DETECTORS)

NO SCALE

RSP ES-5A DATED APRIL 15, 2016 SUPERSEDES RSP ES-5A DATED OCTOBER 30, 2015 AND STANDARD PLAN ES-5A DATED MAY 20, 2011 - PAGE 448 OF THE STANDARD PLANS BOOK DATED 2010.

REVISED STANDARD PLAN RSP ES-5A

Dist	COUNTY	ROUTE	POST MILES TOTAL PROJECT	SHEET No.	TOTAL SHEETS
04	Son	1	30.5	70	97

Theresa Gabriel
REGISTERED ELECTRICAL ENGINEER

April 15, 2016
PLANS APPROVAL DATE

REGISTERED PROFESSIONAL ENGINEER
Theresa Aziz Gabriel
No. E15129
Exp. 6-30-16
ELECTRICAL
STATE OF CALIFORNIA

THE STATE OF CALIFORNIA OR ITS OFFICERS OR AGENTS SHALL NOT BE RESPONSIBLE FOR THE ACCURACY OR COMPLETENESS OF SCANNED COPIES OF THIS PLAN SHEET.

TO ACCOMPANY PLANS DATED 6-27-16

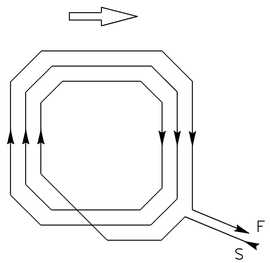

WINDING DETAIL

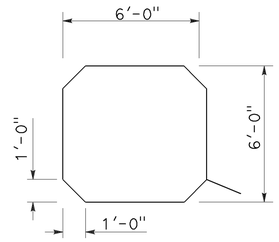

SAW CUT DETAIL

TYPE A LOOP DETECTOR CONFIGURATION

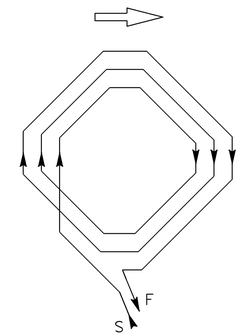

WINDING DETAIL

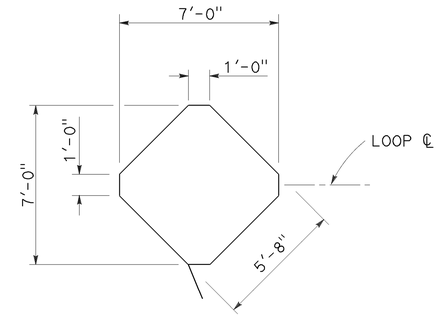

SAW CUT DETAIL

TYPE B LOOP DETECTOR CONFIGURATION

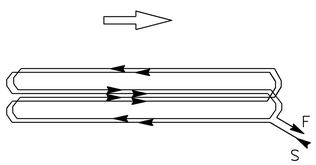

WINDING DETAIL

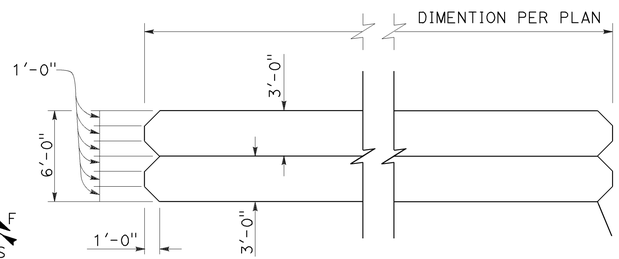

SAW CUT DETAIL

TYPE C LOOP DETECTOR CONFIGURATION

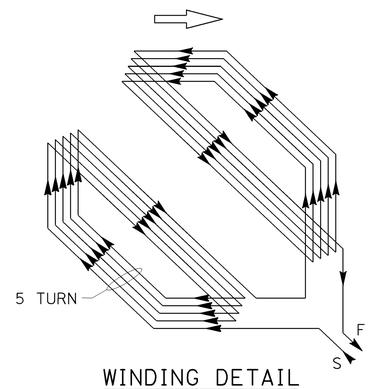

WINDING DETAIL

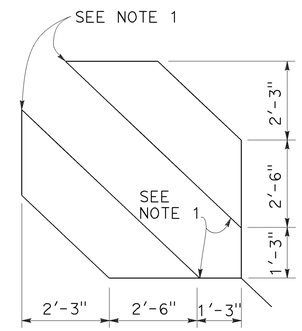

SAW CUT DETAIL

TYPE D LOOP DETECTOR CONFIGURATION

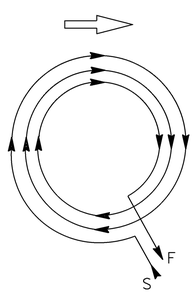

WINDING DETAIL

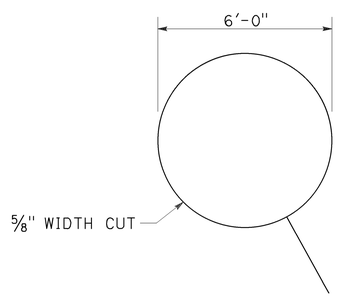

SAW CUT DETAIL

TYPE E LOOP DETECTOR CONFIGURATION

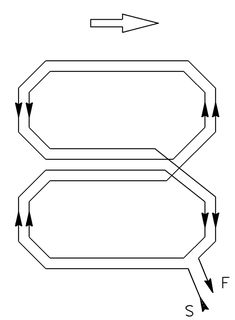

WINDING DETAIL

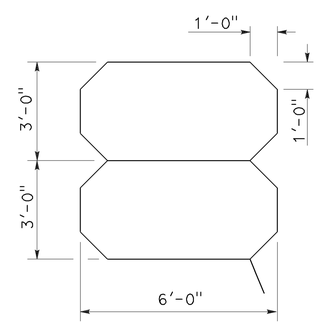

SAW CUT DETAIL

TYPE Q LOOP DETECTOR CONFIGURATION

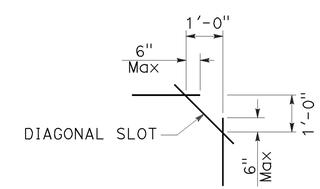

PLAN VIEW OF DIAGONAL SLOT AT CORNERS

NOTES:

1. Round corners of acute angle saw cuts to prevent damage to conductors.
2. Typical distance separating loops from edge to edge is 10' for Type A, B, D and E installation in single lane.
3. Use Type D loops for limit line detection and bicycle lanes.

STATE OF CALIFORNIA
DEPARTMENT OF TRANSPORTATION

ELECTRICAL SYSTEMS (DETECTORS)

NO SCALE

RSP ES-5B DATED APRIL 15, 2016 SUPERSEDES RSP ES-5B DATED OCTOBER 30, 2015 AND RSP ES-5B DATED JULY 19, 2013 AND STANDARD PLAN ES-5B DATED MAY 20, 2011 - PAGE 449 OF THE STANDARD PLANS BOOK DATED 2010.

REVISED STANDARD PLAN RSP ES-5B

2010 REVISED STANDARD PLAN RSP ES-5B

1-22-16

Dist	COUNTY	ROUTE	POST MILES TOTAL PROJECT	SHEET No.	TOTAL SHEETS
04	Son	1	30.5	71	97

Theresa Gabriel
REGISTERED ELECTRICAL ENGINEER

October 30, 2015
PLANS APPROVAL DATE

REGISTERED PROFESSIONAL ENGINEER
Theresa Aziz Gabriel
No. E15129
Exp. 6-30-16
ELECTRICAL
STATE OF CALIFORNIA

THE STATE OF CALIFORNIA OR ITS OFFICERS OR AGENTS SHALL NOT BE RESPONSIBLE FOR THE ACCURACY OR COMPLETENESS OF SCANNED COPIES OF THIS PLAN SHEET.

TO ACCOMPANY PLANS DATED 6-27-16

NOTES:

1. Back casting shape to fit curvature of pole.
2. Provide cover fitting for top of post, when PBA is mounted on push button assembly post.
3. Install push button on crosswalk side of standard.
4. Use R10 series regulatory signs and plaques for pedestrian and bicycle facilities.

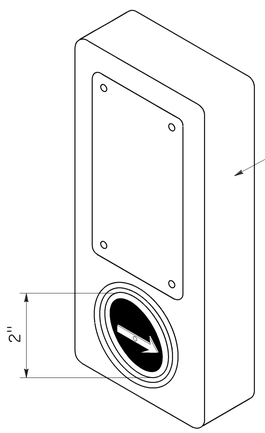

ACCESSIBLE PEDESTRIAN SIGNAL

DETAIL A

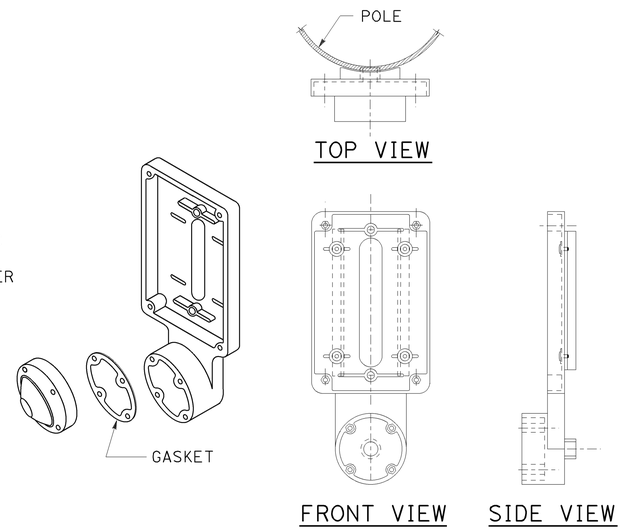

TYPE B PUSH BUTTON ASSEMBLY

DETAIL B

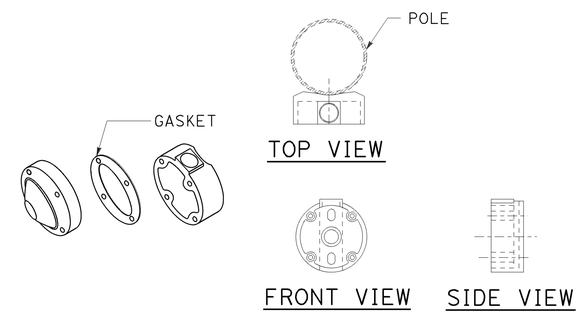

TYPE C PUSH BUTTON ASSEMBLY

DETAIL C

STATE OF CALIFORNIA
DEPARTMENT OF TRANSPORTATION

ELECTRICAL SYSTEMS (ACCESSIBLE PEDESTRIAN SIGNAL AND PUSH BUTTON ASSEMBLIES)

NO SCALE

RSP ES-5C DATED OCTOBER 30, 2015 SUPERSEDES RSP ES-5C DATED JULY 19, 2013 AND STANDARD PLAN ES-5C DATED MAY 20, 2011 - PAGE 450 OF THE STANDARD PLANS BOOK DATED 2010.

REVISED STANDARD PLAN RSP ES-5C

2010 REVISED STANDARD PLAN RSP ES-5C

8-24-15

Dist	COUNTY	ROUTE	POST MILES TOTAL PROJECT	SHEET No.	TOTAL SHEETS
04	Son	1	30.5	72	97

Theresa Gabriel
REGISTERED ELECTRICAL ENGINEER

October 30, 2015
PLANS APPROVAL DATE

REGISTERED PROFESSIONAL ENGINEER Theresa Aziz Gabriel No. E15129 Exp. 6-30-16 ELECTRICAL STATE OF CALIFORNIA

THE STATE OF CALIFORNIA OR ITS OFFICERS OR AGENTS SHALL NOT BE RESPONSIBLE FOR THE ACCURACY OR COMPLETENESS OF SCANNED COPIES OF THIS PLAN SHEET.

TO ACCOMPANY PLANS DATED 6-27-16

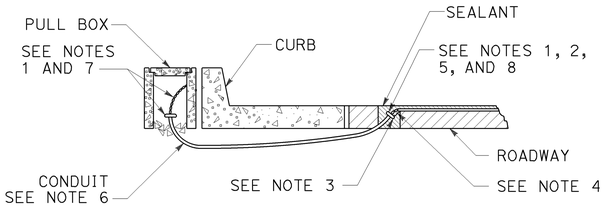

TYPE A
CURB TERMINATION DETAIL

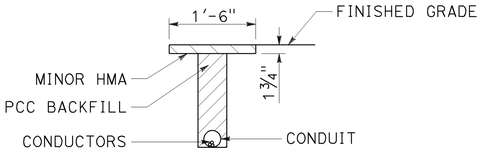

"T" TRENCH
DETAIL T

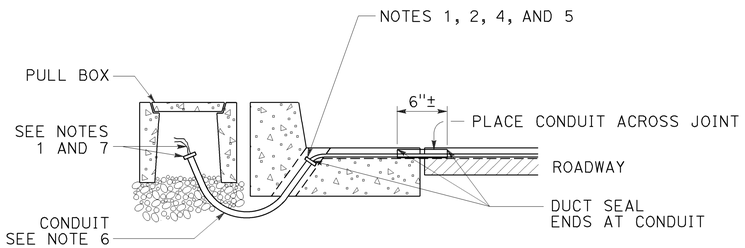

CROSS SECTION

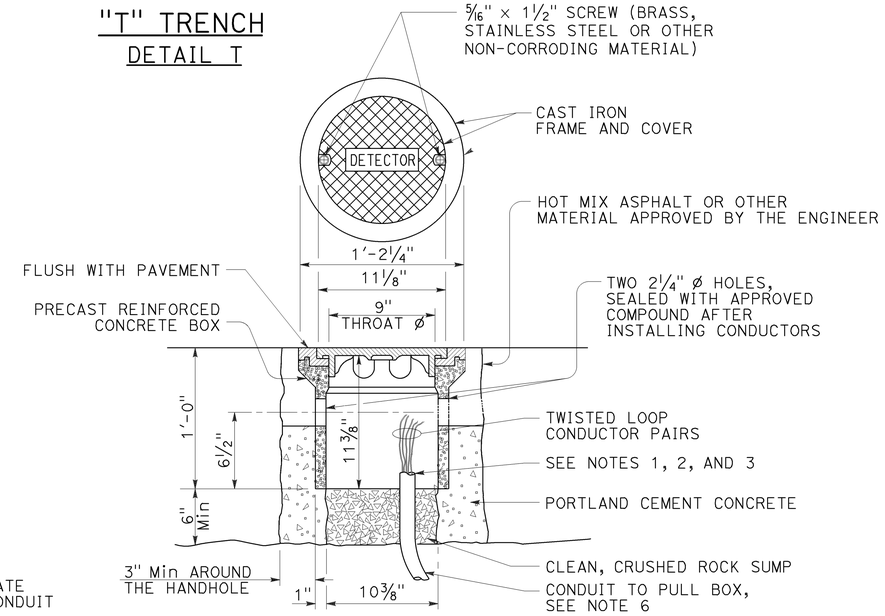

DETECTOR HANDHOLE DETAIL

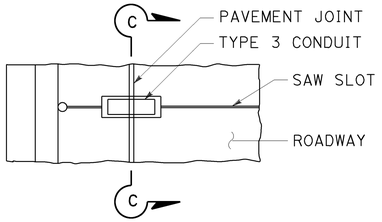

PLAN VIEW

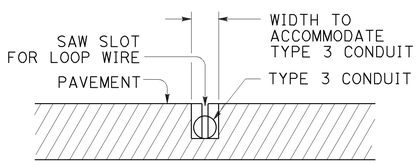

SECTION C-C

TYPE B
CURB TERMINATION DETAIL

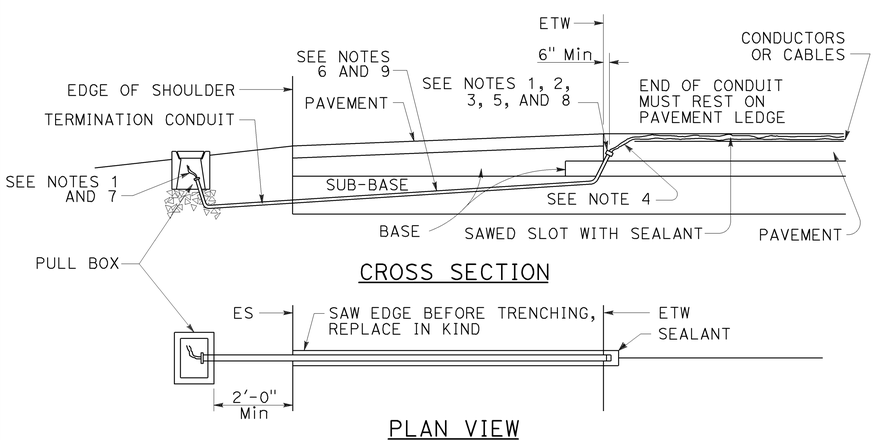

CROSS SECTION

PLAN VIEW

SHOULDER TERMINATION DETAILS

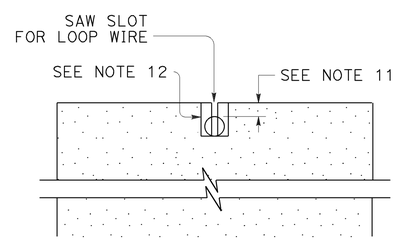

SECTION A-A

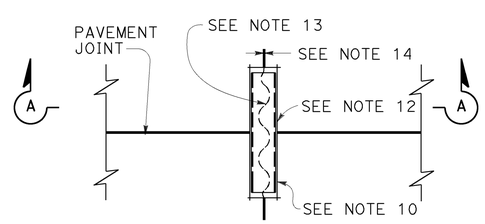

PLAN VIEW

TYPICAL LOOP LEAD-IN DETAIL AT PAVEMENT JOINT

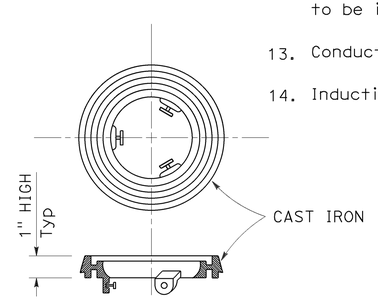

LOCKING GRADE RING

NOTES:

1. Bushing shall be used at end of conduit.
2. Tape detector conductors or cables 3" each side of bushings.
3. Install duct seal compound to each end of termination conduit before installing sealant.
4. Round all sharp edges where detector conductors or cables have to pass.
5. End of conduit shall be 3⅛" below roadway surface.
6.

Conduit size	Loop conductors
1"C minimum	1 to 2 pairs
1½"C minimum	3 to 4 pairs
2"C minimum	5 or more pairs

7. Splice detector conductors or cables to detector lead-in-cable.
8. Location of detector handhole when shown on plans.
9. When the shoulder and traveled way are paved with the same material and there is no joint between them, the conduit shall extend only 2'-0" into the shoulder pavement.
10. ¾"C, Type 3 conduit 6" long minimum, plug both ends with duct compound to keep out sealant.
11. ½" Minimum between top of conduit and pavement surface.
12. Sawcut shall not exceed 1" in width and ⅛" longer than conduit to be installed.
13. Conductors with ½" minimum slack inside conduit.
14. Inductive loop detector saw slot.

STATE OF CALIFORNIA
DEPARTMENT OF TRANSPORTATION

ELECTRICAL SYSTEMS (CURB AND SHOULDER TERMINATION, TRENCH, AND HANDHOLE DETAILS)

NO SCALE

RSP ES-5D DATED OCTOBER 30, 2015 SUPERSEDES RSP ES-5D DATED JULY 19, 2013 AND STANDARD PLAN ES-5D DATED MAY 20, 2011 - PAGE 451 OF THE STANDARD PLANS BOOK DATED 2010.

REVISED STANDARD PLAN RSP ES-5D

2010 REVISED STANDARD PLAN RSP ES-5D

8-19-15

DIST	COUNTY	ROUTE	POST MILES TOTAL PROJECT	SHEET NO.	TOTAL SHEETS
04	Son	1	30.5	73	97

Theresa Gabriel
REGISTERED ELECTRICAL ENGINEER

April 15, 2016
PLANS APPROVAL DATE

REGISTERED PROFESSIONAL ENGINEER Theresa Aziz Gabriel No. E15129 Exp. 6-30-16 ELECTRICAL STATE OF CALIFORNIA

THE STATE OF CALIFORNIA OR ITS OFFICERS OR AGENTS SHALL NOT BE RESPONSIBLE FOR THE ACCURACY OR COMPLETENESS OF SCANNED COPIES OF THIS PLAN SHEET.

TO ACCOMPANY PLANS DATED 6-27-16

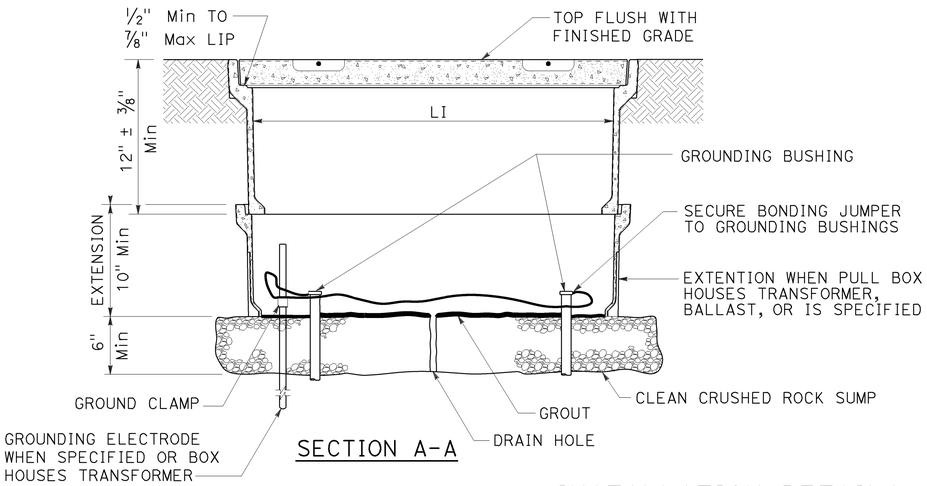

SECTION A-A

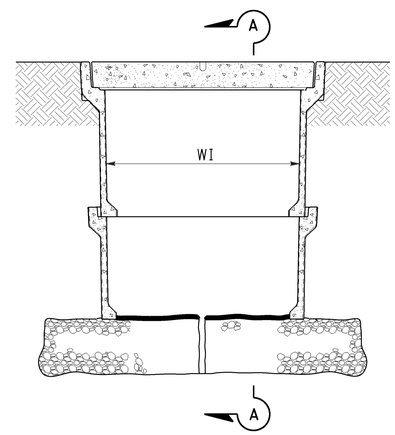

SIDE VIEW

INSTALLATION DETAILS

DETAIL A

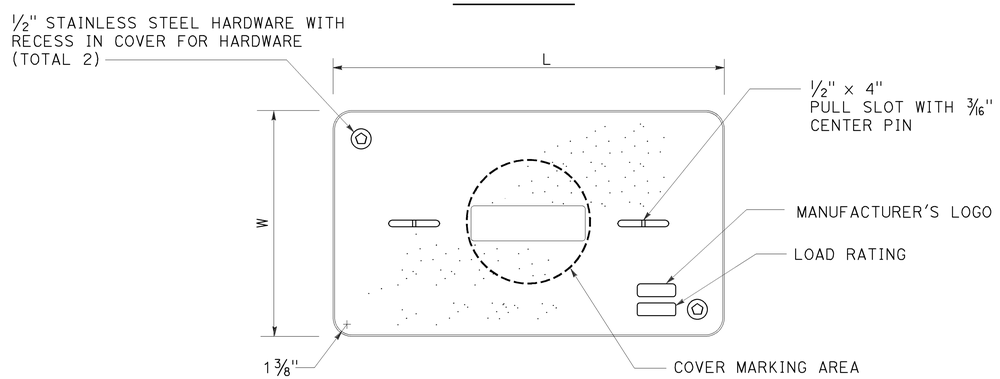

COVER TOP VIEW

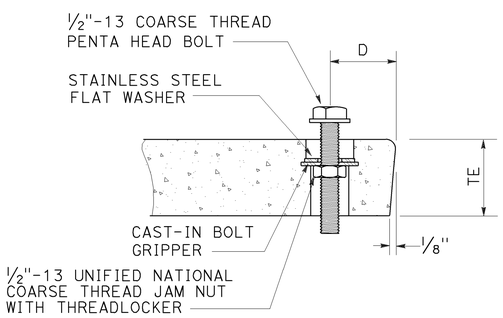

TYPICAL COVER CAPTIVE BOLT

OR SIMILAR

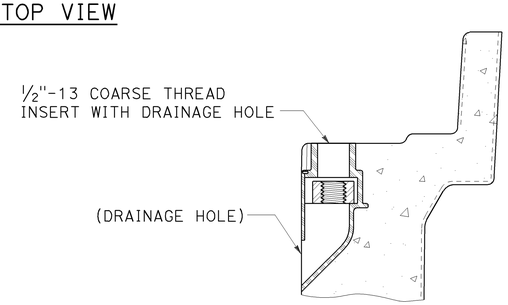

TYPICAL THREADED INSERT

OR SIMILAR

DIMENSION TABLE

PULL BOX	PULL BOX					COVER				
	MINIMUM DEPTH BOX	MINIMUM DEPTH EXTENSION	MINIMUM WEIGHT	LI Min	WI Min	TE	D	L	W	MINIMUM WEIGHT
No. 3 1/2	12"	N/A	40 lb	1' - 3"	9"	1 3/4"	1 3/4"	1'-3 1/4" - 1'-3 3/8"	10" - 10 1/8"	30 lb
No. 5	12"	10"	55 lb	1' - 8"	11"	2"	1 3/4"	1'-11 1/4"	1'-1 3/4"	60 lb
No. 6	12"	10"	70 lb	2' - 4 1/4"	1' - 3 1/4"	2"	2"	2'-6 1/2"	1'-5 1/2"	85 lb

NOTES:

1. The nominal dimensions of the opening in which the cover sets shall be the same as the cover dimensions except the length and width dimensions shall be 1/8" greater.
2. Covers and boxes shall be interchangeable with California standard male and female gages. When interchanged with a standard male or female gage, the top surfaces shall be flush within 1/8". Top outside radius of covers and pull boxes shall have a 1/8" radius.
3. Dimensions for the cover for non-traffic pull box are nominal values.

STATE OF CALIFORNIA
DEPARTMENT OF TRANSPORTATION

ELECTRICAL SYSTEMS (NON-TRAFFIC PULL BOX)

NO SCALE

RSP ES-8A DATED APRIL 15, 2016 SUPERSEDES RSP ES-8A DATED OCTOBER 30, 2015 AND RSP ES-8A DATED JULY 19, 2013 AND RSP ES-8A DATED JANUARY 20, 2012 THAT SUPPLEMENTS THE STANDARD PLANS BOOK DATED 2010.

REVISED STANDARD PLAN RSP ES-8A

2010 REVISED STANDARD PLAN RSP ES-8A

1-22-16

DIST	COUNTY	ROUTE	POST MILES TOTAL PROJECT	SHEET NO.	TOTAL SHEETS
04	Son	1	30.5	74	97

Theresa Gabriel
REGISTERED ELECTRICAL ENGINEER

April 15, 2016
PLANS APPROVAL DATE

REGISTERED PROFESSIONAL ENGINEER
Theresa Aziz Gabriel
No. E15129
Exp. 6-30-16
ELECTRICAL
STATE OF CALIFORNIA

THE STATE OF CALIFORNIA OR ITS OFFICERS OR AGENTS SHALL NOT BE RESPONSIBLE FOR THE ACCURACY OR COMPLETENESS OF SCANNED COPIES OF THIS PLAN SHEET.

TO ACCOMPANY PLANS DATED 6-27-16

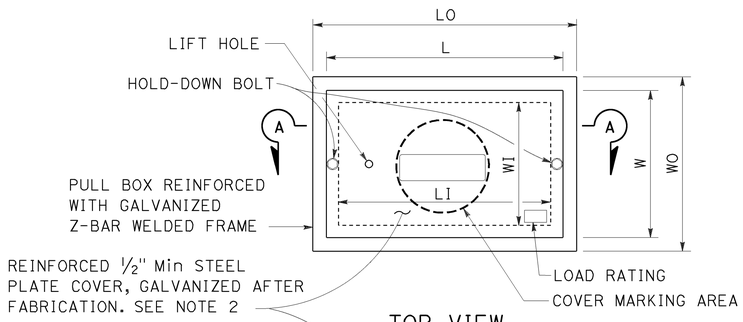

TOP VIEW

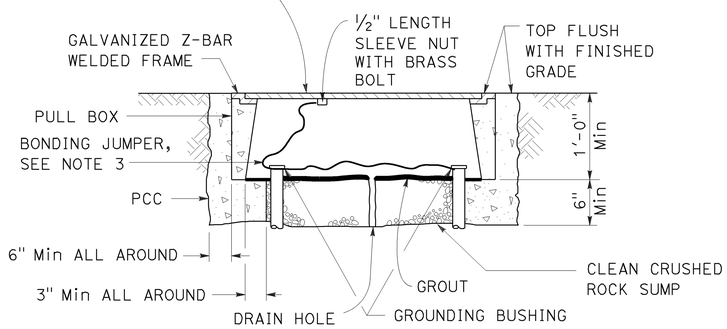

SECTION A-A

No. 3½(T), No. 5(T) AND No. 6(T) TRAFFIC PULL BOX

NOTES:

1. Traffic pull box shall be provided with steel cover and special concrete footing. Steel cover shall have embossed non-skid pattern.
2. Steel reinforcing shall be as regularly used in the standard products of the respective manufacturer.
3. Bonding jumper for metal covers shall be 3' long, minimum.
4. The nominal dimensions of the opening in which the cover sets shall be the same as the cover dimensions except the length and width dimensions shall be ⅛" greater.
5. Covers and boxes shall be interchangeable with California standard male and female gages. When interchanged with a standard male or female gage, the top surfaces shall be flush within ⅛".

DIMENSION TABLE

PULL BOX	PULL BOX						COVER	
	MINIMUM * THICKNESS	MINIMUM DEPTH BOX AND EXTENSION	LO	LI	WO	WI	L **	W **
No. 3½(T)	1½"	1'-0"	1'-10" - 1'-11"	1'-5" - 1'-6½"	1'-3" - 1'-4"	10" - 1'-0"	1'-8" -1'-8½"	1'-1" - 1'-2"
No. 5(T)	1¾"	1'-0"	2'-5" - 2'-6"	2'-0" - 2'-1"	1'-6" - 1'-7"	1'-1" - 1'-2"	2'-3" - 2'-3½"	1'-4" - 1'-4½"
No. 6(T)	2"	1'-0"	2'-11" - 3'-1"	2'-6" - 2'-7"	1'-10" - 2'-0"	1'-5" - 1'-6"	2'-9" - 2'-9½"	1'-8" - 1'-8½"

* EXCLUDING CONDUIT WEB ** TOP DIMENSION

STATE OF CALIFORNIA
DEPARTMENT OF TRANSPORTATION

ELECTRICAL SYSTEMS (TRAFFIC PULL BOX)

NO SCALE

RSP ES-8B DATED APRIL 15, 2016 SUPERSEDES RSP ES-8B DATED OCTOBER 30, 2015 AND RSP ES-8B DATED JULY 19, 2013 AND RSP ES-8B DATED JANUARY 20, 2012 THAT SUPPLEMENTS THE STANDARD PLANS BOOK DATED 2010.

REVISED STANDARD PLAN RSP ES-8B

2010 REVISED STANDARD PLAN RSP ES-8B

1-22-16

Dist	COUNTY	ROUTE	POST MILES TOTAL PROJECT	SHEET No.	TOTAL SHEETS
04	Son	1	30.5	75	97

Theresa Gabriel
REGISTERED ELECTRICAL ENGINEER

October 30, 2015
PLANS APPROVAL DATE

REGISTERED PROFESSIONAL ENGINEER
Theresa Aziz Gabriel
No. E15129
Exp. 6-30-16
ELECTRICAL
STATE OF CALIFORNIA

THE STATE OF CALIFORNIA OR ITS OFFICERS OR AGENTS SHALL NOT BE RESPONSIBLE FOR THE ACCURACY OR COMPLETENESS OF SCANNED COPIES OF THIS PLAN SHEET.

TO ACCOMPANY PLANS DATED 6-27-16

NOTE:
Curves represent the minimum footcandle (FC).

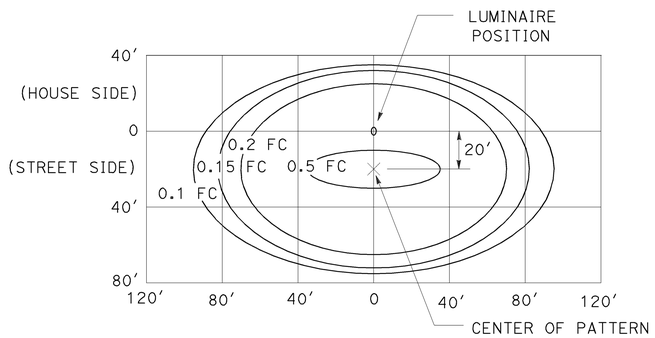

LED LUMINAIRE 165 W
34′ Mounting Height

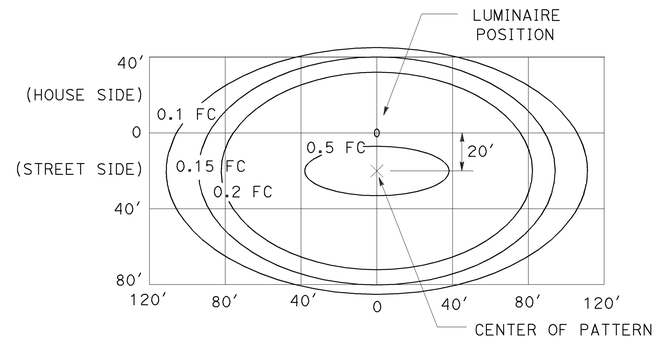

LED LUMINAIRE 235 W
40′ Mounting Height

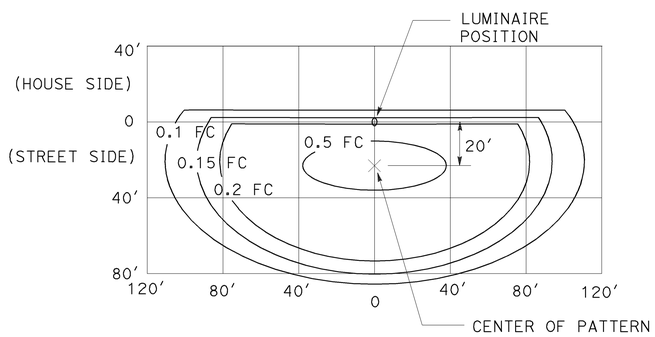

LED LUMINAIRE 235 W
40′ Mounting Height
with back side control

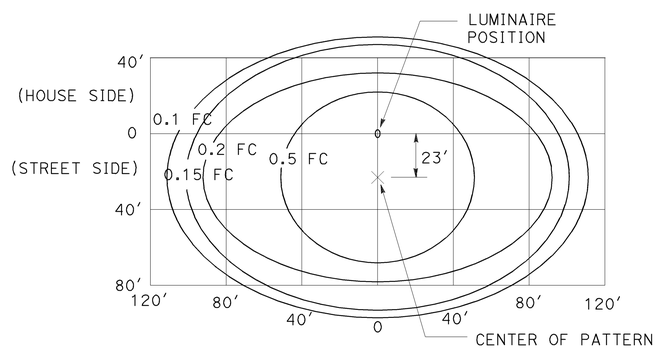

LED LUMINAIRE 300 W
40′ Mounting Height

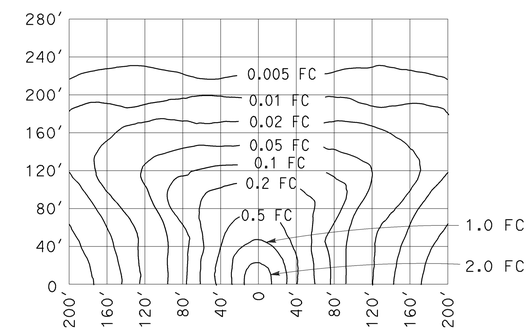

LOW-PRESSURE SODIUM LUMINAIRE 180 W
40′ Mounting Height
Lamp operated at 33,000 lm

STATE OF CALIFORNIA
DEPARTMENT OF TRANSPORTATION

ELECTRICAL SYSTEMS (ISOFOOTCANDLE CURVES)

NO SCALE

RSP ES-10A DATED OCTOBER 30, 2015 SUPERSEDES RSP ES-10A DATED JULY 19, 2013 THAT SUPPLEMENTS THE STANDARD PLANS BOOK DATED 2010.

REVISED STANDARD PLAN RSP ES-10A

2010 REVISED STANDARD PLAN RSP ES-10A

9-29-15

Dist	COUNTY	ROUTE	POST MILES TOTAL PROJECT	SHEET No.	TOTAL SHEETS
04	Son	1	30.5	76	97

Theresa Gabriel
REGISTERED ELECTRICAL ENGINEER

April 15, 2016
PLANS APPROVAL DATE

REGISTERED PROFESSIONAL ENGINEER
Theresa Aziz Gabriel
No. E15129
Exp. 6-30-16
ELECTRICAL
STATE OF CALIFORNIA

THE STATE OF CALIFORNIA OR ITS OFFICERS OR AGENTS SHALL NOT BE RESPONSIBLE FOR THE ACCURACY OR COMPLETENESS OF SCANNED COPIES OF THIS PLAN SHEET.

TO ACCOMPANY PLANS DATED 6-27-16

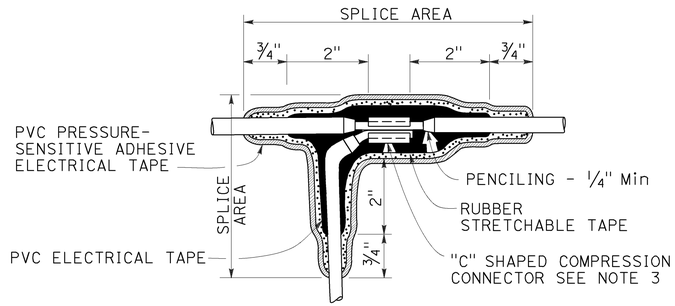

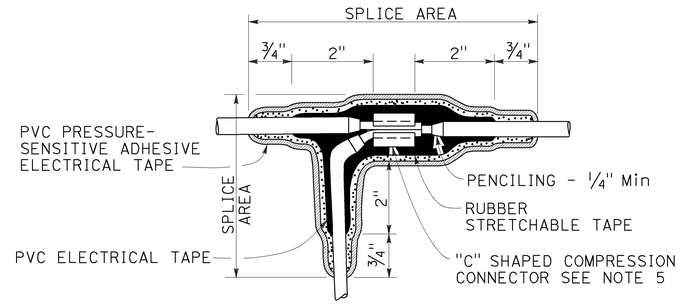

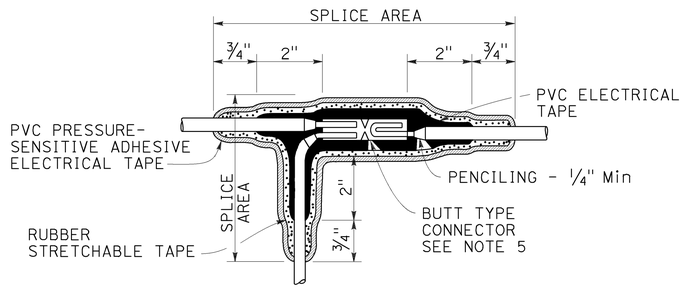

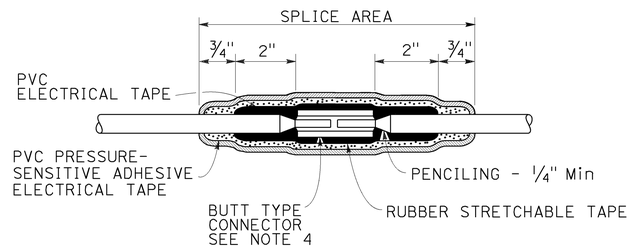

NOTES:

1. Dimensions are minimum.
2. Rubber tapes shall be rolled after application.
3. Between 1 free-end and 1 through conductor.
4. Between 2 free-end conductors.
5. Between 3 free-end conductors.

TYPICAL SPLICE INSULATION METHOD B

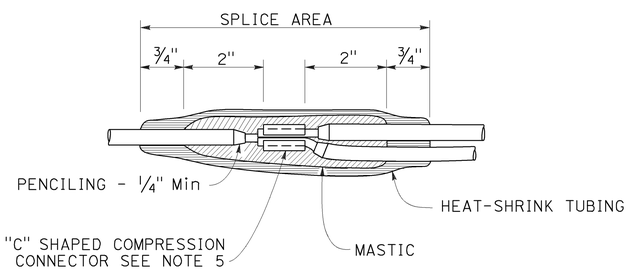

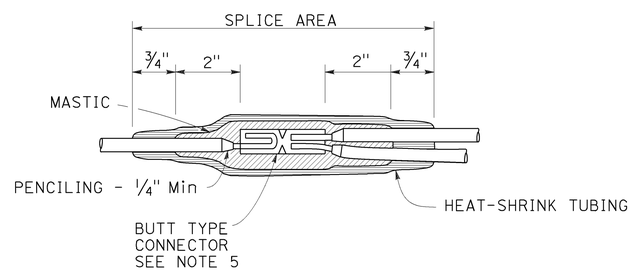

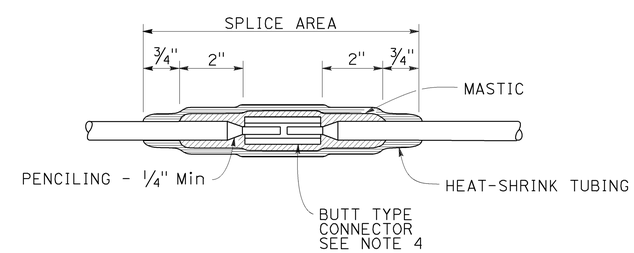

TYPICAL SPLICE INSULATION HEAT-SHRINK TUBING

STATE OF CALIFORNIA
DEPARTMENT OF TRANSPORTATION

ELECTRICAL SYSTEMS (SPLICE INSULATION METHODS DETAILS)

NO SCALE

RSP ES-13A DATED APRIL 15, 2016 SUPERSEDES RSP ES-13A DATED OCTOBER 30, 2015 AND STANDARD PLAN ES-13A DATED MAY 20, 2011 - PAGE 491 OF THE STANDARD PLANS BOOK DATED 2010.

REVISED STANDARD PLAN RSP ES-13A

2010 REVISED STANDARD PLAN RSP ES-13A

1-22-16

Dist	COUNTY	ROUTE	POST MILES TOTAL PROJECT	SHEET No.	TOTAL SHEETS
04	Son	1	30.5	77	97

Theresa Gabriel
REGISTERED ELECTRICAL ENGINEER

April 15, 2016
PLANS APPROVAL DATE

REGISTERED PROFESSIONAL ENGINEER Theresa Aziz Gabriel No. E15129 Exp. 6-30-16 ELECTRICAL STATE OF CALIFORNIA

THE STATE OF CALIFORNIA OR ITS OFFICERS OR AGENTS SHALL NOT BE RESPONSIBLE FOR THE ACCURACY OR COMPLETENESS OF SCANNED COPIES OF THIS PLAN SHEET.

TO ACCOMPANY PLANS DATED 6-27-16

CIRCUIT VOLTAGE	FUSE VOLTAGE RATING	FUSE CURRENT RATING						
		HPS LAMP BALLAST		LOW PRESSURE SODIUM BALLAST	INDUCTION SIGN LIGHTING	SINGLE PHASE (TWO WIRE) TRANSFORMERS (PRIMARY SIDE)		
		70 W	100 W	180 W	85 W	1 kVA	2 kVA	3 kVA
120 V	250 V	5 A	5 A	5 A	5 A	10 A	20 A	30 A
240 V	250 V	5 A	5 A	5 A	5 A	6 A	10 A	20 A
480 V	500-600 V	5 A	5 A	3 A	1 A (SEE NOTE 2)	3 A	6 A	10 A

NOTES:

1. Primary lines of multiple ballasts shall be provided with fused connectors. Fuse ratings shall be as noted above.
2. See Revised Standard Plan RSP ES-15D, Type SC3 control.

FUSE RATINGS FOR FUSED CONNECTORS

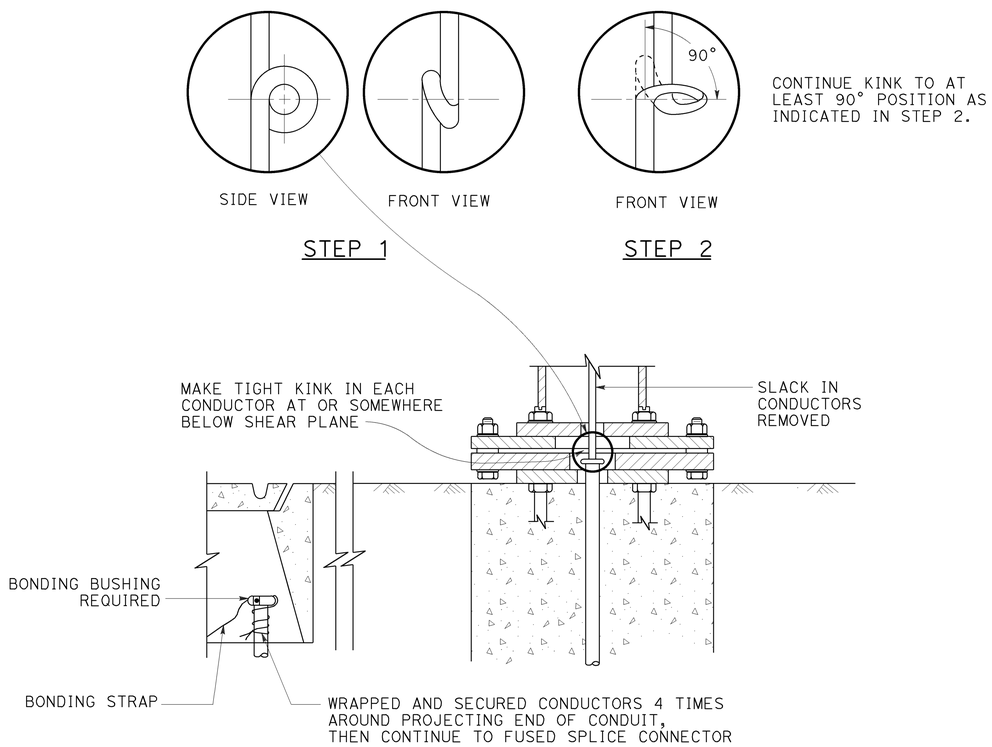

KINKING DETAIL FOR SLIP BASE STANDARDS

DETAIL A

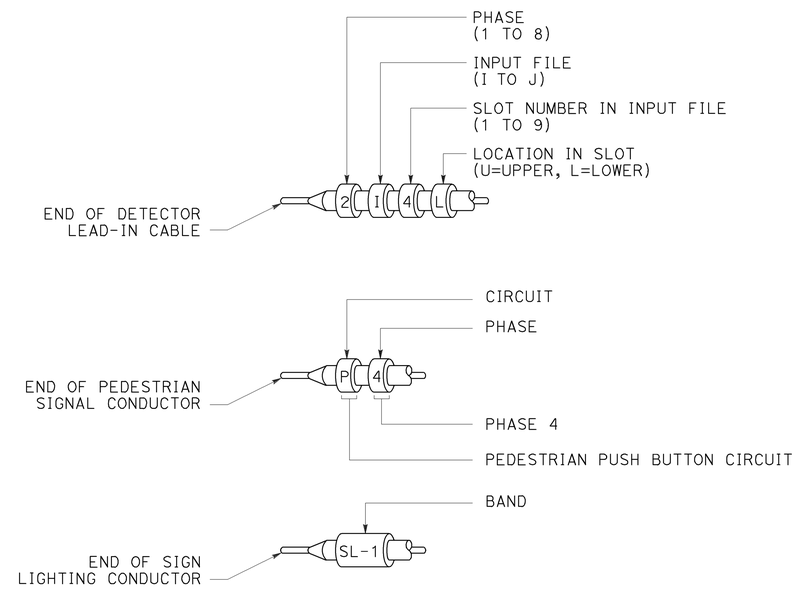

TYPICAL BANDING DETAILS

DETAIL B

STATE OF CALIFORNIA
DEPARTMENT OF TRANSPORTATION

ELECTRICAL SYSTEMS (FUSE RATING, KINKING AND BANDING DETAIL)

NO SCALE

RSP ES-13B DATED APRIL 15, 2016 SUPERSEDES STANDARD PLAN ES-13B DATED MAY 20, 2011 - PAGE 492 OF THE STANDARD PLANS BOOK DATED 2010.

REVISED STANDARD PLAN RSP ES-13B

2010 REVISED STANDARD PLAN RSP ES-13B

1-12-16

Dist	COUNTY	ROUTE	POST MILES TOTAL PROJECT	SHEET No.	TOTAL SHEETS
04	Son	1	30.5	78	97

Theresa Gabriel
REGISTERED ELECTRICAL ENGINEER

April 15, 2016
PLANS APPROVAL DATE

REGISTERED PROFESSIONAL ENGINEER
Theresa Aziz Gabriel
No. E15129
Exp. 6-30-16
ELECTRICAL
STATE OF CALIFORNIA

THE STATE OF CALIFORNIA OR ITS OFFICERS OR AGENTS SHALL NOT BE RESPONSIBLE FOR THE ACCURACY OR COMPLETENESS OF SCANNED COPIES OF THIS PLAN SHEET.

TO ACCOMPANY PLANS DATED 6-27-16

2010 REVISED STANDARD PLAN RSP ES-14B

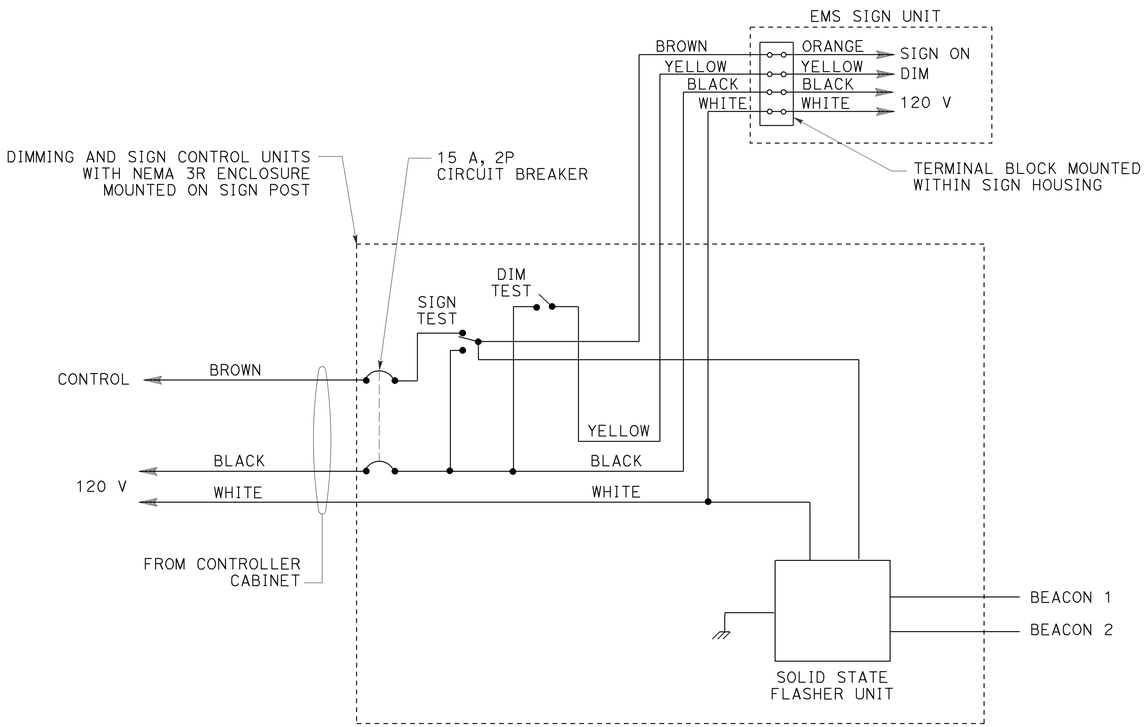

WIRING DIAGRAM
LED EXTINGUISHABLE MESSAGE SIGN
DETAIL A

THE FLASHER SHALL MATE WITH A CINCH-JONES SOCKET S-406-SB OR EQUAL AND CONNECTED AS FOLLOWS:

PIN	CIRCUIT	PIN	CIRCUIT
7	LOAD	10	NEUTRAL
8	LOAD	11	LINE
9	CHASSIS GROUND	12	NOT USED

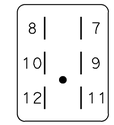

CONNECTOR SOCKET
SOLID STATE FLASHER UNIT

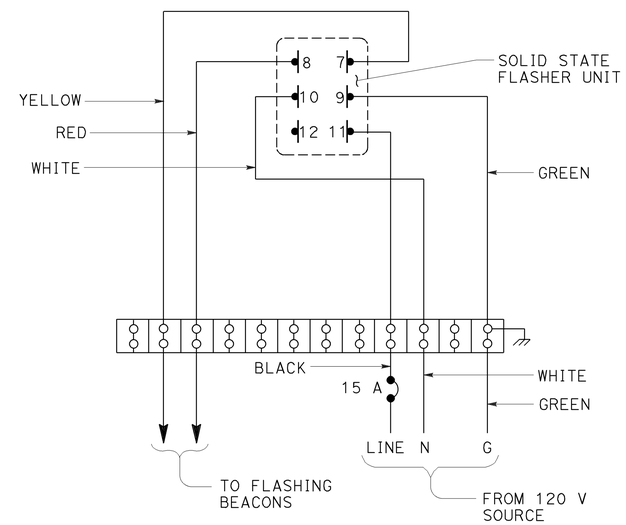

WIRING DIAGRAM
FLASHING BEACON CONTROL ASSEMBLY
DETAIL B

STATE OF CALIFORNIA
DEPARTMENT OF TRANSPORTATION

ELECTRICAL SYSTEMS (CONTROL ASSEMBLY WIRING DIAGRAMS)

NO SCALE

RSP ES-14B DATED APRIL 15, 2016 SUPERSEDES STANDARD PLAN ES-14B DATED MAY 20, 2011 - PAGE 494 OF THE STANDARD PLANS BOOK DATED 2010.

REVISED STANDARD PLAN RSP ES-14B

1-22-16

DIST	COUNTY	ROUTE	POST MILES TOTAL PROJECT	SHEET No.	TOTAL SHEETS
04	Son	1	30.5	79	97

REGISTERED CIVIL ENGINEER — DATE 2-8-16

6-27-16
PLANS APPROVAL DATE

REGISTERED PROFESSIONAL ENGINEER — KIMBERLY MORI No. 83255 Exp. 3-31-2017 CIVIL — STATE OF CALIFORNIA

The State of California or its officers or agents shall not be responsible for the accuracy or completeness of scanned copies of this plan sheet.

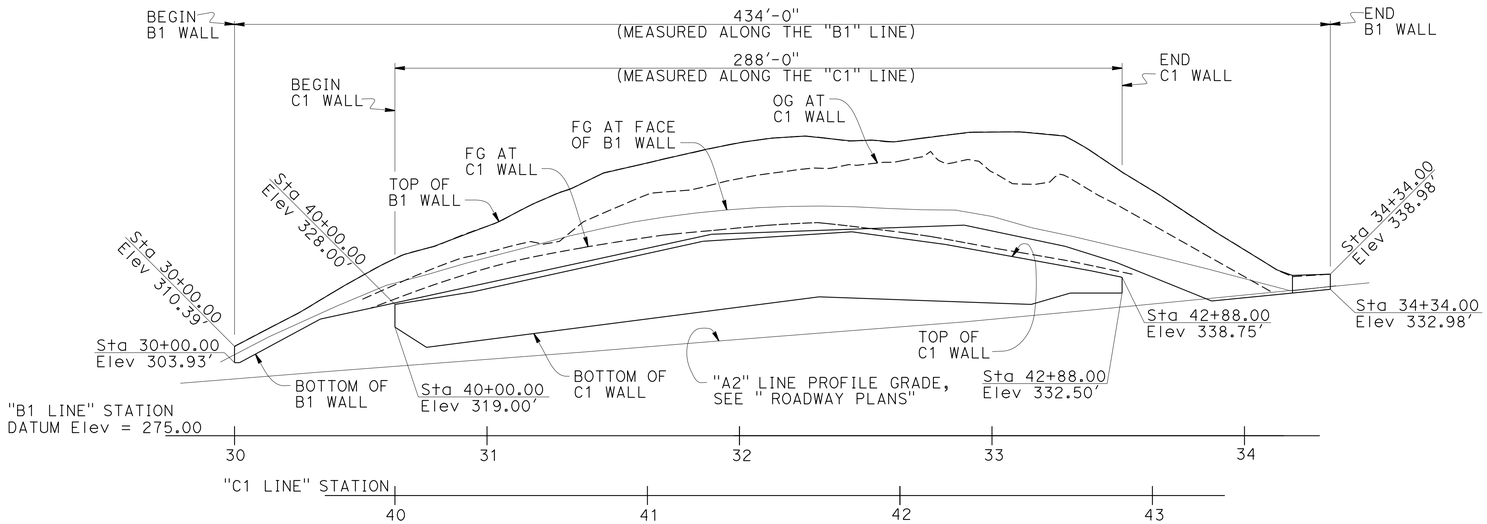

DEVELOPED ELEVATION

1" = 30'

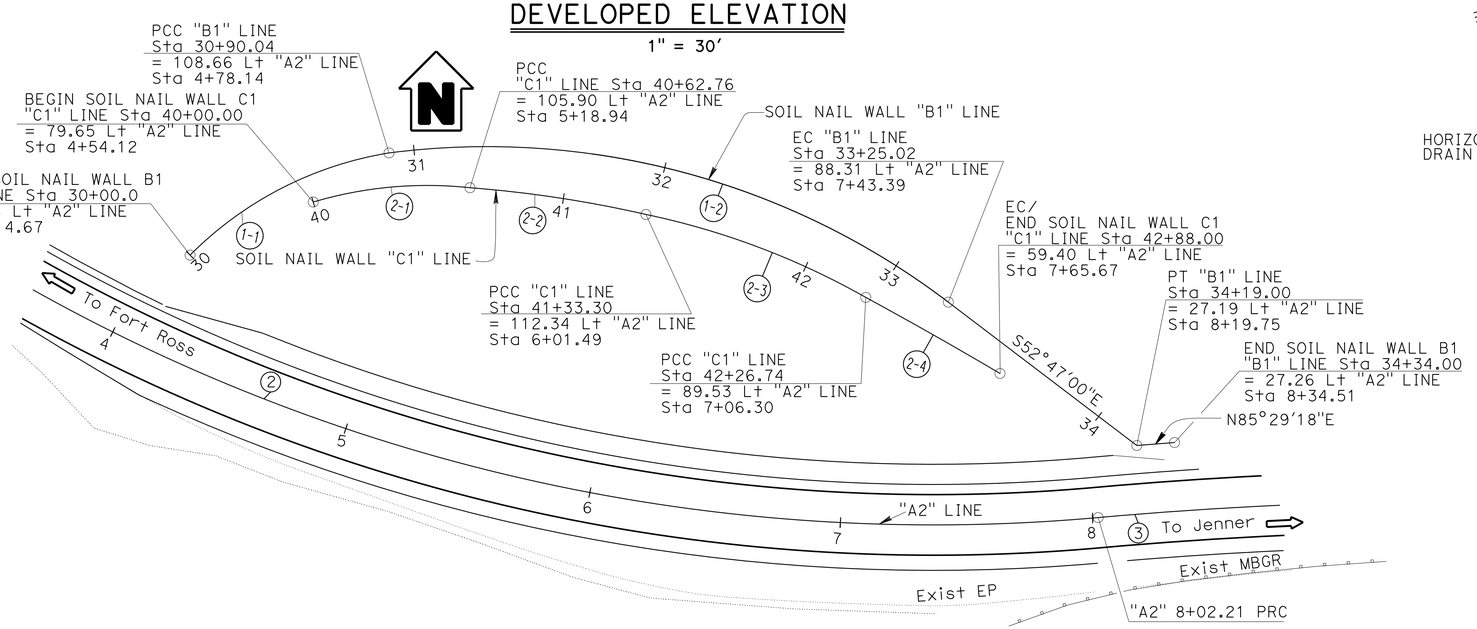

PLAN

1" = 30'

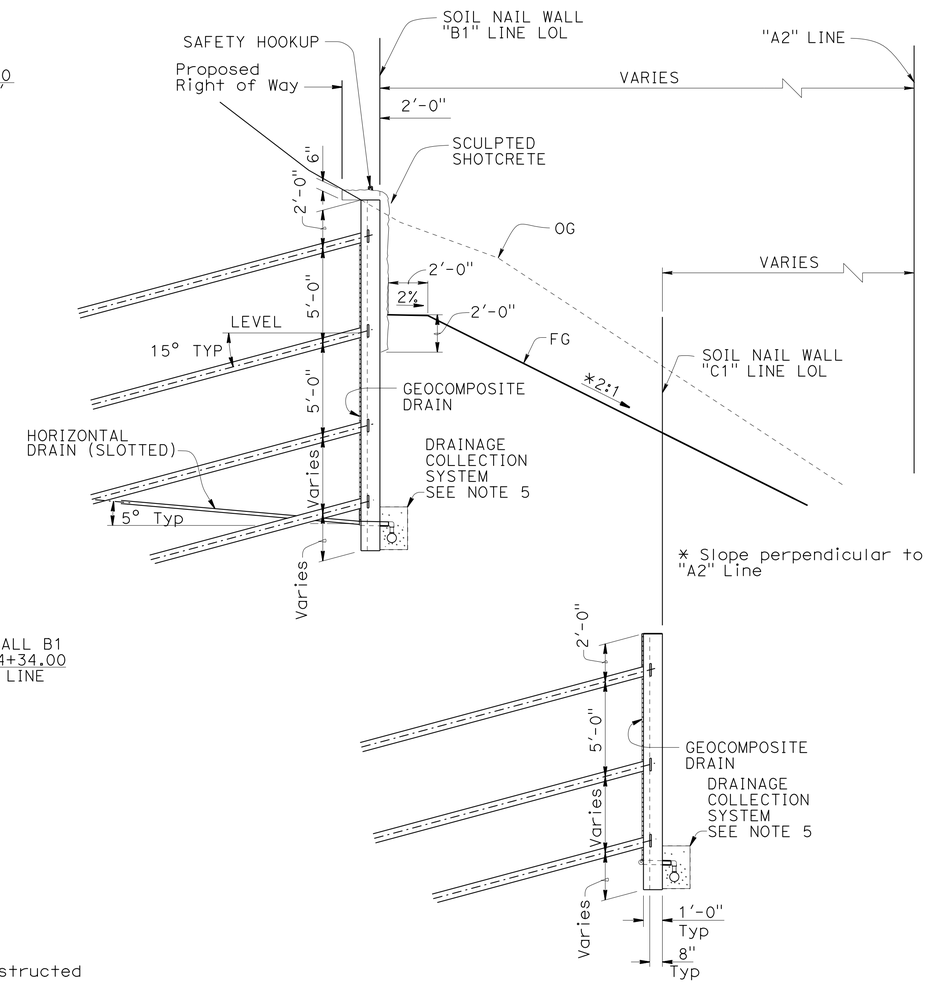

TYPICAL SECTION

¼" = 1'-0"

CURVE DATA

No. ⊕	R	Δ	T	L
2	730.13	42°44'57"	285.76	544.76
3	1658.92	11°31'20"	167.37	333.61
1-1	143.72	35°53'46"	46.55	90.04
1-2	301.91	44°35'36"	123.80	234.98
2-1	158.28	22°43'03"	31.80	62.76
2-2	474.66	08°30'53"	35.34	70.54
2-3	301.89	17°44'01"	47.10	93.44
2-4	1676.69	02°05'36"	30.59	61.26

NOTES:

1. "B1" Line retaining wall to be constructed prior to "C1" Line retaining wall
2. For Temporary railing (TYPE K) see "ROADWAY PLANS"
3. For Index to Plans, Standard Plans List and Quantities see "INDEX TO PLANS" sheet
4. For General Notes see "RETAINING WALL DETAILS No. 2" sheet
5. See "DRAINAGE PLAN" and "DRAINAGE DETAILS No. 1" and "DRAINAGE DETAILS No. 2" sheets

Richard Melko
DESIGN ENGINEER

	BY	CHECKED
DESIGN	P. Lutz	K. Mori
DETAILS	P. Lutz / R. Heider	K. Mori
QUANTITIES	P. Lutz	K. Mori

LOAD & RESISTANCE FACTOR DESIGN — LIVE LOADING: HL93 W/"LOW-BOY": PERMIT DESIGN VEHICLE

	BY	CHECKED
LAYOUT	P. Lutz	K. Mori
SPECIFICATIONS	M. Kopsa	PLANS AND SPECS COMPARED M. Kopsa

ORIGINAL SCALE IN INCHES FOR REDUCED PLANS 0 1 2 3

STATE OF CALIFORNIA
DEPARTMENT OF TRANSPORTATION

DIVISION OF ENGINEERING SERVICES
STRUCTURE DESIGN
DESIGN BRANCH 9

BRIDGE NO. 20E0091
POST MILE 30.5

SOIL NAIL WALL AT PM 30.5
GENERAL PLAN

UNIT: 3594
PROJECT NUMBER & PHASE: 04000212721
CONTRACT NO.: 04-3G0804

DISREGARD PRINTS BEARING EARLIER REVISION DATES

REVISION DATES 1-27-15 8-18-15 10-13-15 1-27-15

SHEET 1 OF 19

USERNAME => s128357 DATE PLOTTED => 19-SEP-2016 TIME PLOTTED => 13:35

STRUCTURES DESIGN GENERAL PLAN SHEET (ENGLISH) (REV.09-01-10)

FILE => 20e0091-a-gp.dgn

DIST	COUNTY	ROUTE	POST MILES TOTAL PROJECT	SHEET No.	TOTAL SHEETS
04	Son	1	30.5	80	97

REGISTERED CIVIL ENGINEER 2-8-16 DATE

6-27-16
PLANS APPROVAL DATE

REGISTERED PROFESSIONAL ENGINEER
KIMBERLY MORI
No. 83255
Exp. 3-31-2017
CIVIL
STATE OF CALIFORNIA

The State of California or its officers or agents shall not be responsible for the accuracy or completeness of scanned copies of this plan sheet.

SOIL NAIL WALL "B1" LINE

QUANTITIES

STRUCTURE EXCAVATION (SOIL NAIL WALL)	1,120	CY
STRUCTURE BACKFILL (SOIL NAIL WALL)	140	CY
SOIL NAIL	14,358	LF
BAR REINFORCING STEEL (SOIL NAIL WALL)	40,600	LB
SCULPTED SHOTCRETE	9,760	SQFT
STRUCTURAL SHOTCRETE	470	CY
PREPARE AND STAIN SHOTCRETE	11,000	SQFT
GEOCOMPOSITE DRAIN	2,150	SQFT
FURNISH AND INSTALL 2" SLOTTED DRAIN PIPE (HORIZONTAL DRAIN)	645	LF
DRILL HOLE (HORIZONTAL DRAIN)	630	LF
DRAINAGE COLLECTION SYSTEM	LUMP	SUM
SAFETY HOOKUP (STAINLESS STEEL)	1,200	LB

SOIL NAIL WALL "C1" LINE

QUANTITIES

STRUCTURE EXCAVATION (SOIL NAIL WALL)	980	CY
STRUCTURE BACKFILL (SOIL NAIL WALL)	310	CY
SOIL NAIL	6,657	LF
BAR REINFORCING STEEL (SOIL NAIL WALL)	21,000	LB
STRUCTURAL SHOTCRETE	230	CY
GEOCOMPOSITE DRAIN	1,140	SQFT
DRAINAGE COLLECTION SYSTEM	LUMP	SUM

STANDARD PLANS 2010

	A10A	ABBREVIATIONS (SHEET 1 OF 2)
RSP	A10B	ABBREVIATIONS (SHEET 2 OF 2)
	A10C	LINES AND SYMBOLS (SHEET 1 OF 3)
	A10D	LINES AND SYMBOLS (SHEET 2 OF 3)
	A10E	LINES AND SYMBOLS (SHEET 3 OF 3)
RSP	A10F	LEGEND - SOIL (SHEET 1 OF 2)
RSP	A10G	LEGEND - SOIL (SHEET 2 OF 2)
	A10H	LEGEND - ROCK

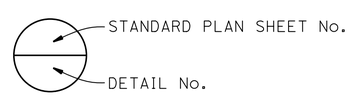

INDEX TO PLANS

SHEET No.	TITLE
1	GENERAL PLAN
2	INDEX TO PLANS
3	STRUCTURE PLAN No. 1
4	STRUCTURE PLAN No. 2
5	STRUCTURE PLAN No. 3
6	STRUCTURE PLAN No. 4
7	SOIL NAIL SCHEDULE
8	FOUNDATION PLAN
9	RETAINING WALL DETAILS No. 1
10	RETAINING WALL DETAILS No. 2
11	RETAINING WALL DETAILS No. 3
12	SCULPTED SHOTCRETE LAYOUT No. 1
13	SCULPTED SHOTCRETE LAYOUT No. 2
14	STRATA DETAIL
15	SCULPTED SHOTCRETE DETAILS
16	DRAINAGE PLAN
17	DRAINAGE DETAILS No. 1
18	DRAINAGE DETAILS No. 2
19	LOG OF TEST BORINGS 1 OF 1

	BY	CHECKED
DESIGN	P. Lutz	K. Mori
DETAILS	R. Heider	K. Mori
QUANTITIES	P. Lutz	K. Mori

STATE OF CALIFORNIA
DEPARTMENT OF TRANSPORTATION

DIVISION OF ENGINEERING SERVICES
STRUCTURE DESIGN
DESIGN BRANCH 9

BRIDGE NO. 20E0091
POST MILE 30.5

SOIL NAIL WALL AT PM 30.5
INDEX TO PLANS

STRUCTURES DESIGN DETAIL SHEET (ENGLISH) (REV. 09-01-10)

ORIGINAL SCALE IN INCHES FOR REDUCED PLANS 0 1 2 3

UNIT: 3594
PROJECT NUMBER & PHASE: 04000212721
CONTRACT NO.: 04-3G0804

DISREGARD PRINTS BEARING EARLIER REVISION DATES

REVISION DATES: 5-5-15 12-23-15 2-5-16

SHEET 2 OF 19

FILE => 20e0091-a-itp.dgn

USERNAME => s128357 DATE PLOTTED => 19-SEP-2016 TIME PLOTTED => 13:35

DIST	COUNTY	ROUTE	POST MILES TOTAL PROJECT	SHEET No.	TOTAL SHEETS
04	Son	1	30.5	81	97

REGISTERED CIVIL ENGINEER 2-8-16 DATE

6-27-16
PLANS APPROVAL DATE

REGISTERED PROFESSIONAL ENGINEER KIMBERLY MORI No. 83255 Exp. 3-31-2017 CIVIL STATE OF CALIFORNIA

The State of California or its officers or agents shall not be responsible for the accuracy or completeness of scanned copies of this plan sheet.

LEGEND:

- ○ LOCATION OF SOIL NAIL
- ⊕ LOCATION OF PROOF TEST SOIL NAIL

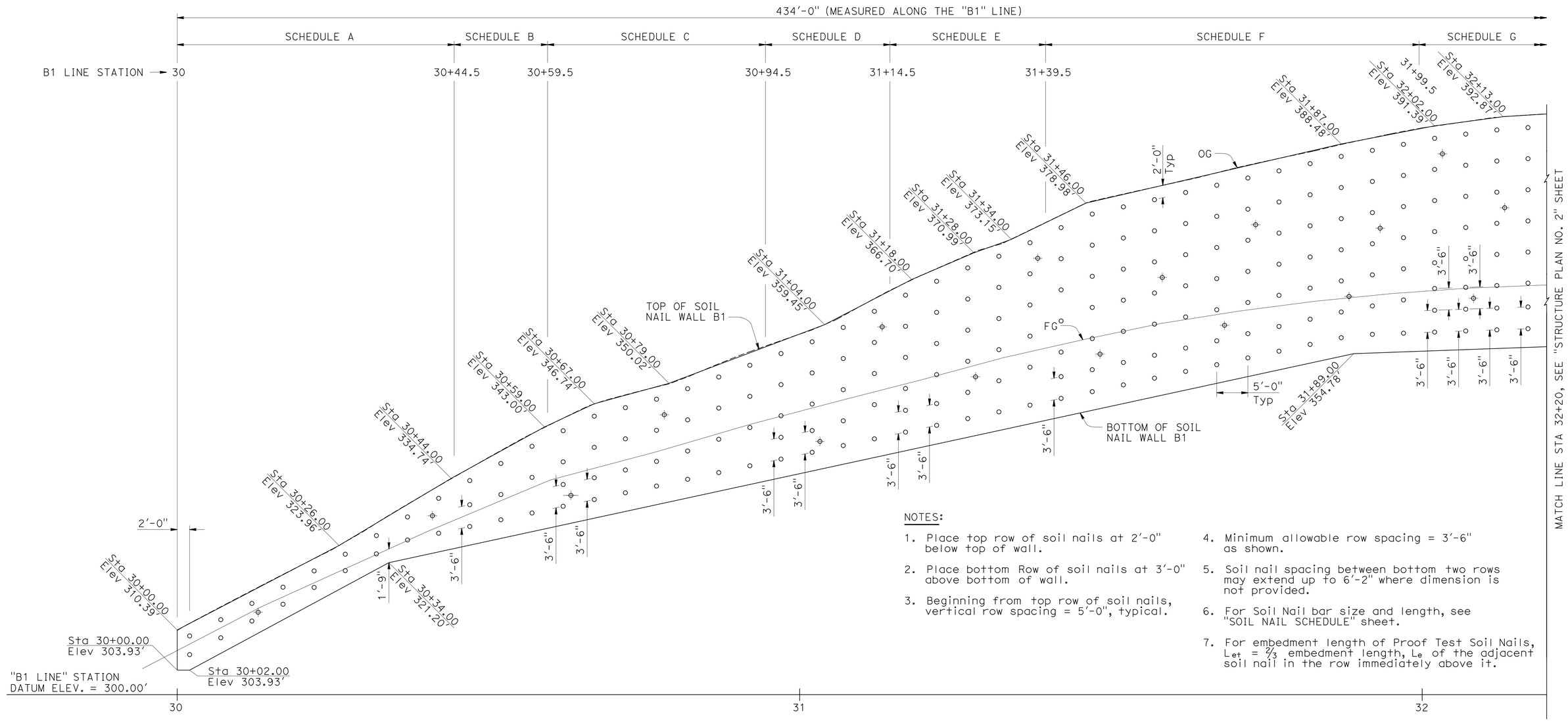

NOTES:

1. Place top row of soil nails at 2'-0" below top of wall.
2. Place bottom Row of soil nails at 3'-0" above bottom of wall.
3. Beginning from top row of soil nails, vertical row spacing = 5'-0", typical.
4. Minimum allowable row spacing = 3'-6" as shown.
5. Soil nail spacing between bottom two rows may extend up to 6'-2" where dimension is not provided.
6. For Soil Nail bar size and length, see "SOIL NAIL SCHEDULE" sheet.
7. For embedment length of Proof Test Soil Nails, $L_{et} = \frac{2}{3}$ embedment length, L_e of the adjacent soil nail in the row immediately above it.

DEVELOPED ELEVATION

1/8" = 1'-0"

	BY	CHECKED
DESIGN	P. Lutz	K. Mori
DETAILS	R. Heider	K. Mori
QUANTITIES	P. Lutz	K. Mori

STATE OF CALIFORNIA
DEPARTMENT OF TRANSPORTATION

DIVISION OF ENGINEERING SERVICES
STRUCTURE DESIGN
DESIGN BRANCH 9

BRIDGE NO. 20E0091
POST MILE 30.5

SOIL NAIL WALL AT PM 30.5
STRUCTURE PLAN No. 1

STRUCTURES DESIGN DETAIL SHEET (ENGLISH) (REV. 09-01-10)

ORIGINAL SCALE IN INCHES FOR REDUCED PLANS 0 1 2 3

UNIT: 3594
PROJECT NUMBER & PHASE: 04000212721
CONTRACT NO.: 04-3G0804

DISREGARD PRINTS BEARING EARLIER REVISION DATES

REVISION DATES: 5-9-14 1-27-16

SHEET 3 OF 19

FILE => 20e0091-c-sp01.dgn

USERNAME => s128357 DATE PLOTTED => 19-SEP-2016 TIME PLOTTED => 13:35

DIST	COUNTY	ROUTE	POST MILES TOTAL PROJECT	SHEET No.	TOTAL SHEETS
04	Son	1	30.5	82	97

REGISTERED CIVIL ENGINEER 2-8-16 DATE

6-27-16
PLANS APPROVAL DATE

REGISTERED PROFESSIONAL ENGINEER KIMBERLY MORI No. 83255 Exp. 3-31-17 CIVIL STATE OF CALIFORNIA

The State of California or its officers or agents shall not be responsible for the accuracy or completeness of scanned copies of this plan sheet.

LEGEND:

- ○ LOCATION OF SOIL NAIL
- ⊕ LOCATION OF PROOF TEST SOIL NAIL

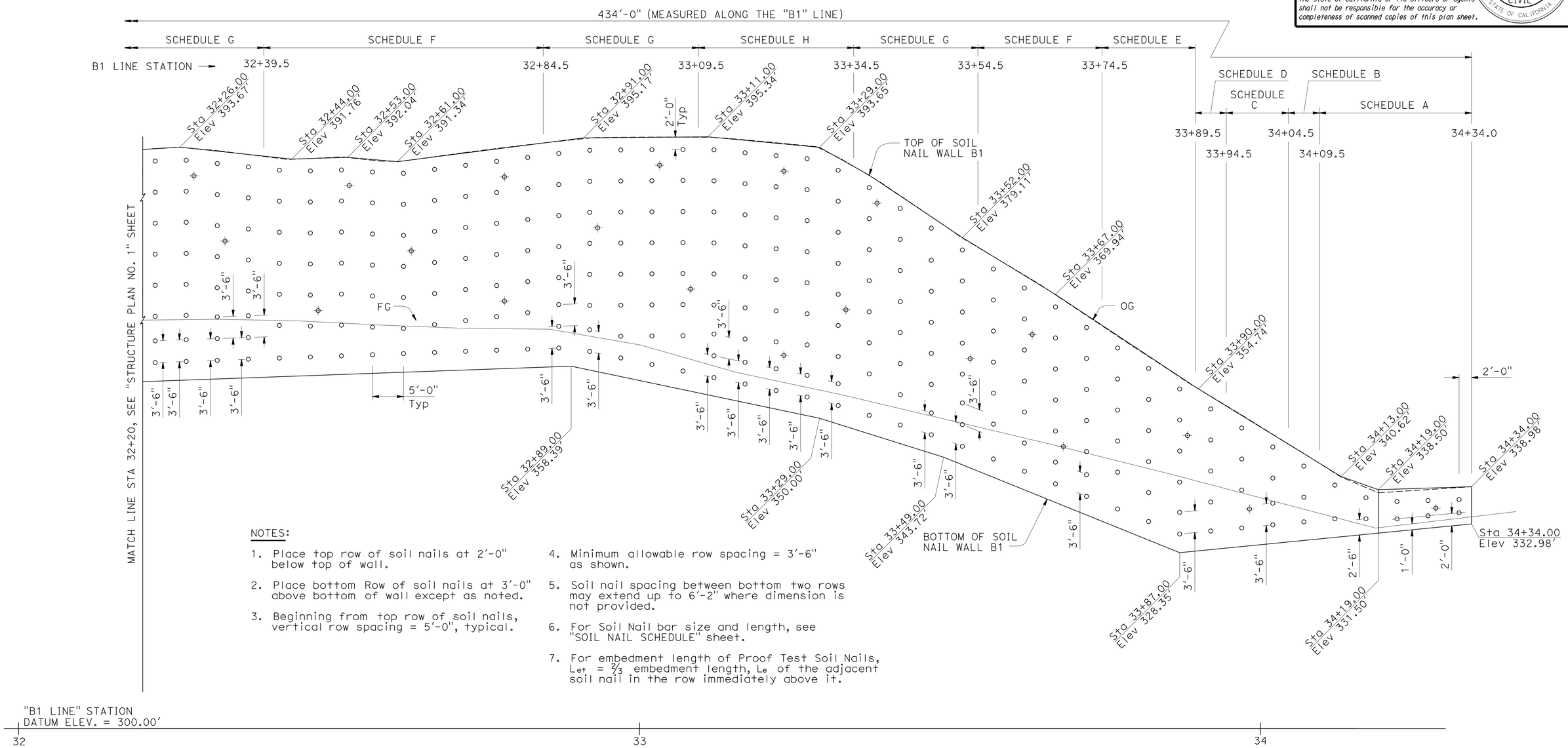

NOTES:

1. Place top row of soil nails at 2'-0" below top of wall.
2. Place bottom Row of soil nails at 3'-0" above bottom of wall except as noted.
3. Beginning from top row of soil nails, vertical row spacing = 5'-0", typical.
4. Minimum allowable row spacing = 3'-6" as shown.
5. Soil nail spacing between bottom two rows may extend up to 6'-2" where dimension is not provided.
6. For Soil Nail bar size and length, see "SOIL NAIL SCHEDULE" sheet.
7. For embedment length of Proof Test Soil Nails, L_{et} = 2/3 embedment length, L_e of the adjacent soil nail in the row immediately above it.

DEVELOPED ELEVATION

1/8" = 1'-0"

	BY	CHECKED
DESIGN	P. Lutz	K. Mori
DETAILS	R. Heider	K. Mori
QUANTITIES	P. Lutz	K. Mori

STATE OF CALIFORNIA
DEPARTMENT OF TRANSPORTATION

DIVISION OF ENGINEERING SERVICES
STRUCTURE DESIGN
DESIGN BRANCH 9

BRIDGE NO. 20E0091
POST MILE 30.5

SOIL NAIL WALL AT PM 30.5
STRUCTURE PLAN No. 2

STRUCTURES DESIGN DETAIL SHEET (ENGLISH) (REV. 09-01-10)

ORIGINAL SCALE IN INCHES FOR REDUCED PLANS 0 1 2 3

UNIT: 3594
PROJECT NUMBER & PHASE: 04000212721
CONTRACT NO.: 04-3G0804

DISREGARD PRINTS BEARING EARLIER REVISION DATES

REVISION DATES: 5-9-14 1-27-16

SHEET 4 OF 19

FILE => 20e0091-c-sp02.dgn

USERNAME => s128357 DATE PLOTTED => 19-SEP-2016 TIME PLOTTED => 13:35

DIST	COUNTY	ROUTE	POST MILES TOTAL PROJECT	SHEET No.	TOTAL SHEETS
04	Son	1	30.5	83	97

REGISTERED CIVIL ENGINEER — DATE 2-8-16

6-27-16
PLANS APPROVAL DATE

REGISTERED PROFESSIONAL ENGINEER — KIMBERLY MORI — No. 83255 — Exp. 3-31-2017 — CIVIL — STATE OF CALIFORNIA

The State of California or its officers or agents shall not be responsible for the accuracy or completeness of scanned copies of this plan sheet.

LEGEND:

- ○ LOCATION OF SOIL NAIL
- ⊕ LOCATION OF PROOF TEST SOIL NAIL

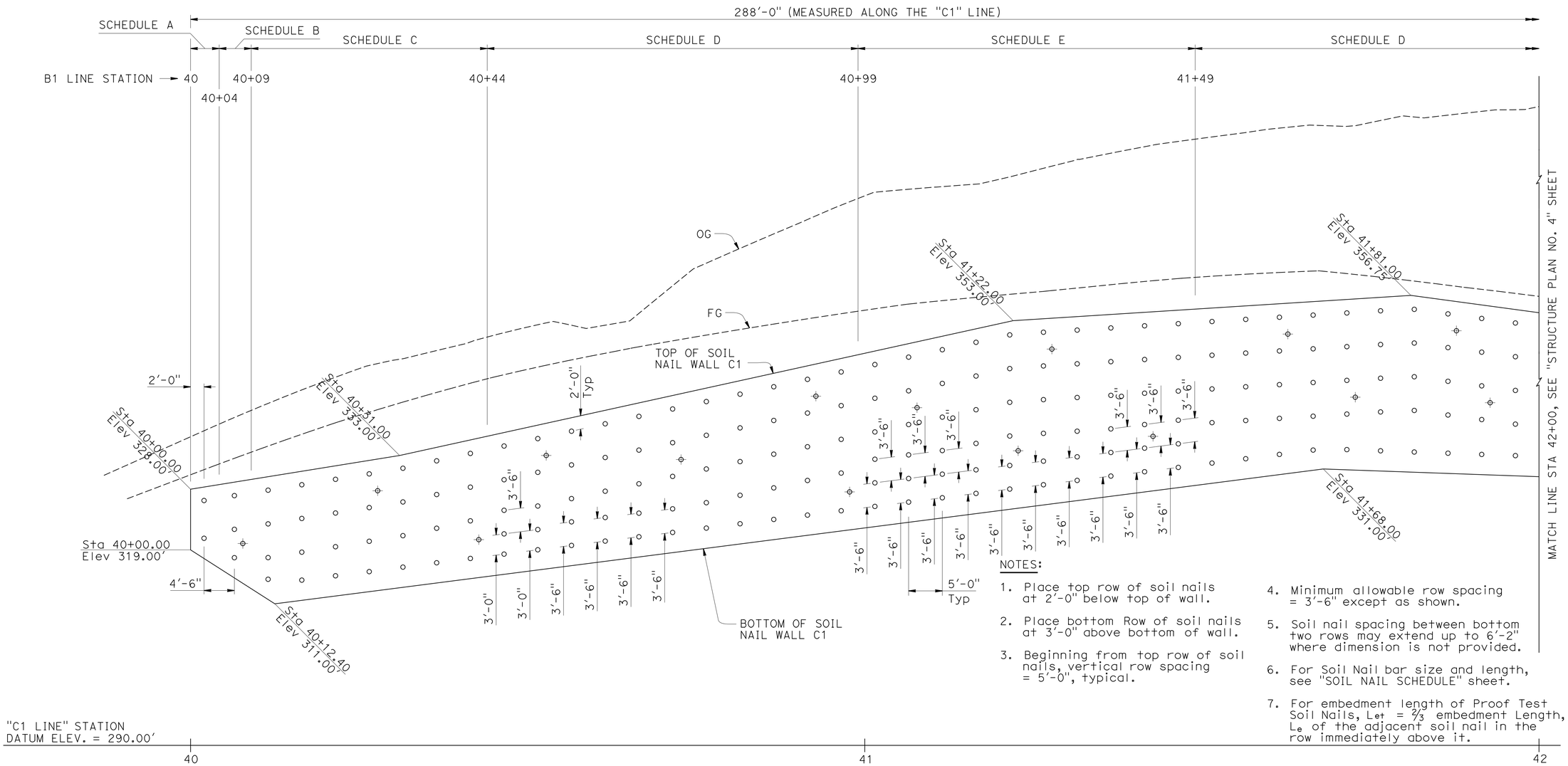

NOTES:

1. Place top row of soil nails at 2'-0" below top of wall.
2. Place bottom Row of soil nails at 3'-0" above bottom of wall.
3. Beginning from top row of soil nails, vertical row spacing = 5'-0", typical.
4. Minimum allowable row spacing = 3'-6" except as shown.
5. Soil nail spacing between bottom two rows may extend up to 6'-2" where dimension is not provided.
6. For Soil Nail bar size and length, see "SOIL NAIL SCHEDULE" sheet.
7. For embedment length of Proof Test Soil Nails, L_{et} = ⅔ embedment Length, L_e of the adjacent soil nail in the row immediately above it.

DEVELOPED ELEVATION

1/8" = 1'-0"

	BY	CHECKED
DESIGN	P. Lutz	K. Mori
DETAILS	R. Heider	K. Mori
QUANTITIES	P. Lutz	K. Mori

STATE OF CALIFORNIA
DEPARTMENT OF TRANSPORTATION

DIVISION OF ENGINEERING SERVICES
STRUCTURE DESIGN
DESIGN BRANCH 9

BRIDGE NO. 20E0091
POST MILE 30.5

SOIL NAIL WALL AT PM 30.5
STRUCTURE PLAN No. 3

STRUCTURES DESIGN DETAIL SHEET (ENGLISH) (REV. 09-01-10)

ORIGINAL SCALE IN INCHES FOR REDUCED PLANS 0 1 2 3

UNIT: 3594
PROJECT NUMBER & PHASE: 04000212721
CONTRACT NO.: 04-3G0804

DISREGARD PRINTS BEARING EARLIER REVISION DATES

REVISION DATES: 5-9-14 | 5-21-15

SHEET 5 OF 19

FILE => 20e0091-c-sp03.dgn

USERNAME => s128357 DATE PLOTTED => 19-SEP-2016 TIME PLOTTED => 13:35

DIST	COUNTY	ROUTE	POST MILES TOTAL PROJECT	SHEET No.	TOTAL SHEETS
04	Son	1	30.5	84	97

REGISTERED CIVIL ENGINEER — DATE 2-8-16

6-27-16
PLANS APPROVAL DATE

REGISTERED PROFESSIONAL ENGINEER — KIMBERLY MORI — No. 83255 — Exp. 3-31-2017 — CIVIL — STATE OF CALIFORNIA

The State of California or its officers or agents shall not be responsible for the accuracy or completeness of scanned copies of this plan sheet.

LEGEND:

- ○ LOCATION OF SOIL NAIL
- ⊕ LOCATION OF PROOF TEST SOIL NAIL

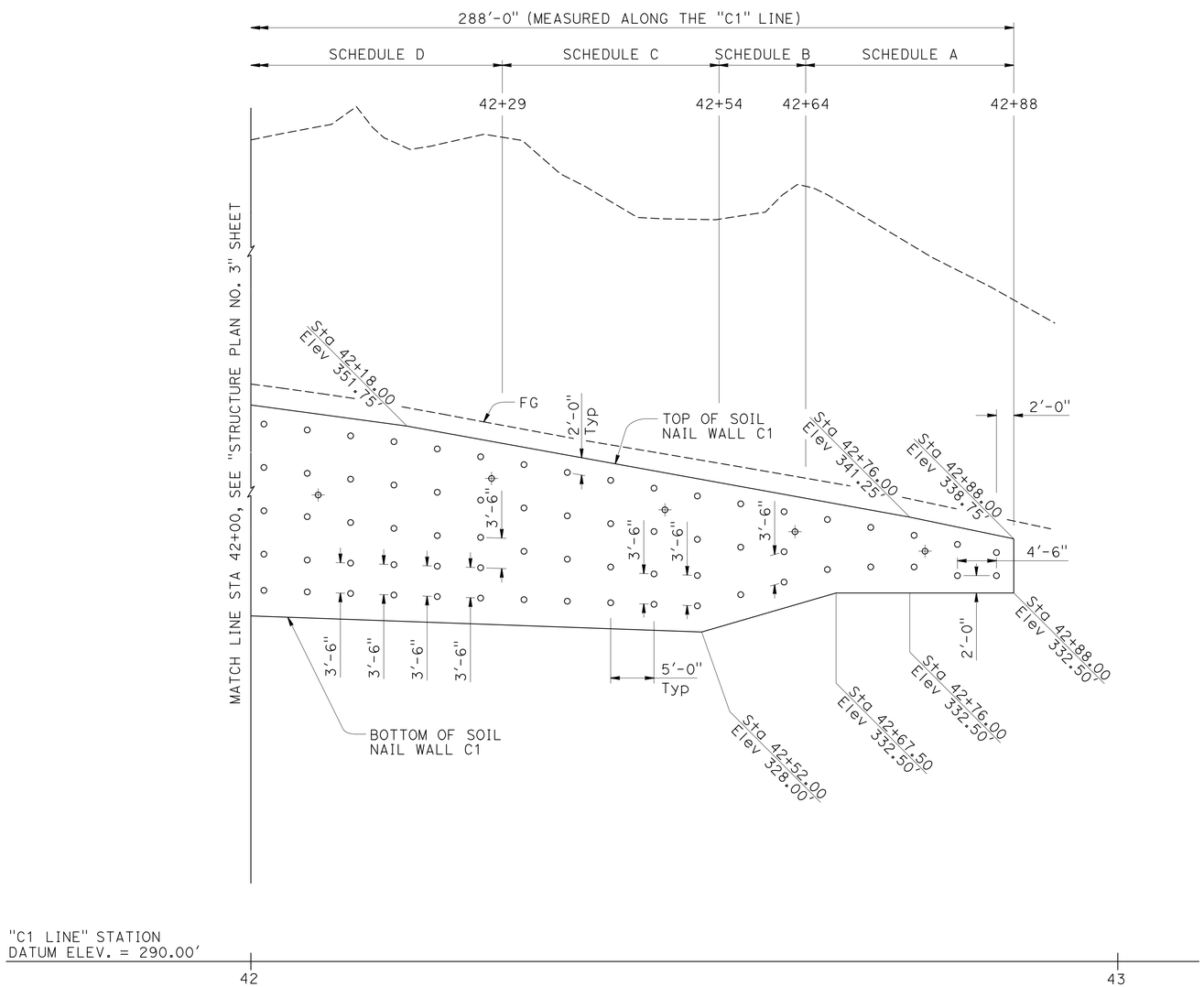

DEVELOPED ELEVATION

1/8" = 1'-0"

NOTES:

1. Place top row of soil nails at 2'-0" below top of wall.
2. Place bottom Row of soil nails at 3'-0" above bottom of wall, except as shown.
3. Beginning from top row of soil nails, vertical row spacing = 5'-0", typical.
4. Minimum allowable row spacing = 3'-6" as shown.
5. Soil nail spacing between bottom two rows may extend up to 6'-2" where dimension is not provided.
6. For Soil Nail bar size and length, see "SOIL NAIL SCHEDULE" sheet.
7. For embedment length of Proof Test Soil Nails, $L_{et} = \frac{2}{3}$ embedment length L_e of the adjacent soil nail in the row immediately above it.

	BY	CHECKED
DESIGN	P. Lutz	K. Mori
DETAILS	R. Heider	K. Mori
QUANTITIES	P. Lutz	K. Mori

STATE OF CALIFORNIA
DEPARTMENT OF TRANSPORTATION

DIVISION OF ENGINEERING SERVICES
STRUCTURE DESIGN
DESIGN BRANCH 9

BRIDGE NO. 20E0091
POST MILE 30.5

SOIL NAIL WALL AT PM 30.5
STRUCTURE PLAN No. 4

STRUCTURES DESIGN DETAIL SHEET (ENGLISH) (REV. 09-01-10)

ORIGINAL SCALE IN INCHES FOR REDUCED PLANS 0 1 2 3

UNIT: 3594
PROJECT NUMBER & PHASE: 04000212721
CONTRACT NO.: 04-3G0804

DISREGARD PRINTS BEARING EARLIER REVISION DATES

REVISION DATES: 5-9-14 5-21-15

SHEET 6 OF 19

FILE => 20e0091-c-sp04.dgn

USERNAME => s128357 DATE PLOTTED => 19-SEP-2016 TIME PLOTTED => 13:35

DIST	COUNTY	ROUTE	POST MILES TOTAL PROJECT	SHEET No.	TOTAL SHEETS
04	Son	1	30.5	85	97

REGISTERED CIVIL ENGINEER 2-8-16 DATE

6-27-16
PLANS APPROVAL DATE

REGISTERED PROFESSIONAL ENGINEER
KIMBERLY MORI
No. 83255
Exp. 3-31-2017
CIVIL
STATE OF CALIFORNIA

The State of California or its officers or agents shall not be responsible for the accuracy or completeness of scanned copies of this plan sheet.

NOTES:

1. Place top row of soil nails at 2'-0" below top of wall.
2. Place bottom Row of soil nails at 3'-0" above bottom of wall.
3. Beginning from top row of soil nails, vertical row spacing = 5'-0", typical.
4. Minimum allowable row spacing = 3'-6" as shown on "STRUCTURE PLAN" sheets.
5. Soil nail spacing between bottom two rows may extend up to 6'-2" where dimension is not provided.

B1 LINE SOIL NAIL SCHEDULE

NAIL SCHEDULE A	BAR SIZE, #7 (0.875")	
NO. OF SOIL NAIL ROWS	2	
ROW NO. (FROM TOP TO BOTTOM)	1	2
EMBEDMENT DEPTH LE (FT)	12	12

NAIL SCHEDULE B	BAR SIZE, #7 (0.875")		
NO. OF SOIL NAIL ROWS	3		
ROW NO. (FROM TOP TO BOTTOM)	1	2	3
EMBEDMENT DEPTH LE (FT)	15	15	15

NAIL SCHEDULE C	BAR SIZE, #7 (0.875")			
NO. OF SOIL NAIL ROWS	4			
ROW NO. (FROM TOP TO BOTTOM)	1	2	3	4
EMBEDMENT DEPTH LE (FT)	20	20	15	15

NAIL SCHEDULE D	BAR SIZE, #8 (1.00")				
NO. OF SOIL NAIL ROWS	5				
ROW NO. (FROM TOP TO BOTTOM)	1	2	3	4	5
EMBEDMENT DEPTH LE (FT)	25	25	20	20	15

NAIL SCHEDULE E	BAR SIZE, #8 (1.00")					
NO. OF SOIL NAIL ROWS	6					
ROW NO. (FROM TOP TO BOTTOM)	1	2	3	4	5	6
EMBEDMENT DEPTH LE (FT)	30	30	25	25	20	20

NAIL SCHEDULE F	BAR SIZE, #8 (1.00")						
NO. OF SOIL NAIL ROWS	7						
ROW NO. (FROM TOP TO BOTTOM)	1	2	3	4	5	6	7
EMBEDMENT DEPTH LE (FT)	35	35	25	25	25	20	20

NAIL SCHEDULE G	BAR SIZE,#8 (1.00")							
NO. OF SOIL NAIL ROWS	8							
ROW NO. (FROM TOP TO BOTTOM)	1	2	3	4	5	6	7	8
EMBEDMENT DEPTH LE (FT)	35	35	30	30	25	25	20	20

NAIL SCHEDULE H	BAR SIZE, #8 (1.00")								
NO. OF SOIL NAIL ROWS	9								
ROW NO. (FROM TOP TO BOTTOM)	1	2	3	4	5	6	7	8	9
EMBEDMENT DEPTH LE (FT)	55	55	45	45	45	30	30	25	20

C1 LINE SOIL NAIL SCHEDULE

NAIL SCHEDULE A	BAR SIZE, #7 (0.875")	
NO. OF SOIL NAIL ROWS	2	
ROW NO. (FROM TOP TO BOTTOM)	1	2
EMBEDMENT DEPTH LE (FT)	12	12

NAIL SCHEDULE B	BAR SIZE, #7 (0.875")		
NO. OF SOIL NAIL ROWS	3		
ROW NO. (FROM TOP TO BOTTOM)	1	2	3
EMBEDMENT DEPTH LE (FT)	15	15	15

NAIL SCHEDULE C	BAR SIZE, #7 (0.875")			
NO. OF SOIL NAIL ROWS	4			
ROW NO. (FROM TOP TO BOTTOM)	1	2	3	4
EMBEDMENT DEPTH LE (FT)	25	20	15	15

NAIL SCHEDULE D	BAR SIZE, #7 (1.00")				
NO. OF SOIL NAIL ROWS	5				
ROW NO. (FROM TOP TO BOTTOM)	1	2	3	4	5
EMBEDMENT DEPTH LE (FT)	30	25	25	20	15

NAIL SCHEDULE E	BAR SIZE, #8 (1.00")					
NO. OF SOIL NAIL ROWS	6					
ROW NO. (FROM TOP TO BOTTOM)	1	2	3	4	5	6
EMBEDMENT DEPTH LE (FT)	35	35	30	30	20	20

DESIGN	BY P. Lutz	CHECKED K. Mori	
DETAILS	BY R. Heider	CHECKED K. Mori	
QUANTITIES	BY P. Lutz	CHECKED K. Mori	

STATE OF CALIFORNIA
DEPARTMENT OF TRANSPORTATION

DIVISION OF ENGINEERING SERVICES
STRUCTURE DESIGN
DESIGN BRANCH 9

BRIDGE NO. 20E0091
POST MILE 30.5

SOIL NAIL WALL AT PM 30.5
SOIL NAIL SCHEDULE

STRUCTURES DESIGN DETAIL SHEET (ENGLISH) (REV. 09-01-10)

ORIGINAL SCALE IN INCHES FOR REDUCED PLANS 0 1 2 3

UNIT: 3594
PROJECT NUMBER & PHASE: 04000212721
CONTRACT NO.: 04-3G0804

DISREGARD PRINTS BEARING EARLIER REVISION DATES

REVISION DATES: 5-9-14 2-8-16

SHEET 7 OF 19

FILE => 20e0091-d-snschd.dgn

USERNAME => s128357 DATE PLOTTED => 19-SEP-2016 TIME PLOTTED => 13:35

DIST	COUNTY	ROUTE	POST MILES TOTAL PROJECT	SHEET No.	TOTAL SHEETS
04	Son	1	30.5	86	97

REGISTERED CIVIL ENGINEER 2-8-16 DATE

6-27-16
PLANS APPROVAL DATE

REGISTERED PROFESSIONAL ENGINEER KIMBERLY MORI No. 83255 Exp. 3-31-2017 CIVIL STATE OF CALIFORNIA

The State of California or its officers or agents shall not be responsible for the accuracy or completeness of electronic copies of this plan sheet.

CURVE DATA

No.	R	Δ	T	L
2	730.13	42°44′57″	285.76	544.76
3	1658.92	11°31′20″	167.37	333.61
1-1	143.72	35°53′46″	46.55	90.04
1-2	301.91	44°35′36″	123.80	234.98
2-1	158.28	22°43′03″	31.80	62.76
2-2	474.66	08°30′53″	35.34	70.54
2-3	301.89	17°44′01″	47.10	93.44
2-4	1676.69	02°05′36″	30.59	61.26

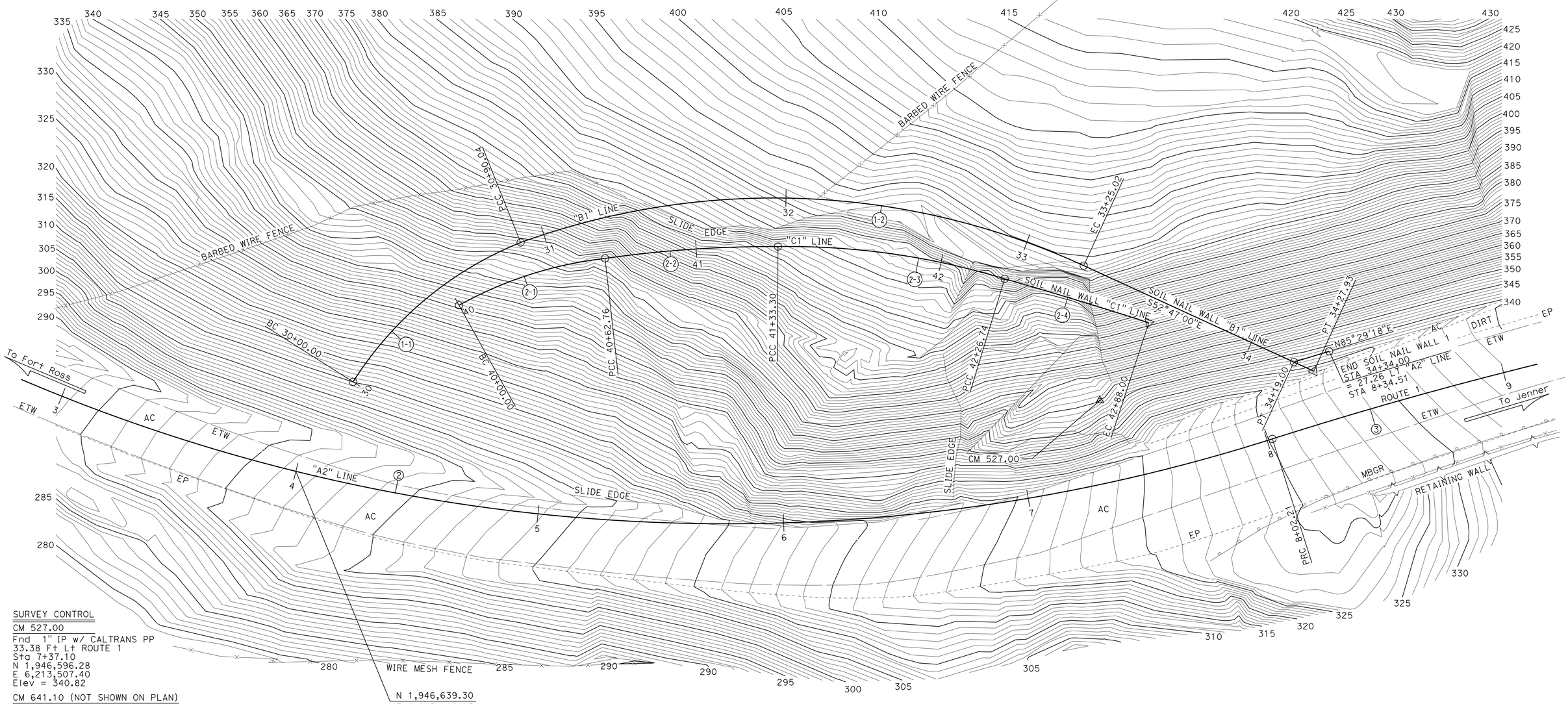

SURVEY CONTROL

CM 527.00
Fnd 1" IP w/ CALTRANS PP
33.38 Ft Lt ROUTE 1
Sta 7+37.10
N 1,946,596.28
E 6,213,507.40
Elev = 340.82

CM 641.10 (NOT SHOWN ON PLAN)
Fnd 1" IP w/ CALTRANS PP
134.57 Ft Rt ROUTE 1
Sta 4+63.79
N 1,946,488.16
E 6,213,191.24
Elev = 294.45

PRELIMINARY INVESTIGATION SECTION

SCALE	VERT.DATUM NAVD88	PHOTOGRAMMETRY AS OF: X			
1"=20′	HORZ.DATUM NAD83 (1991.35)	SURVEYED	BY DISTRICT	CHECKED	BY J. BORDEN 02/2015
ALIGNMENT TIES Dist TRAVERSE SHEET		DRAFTED	BY T. ZOLNIKOV 02/2015	CHECKED	BY S. SOU 02/2015

DESIGN	BY P. Lutz	CHECKED K. Mori
DETAILS	BY R. Heider	CHECKED K. Mori
QUANTITIES	BY P. Lutz	CHECKED K. Mori

STATE OF CALIFORNIA
DEPARTMENT OF TRANSPORTATION

DIVISION OF ENGINEERING SERVICES
STRUCTURE DESIGN
DESIGN BRANCH 9

BRIDGE NO. 20E0091
POST MILE 30.5

SOIL NAIL WALL AT PM 30.5
FOUNDATION PLAN

STRUCTURES FOUNDATION PLAN SHEET (ENGLISH) (REV. 09-01-10)

ORIGINAL SCALE IN INCHES FOR REDUCED PLANS 0 1 2 3

UNIT: 3646
PROJECT NUMBER & PHASE: 04000212721
CONTRACT NO.: EA:04-3G0804

SUBMITTAL DATE	REVISION DATES			SHEET	OF
03/05/15	4-8-15	5-5-15		8	19

FILE => 20e0091-e-fp101.dgn

USERNAME => s128357 DATE PLOTTED => 19-SEP-2016 TIME PLOTTED => 13:35

DIST	COUNTY	ROUTE	POST MILES TOTAL PROJECT	SHEET No.	TOTAL SHEETS
04	Son	1	30.5	87	97

REGISTERED CIVIL ENGINEER — DATE 2-8-16

6-27-16
PLANS APPROVAL DATE

REGISTERED PROFESSIONAL ENGINEER — KIMBERLY MORI No. 83255 Exp. 3-31-2017 CIVIL — STATE OF CALIFORNIA

The State of California or its officers or agents shall not be responsible for the accuracy or completeness of scanned copies of this plan sheet.

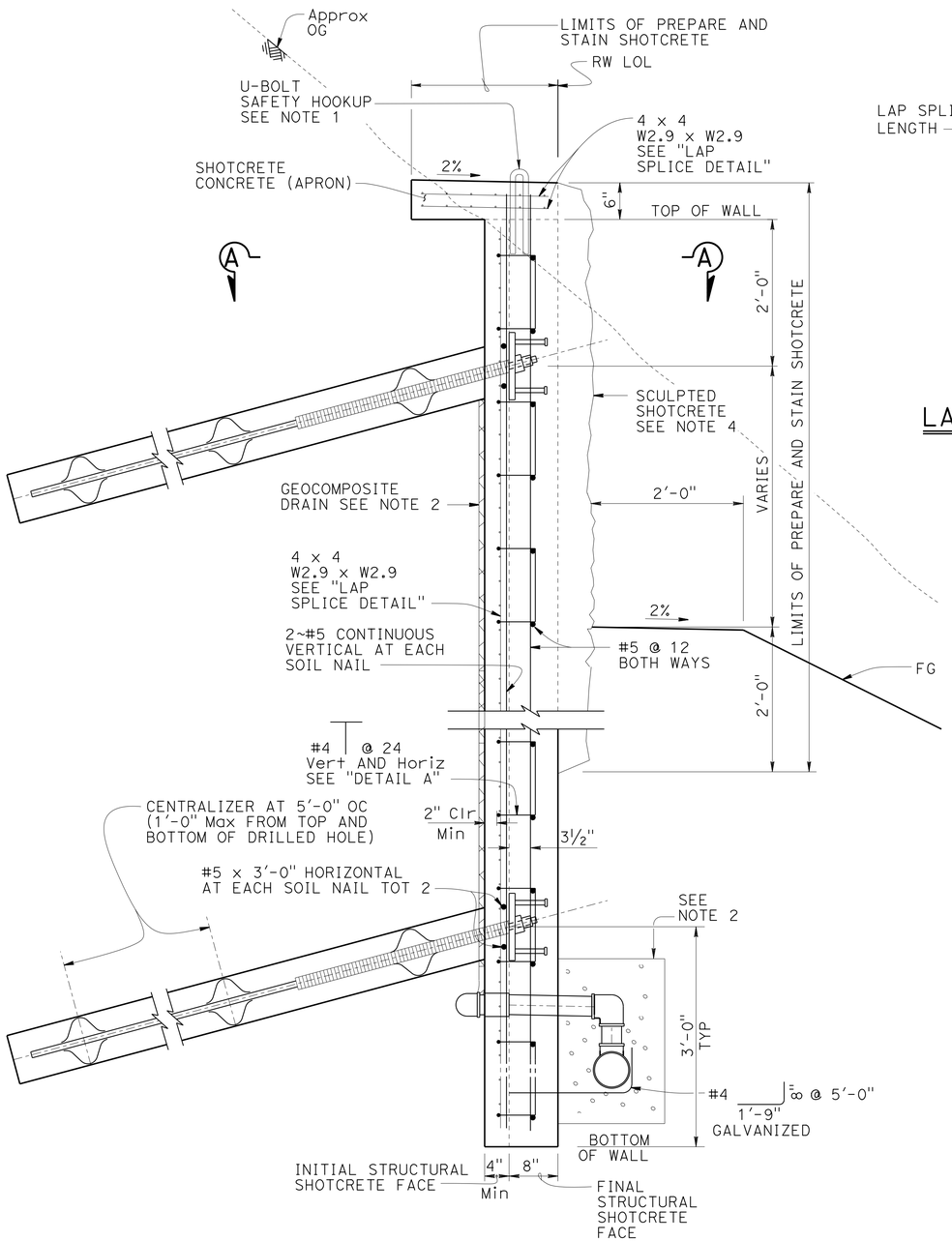

TYPICAL SECTION

1" = 1'-0"

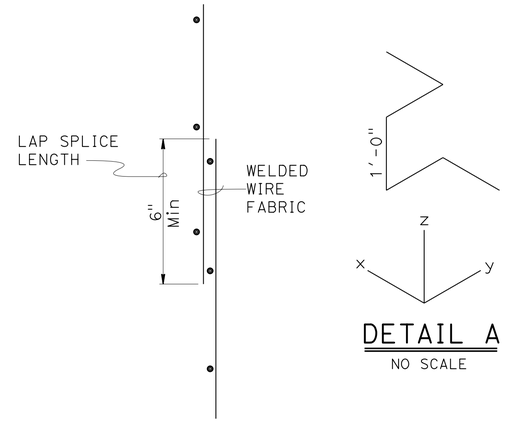

DETAIL A

NO SCALE

LAP SPLICE DETAIL

NO SCALE

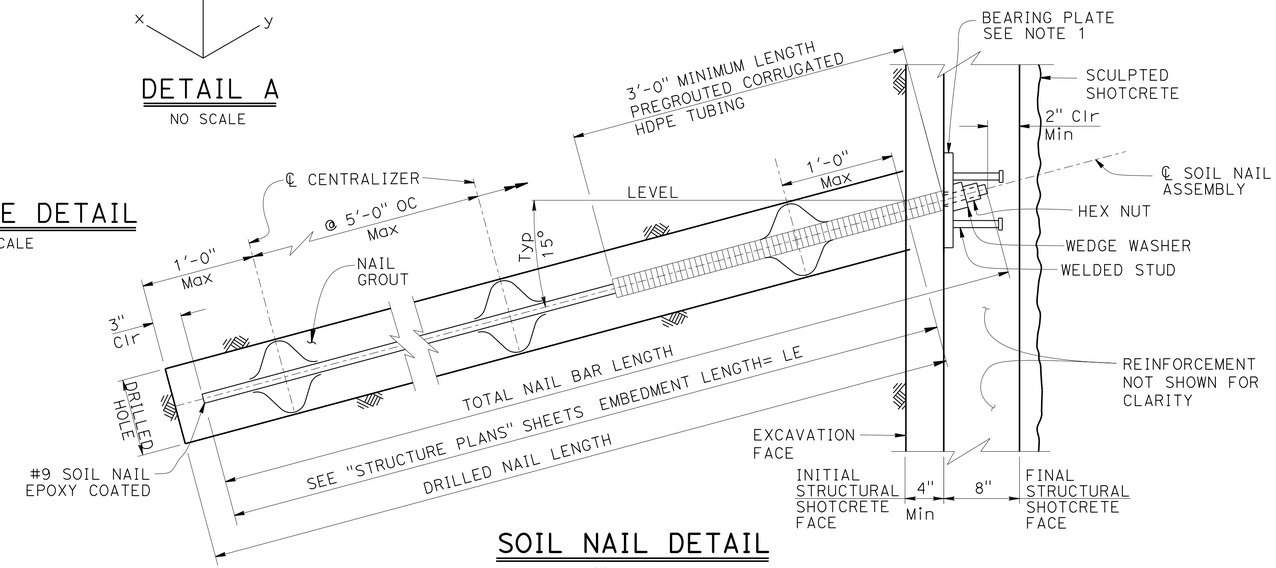

SOIL NAIL DETAIL

1½" = 1'-0"

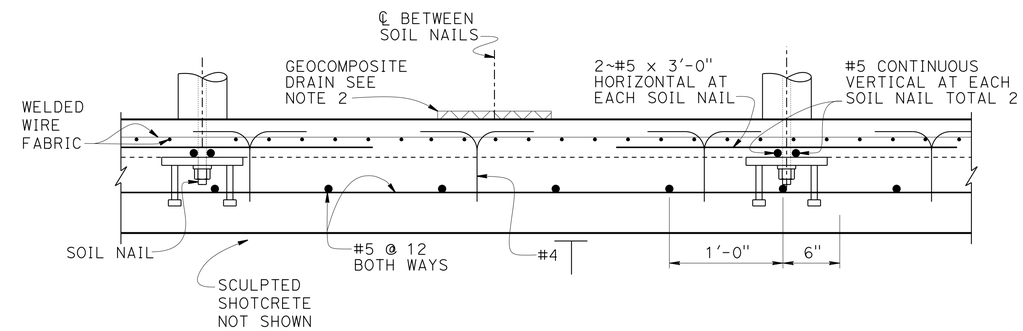

SECTION A-A

1½" = 1'-0"

NOTES:

1. See "RETAINING WALL DETAILS No. 3".
2. See "DRAINAGE PLAN" and "DRAINAGE DETAILS No. 1" sheets.
3. The limits of final structural shotcrete face will include the sculpted shotcrete including strata lines.
4. See "SCULPTED SHOTCRETE LAYOUT" sheets.
5. For Soil Nail spacing, see "STRUCTURE PLAN" Sheets.
6. Bottom of Wall to be placed against undisturbed material.

	BY	CHECKED
DESIGN	P. Lutz	K. Mori
DETAILS	R. Heider	K. Mori
QUANTITIES	P. Lutz	K. Mori

STATE OF CALIFORNIA DEPARTMENT OF TRANSPORTATION

DIVISION OF ENGINEERING SERVICES STRUCTURE DESIGN DESIGN BRANCH 9

BRIDGE NO. 20E0091 POST MILE 30.5

SOIL NAIL WALL AT PM 30.5
RETAINING WALL DETAILS No. 1

STRUCTURES DESIGN DETAIL SHEET (ENGLISH) (REV. 09-01-10)

ORIGINAL SCALE IN INCHES FOR REDUCED PLANS 0 1 2 3

UNIT: 3594
PROJECT NUMBER & PHASE: 04000212721 CONTRACT NO.: 04-3G0804

DISREGARD PRINTS BEARING EARLIER REVISION DATES

REVISION DATES 12-16-10 1-11-12 1-28-16 SHEET 9 OF 19

FILE => 20e0091-k-det01.dgn

USERNAME => s128357 DATE PLOTTED => 19-SEP-2016 TIME PLOTTED => 13:35

DIST	COUNTY	ROUTE	POST MILES TOTAL PROJECT	SHEET No.	TOTAL SHEETS
04	Son	1	30.5	88	97

REGISTERED CIVIL ENGINEER 2-8-16 DATE

6-27-16
PLANS APPROVAL DATE

REGISTERED PROFESSIONAL ENGINEER
KIMBERLY MORI
No. 83255
Exp. 3-31-2017
CIVIL
STATE OF CALIFORNIA

The State of California or its officers or agents shall not be responsible for the accuracy or completeness of scanned copies of this plan sheet.

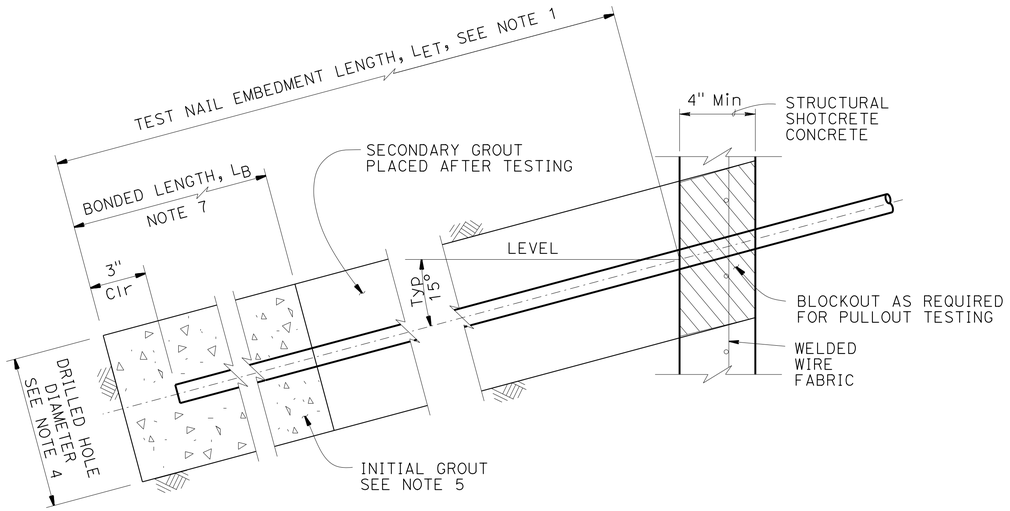

PROOF TEST SOIL NAIL DETAIL

3" = 1'-0"

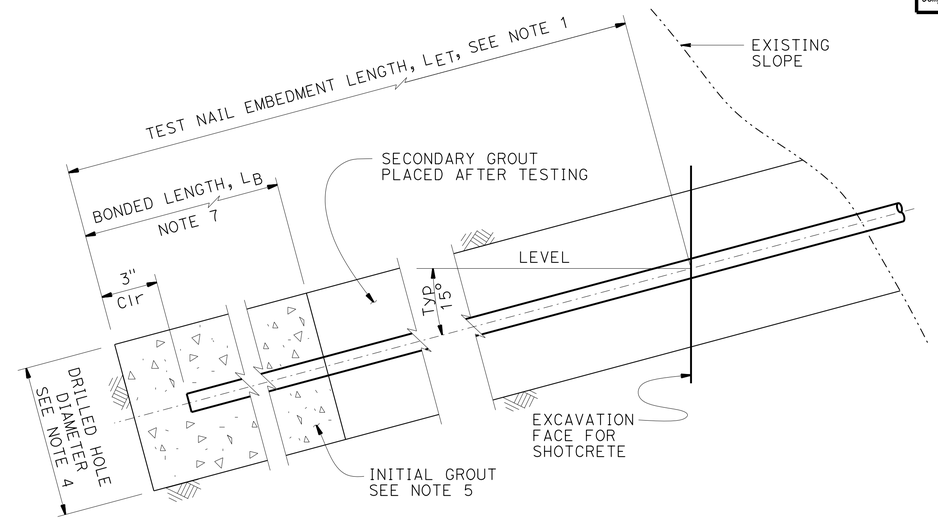

VERIFICATION TEST SOIL NAIL DETAIL

3" = 1'-0"

NOTES:

1. The test nail embedment length L_{ET}, shall be equal to 2/3 of the embedment length, Le, of adjacent production soil nail assemblies, but not less than 12'-0".
2. The total length of the proof test soil nail assembly equals to the embedment length plus the length required for jacking equipment.
3. For location of proof test nail see "STRUCTURE PLAN" sheets. Additional proof test nails will be installed and tested per special provisions.
4. Contractor to determine drilled hole diameter.
5. Finished grout surface to be normal to the bar.
6. The location of verification test nails to be determined in the field by the Engineer.
7. For bonded length L_B, see Standard Specifications.
8. Not all reinforcement shown, see "RETAINING WALL DETAILS No. 1" sheet

GENERAL NOTES

DESIGN:
Federal Highway Administration Publication No. FHWA-IF-03-017
Geotechnical Engineering Circular, GEC No. 7 SOIL NAIL WALLS

SOIL PARAMETERS - SOIL NAIL DESIGN
Friction Angle, Φ = 32°
Cohesion, c = 1000 psf
Unit Weight, γ = 125 pcf
Design Pullout Resistance between grout and drilled hole = 2.7 K/ft of bonded length
Punching Shear Capacity = 45 Kips

GROUT
f'c = 3,600 psi

SHOTCRETE
f'c = 3,600 psi
fy = 60 ksi

CONCRETE
f'c = 3,600 psi
fy = 60 ksi

SOIL NAILS
ASTM A615, Grade 75
fs = 75 ksi

SEISMIC LOADING
Soil profile: Class C
PGA: 0.68g K_n = 0.23

	BY	CHECKED
DESIGN	P. Lutz	K. Mori
DETAILS	R. Heider	K. Mori
QUANTITIES	P. Lutz	K. Mori

STATE OF CALIFORNIA
DEPARTMENT OF TRANSPORTATION

DIVISION OF ENGINEERING SERVICES
STRUCTURE DESIGN
DESIGN BRANCH 9

BRIDGE NO. 20E0091
POST MILE 30.5

SOIL NAIL WALL AT PM 30.5
RETAINING WALL DETAILS No. 2

STRUCTURES DESIGN DETAIL SHEET (ENGLISH) (REV. 09-01-10)

ORIGINAL SCALE IN INCHES FOR REDUCED PLANS 0 1 2 3

UNIT: 3594
PROJECT NUMBER & PHASE: 04000212721 CONTRACT NO.: 04-3G0804

DISREGARD PRINTS BEARING EARLIER REVISION DATES

REVISION DATES: 6-30-15 10-13-15

SHEET 10 OF 19

FILE => 20e0091-k-det02.dgn

USERNAME => s128357 DATE PLOTTED => 19-SEP-2016 TIME PLOTTED => 13:35

DIST	COUNTY	ROUTE	POST MILES TOTAL PROJECT	SHEET No.	TOTAL SHEETS
04	Son	1	30.5	89	97

REGISTERED CIVIL ENGINEER 2-8-16 DATE

6-27-16
PLANS APPROVAL DATE

REGISTERED PROFESSIONAL ENGINEER KIMBERLY MORI No. 83255 Exp. 3-31-2017 CIVIL STATE OF CALIFORNIA

The State of California or its officers or agents shall not be responsible for the accuracy or completeness of scanned copies of this plan sheet.

NOTE:

Sculpted shotcrete not shown for clarity.

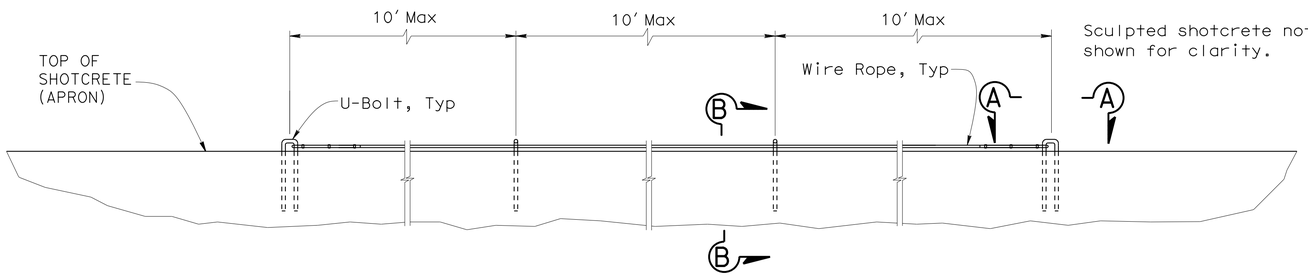

TYPICAL SAFETY HOOKUP ELEVATION

No Scale

UPPER WALL, "B1" Line	
From Sta "B1"	To Sta "B1"
30+26	34+18

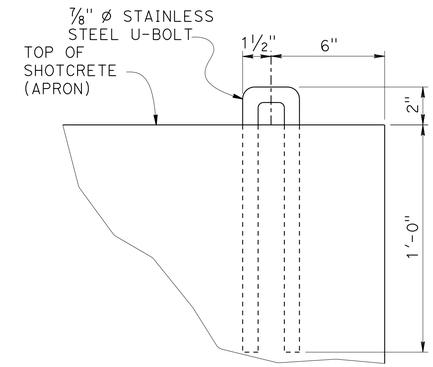

SECTION B-B

3" = 1'-0"

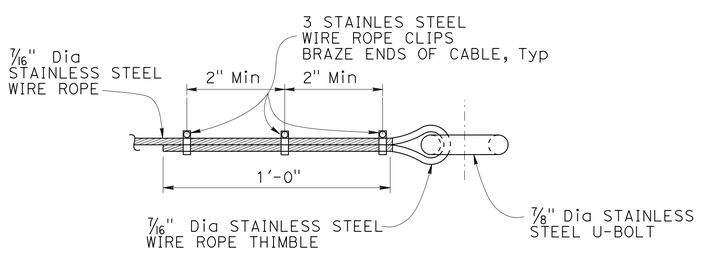

VIEW A-A

No Scale

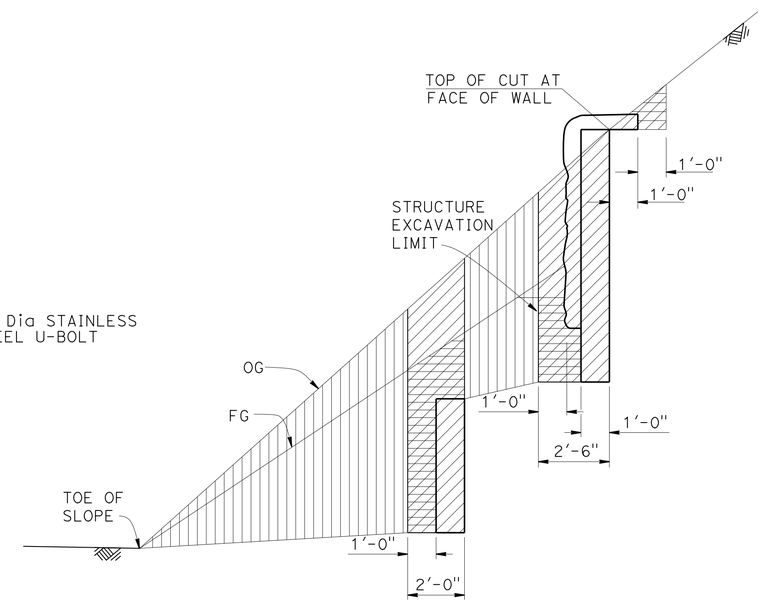

LIMITS OF EXCAVATION AND BACKFILL

NO SCALE

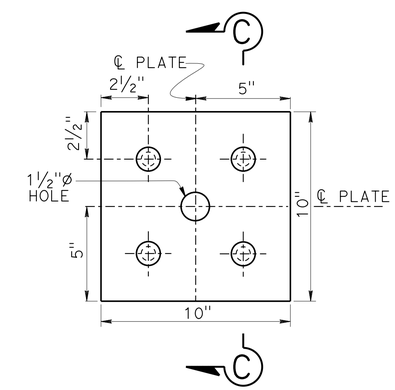

BEARING PLATE DETAIL

3" = 1'-0"

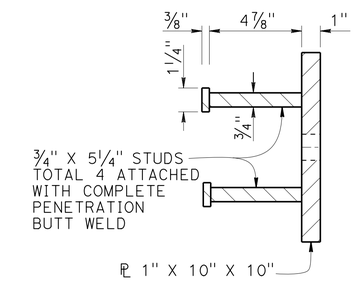

SECTION C-C

3" = 1'-0"

LEGEND:

- STRUCTURE EXCAVATION (SOIL NAIL WALL)
- ROADWAY EXCAVATION, SEE "ROADWAY PLANS"
- STRUCTURE BACKFILL (SOIL NAIL WALL)

	BY	CHECKED
DESIGN	P. Lutz	K. Mori
DETAILS	R. Heider	K. Mori
QUANTITIES	P. Lutz	K. Mori

STATE OF CALIFORNIA
DEPARTMENT OF TRANSPORTATION

DIVISION OF ENGINEERING SERVICES
STRUCTURE DESIGN
DESIGN BRANCH 9

BRIDGE NO. 20E0091
POST MILE 30.5

SOIL NAIL WALL AT PM 30.5
RETAINING WALL DETAILS No. 3

STRUCTURES DESIGN DETAIL SHEET (ENGLISH) (REV. 09-01-10)

ORIGINAL SCALE IN INCHES FOR REDUCED PLANS 0 1 2 3

UNIT: 3594
PROJECT NUMBER & PHASE: 04000212721
CONTRACT NO.: 04-3G0804

DISREGARD PRINTS BEARING EARLIER REVISION DATES

REVISION DATES 4-13-15 10-13-15 2-1-16

SHEET 11 OF 19

FILE => 20e0091-k-det03.dgn

USERNAME => s128357 DATE PLOTTED => 19-SEP-2016 TIME PLOTTED => 13:35

DIST	COUNTY	ROUTE	POST MILES TOTAL PROJECT	SHEET No.	TOTAL SHEETS
4	Son	1	30.5	90	97

REGISTERED CIVIL ENGINEER 2-8-16 DATE

6-27-16
PLANS APPROVAL DATE

REGISTERED PROFESSIONAL ENGINEER KIMBERLY MORI No. 83255 Exp. 3-31-2017 CIVIL STATE OF CALIFORNIA

The State of California or its officers or agents shall not be responsible for the accuracy or completeness of scanned copies of this plan sheet.

NOTES:

1. Primary Strata lines drawn on the front elevation are to be used as a guide for layout of Primary Strata line reinforcement. See "SCULPTED SHOTCRETE DETAILS" Sheet.
2. Secondary Strata lines drawn on the front elevation are to be used as a general guide. Strata lines shall be sculpted to mimic local geology.
3. This sheet accurate for sculpted shotcrete only.
4. Sculpted shotcrete shall be continuous throughout the face of the wall.
5. Additional shotcrete needed for carving the Primary Strata lines to be reinforced as shown on "SCULPTED SHOTCRETE DETAILS" sheet.
6. Primary Strata lines to be tapered into the top and bottom of wall.
7. Secondary Strata lines are not to exceed 2" amplitude.

LEGEND

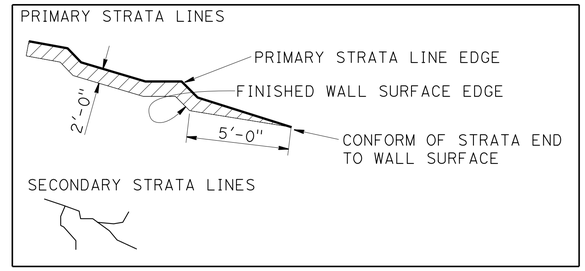

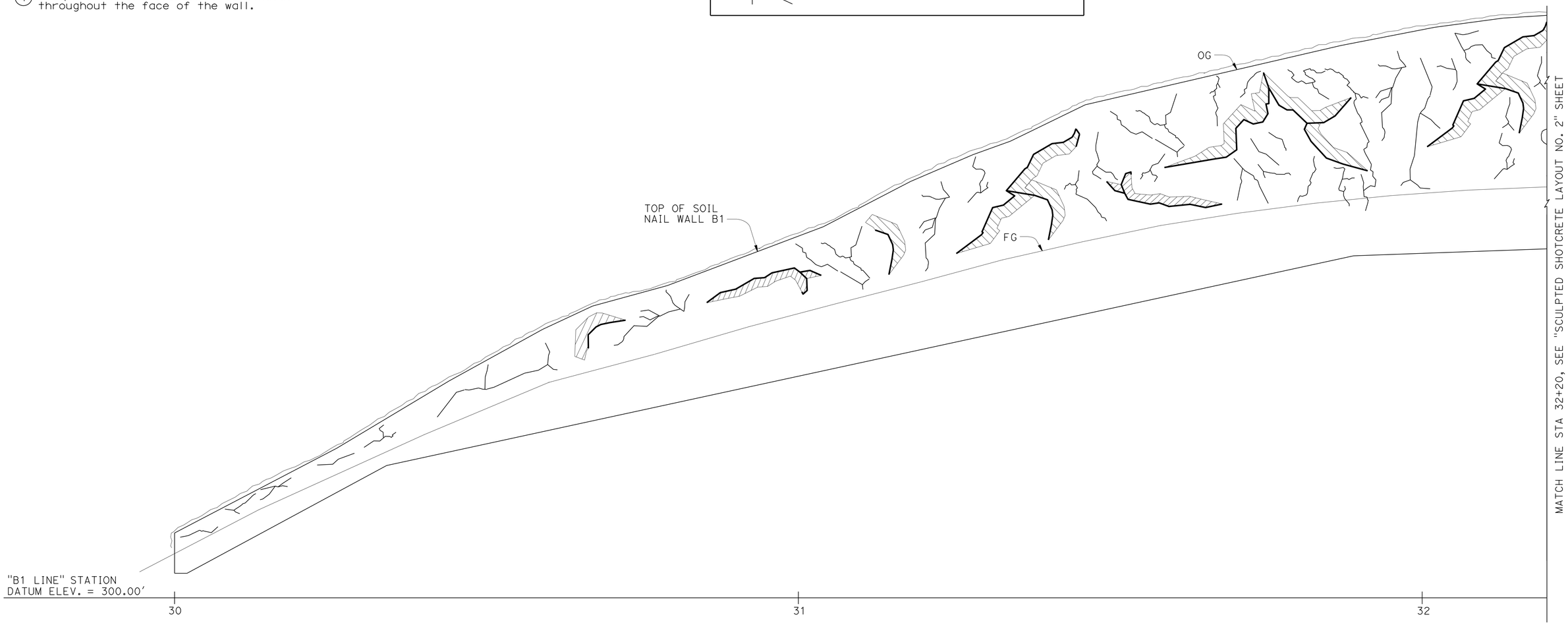

DEVELOPED ELEVATION
SCULPTED SHOTCRETE WALL SURFACE TREATMENT

1/8" = 1'-0"

NOTE:
For Details see "SCULPTED SHOTCRETE DETAILS" Sheet

	BY	CHECKED
DESIGN	P. Lutz	K. Mori
DETAILS	R. Heider	K. Mori
QUANTITIES	P. Lutz	K. Mori

STATE OF CALIFORNIA
DEPARTMENT OF TRANSPORTATION

DIVISION OF ENGINEERING SERVICES
STRUCTURE DESIGN
DESIGN BRANCH 9

BRIDGE NO. 20E0091
POST MILE 30.5

SOIL NAIL WALL AT PM 30.5
SCULPTED SHOTCRETE LAYOUT No. 1

STRUCTURES DESIGN DETAIL SHEET (ENGLISH) (REV. 09-01-10)

ORIGINAL SCALE IN INCHES FOR REDUCED PLANS 0 1 2 3

UNIT: 3594
PROJECT NUMBER & PHASE: 04000212721
CONTRACT NO.: 04-3G0804

DISREGARD PRINTS BEARING EARLIER REVISION DATES

REVISION DATES: 6-27-15 2-1-16

SHEET 12 OF 19

FILE => 20e0091-1-sculpshotlay01.dgn

USERNAME => s128357 DATE PLOTTED => 19-SEP-2016 TIME PLOTTED => 13:35

DIST	COUNTY	ROUTE	POST MILES TOTAL PROJECT	SHEET No.	TOTAL SHEETS
04	Son	1	30.5	91	97

REGISTERED CIVIL ENGINEER 2-8-16 DATE

6-27-16
PLANS APPROVAL DATE

REGISTERED PROFESSIONAL ENGINEER KIMBERLY MORI No. 83255 Exp. 3-31-2017 CIVIL STATE OF CALIFORNIA

The State of California or its officers or agents shall not be responsible for the accuracy or completeness of scanned copies of this plan sheet.

NOTES:

1. Primary Strata lines drawn on the front elevation are to be used as a guide for layout of Primary Strata line reinforcement. See "SCULPTED SHOTCRETE DETAILS" Sheet.
2. Secondary Strata lines drawn on the front elevation are to be used as a general guide. Strata lines shall be sculpted to mimic local geology.
3. This sheet accurate for sculpted shotcrete only.
4. Sculpted shotcrete shall be continuous throughout the face of the wall.
5. Additional shotcrete needed for carving the Primary Strata lines to be reinforced as shown on "SCULPTED SHOTCRETE DETAILS" sheet.
6. Primary Strata lines to be tapered into the top and bottom of wall.
7. Secondary Strata lines are not to exceed 2" amplitude.

LEGEND

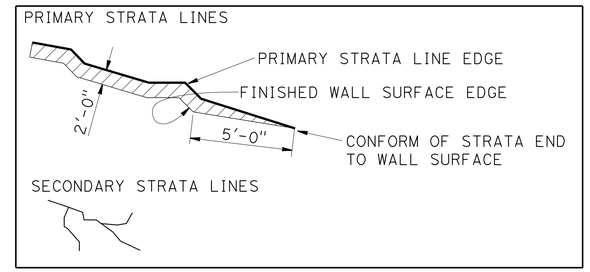

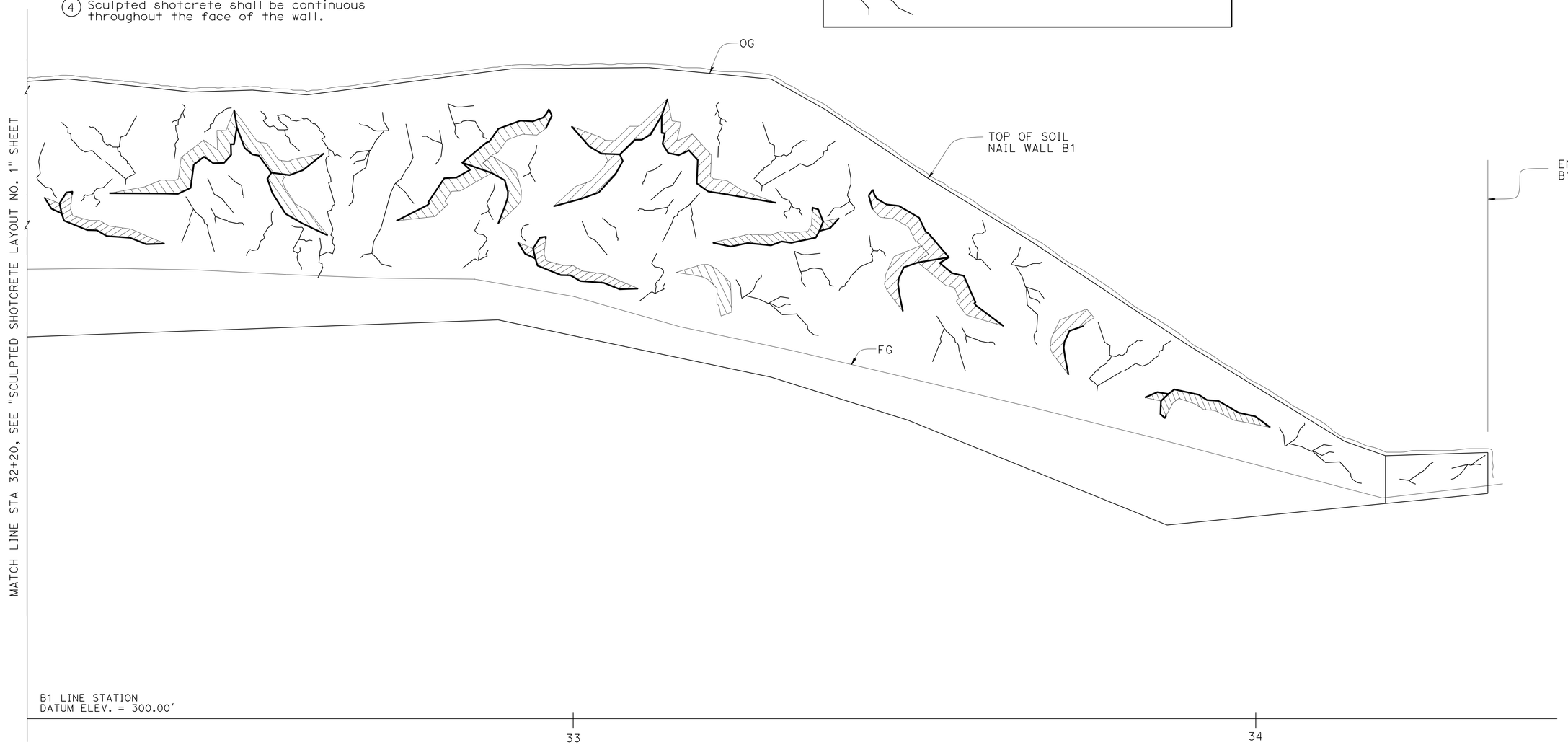

DEVELOPED ELEVATION
SCULPTED SHOTCRETE WALL SURFACE TREATMENT

1/8" = 1'-0"

NOTE:
For Details see "SCULPTED SHOTCRETE DETAILS" Sheet

	BY	CHECKED
DESIGN	P. Lutz	K. Mori
DETAILS	R. Heider	K. Mori
QUANTITIES	P. Lutz	K. Mori

STATE OF CALIFORNIA
DEPARTMENT OF TRANSPORTATION

DIVISION OF ENGINEERING SERVICES
STRUCTURE DESIGN
DESIGN BRANCH 9

BRIDGE NO. 20E0091
POST MILE 30.5

SOIL NAIL WALL AT PM 30.5
SCULPTED SHOTCRETE LAYOUT No. 2

STRUCTURES DESIGN DETAIL SHEET (ENGLISH) (REV. 09-01-10)

ORIGINAL SCALE IN INCHES FOR REDUCED PLANS 0 1 2 3

UNIT: 3594
PROJECT NUMBER & PHASE: 04000212721
CONTRACT NO.: 04-3G0804

DISREGARD PRINTS BEARING EARLIER REVISION DATES

REVISION DATES: ~~5-11-15~~ 2-1-16

SHEET 13 OF 19

FILE => 20e0091-1-sculpshotlay02.dgn

USERNAME => s128357 DATE PLOTTED => 19-SEP-2016 TIME PLOTTED => 13:35

DIST	COUNTY	ROUTE	POST MILES TOTAL PROJECT	SHEET No.	TOTAL SHEETS
04	Son	1	30.5	92	97

REGISTERED CIVIL ENGINEER 2-8-16 DATE

6-27-16
PLANS APPROVAL DATE

REGISTERED PROFESSIONAL ENGINEER KIMBERLY MORI No. 83255 Exp. 3-31-2017 CIVIL STATE OF CALIFORNIA

The State of California or its officers or agents shall not be responsible for the accuracy or completeness of scanned copies of this plan sheet.

NOTES:

1. Primary Strata lines drawn on the front elevation are to be used as a guide for layout of Primary Strata line reinforcement. See "SCULPTED SHOTCRETE DETAILS" Sheet.
2. Secondary Strata lines drawn on the front elevation are to be used as a general guide. Strata lines shall be sculpted to mimic local geology.
3. This sheet accurate for sculpted shotcrete only.
4. Sculpted shotcrete shall be continuous throughout the face of the wall.
5. Additional shotcrete needed for carving the Primary Strata lines to be reinforced as shown on "SCULPTED SHOTCRETE DETAILS" sheet.
6. Primary Strata lines to be tapered into the top and bottom of wall.
7. Secondary Strata lines are not to exceed 2" amplitude.

LEGEND

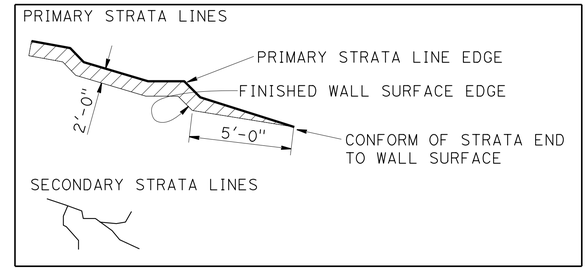

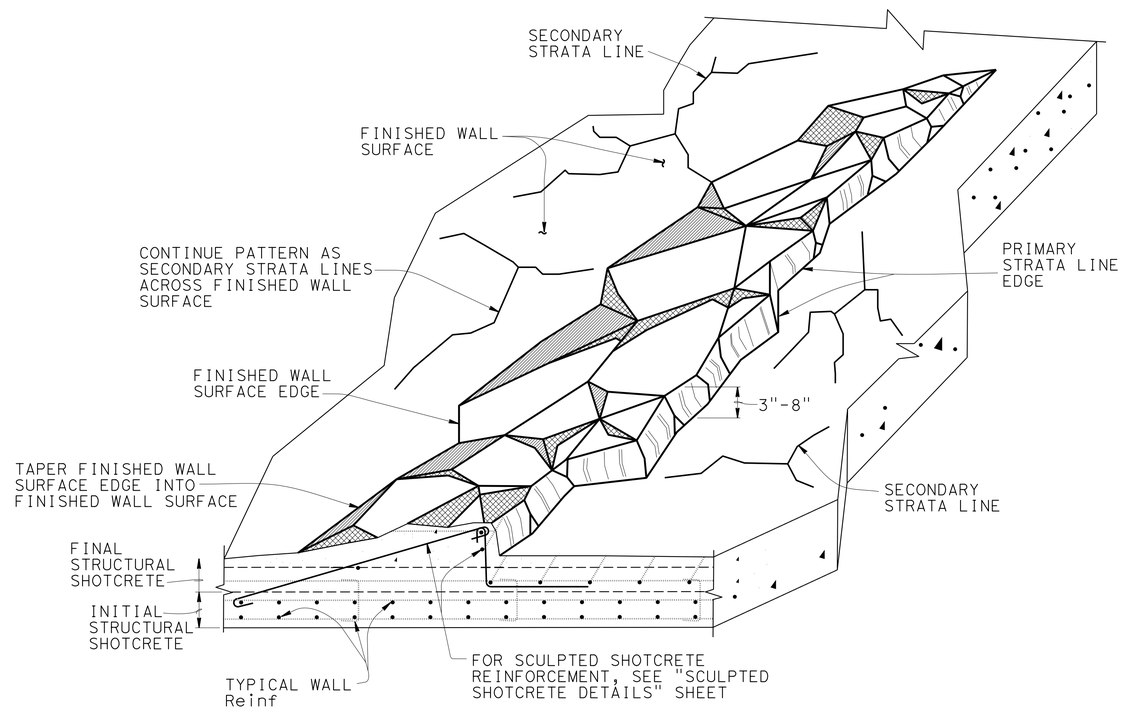

NOTE:
For Details see "SCULPTED SHOTCRETE DETAILS" Sheet

STRATA DETAIL - PRIMARY STRATA LINE
CROSS SECTION
PERSPECTIVE

NO SCALE

	BY	CHECKED
DESIGN	P. Lutz	K. Mori
DETAILS	R. Heider	K. Mori
QUANTITIES	P. Lutz	K. Mori

STATE OF CALIFORNIA
DEPARTMENT OF TRANSPORTATION

DIVISION OF ENGINEERING SERVICES
STRUCTURE DESIGN
DESIGN BRANCH 9

BRIDGE NO. 20E0091
POST MILE 30.5

SOIL NAIL WALL AT PM 30.5
STRATA DETAIL

STRUCTURES DESIGN DETAIL SHEET (ENGLISH) (REV. 09-01-10)

ORIGINAL SCALE IN INCHES FOR REDUCED PLANS 0 1 2 3

UNIT: 3594
PROJECT NUMBER & PHASE: 04000212721
CONTRACT NO.: 04-3G0804

DISREGARD PRINTS BEARING EARLIER REVISION DATES

REVISION DATES 5-11-15

SHEET 14 OF 19

FILE => 20e0091-m-stratadetl.dgn

USERNAME => s128357 DATE PLOTTED => 19-SEP-2016 TIME PLOTTED => 13:35

DIST	COUNTY	ROUTE	POST MILES TOTAL PROJECT	SHEET No.	TOTAL SHEETS
04	Son	1	30.5	93	97

REGISTERED CIVIL ENGINEER 2-8-16 DATE

6-27-16
PLANS APPROVAL DATE

REGISTERED PROFESSIONAL ENGINEER KIMBERLY MORI No. 83255 Exp. 3-31-2017 CIVIL STATE OF CALIFORNIA

The State of California or its officers or agents shall not be responsible for the accuracy or completeness of scanned copies of this plan sheet.

NOTES:
1. Maximum 6" thick reinforced shotcrete zone for top of wall sculpted shotcrete.
2. #5 continuous @ 12 shall taper and embed into the wall to a minimum depth as shown on "PRIMARY STRATA LINE END TAPER" detail.
3. Angle of primary strata line across wall apron 15 degrees for cross slopes 0-10%, 45 degrees for cross slopes greater than 10%.
4. Final structural shotcrete face to which surface clearances are measured.

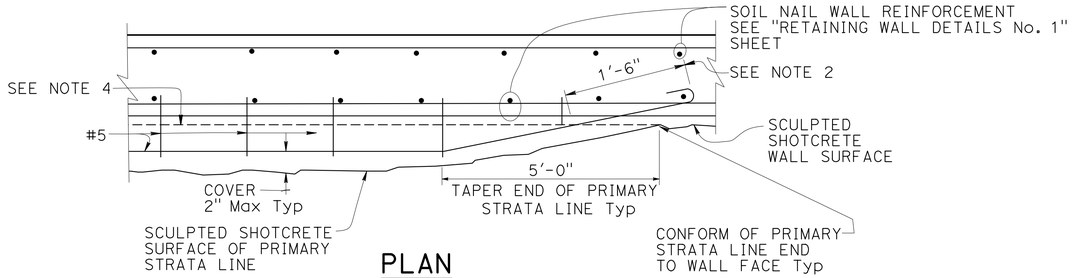

PLAN
PRIMARY STRATA LINE END TAPER
NO SCALE

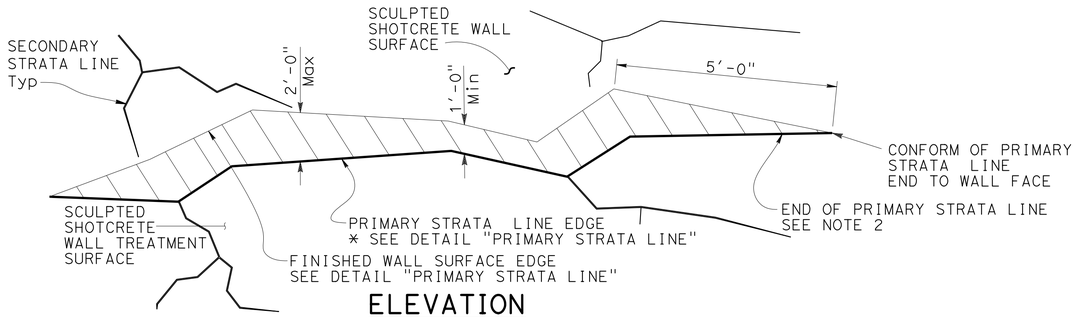

ELEVATION
PRIMARY STRATA LINE TAPER
NO SCALE

* SEE LEGEND ON "STRATA DETAIL" sheet

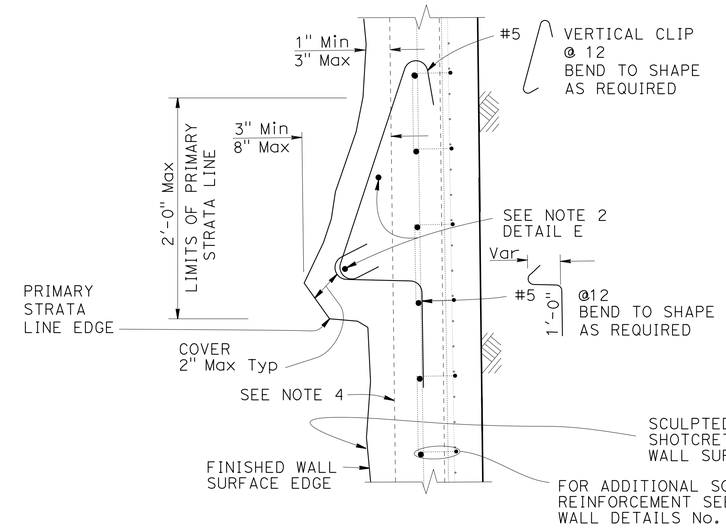

PRIMARY STRATA LINE

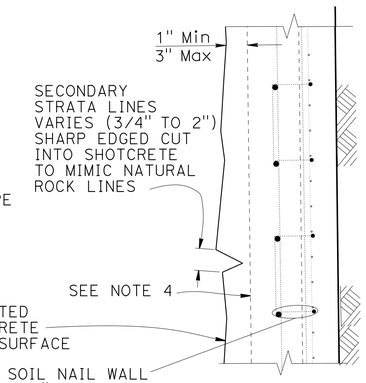

SECONDARY STRATA LINE

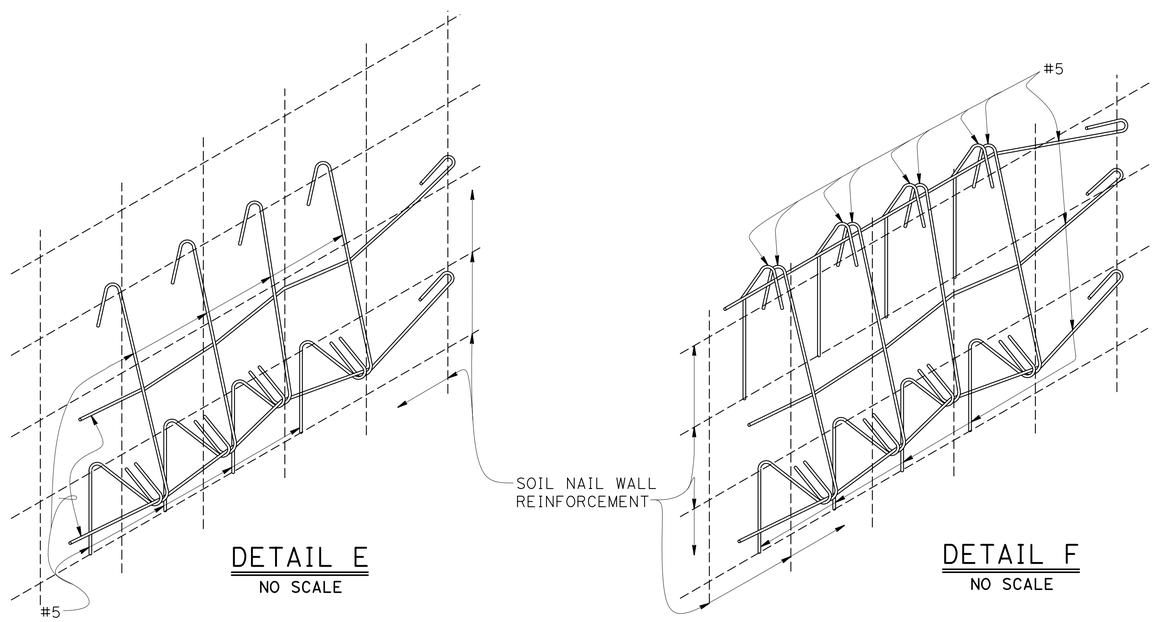

DETAIL E
NO SCALE

DETAIL F
NO SCALE

NOTES:
For Soil Nail Wall Reinforcement see "RETAINING WALL DETAILS No. 1" sheet

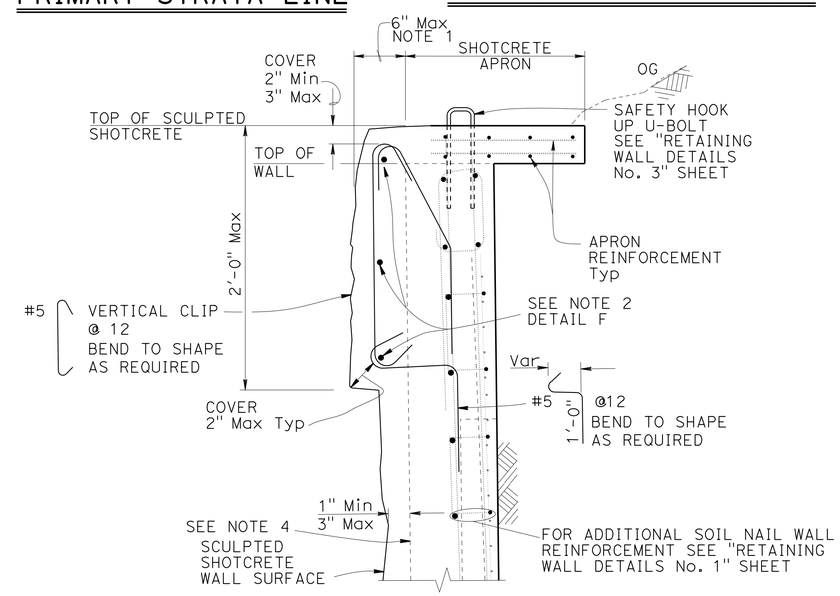

PRIMARY STRATA AT TOP OF WALL
CROSS SECTIONS
NO SCALE

DESIGN	BY P. Lutz	CHECKED K. Mori	
DETAILS	BY R. Heider	CHECKED K. Mori	
QUANTITIES	BY P. Lutz	CHECKED K. Mori	

STATE OF CALIFORNIA
DEPARTMENT OF TRANSPORTATION

DIVISION OF ENGINEERING SERVICES
STRUCTURE DESIGN
DESIGN BRANCH 9

BRIDGE NO. 20E0091
POST MILE 30.5

SOIL NAIL WALL AT PM 30.5
SCULPTED SHOTCRETE DETAILS

STRUCTURES DESIGN DETAIL SHEET (ENGLISH) (REV. 09-01-10)

ORIGINAL SCALE IN INCHES FOR REDUCED PLANS 0 1 2 3

UNIT: 3594
PROJECT NUMBER & PHASE: 04000212721
CONTRACT NO.: 04-3G0804

DISREGARD PRINTS BEARING EARLIER REVISION DATES

REVISION DATES 5-12-15

SHEET 15 OF 19

FILE => 20e0091-n-achdets01.dgn

USERNAME => s128357 DATE PLOTTED => 19-SEP-2016 TIME PLOTTED => 13:35

DIST	COUNTY	ROUTE	POST MILES TOTAL PROJECT	SHEET No.	TOTAL SHEETS
04	Son	1	30.5	94	97

REGISTERED CIVIL ENGINEER 2-8-16 DATE

6-27-16
PLANS APPROVAL DATE

REGISTERED PROFESSIONAL ENGINEER KIMBERLY MORI No. 83255 Exp. 3-31-2017 CIVIL STATE OF CALIFORNIA

The State of California or its officers or agents shall not be responsible for the accuracy or completeness of scanned copies of this plan sheet.

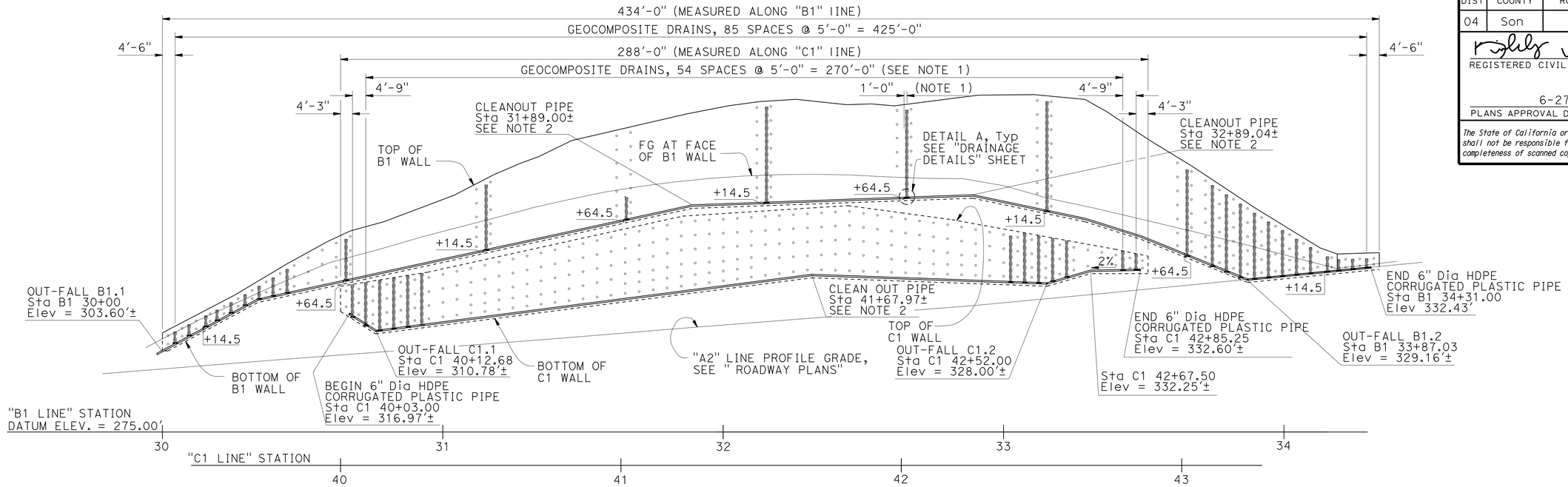

DEVELOPED ELEVATION

1" = 20'

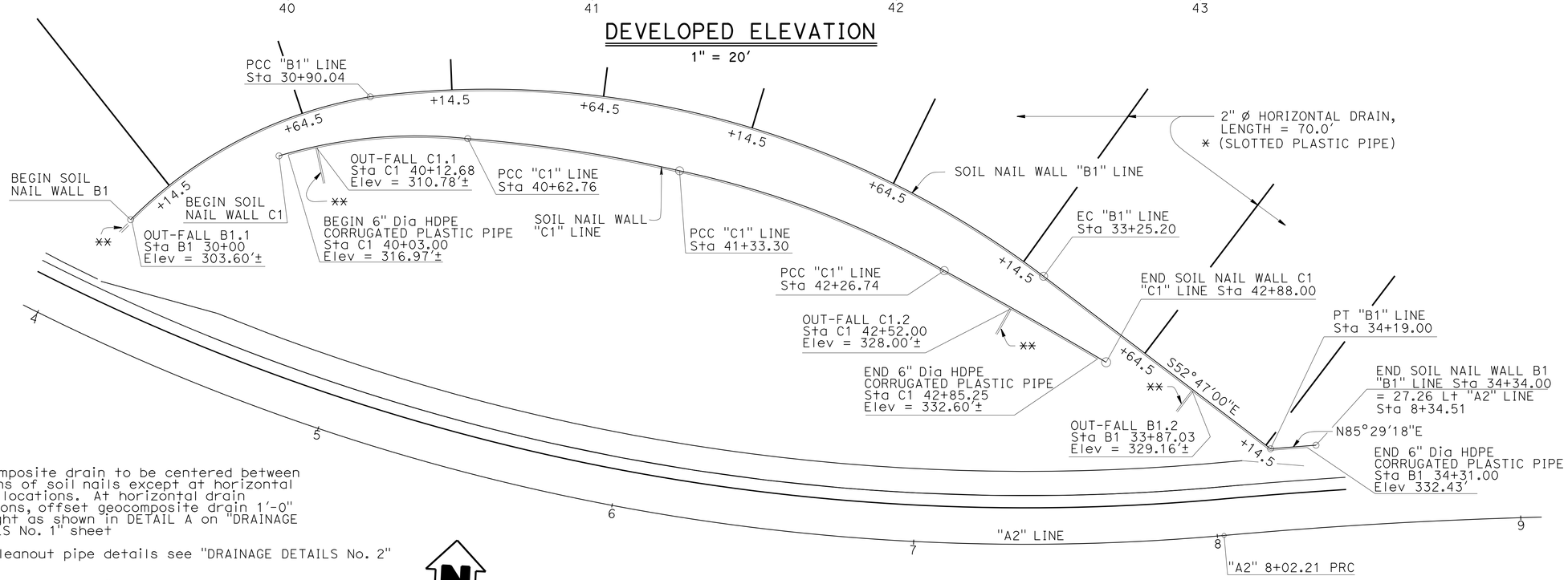

NOTES:

1. Geocomposite drain to be centered between columns of soil nails except at horizontal drain locations. At horizontal drain locations, offset geocomposite drain 1'-0" to right as shown in DETAIL A on "DRAINAGE DETAILS No. 1" sheet
2. For Cleanout pipe details see "DRAINAGE DETAILS No. 2" sheet

** See "ROADWAY PLANS" for drainage leading away from out-fall locations

PLAN

1" = 20'

	BY	CHECKED
DESIGN	P. Lutz	K. Mori
DETAILS	R. Heider	K. Mori
QUANTITIES	P. Lutz	K. Mori

STATE OF CALIFORNIA
DEPARTMENT OF TRANSPORTATION

DIVISION OF ENGINEERING SERVICES
STRUCTURE DESIGN
DESIGN BRANCH 9

BRIDGE NO. 20E0091
POST MILE 30.5

SOIL NAIL WALL AT PM 30.5
DRAINAGE PLAN

STRUCTURES DESIGN DETAIL SHEET (ENGLISH) (REV. 09-01-10)

ORIGINAL SCALE IN INCHES FOR REDUCED PLANS 0 1 2 3

UNIT: 3594
PROJECT NUMBER & PHASE: 04000212721
CONTRACT NO.: 04-3G0804

DISREGARD PRINTS BEARING EARLIER REVISION DATES

REVISION DATES 6-08-15 1-28-16

SHEET 16 OF 19

FILE => 20e0091-o-adrainpln.dgn

USERNAME => s128357 DATE PLOTTED => 19-SEP-2016 TIME PLOTTED => 13:35

DIST	COUNTY	ROUTE	POST MILES TOTAL PROJECT	SHEET No.	TOTAL SHEETS
04	Son	1	30.5	95	97

REGISTERED CIVIL ENGINEER 2-8-16 DATE

6-27-16
PLANS APPROVAL DATE

REGISTERED PROFESSIONAL ENGINEER KIMBERLY MORI No. 83255 Exp. 3-31-2017 CIVIL STATE OF CALIFORNIA

The State of California or its officers or agents shall not be responsible for the accuracy or completeness of scanned copies of this plan sheet.

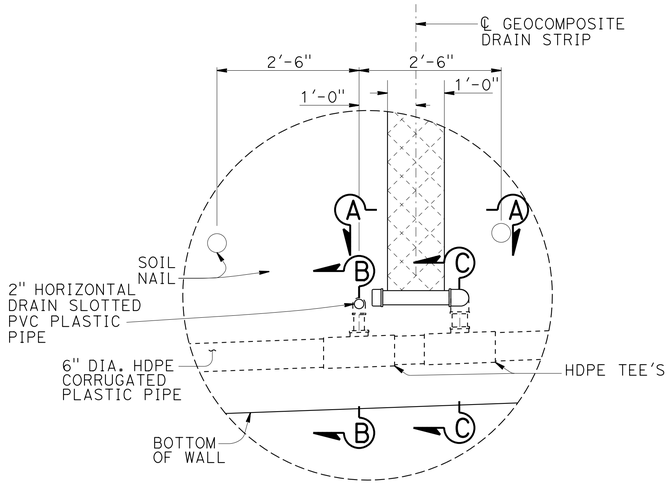

DETAIL A

¾" = 1'-0"
(MIRROR VIEW)

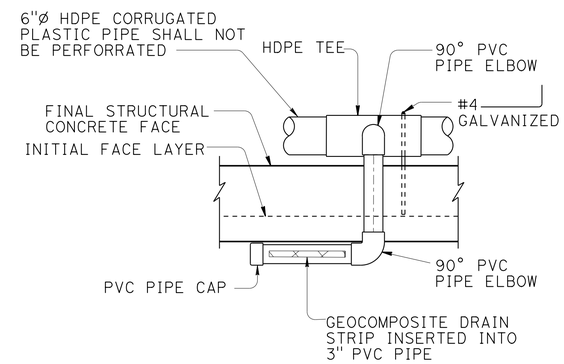

SECTION A-A

1" = 1'-0"

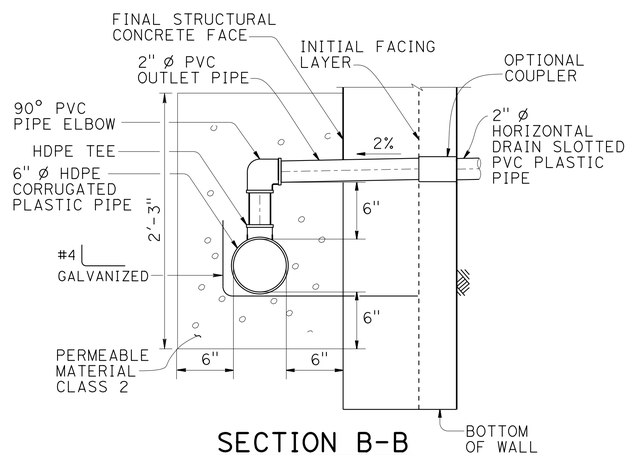

SECTION B-B

1½" = 1'-0"

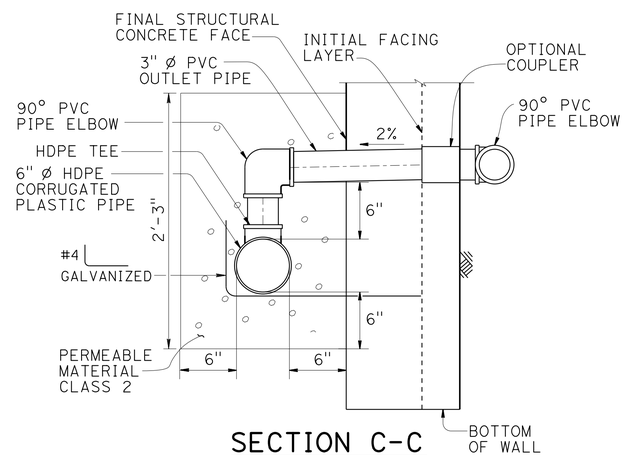

SECTION C-C

1½" = 1'-0"

NOTES:

1. Permeable material not shown in "DETAIL A" or "SECTION A-A" for clarity.

DESIGN	BY Kim Mori	CHECKED Nasser Tachta	
DETAILS	BY Tim Fairall	CHECKED Nasser Tachta	
QUANTITIES	BY Kim Mori	CHECKED Nasser Tachta	

STATE OF CALIFORNIA
DEPARTMENT OF TRANSPORTATION

DIVISION OF ENGINEERING SERVICES
STRUCTURE DESIGN
DESIGN BRANCH 9

BRIDGE NO. 20E0091
POST MILE 30.5

SOIL NAIL WALL AT PM 30.5
DRAINAGE DETAILS No. 1

STRUCTURES DESIGN DETAIL SHEET (ENGLISH) (REV. 09-01-10)

ORIGINAL SCALE IN INCHES FOR REDUCED PLANS 0 1 2 3

UNIT: 3594
PROJECT NUMBER & PHASE: 04000212721
CONTRACT NO.: 04-3G0804

DISREGARD PRINTS BEARING EARLIER REVISION DATES

REVISION DATES: 6-26-15 1-28-16 2-8-16

SHEET 17 OF 19

FILE => 20e0091-o-draindets01.dgn

USERNAME => s128357 DATE PLOTTED => 19-SEP-2016 TIME PLOTTED => 13:35

DIST	COUNTY	ROUTE	POST MILES TOTAL PROJECT	SHEET No.	TOTAL SHEETS
04	Son	1	30.5	96	97

REGISTERED CIVIL ENGINEER 2-8-16 DATE

6-27-16
PLANS APPROVAL DATE

REGISTERED PROFESSIONAL ENGINEER KIMBERLY MORI No. 83255 Exp. 3-31-2017 CIVIL STATE OF CALIFORNIA

The State of California or its officers or agents shall not be responsible for the accuracy or completeness of scanned copies of this plan sheet.

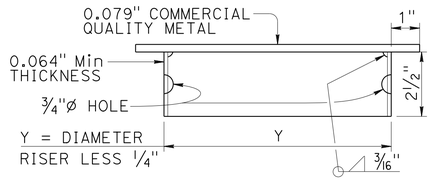

WELDED METAL COVER

NTS

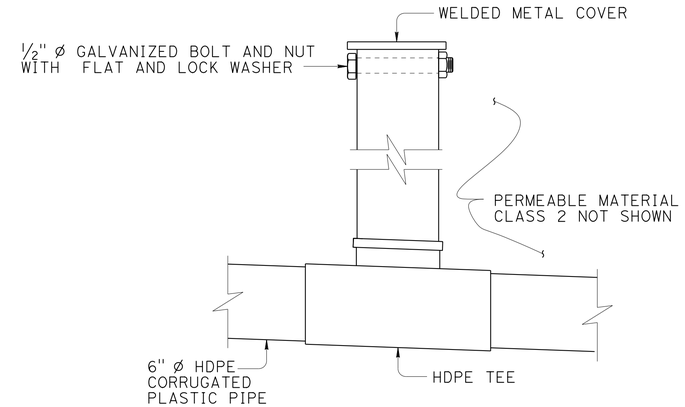

CLEANOUT RISER

NTS

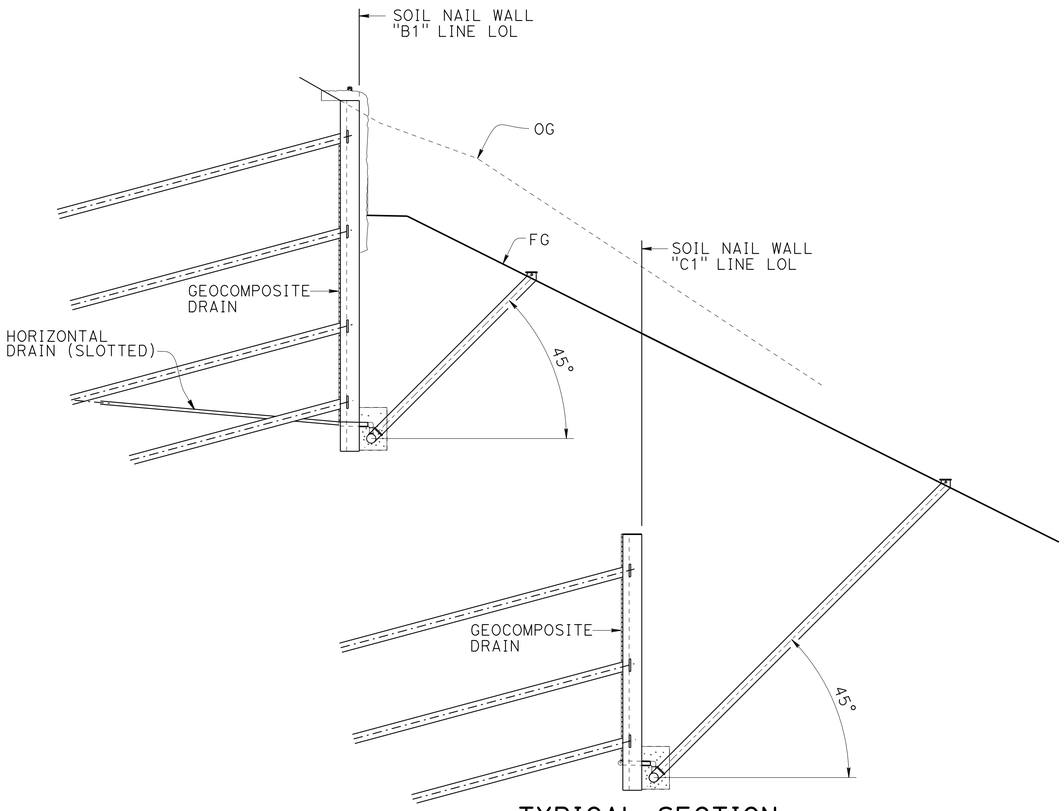

TYPICAL SECTION AT CLEANOUT RISER LOCATIONS

1/4" = 1'-0"

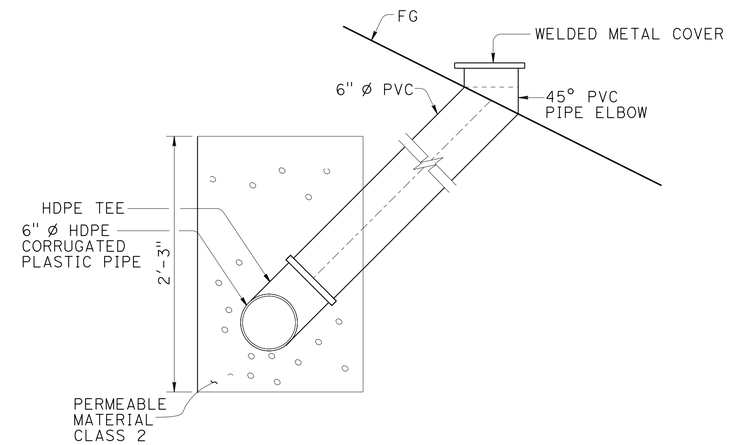

CLEANOUT RISER ANGLED TO CUT SLOPE

NTS

DESIGN	BY Kim Mori	CHECKED Nasser Tachta	
DETAILS	BY Tim Fairall	CHECKED Nasser Tachta	
QUANTITIES	BY Kim Mori	CHECKED Nasser Tachta	

STATE OF CALIFORNIA DEPARTMENT OF TRANSPORTATION

DIVISION OF ENGINEERING SERVICES STRUCTURE DESIGN DESIGN BRANCH 9

BRIDGE NO. 20E0091 POST MILE 30.5

SOIL NAIL WALL AT PM 30.5
DRAINAGE DETAILS No. 2

STRUCTURES DESIGN DETAIL SHEET (ENGLISH) (REV. 09-01-10)

ORIGINAL SCALE IN INCHES FOR REDUCED PLANS 0 1 2 3

UNIT: 3594
PROJECT NUMBER & PHASE: 04000212721 CONTRACT NO.: 04-3G0804

DISREGARD PRINTS BEARING EARLIER REVISION DATES

REVISION DATES 2-5-15

SHEET 18 OF 19

FILE => 20e0091-o-draindets02.dgn

USERNAME => s128357 DATE PLOTTED => 19-SEP-2016 TIME PLOTTED => 13:35

DIST	COUNTY	ROUTE	POST MILES TOTAL PROJECT	SHEET No	TOTAL SHEETS
04	Son	1	30.5	97	97

Ali Kaddoura 03-04-15
REGISTERED CIVIL ENGINEER

6-27-16
PLANS APPROVAL DATE

REGISTERED PROFESSIONAL ENGINEER Ali K. Kaddoura No. 55710 Exp. 12-31-16 CIVIL STATE OF CALIFORNIA

The State of California or its officers or agents shall not be responsible for the accuracy or completeness of electronic copies of this plan sheet.

This LOTB sheet was prepared in accordance with the Caltrans Soil & Rock Logging, Classification, & Presentation Manual (2010 Edition).

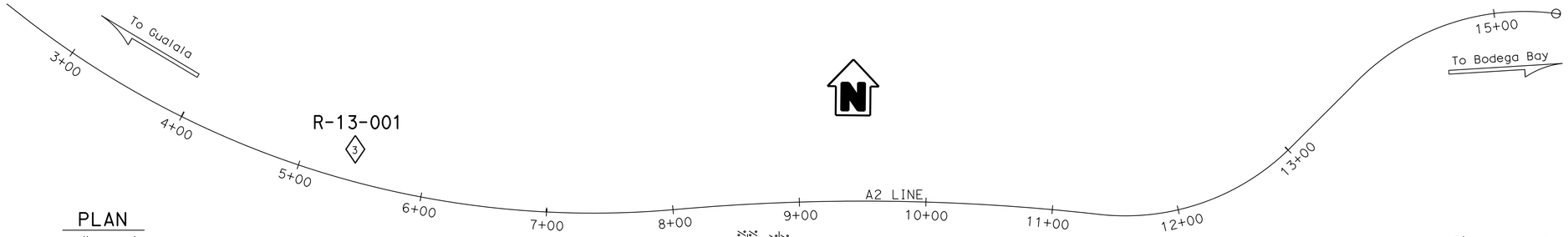

PLAN
1" = 50'

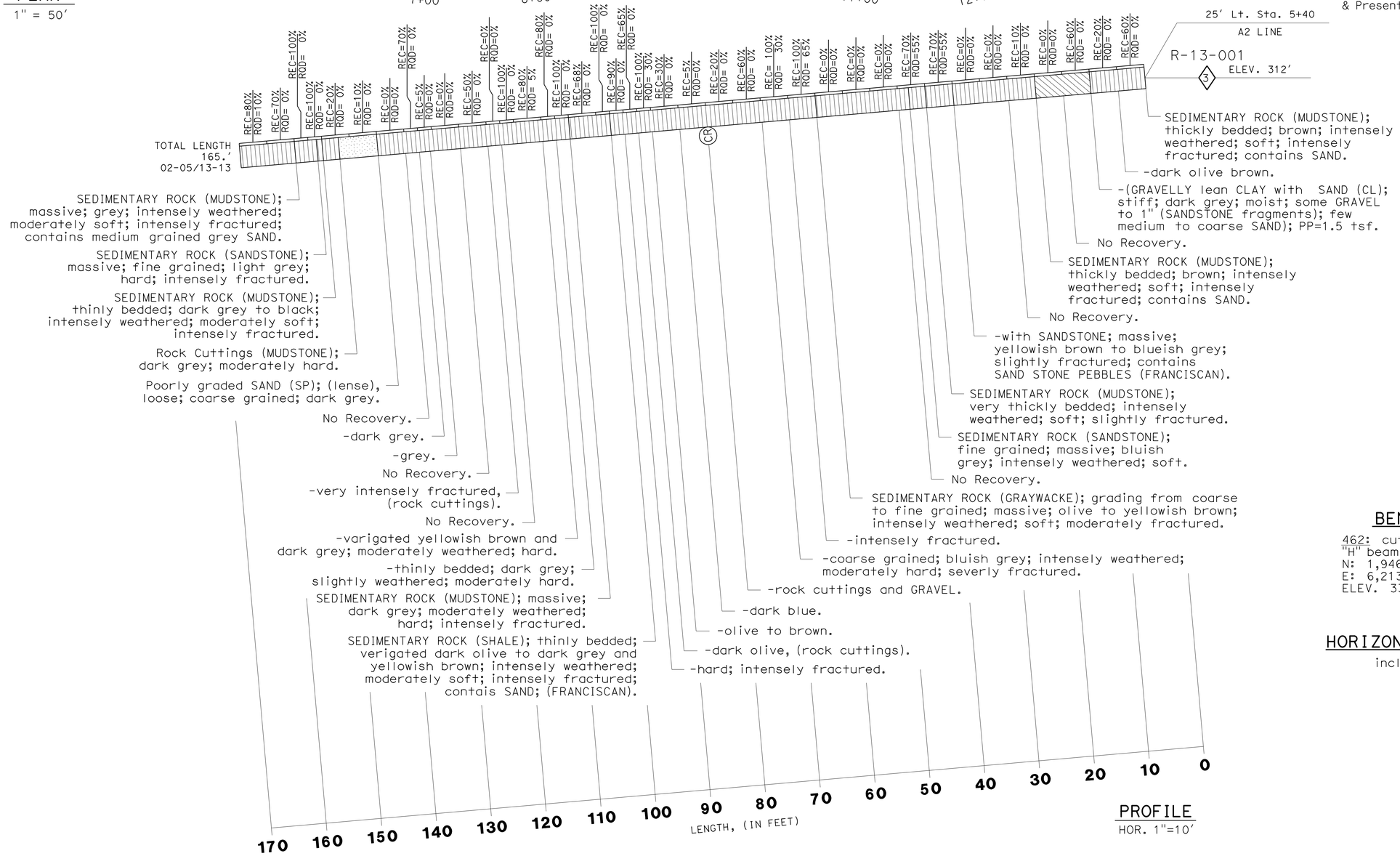

PROFILE
HOR. 1"=10'

BENCH MARK
462: cut "+" top of "H" beam/ retaining wall
N: 1,946,535.057
E: 6,213,606.805
ELEV. 332.48'

HORIZONTAL DRILLING
inclination < 5°

ENGINEERING SERVICES		GEOTECHNICAL SERVICES	STATE OF CALIFORNIA DEPARTMENT OF TRANSPORTATION	DIVISION OF ENGINEERING SERVICES OFFICE OF GEOTECHNICAL DESIGN BRANCH	BRIDGE NO. 20E0091 POST MILES 30.5	SOIL NAIL WALL AT PM 30.5 LOG OF TEST BORINGS 1 OF 1
FUNCTIONAL SUPERVISOR	DRAWN BY: M. Reynolds 04/13	FIELD INVESTIGATION BY:				
NAME: H. Nikoui	CHECKED BY: R. Nashed	A. Kaddoura				

ORIGINAL SCALE IN INCHES FOR REDUCED PLANS 0 1 2 3

UNIT: 3660
PROJECT NUMBER & PHASE: 04000212721 CONTRACT NO.: 04-3G0804

DISREGARD PRINTS BEARING EARLIER REVISION DATES

REVISION DATES | SHEET 19 OF 19

FILE => 20e0091-z-ltb.dgn

USERNAME => s128357 DATE PLOTTED => 19-SEP-2016 TIME PLOTTED => 13:35