Dist	COUNTY	ROUTE	KILOMETER POST TOTAL PROJECT	SHEET No.	TOTAL SHEETS
11	SD	5/56	52.6/56.0, R0.0/R4.1		

REGISTERED CIVIL ENGINEER DATE

PLANS APPROVAL DATE

REGISTERED PROFESSIONAL ENGINEER No. Exp. CIVIL STATE OF CALIFORNIA

THE STATE OF CALIFORNIA OR ITS OFFICERS OR AGENTS SHALL NOT BE RESPONSIBLE FOR THE ACCURACY OR COMPLETENESS OF ELECTRONIC COPIES OF THIS PLAN SHEET.

Dokken Engineering
5675 Ruffin Road
Suite 250
San Diego, CA 92123

Caltrans Metric

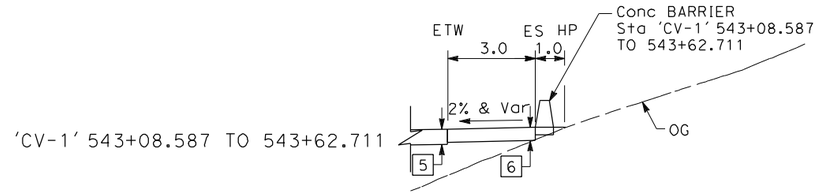

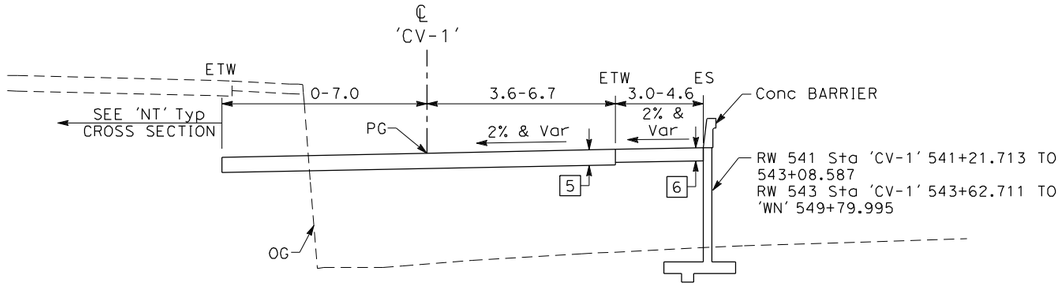

CARMEL VALLEY ROAD NB ON-RAMP

'CV-1' 542+41.431 TO 544+28.983

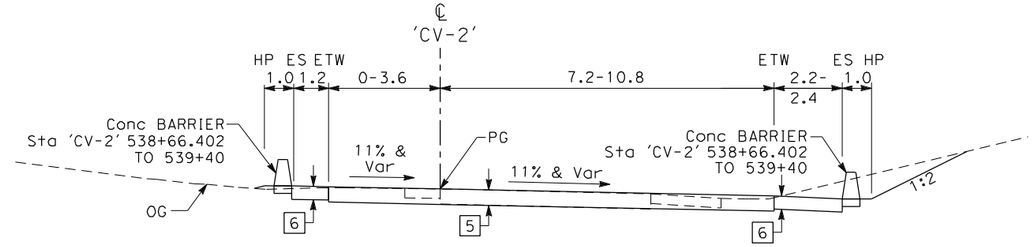

CARMEL VALLEY ROAD NB OFF-RAMP

'CV-2' 537+63.954 TO 539+45.740

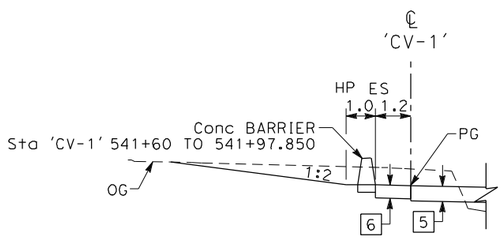

'CV-1' 541+60 TO 541+97.850

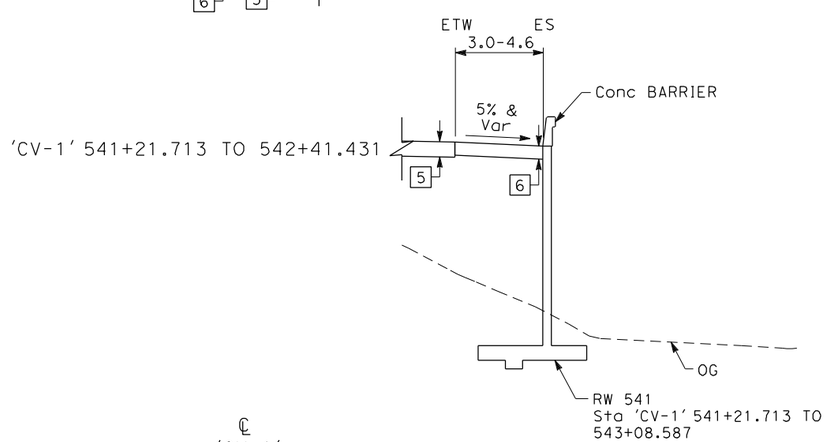

'CV-1' 541+21.713 TO 542+41.431

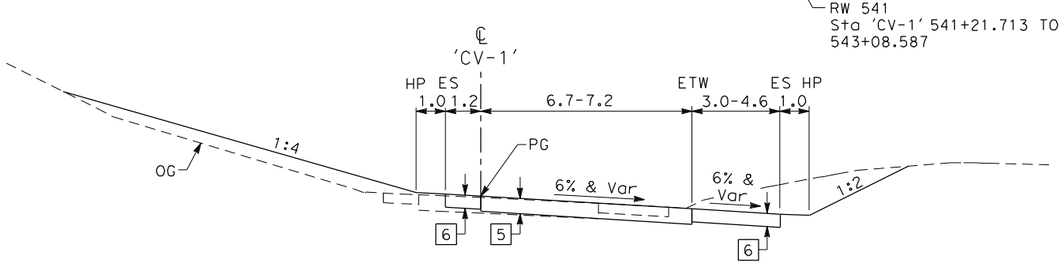

CARMEL VALLEY ROAD NB ON-RAMP

'CV-1' 540+04.756 TO 542+41.431

EXISTING STRUCTURAL SECTION TYPES

1	300 mm PCCP 150 mm ACB 215 mm CI-2 AB	ROUTE 5 MAINLINE	6	165 HMA (TYPE A) 165 mm CI-2 AB	RAMP SHOULDERS
2	180 mm HMA (TYPE A) 270 mm CI-2 AB	ROUTE 5 SHOULDERS	7	225 mm HMA (TYPE A) 420 mm CI-2 AB	ARTERIAL
3	45 mm HMA (TYPE A) 110 mm ACB 170 mm CI-2 AB	ROUTE 56 MAINLINE	8	60 mm HMA (TYPE A)	MINOR CONCRETE (STAMPED)
4	45 mm HMA (TYPE A) 110 mm ACB 170 mm CI-2 AB	ROUTE 56 SHOULDERS	9	100 mm MC	MINOR CONCRETE (SIDEWALK)
5	225 HMA (TYPE A) 300 mm CI-2 AB	RAMP MAINLINE	10	200 mm MC	MINOR CONCRETE (CURB & GUTTER)

STRUCTURAL SECTION TYPES

1	300 mm PCCP 150 mm ACB 215 mm CI-2 AB	ROUTE 5 MAINLINE	6	165 HMA (TYPE A) 165 mm CI-2 AB	RAMP SHOULDERS
2	180 mm HMA (TYPE A) 270 mm CI-2 AB	ROUTE 5 SHOULDERS	7	225 mm HMA (TYPE A) 420 mm CI-2 AB	ARTERIAL
3	45 mm HMA (TYPE A) 110 mm ACB 170 mm CI-2 AB	ROUTE 56 MAINLINE	8	60 mm HMA (TYPE A)	MINOR CONCRETE (STAMPED)
4	45 mm HMA (TYPE A) 110 mm ACB 170 mm CI-2 AB	ROUTE 56 SHOULDERS	9	100 mm MC	MINOR CONCRETE (SIDEWALK)
5	225 HMA (TYPE A) 300 mm CI-2 AB	RAMP MAINLINE	10	200 mm MC	MINOR CONCRETE (CURB & GUTTER)

ALTERNATIVE 2
TYPICAL CROSS SECTIONS

NO SCALE

X-1

ALL DIMENSIONS ARE IN METERS UNLESS OTHERWISE SHOWN

REVISED BY | DATE REVISED

CALCULATED-DESIGNED BY | CHECKED BY

CONSULTANT FUNCTIONAL SUPERVISOR

STATE OF CALIFORNIA - DEPARTMENT OF TRANSPORTATION

Caltrans

LAST REVISION 00-00-00 | DATE PLOTTED => 3/30/2012 | TIME PLOTTED => 1:01:07 PM

Dist	COUNTY	ROUTE	KILOMETER POST TOTAL PROJECT	SHEET No.	TOTAL SHEETS
11	SD	5/56	52.6/56.0, R0.0/R4.1		

REGISTERED CIVIL ENGINEER DATE

PLANS APPROVAL DATE

REGISTERED PROFESSIONAL ENGINEER No. Exp. CIVIL STATE OF CALIFORNIA

THE STATE OF CALIFORNIA OR ITS OFFICERS OR AGENTS SHALL NOT BE RESPONSIBLE FOR THE ACCURACY OR COMPLETENESS OF ELECTRONIC COPIES OF THIS PLAN SHEET.

Dokken Engineering
5675 Ruffin Road
Suite 250
San Diego, CA 92123

Caltrans Metric

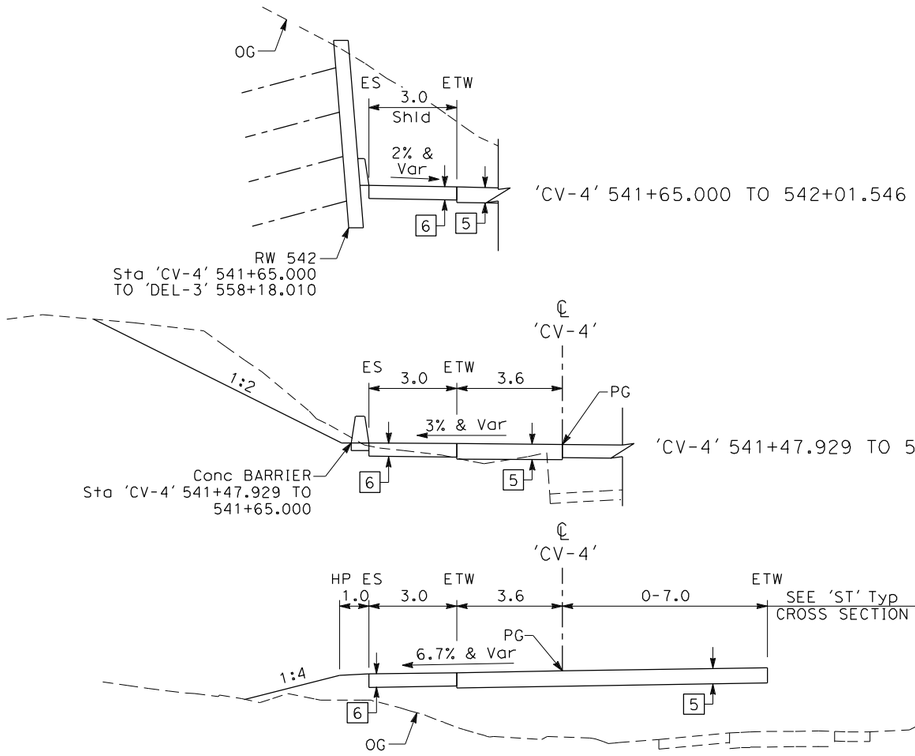

CARMEL VALLEY ROAD SB OFF-RAMP
'CV-4' 541+21.225 TO 542+01.546

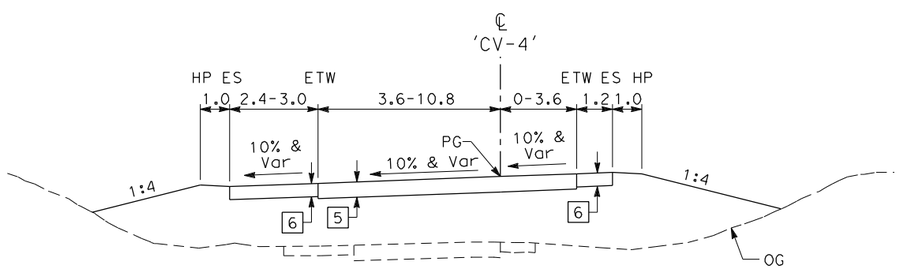

CARMEL VALLEY ROAD SB OFF-RAMP
'CV-4' 539+80.612 TO 541+21.225

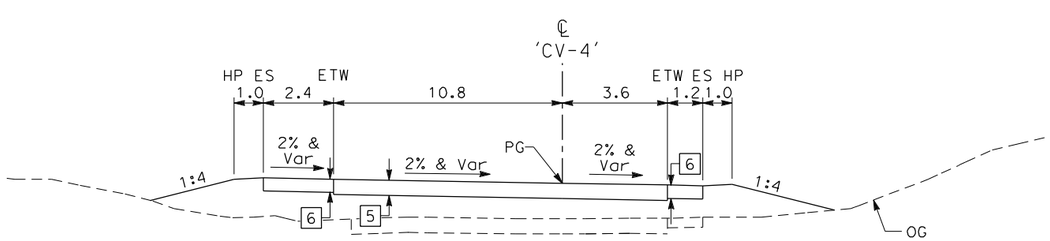

CARMEL VALLEY ROAD SB OFF-RAMP
'CV-4' 539+02.126 TO 539+80.612

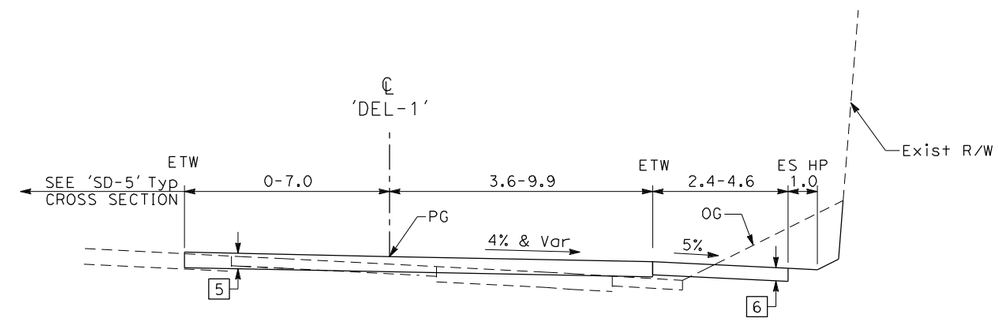

DEL MAR HEIGHTS NB ON-RAMP
'DEL-1' 561+30.642 TO 563+20

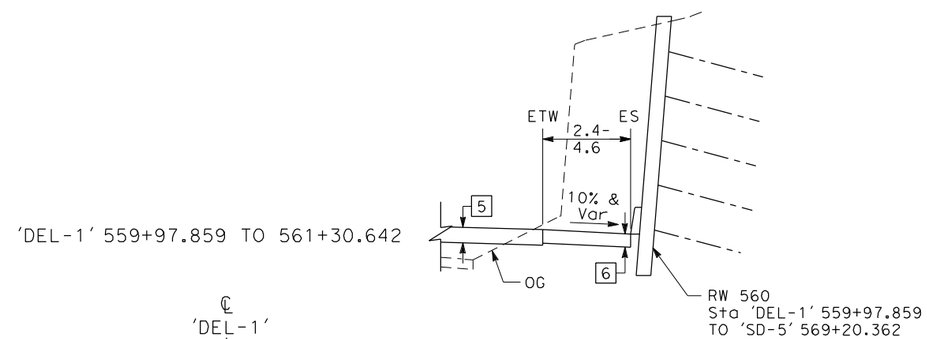

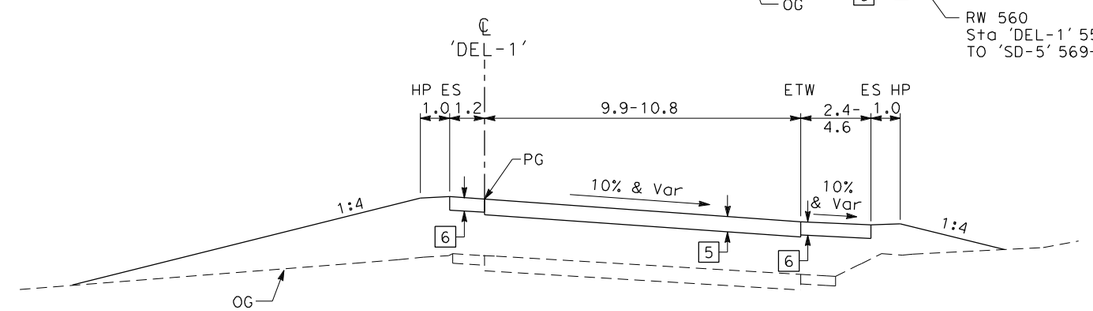

DEL MAR HEIGHTS NB ON-RAMP
'DEL-1' 559+40.244 TO 561+30.642

ALTERNATIVE 2
TYPICAL CROSS SECTIONS
NO SCALE

X-2

ALL DIMENSIONS ARE IN
METERS UNLESS OTHERWISE SHOWN

REVISED BY | DATE REVISED
CALCULATED-DESIGNED BY | CHECKED BY
CONSULTANT FUNCTIONAL SUPERVISOR

STATE OF CALIFORNIA - DEPARTMENT OF TRANSPORTATION
Caltrans

LAST REVISION 00-00-00 | DATE PLOTTED => 3/30/2012 | TIME PLOTTED => 1:01:09 PM

Dist	COUNTY	ROUTE	KILOMETER POST TOTAL PROJECT	SHEET No.	TOTAL SHEETS
11	SD	5/56	52.6/56.0, R0.0/R4.1		

REGISTERED CIVIL ENGINEER DATE

PLANS APPROVAL DATE

REGISTERED PROFESSIONAL ENGINEER No. Exp. CIVIL STATE OF CALIFORNIA

THE STATE OF CALIFORNIA OR ITS OFFICERS OR AGENTS SHALL NOT BE RESPONSIBLE FOR THE ACCURACY OR COMPLETENESS OF ELECTRONIC COPIES OF THIS PLAN SHEET.

Dokken Engineering
5675 Ruffin Road
Suite 250
San Diego, CA 92123

Caltrans Metric

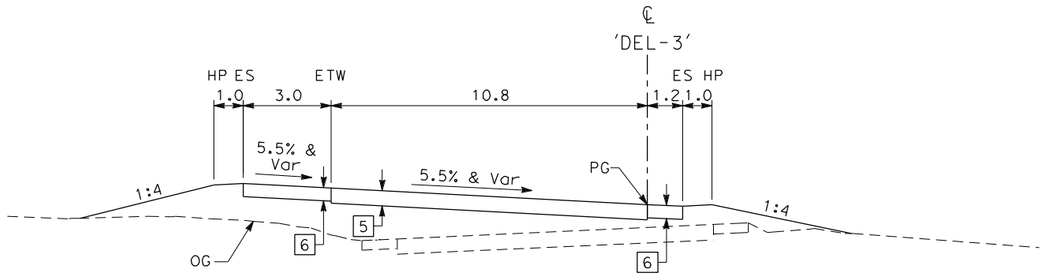

DEL MAR HEIGHTS SB ON-RAMP
'DEL-3' 558+03.818 TO 558+34.177

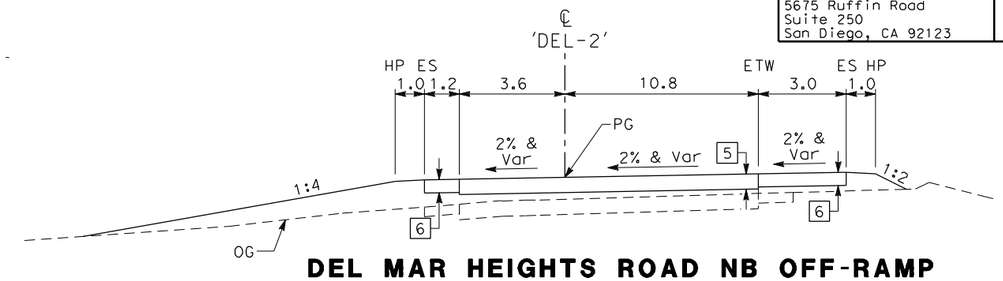

DEL MAR HEIGHTS ROAD NB OFF-RAMP
'DEL-2' 558+36.115 TO 558+90.076

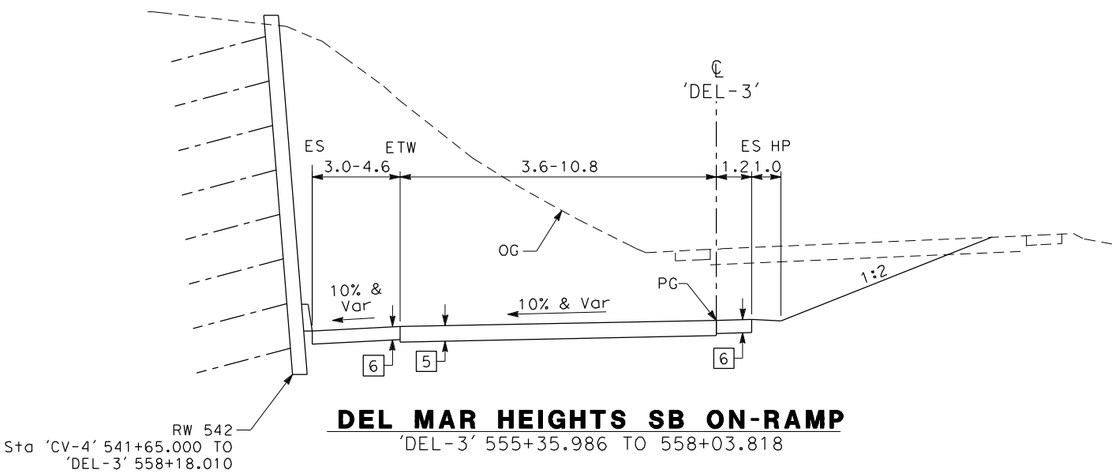

DEL MAR HEIGHTS SB ON-RAMP
'DEL-3' 555+35.986 TO 558+03.818

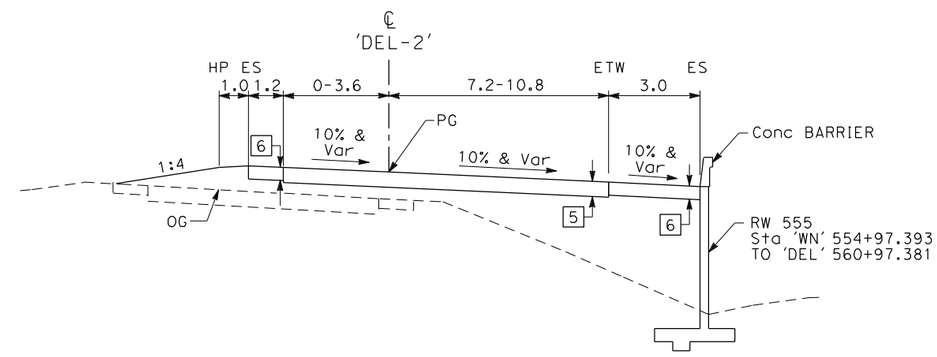

DEL MAR HEIGHTS ROAD NB OFF-RAMP
'DEL-2' 556+22.300 TO 558+36.115

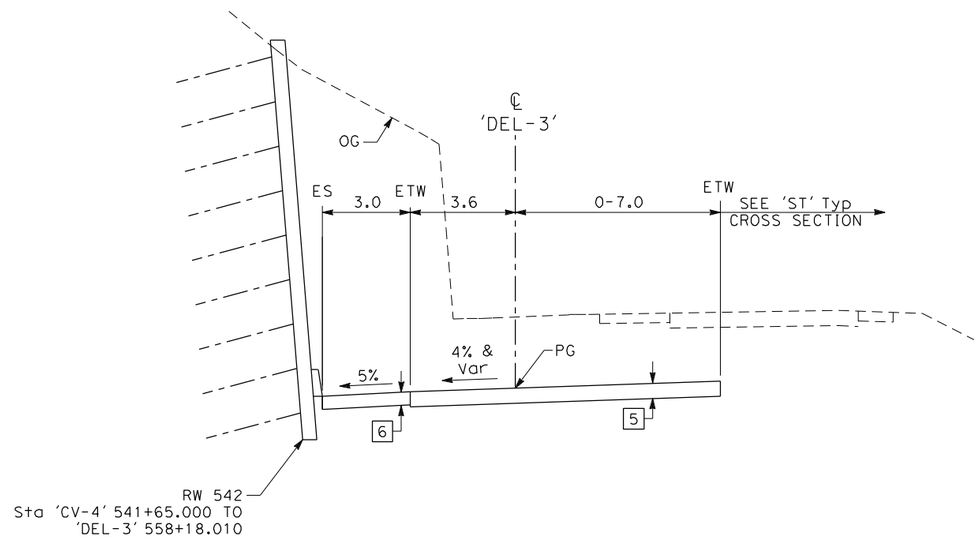

DEL MAR HEIGHTS SB ON-RAMP
'DEL-3' 553+46.629 TO 555+35.986

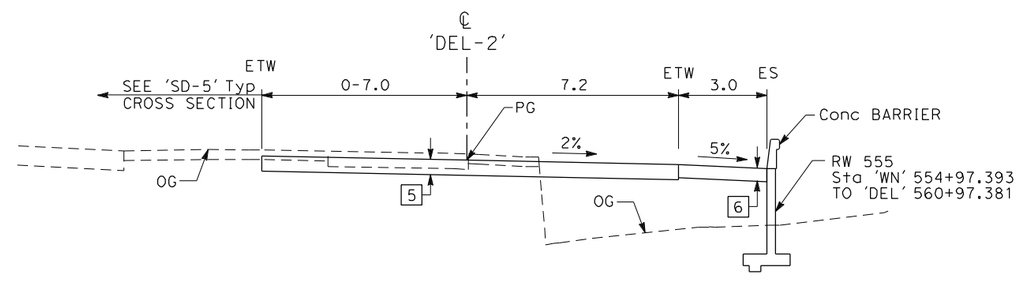

DEL MAR HEIGHTS ROAD NB OFF-RAMP
'DEL-2' 555+40 TO 556+22.300

ALTERNATIVE 2
TYPICAL CROSS SECTIONS
NO SCALE

ALL DIMENSIONS ARE IN METERS UNLESS OTHERWISE SHOWN

X-3

STATE OF CALIFORNIA - DEPARTMENT OF TRANSPORTATION
Caltrans

CONSULTANT FUNCTIONAL SUPERVISOR | CALCULATED-DESIGNED BY | CHECKED BY | REVISED BY | DATE REVISED

LAST REVISION 00-00-00 | DATE PLOTTED => 3/30/2012 | TIME PLOTTED => 1:01:11 PM

Dist	COUNTY	ROUTE	KILOMETER POST TOTAL PROJECT	SHEET No.	TOTAL SHEETS
11	SD	5/56	52.6/56.0, R0.0/R4.1		

REGISTERED CIVIL ENGINEER DATE

PLANS APPROVAL DATE

REGISTERED PROFESSIONAL ENGINEER No. Exp. CIVIL STATE OF CALIFORNIA

THE STATE OF CALIFORNIA OR ITS OFFICERS OR AGENTS SHALL NOT BE RESPONSIBLE FOR THE ACCURACY OR COMPLETENESS OF ELECTRONIC COPIES OF THIS PLAN SHEET.

Dokken Engineering
5675 Ruffin Road
Suite 250
San Diego, CA 92123

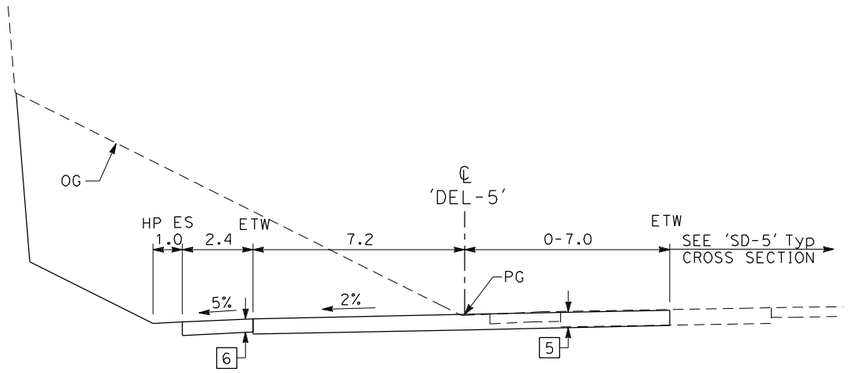

DEL MAR HEIGHTS SB OFF-RAMP
'DEL-5' 562+64.739 TO 563+47.037

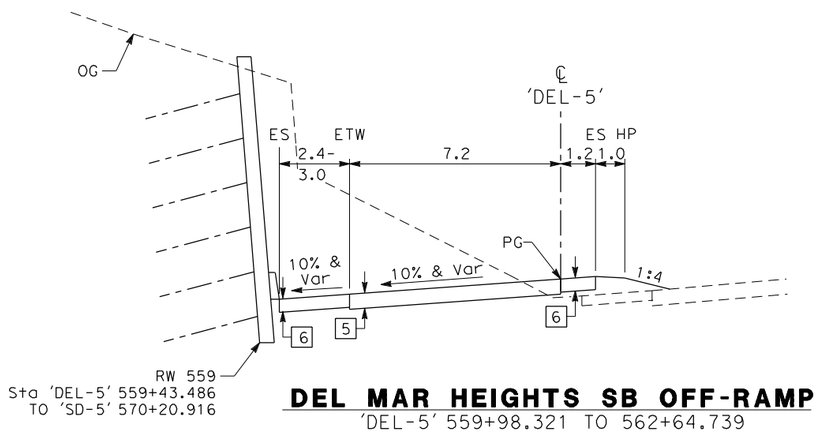

DEL MAR HEIGHTS SB OFF-RAMP
'DEL-5' 559+98.321 TO 562+64.739

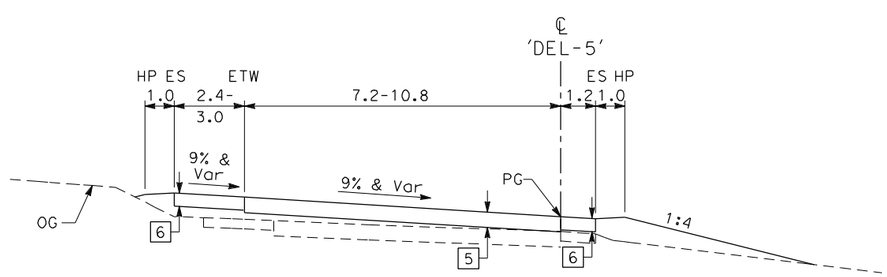

DEL MAR HEIGHTS SB OFF-RAMP
'DEL-5' 558+52.621 TO 559+98.321

'DEL-4' 560+45.696 TO 561+09.485

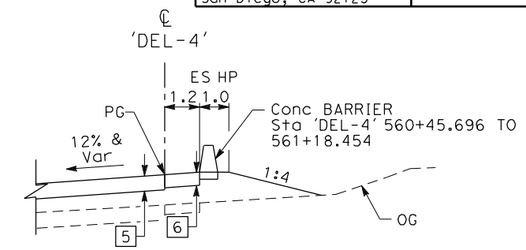

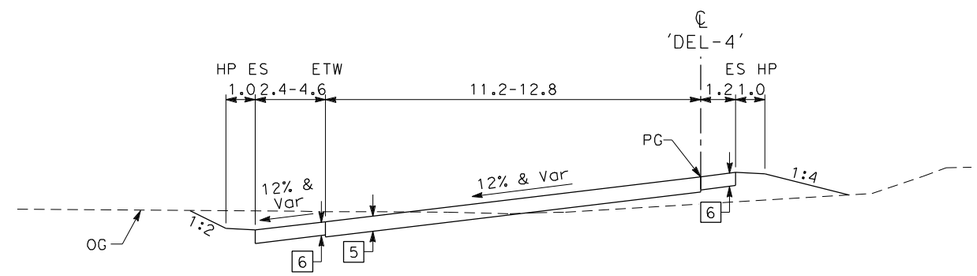

DEL MAR HEIGHTS SB LOOP ON-RAMP
'DEL-4' 558+69.358 TO 561+09.485

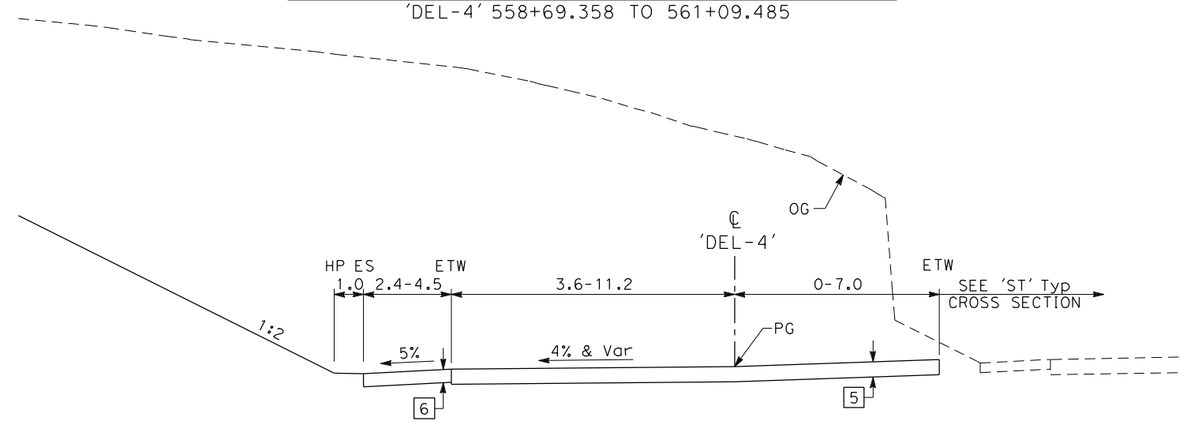

DEL MAR HEIGHTS SB LOOP ON-RAMP
'DEL-4' 556+80 TO 558+69.358

ALTERNATIVE 2
TYPICAL CROSS SECTIONS
NO SCALE

X-4

ALL DIMENSIONS ARE IN METERS UNLESS OTHERWISE SHOWN

STATE OF CALIFORNIA - DEPARTMENT OF TRANSPORTATION
Caltrans

CONSULTANT FUNCTIONAL SUPERVISOR | CALCULATED-DESIGNED BY | CHECKED BY | REVISED BY | DATE REVISED

LAST REVISION 00-00-00 | DATE PLOTTED => 3/30/2012 | TIME PLOTTED => 1:01:12 PM

Dist	COUNTY	ROUTE	KILOMETER POST TOTAL PROJECT	SHEET No.	TOTAL SHEETS
11	SD	5/56	52.6/56.0, R0.0/R4.1		

REGISTERED CIVIL ENGINEER DATE

PLANS APPROVAL DATE

REGISTERED PROFESSIONAL ENGINEER No. Exp. CIVIL STATE OF CALIFORNIA

THE STATE OF CALIFORNIA OR ITS OFFICERS OR AGENTS SHALL NOT BE RESPONSIBLE FOR THE ACCURACY OR COMPLETENESS OF ELECTRONIC COPIES OF THIS PLAN SHEET.

Dokken Engineering
5675 Ruffin Road
Suite 250
San Diego, CA 92123

Caltrans Metric

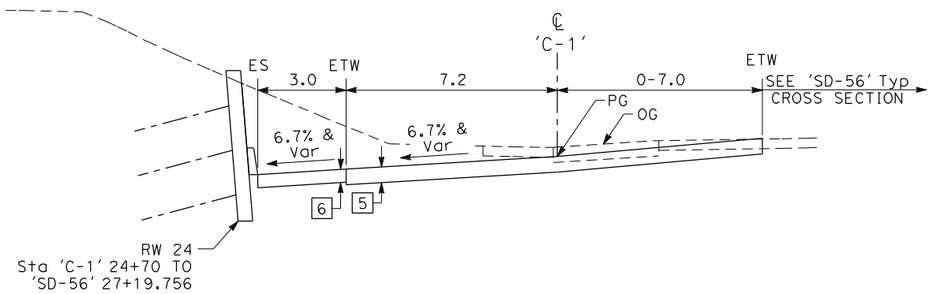

CARMEL CREEK ROAD WB OFF-RAMP

'C-1' 26+35.728 TO 27+17.948

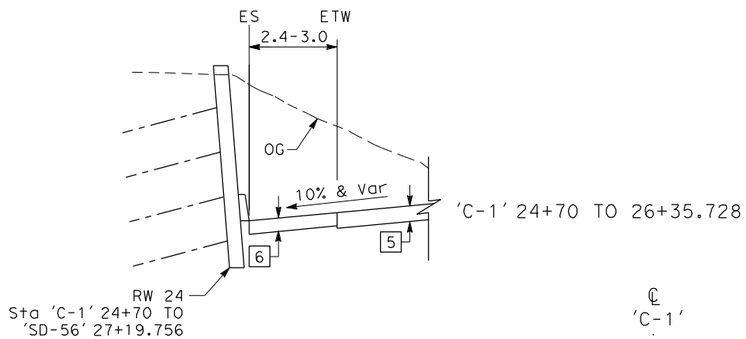

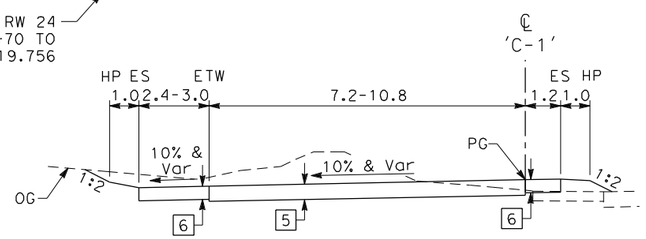

CARMEL CREEK ROAD WB OFF-RAMP

'C-1' 24+42.312 TO 26+35.728

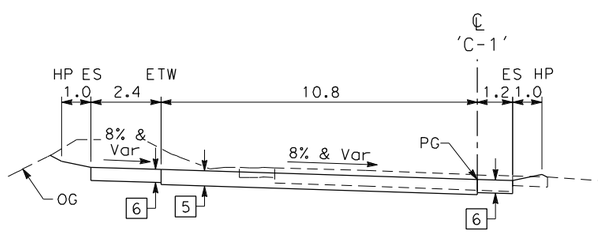

CARMEL CREEK ROAD WB OFF-RAMP

'C-1' 23+11.769 TO 24+42.312

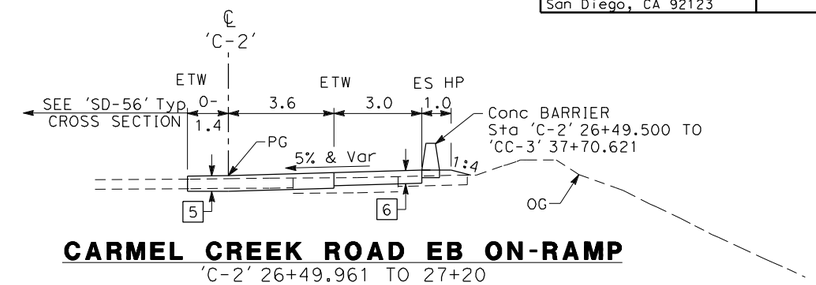

CARMEL CREEK ROAD EB ON-RAMP

'C-2' 26+49.961 TO 27+20

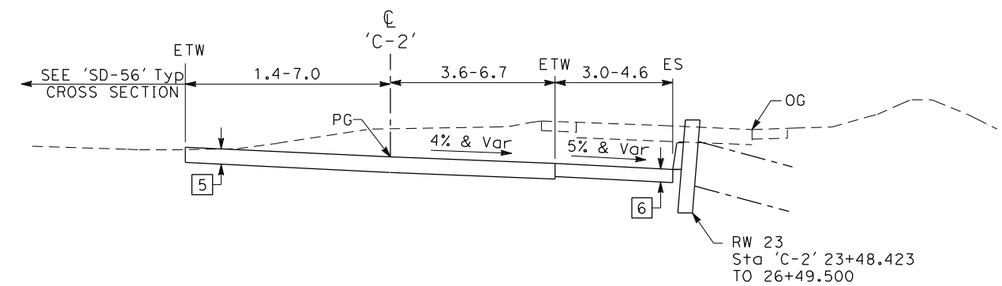

CARMEL CREEK ROAD EB ON-RAMP

'C-2' 25+37.935 TO 26+49.961

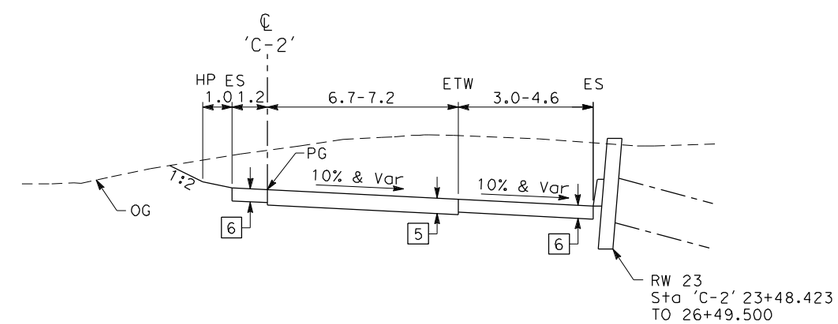

CARMEL CREEK ROAD EB ON-RAMP

'C-2' 23+48.280 TO 25+37.935

ALTERNATIVE 2
TYPICAL CROSS SECTIONS

NO SCALE

X-5

ALL DIMENSIONS ARE IN METERS UNLESS OTHERWISE SHOWN

REVISED BY | DATE REVISED

CALCULATED-DESIGNED BY | CHECKED BY

CONSULTANT FUNCTIONAL SUPERVISOR

STATE OF CALIFORNIA - DEPARTMENT OF TRANSPORTATION

Caltrans

LAST REVISION 00-00-00 | DATE PLOTTED => 3/30/2012 | TIME PLOTTED => 1:01:14 PM

Dist	COUNTY	ROUTE	KILOMETER POST TOTAL PROJECT	SHEET No.	TOTAL SHEETS
11	SD	5/56	52.6/56.0, R0.0/R4.1		

REGISTERED CIVIL ENGINEER DATE

PLANS APPROVAL DATE

REGISTERED PROFESSIONAL ENGINEER No. Exp. CIVIL STATE OF CALIFORNIA

THE STATE OF CALIFORNIA OR ITS OFFICERS OR AGENTS SHALL NOT BE RESPONSIBLE FOR THE ACCURACY OR COMPLETENESS OF ELECTRONIC COPIES OF THIS PLAN SHEET.

Dokken Engineering
5675 Ruffin Road
Suite 250
San Diego, CA 92123

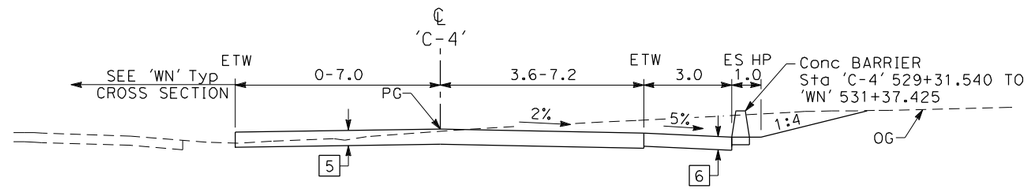

CARMEL CREEK ROAD WB LOOP ON-RAMP

'C-4' 529+58.255 TO 531+37.359

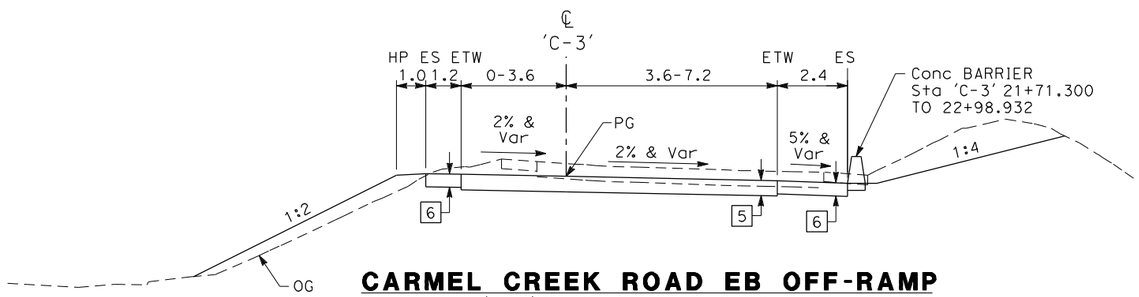

CARMEL CREEK ROAD EB OFF-RAMP

'C-3' 21+26.627 TO 22+98.932

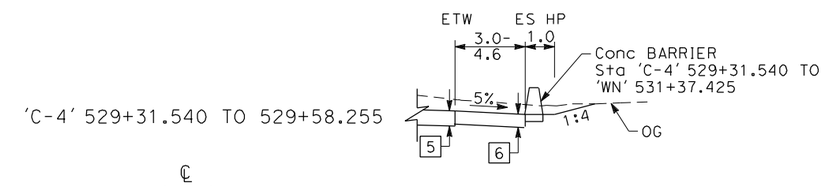

'C-4' 529+31.540 TO 529+58.255

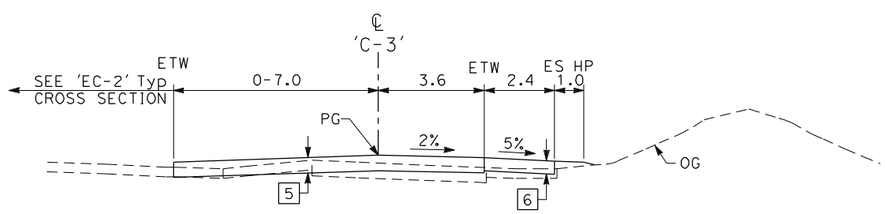

CARMEL CREEK ROAD EB OFF-RAMP

'C-3' 20+44.329 TO 21+26.627

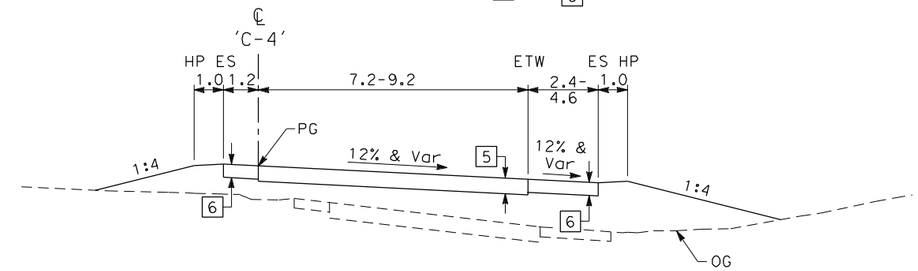

CARMEL CREEK ROAD WB LOOP ON-RAMP

'C-4' 527+41.935 TO 529+58.255

ALTERNATIVE 2
TYPICAL CROSS SECTIONS

NO SCALE

X-6

ALL DIMENSIONS ARE IN METERS UNLESS OTHERWISE SHOWN

REVISED BY	DATE REVISED

CALCULATED-DESIGNED BY

CHECKED BY

CONSULTANT FUNCTIONAL SUPERVISOR

STATE OF CALIFORNIA - DEPARTMENT OF TRANSPORTATION

Caltrans

LAST REVISION 00-00-00

DATE PLOTTED => 3/30/2012
TIME PLOTTED => 1:01:15 PM

Dist	COUNTY	ROUTE	KILOMETER POST TOTAL PROJECT	SHEET No.	TOTAL SHEETS
11	SD	5/56	52.6/56.0, R0.0/R4.1		

Caltrans Metric

REGISTERED CIVIL ENGINEER DATE

PLANS APPROVAL DATE

REGISTERED PROFESSIONAL ENGINEER No. Exp. CIVIL STATE OF CALIFORNIA

THE STATE OF CALIFORNIA OR ITS OFFICERS OR AGENTS SHALL NOT BE RESPONSIBLE FOR THE ACCURACY OR COMPLETENESS OF ELECTRONIC COPIES OF THIS PLAN SHEET.

Dokken Engineering
5675 Ruffin Road
Suite 250
San Diego, CA 92123

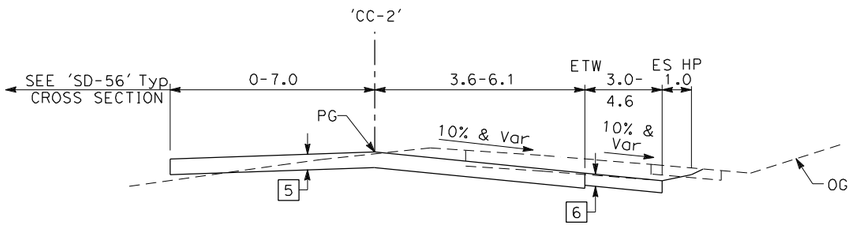

CARMEL COUNTRY ROAD EB ON-RAMP

'CC-2' 41+41.982 TO 43+17.003

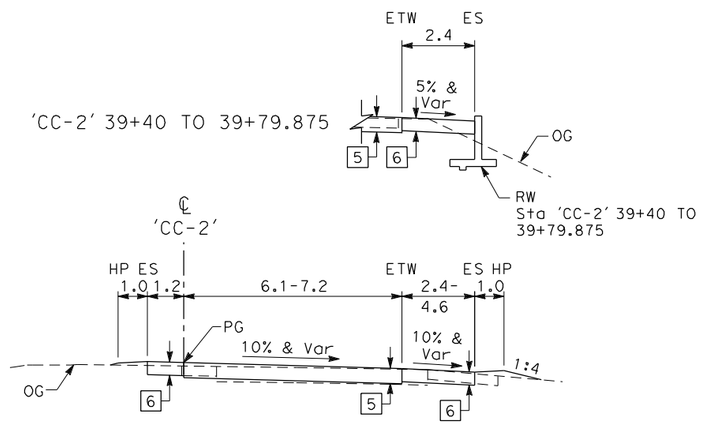

CARMEL COUNTRY ROAD EB ON-RAMP

'CC-2' 39+40 TO 41+41.982

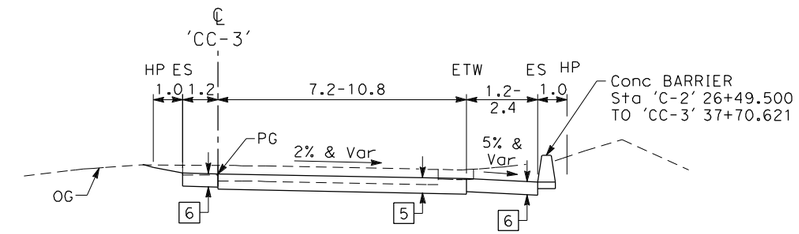

CARMEL COUNTRY ROAD EB OFF-RAMP

'CC-3' TO 36+95.360 TO 37+70.621

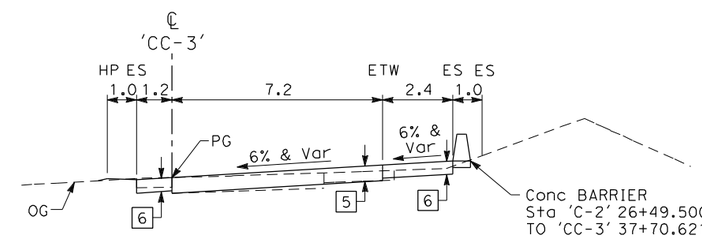

CARMEL COUNTRY ROAD EB OFF-RAMP

'CC-3' TO 36+39.051 TO 36+95.360

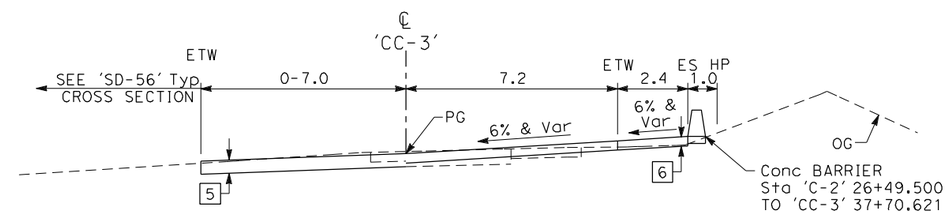

CARMEL COUNTRY ROAD EB OFF-RAMP

'CC-3' 35+56.291 TO 36+39.051

ALTERNATIVE 2
TYPICAL CROSS SECTIONS

NO SCALE

X-7

ALL DIMENSIONS ARE IN METERS UNLESS OTHERWISE SHOWN

STATE OF CALIFORNIA - DEPARTMENT OF TRANSPORTATION

Caltrans

CONSULTANT FUNCTIONAL SUPERVISOR | CALCULATED-DESIGNED BY | CHECKED BY | REVISED BY | DATE REVISED

LAST REVISION 00-00-00 | DATE PLOTTED => 3/30/2012 | TIME PLOTTED => 1:01:16 PM

Dist	COUNTY	ROUTE	KILOMETER POST TOTAL PROJECT	SHEET No.	TOTAL SHEETS
11	SD	5/56	52.6/56.0, R0.0/R4.1		

REGISTERED CIVIL ENGINEER DATE

PLANS APPROVAL DATE

REGISTERED PROFESSIONAL ENGINEER No. Exp. CIVIL STATE OF CALIFORNIA

THE STATE OF CALIFORNIA OR ITS OFFICERS OR AGENTS SHALL NOT BE RESPONSIBLE FOR THE ACCURACY OR COMPLETENESS OF ELECTRONIC COPIES OF THIS PLAN SHEET.

Dokken Engineering
5675 Ruffin Road
Suite 250
San Diego, CA 92123

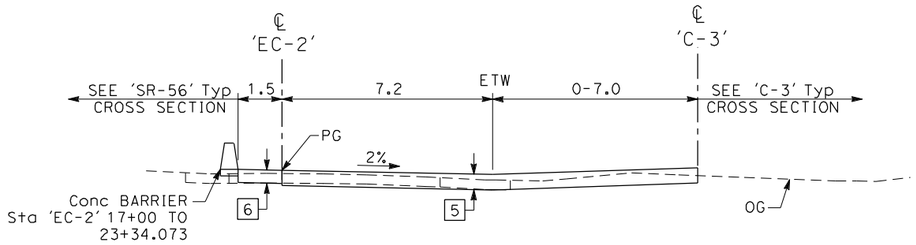

EL CAMINO REAL EB ON-RAMP
'EC-2' 20+44.329 TO 21+26.329

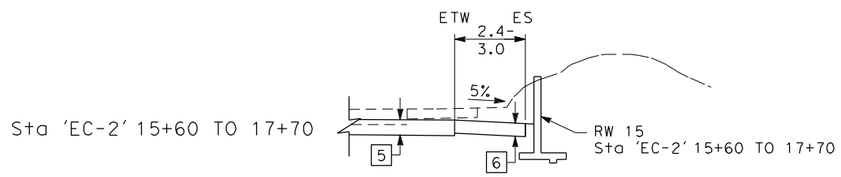

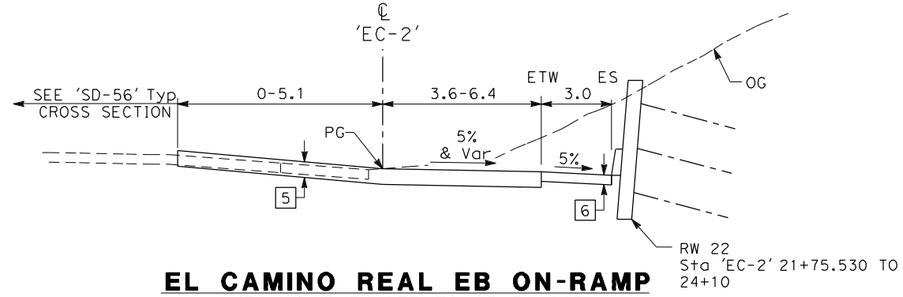

EL CAMINO REAL EB ON-RAMP
'EC-2' 23+34.073 TO 25+31.443

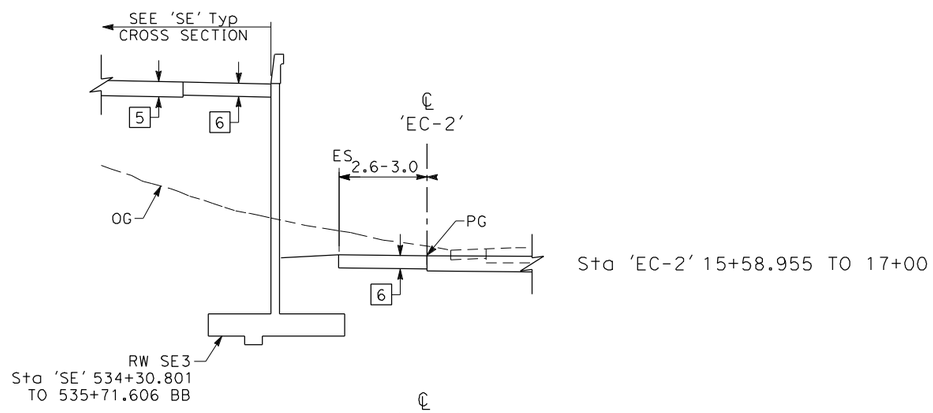

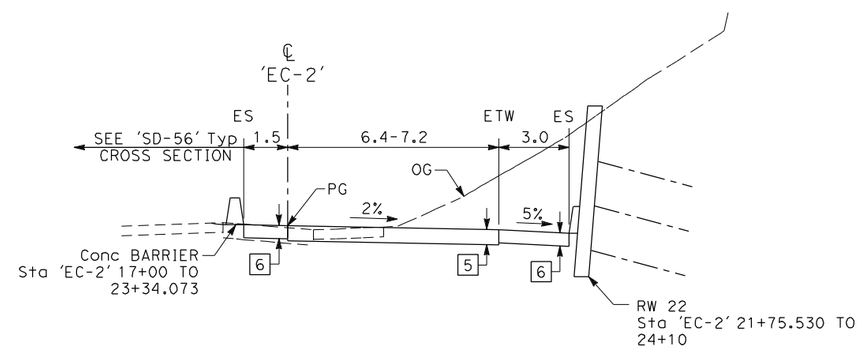

EL CAMINO REAL EB ON-RAMP
'EC-2' 21+26.329 TO 23+34.073

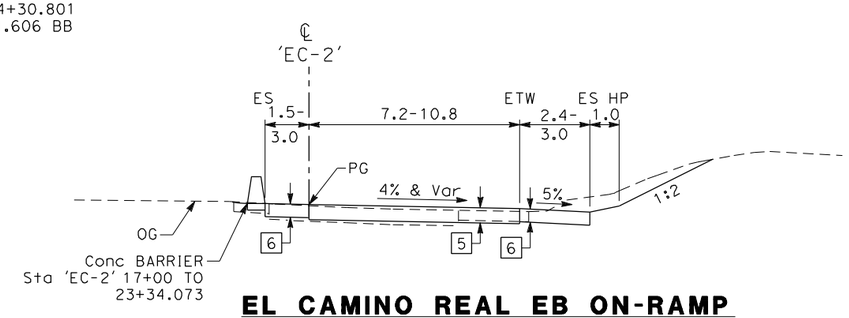

EL CAMINO REAL EB ON-RAMP
'EC-2' 15+50.721 TO 20+44.329

ALTERNATIVE 2
TYPICAL CROSS SECTIONS
NO SCALE

X-8

ALL DIMENSIONS ARE IN METERS UNLESS OTHERWISE SHOWN

STATE OF CALIFORNIA - DEPARTMENT OF TRANSPORTATION
Caltrans

CONSULTANT FUNCTIONAL SUPERVISOR | CALCULATED-DESIGNED BY | CHECKED BY | REVISED BY | DATE REVISED

LAST REVISION 00-00-00 | DATE PLOTTED => 3/30/2012 | TIME PLOTTED => 1:01:18 PM

Dist	COUNTY	ROUTE	KILOMETER POST TOTAL PROJECT	SHEET No.	TOTAL SHEETS
11	SD	5/56	52.6/56.0, R0.0/R4.1		

REGISTERED CIVIL ENGINEER DATE

PLANS APPROVAL DATE

REGISTERED PROFESSIONAL ENGINEER No. Exp. CIVIL STATE OF CALIFORNIA

THE STATE OF CALIFORNIA OR ITS OFFICERS OR AGENTS SHALL NOT BE RESPONSIBLE FOR THE ACCURACY OR COMPLETENESS OF ELECTRONIC COPIES OF THIS PLAN SHEET.

Dokken Engineering
5675 Ruffin Road
Suite 250
San Diego, CA 92123

Caltrans Metric

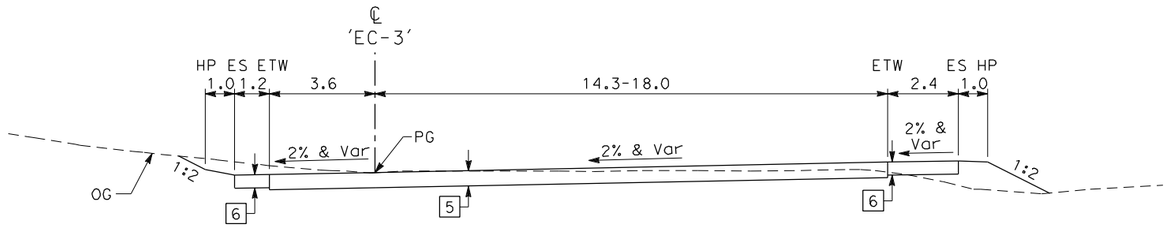

EL CAMINO REAL WB OFF-RAMP

'EC-3' 536+26.328 TO 537+00

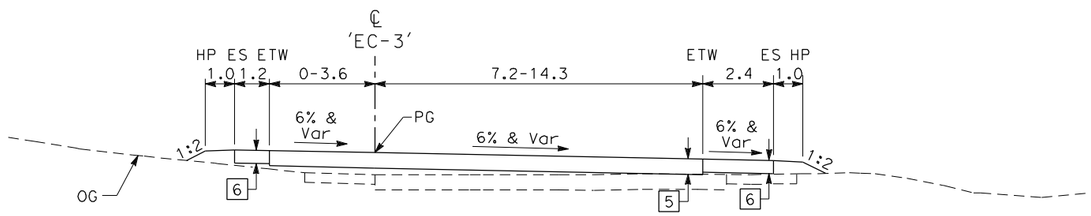

EL CAMINO REAL WB OFF-RAMP

'EC-3' 535+60.201 TO 536+26.328

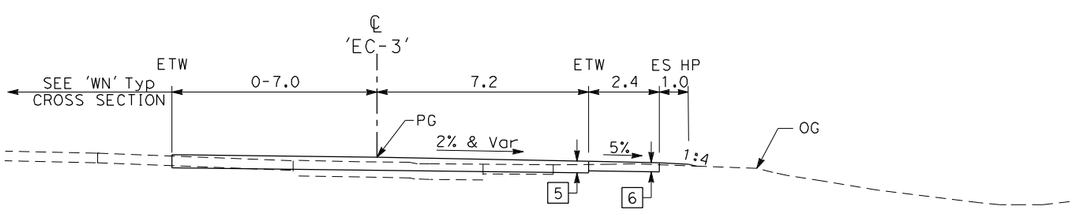

EL CAMINO REAL WB OFF-RAMP

'EC-3' 534+77.903 TO 535+60.201

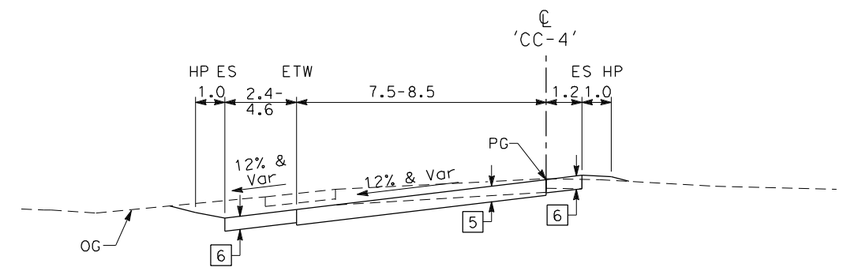

WB CARMEL COUNTRY ROAD LOOP ON-RAMP

'CC-4' 39+49.464 TO 40+83.185

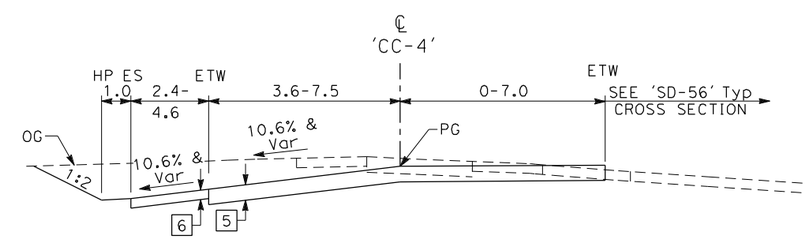

WB CARMEL COUNTRY ROAD LOOP ON-RAMP

'CC-4' 37+76.104 TO 39+49.464

ALTERNATIVE 2
TYPICAL CROSS SECTIONS
NO SCALE

ALL DIMENSIONS ARE IN METERS UNLESS OTHERWISE SHOWN

X-9

REVISED BY | DATE REVISED
CALCULATED-DESIGNED BY | CHECKED BY
CONSULTANT FUNCTIONAL SUPERVISOR

STATE OF CALIFORNIA - DEPARTMENT OF TRANSPORTATION
Caltrans

LAST REVISION 00-00-00 | DATE PLOTTED => 3/30/2012 TIME PLOTTED => 1:01:19 PM

Dist	COUNTY	ROUTE	KILOMETER POST TOTAL PROJECT	SHEET No.	TOTAL SHEETS
11	SD	5/56	52.6/56.0, R0.0/R4.1		

REGISTERED CIVIL ENGINEER DATE

PLANS APPROVAL DATE

REGISTERED PROFESSIONAL ENGINEER No. Exp. CIVIL STATE OF CALIFORNIA

THE STATE OF CALIFORNIA OR ITS OFFICERS OR AGENTS SHALL NOT BE RESPONSIBLE FOR THE ACCURACY OR COMPLETENESS OF ELECTRONIC COPIES OF THIS PLAN SHEET.

Dokken Engineering
5675 Ruffin Road
Suite 250
San Diego, CA 92123

Caltrans Metric

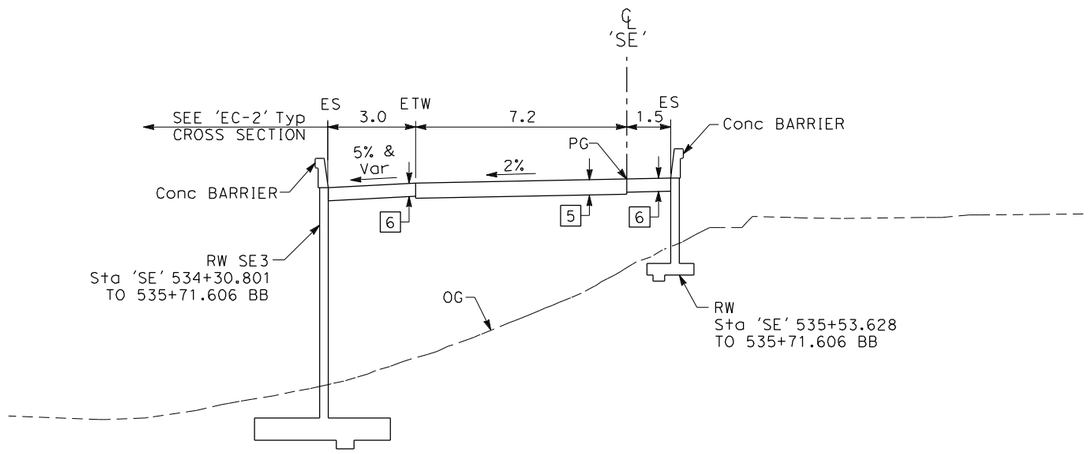

SB I-5 TO EB SR-56 DIRECT CONNECTOR
'SE' 534+93.635 TO 535+71.606 BB

*Sta 'SE' 535+71.606 BB TO 542+67 EB SEE STRUCTURAL PLANS

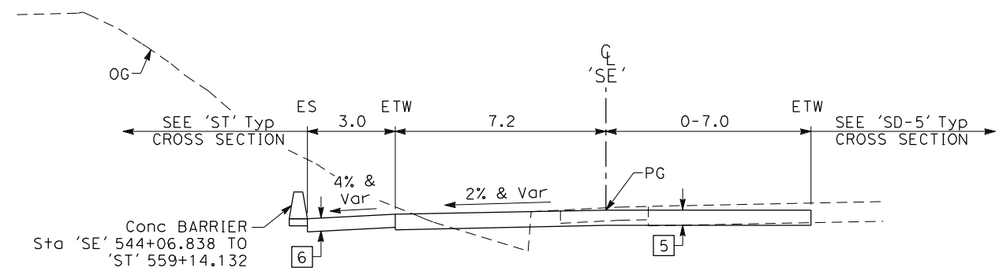

SB I-5 TO EB SR-56 DIRECT CONNECTOR
'SE' 544+06.838 TO 545+26.984

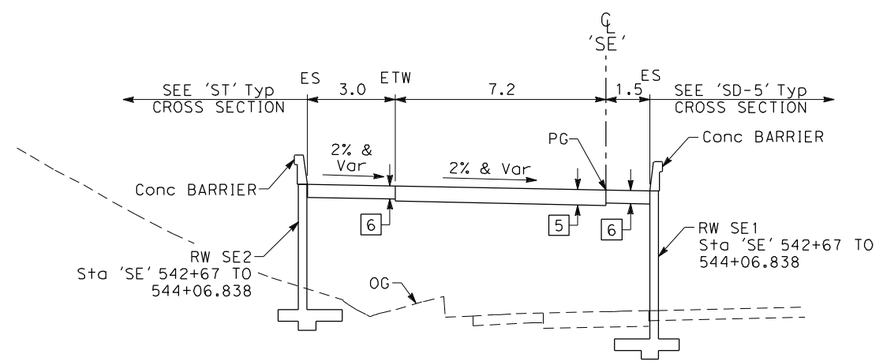

SB I-5 TO EB SR-56 DIRECT CONNECTOR
'SE' 542+67 EB TO 544+06.838

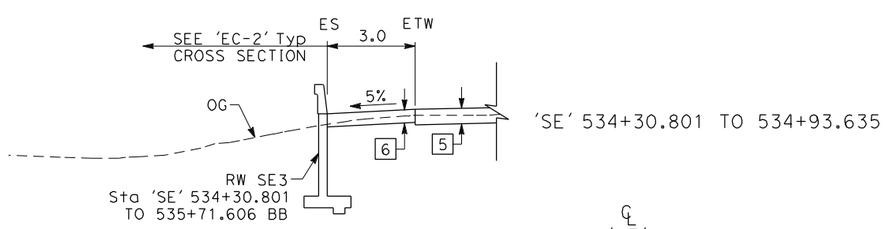

'SE' 534+30.801 TO 534+93.635

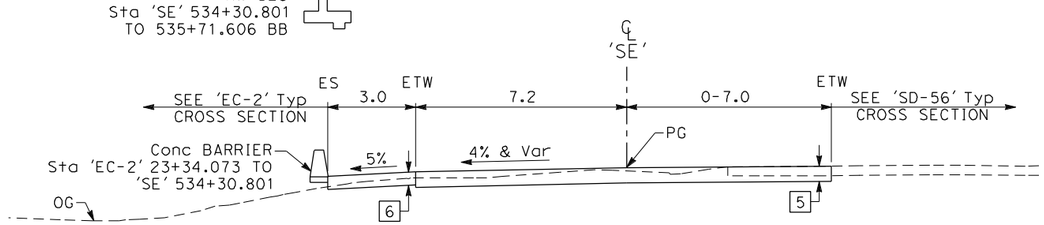

SB I-5 TO EB SR-56 DIRECT CONNECTOR
'SE' 533+04.381 TO 534+93.635

ALL DIMENSIONS ARE IN METERS UNLESS OTHERWISE SHOWN

ALTERNATIVE 2
TYPICAL CROSS SECTIONS
NO SCALE

X-10

STATE OF CALIFORNIA - DEPARTMENT OF TRANSPORTATION
Caltrans

CONSULTANT FUNCTIONAL SUPERVISOR | CALCULATED-DESIGNED BY | CHECKED BY | REVISED BY | DATE REVISED

LAST REVISION 00-00-00 | DATE PLOTTED => 3/30/2012 | TIME PLOTTED => 1:01:20 PM

Dist	COUNTY	ROUTE	KILOMETER POST TOTAL PROJECT	SHEET No.	TOTAL SHEETS
11	SD	5/56	52.6/56.0, R0.0/R4.1		

REGISTERED CIVIL ENGINEER DATE

PLANS APPROVAL DATE

REGISTERED PROFESSIONAL ENGINEER No. Exp. CIVIL STATE OF CALIFORNIA

THE STATE OF CALIFORNIA OR ITS OFFICERS OR AGENTS SHALL NOT BE RESPONSIBLE FOR THE ACCURACY OR COMPLETENESS OF ELECTRONIC COPIES OF THIS PLAN SHEET.

Dokken Engineering
5675 Ruffin Road
Suite 250
San Diego, CA 92123

Caltrans Metric

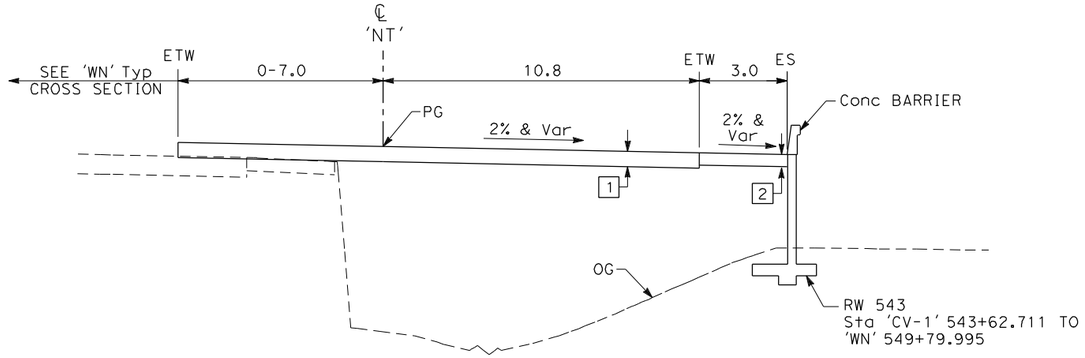

NB I-5 BYPASS
'NT' 544+39.240 TO 546+42.080

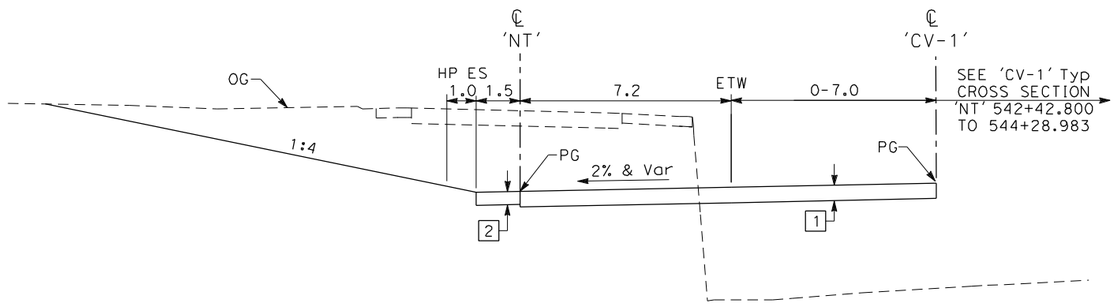

NB I-5 BYPASS
'NT' 542+42.800 TO 544+39.240

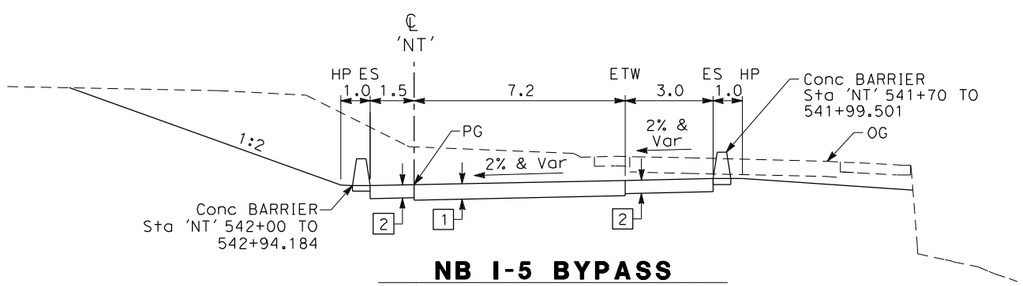

NB I-5 BYPASS
'NT' 541+92.917 TO 542+42.800

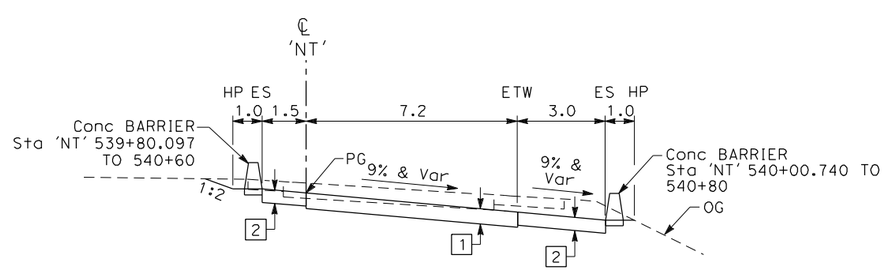

NB I-5 BYPASS
'NT' 539+80.097 TO 541+92.917

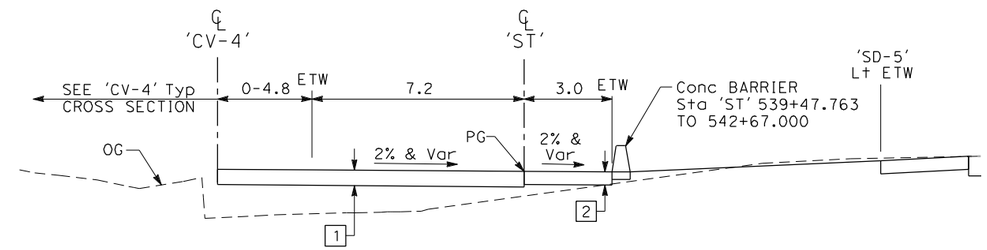

SB I-5 BYPASS
'ST' 541+46.633 TO 542+01.546

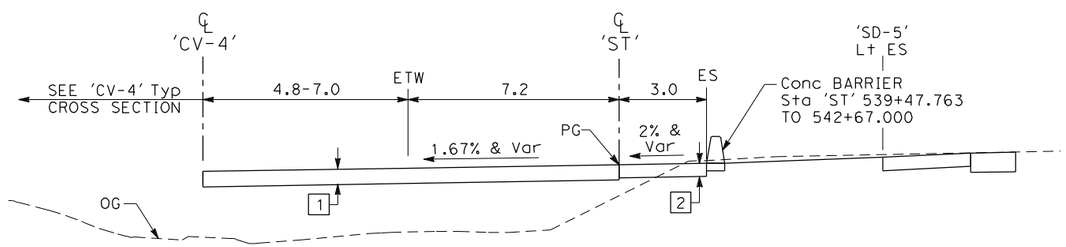

SB I-5 BYPASS
'ST' 541+21.654 TO 541+46.633

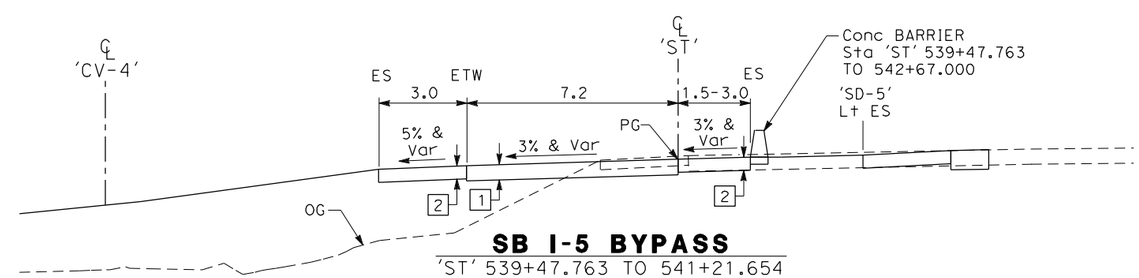

SB I-5 BYPASS
'ST' 539+47.763 TO 541+21.654

ALTERNATIVE 2
TYPICAL CROSS SECTIONS

NO SCALE

X-11

ALL DIMENSIONS ARE IN METERS UNLESS OTHERWISE SHOWN

REVISED BY | DATE REVISED
CALCULATED-DESIGNED BY | CHECKED BY
CONSULTANT FUNCTIONAL SUPERVISOR

STATE OF CALIFORNIA - DEPARTMENT OF TRANSPORTATION
Caltrans

LAST REVISION 00-00-00 | DATE PLOTTED => 3/30/2012 TIME PLOTTED => 1:01:22 PM

Dist	COUNTY	ROUTE	KILOMETER POST TOTAL PROJECT	SHEET No.	TOTAL SHEETS
11	SD	5/56	52.6/56.0, R0.0/R4.1		

REGISTERED CIVIL ENGINEER DATE

PLANS APPROVAL DATE

REGISTERED PROFESSIONAL ENGINEER No. Exp. CIVIL STATE OF CALIFORNIA

THE STATE OF CALIFORNIA OR ITS OFFICERS OR AGENTS SHALL NOT BE RESPONSIBLE FOR THE ACCURACY OR COMPLETENESS OF ELECTRONIC COPIES OF THIS PLAN SHEET.

Dokken Engineering
5675 Ruffin Road
Suite 250
San Diego, CA 92123

Caltrans Metric

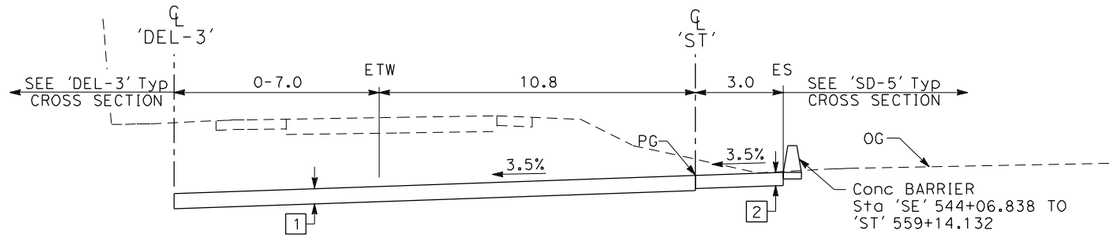

SB I-5 BYPASS
'ST' 553+46.629 TO 555+35.813

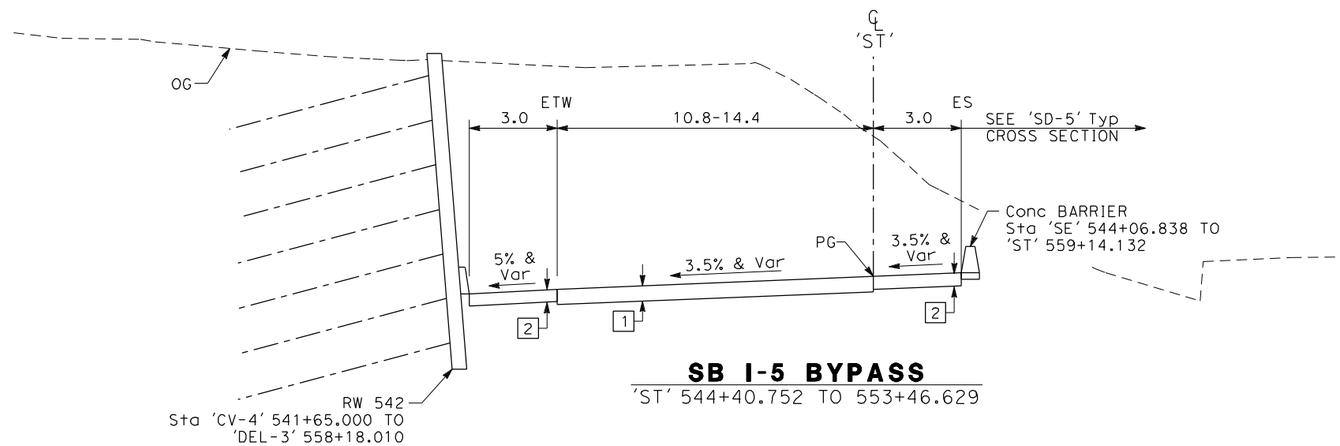

SB I-5 BYPASS
'ST' 544+40.752 TO 553+46.629

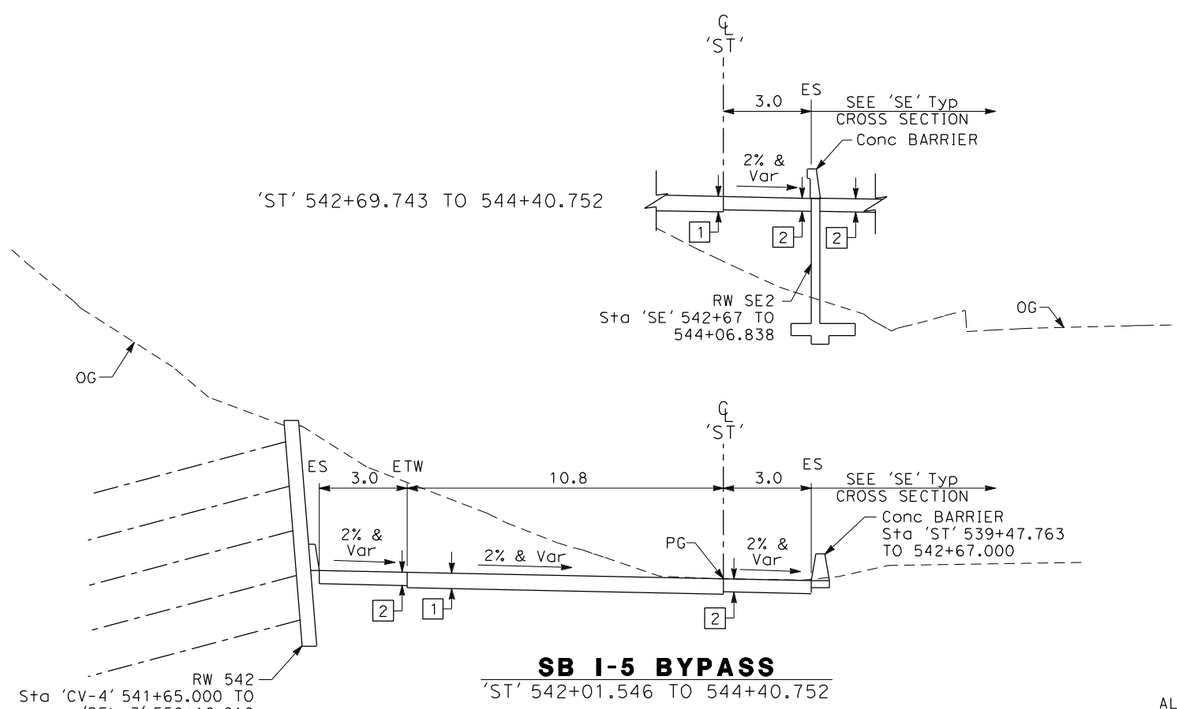

SB I-5 BYPASS
'ST' 542+01.546 TO 544+40.752

ALL DIMENSIONS ARE IN METERS UNLESS OTHERWISE SHOWN

ALTERNATIVE 2
TYPICAL CROSS SECTIONS
NO SCALE

X-12

REVISED BY	DATE REVISED

CALCULATED-DESIGNED BY	CHECKED BY

CONSULTANT FUNCTIONAL SUPERVISOR

STATE OF CALIFORNIA - DEPARTMENT OF TRANSPORTATION

Caltrans

LAST REVISION 00-00-00 | DATE PLOTTED => 3/30/2012 | TIME PLOTTED => 1:01:23 PM

Dist	COUNTY	ROUTE	KILOMETER POST TOTAL PROJECT	SHEET No.	TOTAL SHEETS
11	SD	5/56	52.6/56.0, R0.0/R4.1		

REGISTERED CIVIL ENGINEER DATE

PLANS APPROVAL DATE

REGISTERED PROFESSIONAL ENGINEER No. Exp. CIVIL STATE OF CALIFORNIA

THE STATE OF CALIFORNIA OR ITS OFFICERS OR AGENTS SHALL NOT BE RESPONSIBLE FOR THE ACCURACY OR COMPLETENESS OF ELECTRONIC COPIES OF THIS PLAN SHEET.

Dokken Engineering
5675 Ruffin Road
Suite 250
San Diego, CA 92123

Caltrans Metric

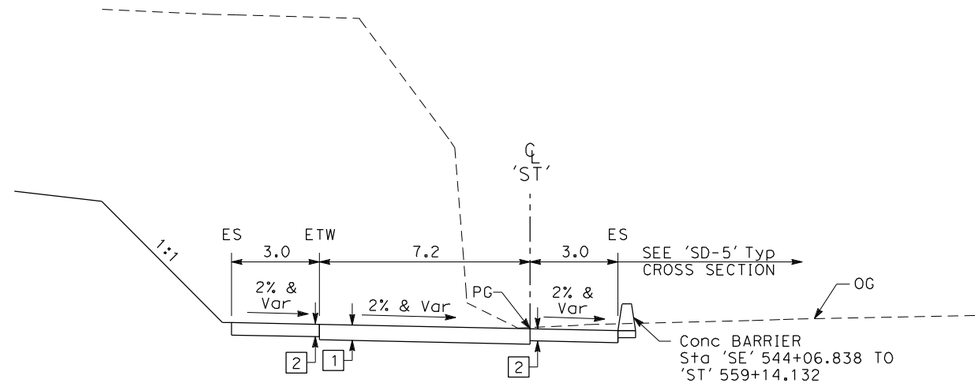

SB I-5 BYPASS
'ST' 558+69.186 TO 559+14.132

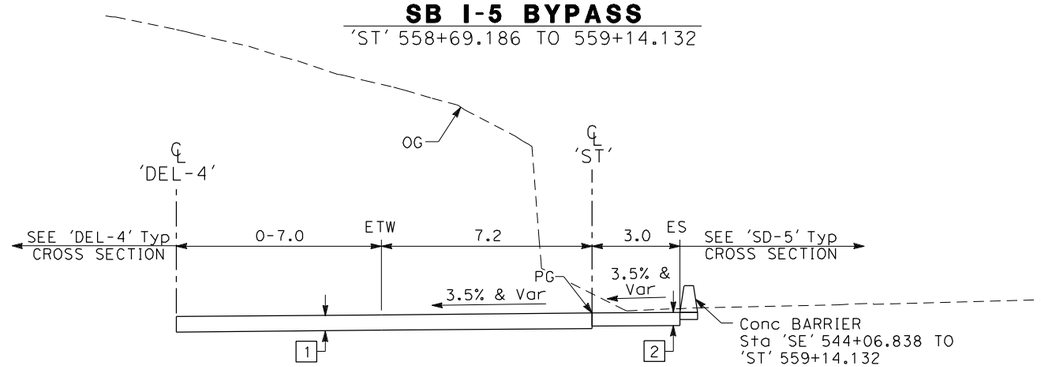

SB I-5 BYPASS
'ST' 556+80 TO 558+69.186

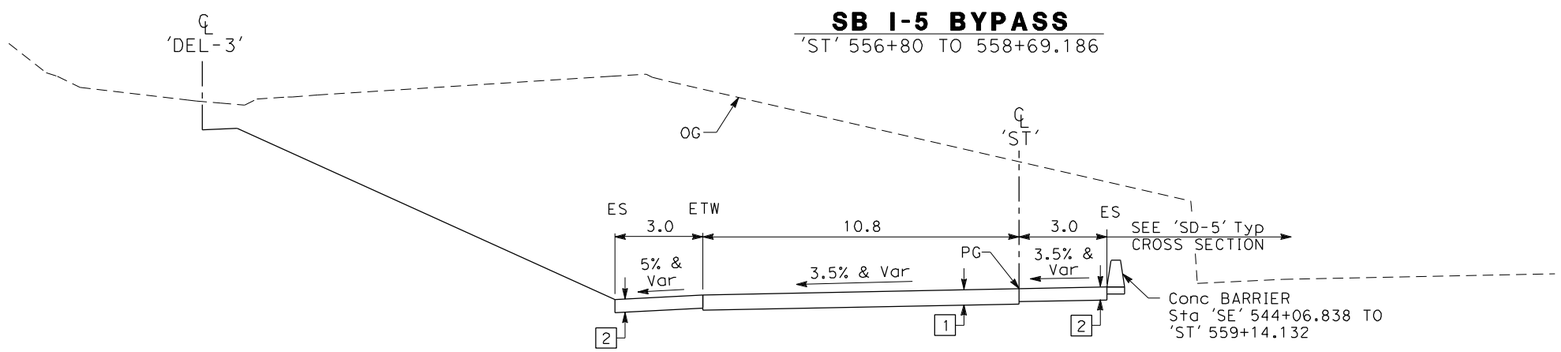

SB I-5 BYPASS
'ST' 555+35.813 TO 556+80

ALTERNATIVE 2
TYPICAL CROSS SECTIONS

NO SCALE

X-13

ALL DIMENSIONS ARE IN
METERS UNLESS OTHERWISE SHOWN

REVISED BY | DATE REVISED
CALCULATED-DESIGNED BY | CHECKED BY
CONSULTANT FUNCTIONAL SUPERVISOR

STATE OF CALIFORNIA - DEPARTMENT OF TRANSPORTATION
Caltrans

LAST REVISION 00-00-00 | DATE PLOTTED => 3/30/2012 | TIME PLOTTED => 1:01:24 PM

Dist	COUNTY	ROUTE	KILOMETER POST TOTAL PROJECT	SHEET No.	TOTAL SHEETS
11	SD	5/56	52.6/56.0, R0.0/R4.1		

REGISTERED CIVIL ENGINEER DATE

PLANS APPROVAL DATE

REGISTERED PROFESSIONAL ENGINEER No. Exp. CIVIL STATE OF CALIFORNIA

THE STATE OF CALIFORNIA OR ITS OFFICERS OR AGENTS SHALL NOT BE RESPONSIBLE FOR THE ACCURACY OR COMPLETENESS OF ELECTRONIC COPIES OF THIS PLAN SHEET.

Dokken Engineering
5675 Ruffin Road
Suite 250
San Diego, CA 92123

Caltrans Metric

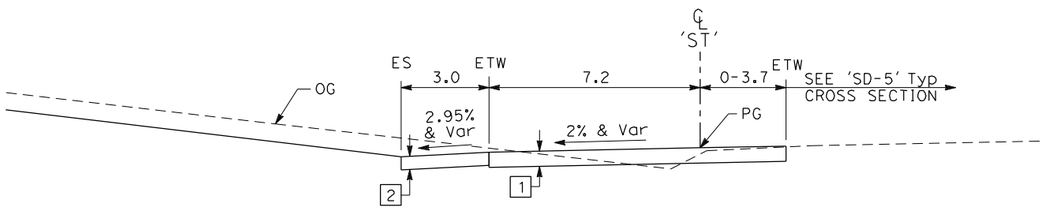

SB I-5 BYPASS
'ST' 559+83.616 TO 560+50.097

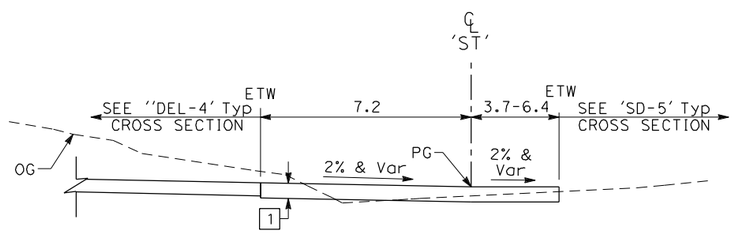

SB I-5 BYPASS
'ST' 559+14.132 TO 559+83.616

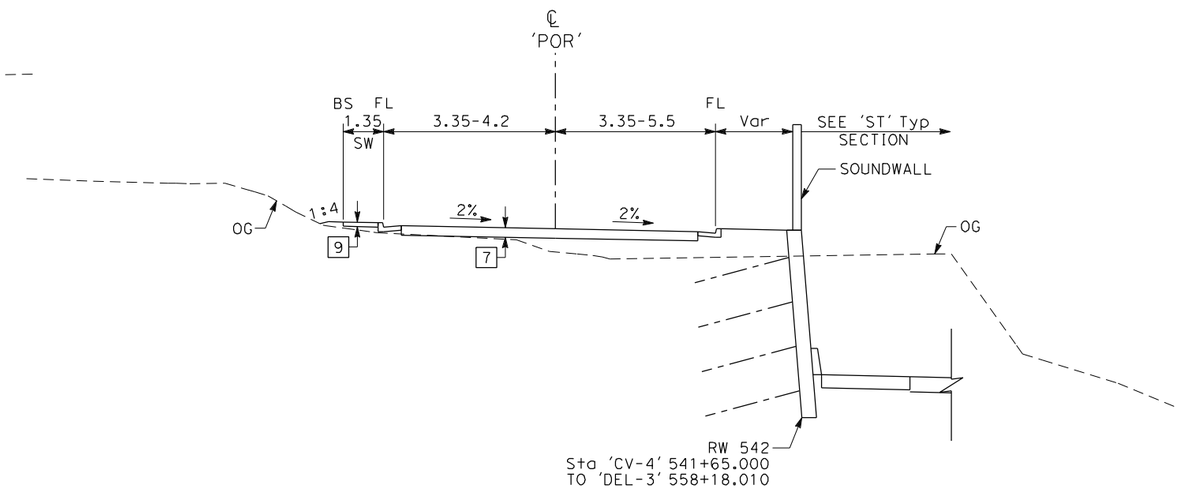

PORTOFINO CIRCLE
'POR' 542+60 TO 546+05

ALL DIMENSIONS ARE IN METERS UNLESS OTHERWISE SHOWN

ALTERNATIVE 2
TYPICAL CROSS SECTIONS
NO SCALE

X-14

REVISED BY | DATE REVISED
CALCULATED-DESIGNED BY | CHECKED BY
CONSULTANT FUNCTIONAL SUPERVISOR

STATE OF CALIFORNIA - DEPARTMENT OF TRANSPORTATION
Caltrans

LAST REVISION 00-00-00 | DATE PLOTTED => 3/30/2012 | TIME PLOTTED => 1:01:25 PM

Dist	COUNTY	ROUTE	KILOMETER POST TOTAL PROJECT	SHEET No.	TOTAL SHEETS
11	SD	5/56	52.6/56.0, R0.0/R4.1		

REGISTERED CIVIL ENGINEER DATE

PLANS APPROVAL DATE

REGISTERED PROFESSIONAL ENGINEER No. Exp. CIVIL STATE OF CALIFORNIA

THE STATE OF CALIFORNIA OR ITS OFFICERS OR AGENTS SHALL NOT BE RESPONSIBLE FOR THE ACCURACY OR COMPLETENESS OF ELECTRONIC COPIES OF THIS PLAN SHEET.

Dokken Engineering
5675 Ruffin Road
Suite 250
San Diego, CA 92123

Caltrans Metric

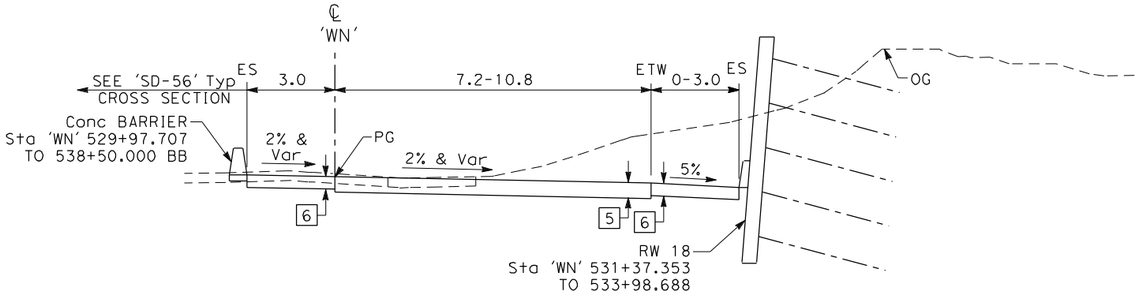

SR-56 WEST TO I-5 NORTH CONNECTOR
'WN' 531+37.359 TO 534+77.903

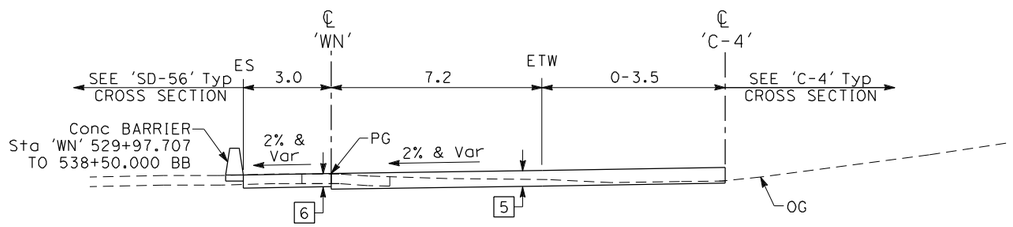

SR-56 WEST TO I-5 NORTH CONNECTOR
'WN' 529+97.707 TO 531+37.359

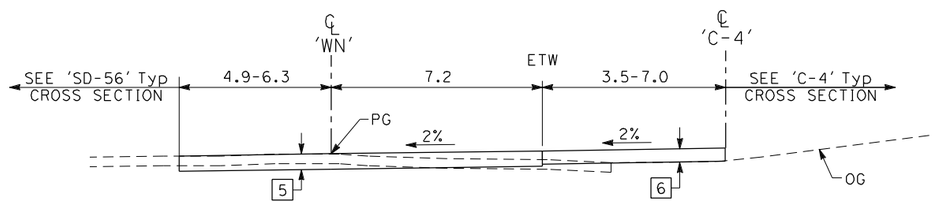

SR-56 WEST TO I-5 NORTH CONNECTOR
'WN' 529+58.566 TO 528+97.707

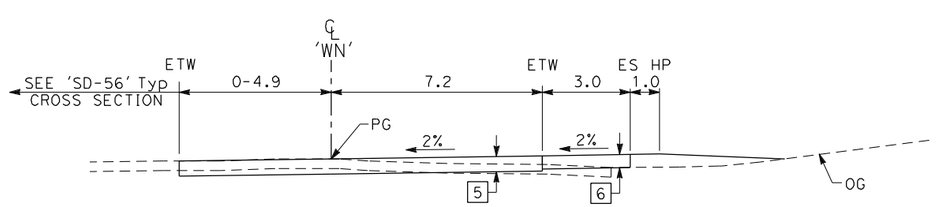

SR-56 WEST TO I-5 NORTH CONNECTOR
'WN' 528+66.292 TO 529+97.707

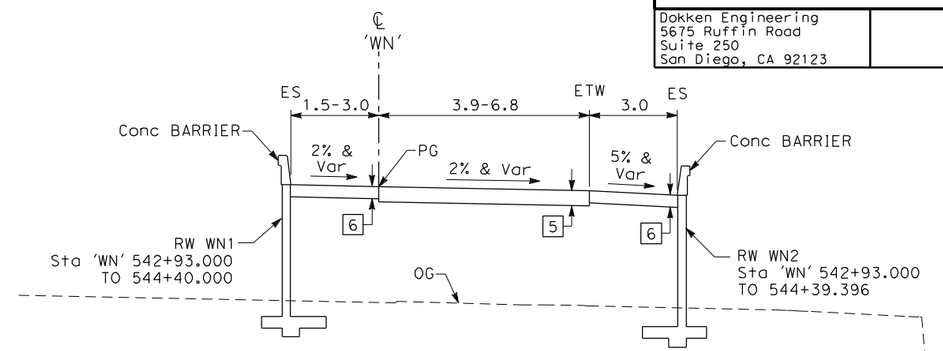

SR-56 WEST TO I-5 NORTH CONNECTOR
'WN' 542+93 TO 544+39.396

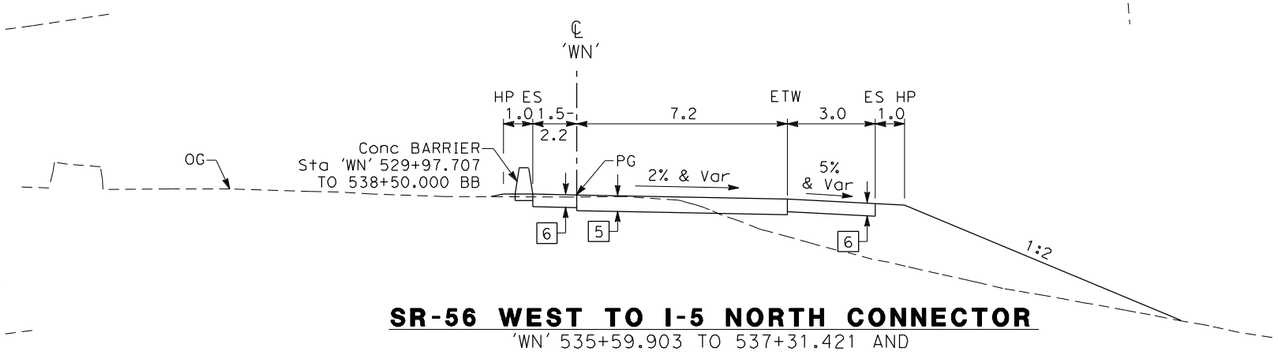

SR-56 WEST TO I-5 NORTH CONNECTOR
'WN' 535+59.903 TO 537+31.421 AND
'WN' 537+88.739 TO 538+50.000

*Sta 'WN' 537+31.421 BB TO 537+88.739 SEE STRUCTURAL PLANS
*Sta 'WN' 538+50.000 BB TO 542+93 SEE STRUCTURAL PLANS

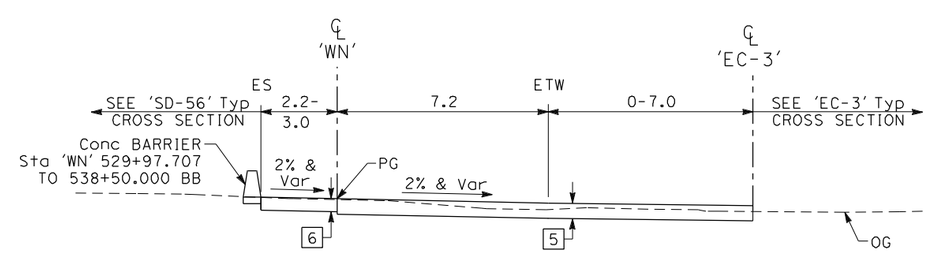

SR-56 WEST TO I-5 NORTH CONNECTOR
'WN' 534+77.903 TO 535+59.903

ALTERNATIVE 2
TYPICAL CROSS SECTIONS
NO SCALE

ALL DIMENSIONS ARE IN METERS UNLESS OTHERWISE SHOWN

X-15

REVISED BY	DATE REVISED

CALCULATED-DESIGNED BY
CHECKED BY
CONSULTANT FUNCTIONAL SUPERVISOR

STATE OF CALIFORNIA - DEPARTMENT OF TRANSPORTATION
Caltrans

LAST REVISION 00-00-00
DATE PLOTTED => 3/30/2012
TIME PLOTTED => 1:01:26 PM

Dist	COUNTY	ROUTE	KILOMETER POST TOTAL PROJECT	SHEET No.	TOTAL SHEETS
11	SD	5/56	52.6/56.0, R0.0/R4.1		

REGISTERED CIVIL ENGINEER DATE

PLANS APPROVAL DATE

REGISTERED PROFESSIONAL ENGINEER No. Exp. CIVIL STATE OF CALIFORNIA

THE STATE OF CALIFORNIA OR ITS OFFICERS OR AGENTS SHALL NOT BE RESPONSIBLE FOR THE ACCURACY OR COMPLETENESS OF ELECTRONIC COPIES OF THIS PLAN SHEET.

Dokken Engineering
5675 Ruffin Road
Suite 250
San Diego, CA 92123

Caltrans Metric

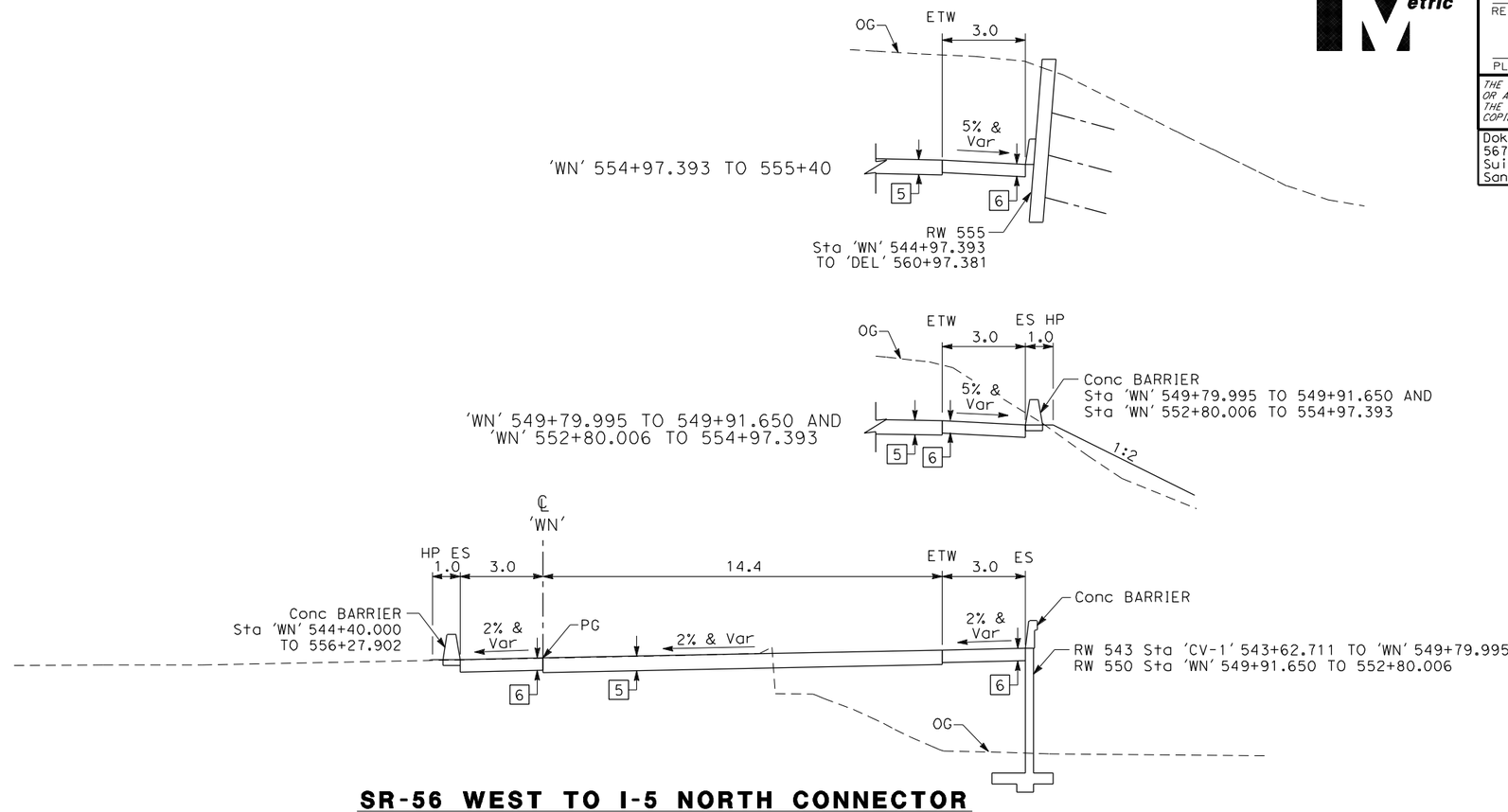

SR-56 WEST TO I-5 NORTH CONNECTOR

'WN' 546+42.080 TO 555+40

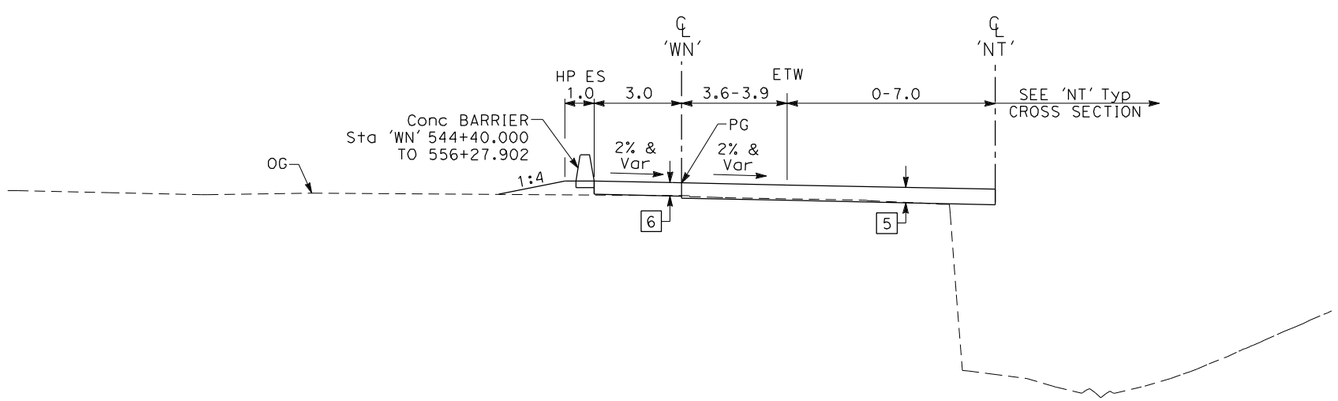

SR-56 WEST TO I-5 NORTH CONNECTOR

'WN' 544+39.396 TO 546+42.080

ALL DIMENSIONS ARE IN METERS UNLESS OTHERWISE SHOWN

ALTERNATIVE 2 TYPICAL CROSS SECTIONS

NO SCALE

X-16

REVISED BY	DATE REVISED

CALCULATED-DESIGNED BY

CHECKED BY

CONSULTANT FUNCTIONAL SUPERVISOR

STATE OF CALIFORNIA - DEPARTMENT OF TRANSPORTATION

Caltrans

LAST REVISION 00-00-00 DATE PLOTTED => 3/30/2012 TIME PLOTTED => 1:01:27 PM

Dist	COUNTY	ROUTE	KILOMETER POST TOTAL PROJECT	SHEET No.	TOTAL SHEETS
11	SD	5/56	52.6/56.0, R0.0/R4.1		

REGISTERED CIVIL ENGINEER DATE

PLANS APPROVAL DATE

REGISTERED PROFESSIONAL ENGINEER No. Exp. CIVIL STATE OF CALIFORNIA

THE STATE OF CALIFORNIA OR ITS OFFICERS OR AGENTS SHALL NOT BE RESPONSIBLE FOR THE ACCURACY OR COMPLETENESS OF ELECTRONIC COPIES OF THIS PLAN SHEET.

Dokken Engineering
5675 Ruffin Road
Suite 250
San Diego, CA 92123

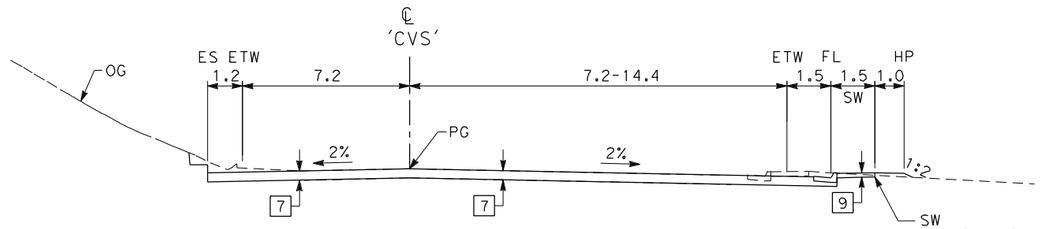

SW
Sta 'CV-2' 539+49.813 TO 'CVS' 541+87.623 AND
Sta 'CVS' 543+19.757 TO 'ECR' 9+22.714

CARMEL VALLEY ROAD SOUTH

'CVS' 541+77 TO 543+76.981

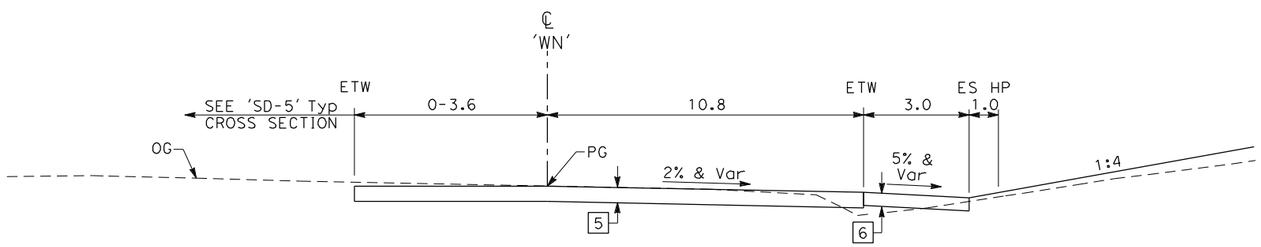

SR-56 WEST TO I-5 NORTH CONNECTOR

'WN' 556+22.002 TO 558+86.084

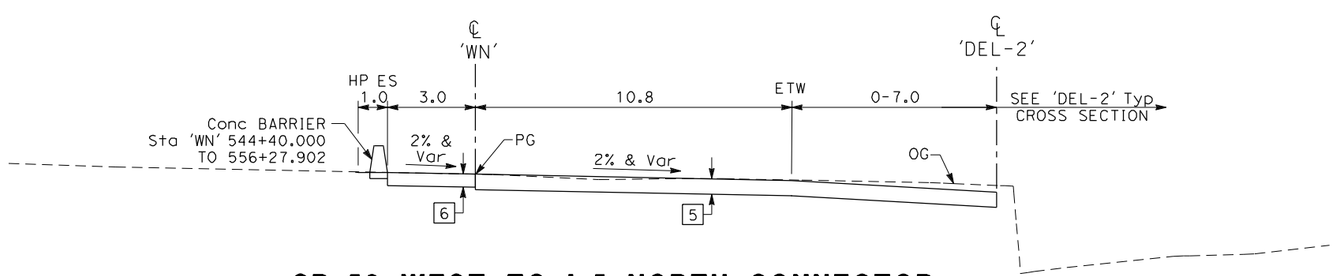

SR-56 WEST TO I-5 NORTH CONNECTOR

'WN' 555+40 TO 556+22.002

ALL DIMENSIONS ARE IN
METERS UNLESS OTHERWISE SHOWN

ALTERNATIVE 2
TYPICAL CROSS SECTIONS

NO SCALE

X-17

REVISED BY	DATE REVISED

CALCULATED-DESIGNED BY	
CHECKED BY	

CONSULTANT FUNCTIONAL SUPERVISOR

STATE OF CALIFORNIA - DEPARTMENT OF TRANSPORTATION

Caltrans

LAST REVISION 00-00-00 | DATE PLOTTED => 3/30/2012 | TIME PLOTTED => 1:01:29 PM

Dist	COUNTY	ROUTE	KILOMETER POST TOTAL PROJECT	SHEET No.	TOTAL SHEETS
11	SD	5/56	52.6/56.0, R0.0/R4.1		

REGISTERED CIVIL ENGINEER DATE

PLANS APPROVAL DATE

REGISTERED PROFESSIONAL ENGINEER No. Exp. CIVIL STATE OF CALIFORNIA

THE STATE OF CALIFORNIA OR ITS OFFICERS OR AGENTS SHALL NOT BE RESPONSIBLE FOR THE ACCURACY OR COMPLETENESS OF ELECTRONIC COPIES OF THIS PLAN SHEET.

Dokken Engineering
5675 Ruffin Road
Suite 250
San Diego, CA 92123

Caltrans Metric

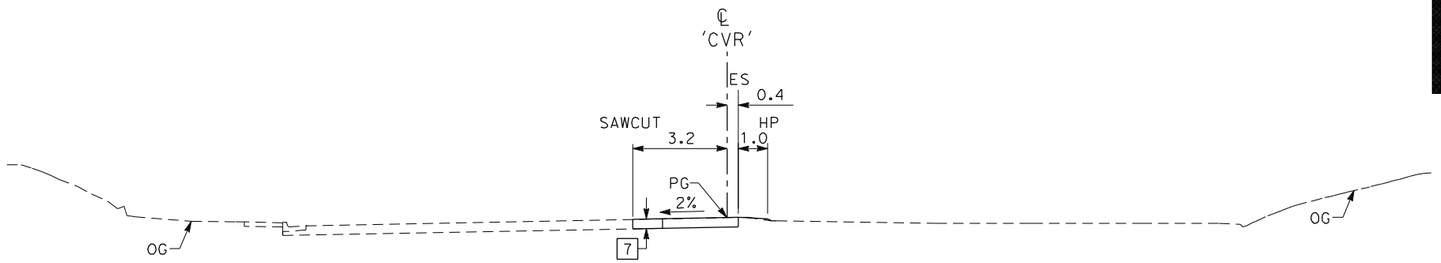

CARMEL VALLEY ROAD
'CVR' 541+77 TO 543+68.861

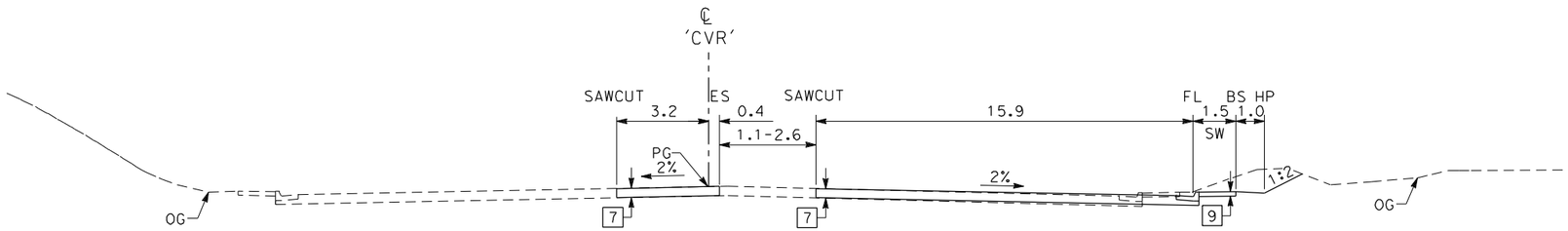

CARMEL VALLEY ROAD
'CVR' 540+89.660 TO 541+77

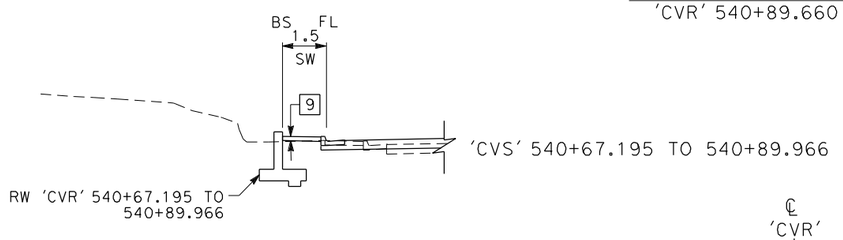

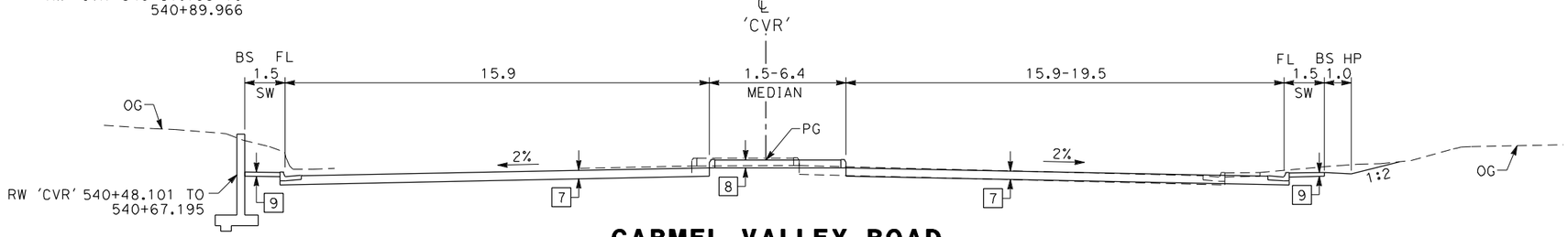

CARMEL VALLEY ROAD
'CVR' 540+09.568 TO 540+89.660

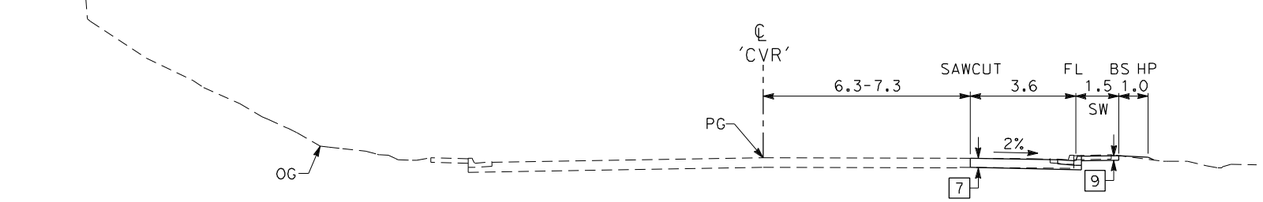

CARMEL VALLEY ROAD
'CVR' 539+73.161 TO 540+09.568

ALL DIMENSIONS ARE IN
METERS UNLESS OTHERWISE SHOWN

ALTERNATIVE 2
TYPICAL CROSS SECTIONS
NO SCALE

X-18

REVISED BY	DATE REVISED

CALCULATED-DESIGNED BY
CHECKED BY
CONSULTANT FUNCTIONAL SUPERVISOR

STATE OF CALIFORNIA - DEPARTMENT OF TRANSPORTATION
Caltrans

LAST REVISION 00-00-00
DATE PLOTTED => 3/30/2012
TIME PLOTTED => 1:01:30 PM

Dist	COUNTY	ROUTE	KILOMETER POST TOTAL PROJECT	SHEET No.	TOTAL SHEETS
11	SD	5/56	52.6/56.0, R0.0/R4.1		

REGISTERED CIVIL ENGINEER DATE

PLANS APPROVAL DATE

REGISTERED PROFESSIONAL ENGINEER No. Exp. CIVIL STATE OF CALIFORNIA

THE STATE OF CALIFORNIA OR ITS OFFICERS OR AGENTS SHALL NOT BE RESPONSIBLE FOR THE ACCURACY OR COMPLETENESS OF ELECTRONIC COPIES OF THIS PLAN SHEET.

Dokken Engineering
5675 Ruffin Road
Suite 250
San Diego, CA 92123

Caltrans Metric

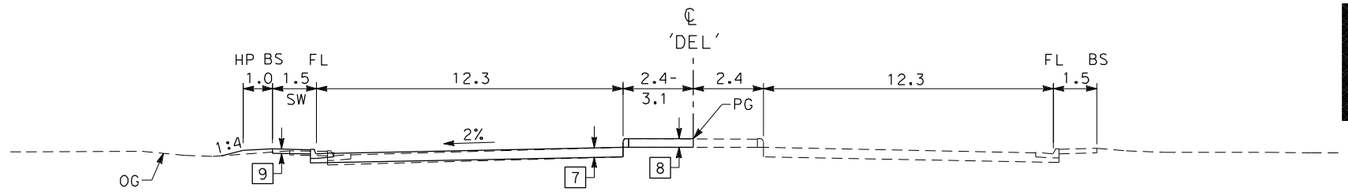

DEL MAR HEIGHTS ROAD
'DEL' 561+55 TO 561+75.244

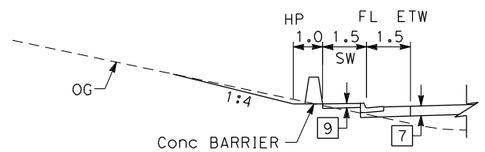

Sta 'DEL'560+33.171 TO 561+07.818

'DEL' 560+33.171 TO 561+07.818

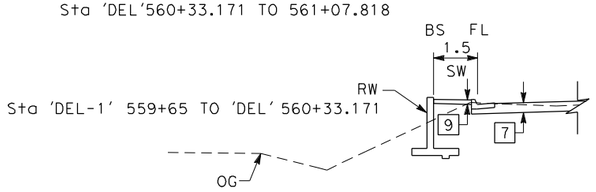

Sta 'DEL-1' 559+65 TO 'DEL' 560+33.171

Sta 'DEL' 560+03.935 TO 560+33.171

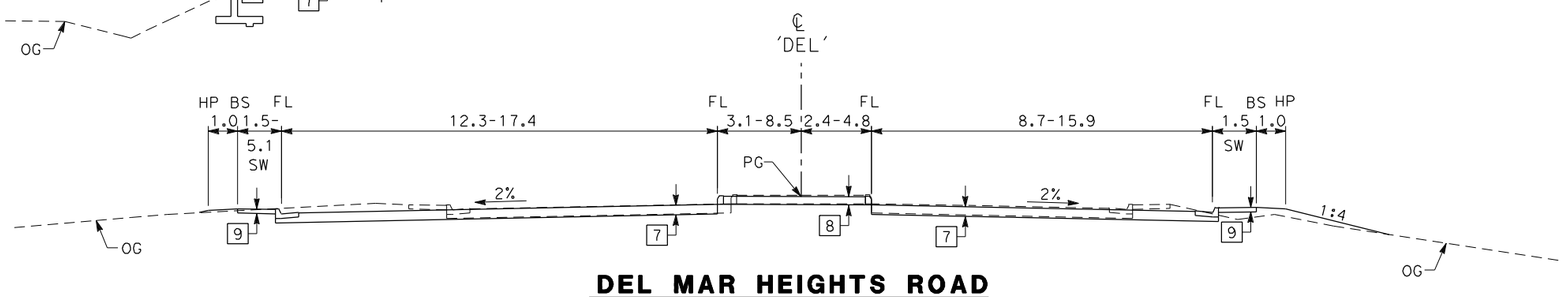

DEL MAR HEIGHTS ROAD
'DEL' 557+20 TO 561+55
*Sta 'DEL' 557+96.170 TO 559+46.222 SEE STRUCTURAL PLANS

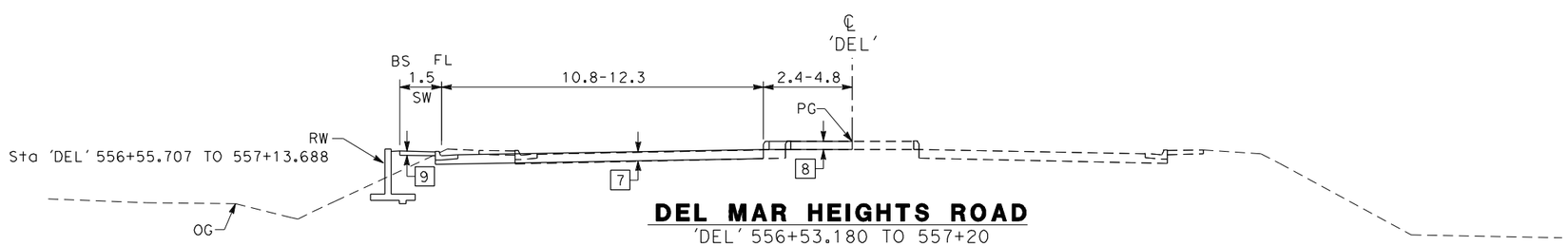

Sta 'DEL' 556+55.707 TO 557+13.688

DEL MAR HEIGHTS ROAD
'DEL' 556+53.180 TO 557+20

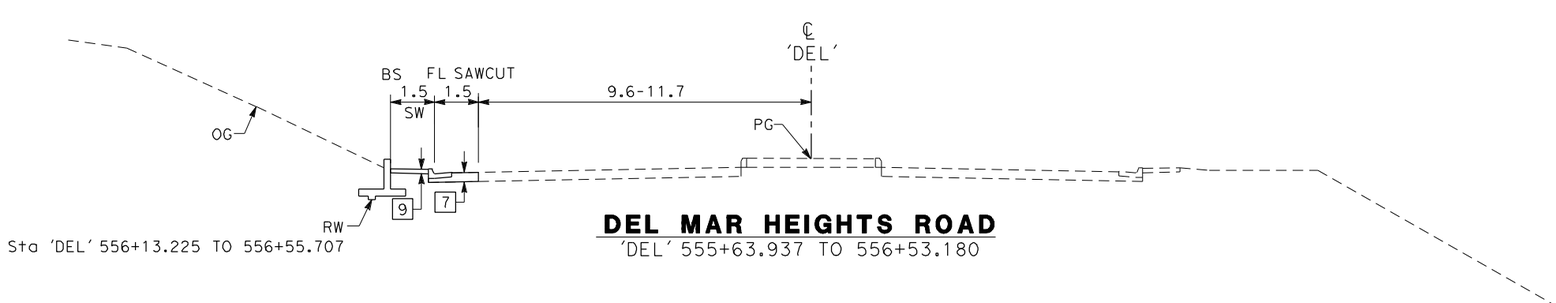

Sta 'DEL' 556+13.225 TO 556+55.707

DEL MAR HEIGHTS ROAD
'DEL' 555+63.937 TO 556+53.180

ALL DIMENSIONS ARE IN METERS UNLESS OTHERWISE SHOWN

ALTERNATIVE 2
TYPICAL CROSS SECTIONS
NO SCALE

X-19

REVISED BY | DATE REVISED
CALCULATED-DESIGNED BY | CHECKED BY
CONSULTANT FUNCTIONAL SUPERVISOR

STATE OF CALIFORNIA - DEPARTMENT OF TRANSPORTATION
Caltrans

LAST REVISION 00-00-00 | DATE PLOTTED => 3/30/2012 | TIME PLOTTED => 1:01:31 PM

Dist	COUNTY	ROUTE	KILOMETER POST TOTAL PROJECT	SHEET No.	TOTAL SHEETS
11	SD	5/56	52.6/56.0, R0.0/R4.1		

REGISTERED CIVIL ENGINEER DATE

PLANS APPROVAL DATE

REGISTERED PROFESSIONAL ENGINEER No. Exp. CIVIL STATE OF CALIFORNIA

THE STATE OF CALIFORNIA OR ITS OFFICERS OR AGENTS SHALL NOT BE RESPONSIBLE FOR THE ACCURACY OR COMPLETENESS OF ELECTRONIC COPIES OF THIS PLAN SHEET.

Dokken Engineering
5675 Ruffin Road
Suite 250
San Diego, CA 92123

Caltrans Metric

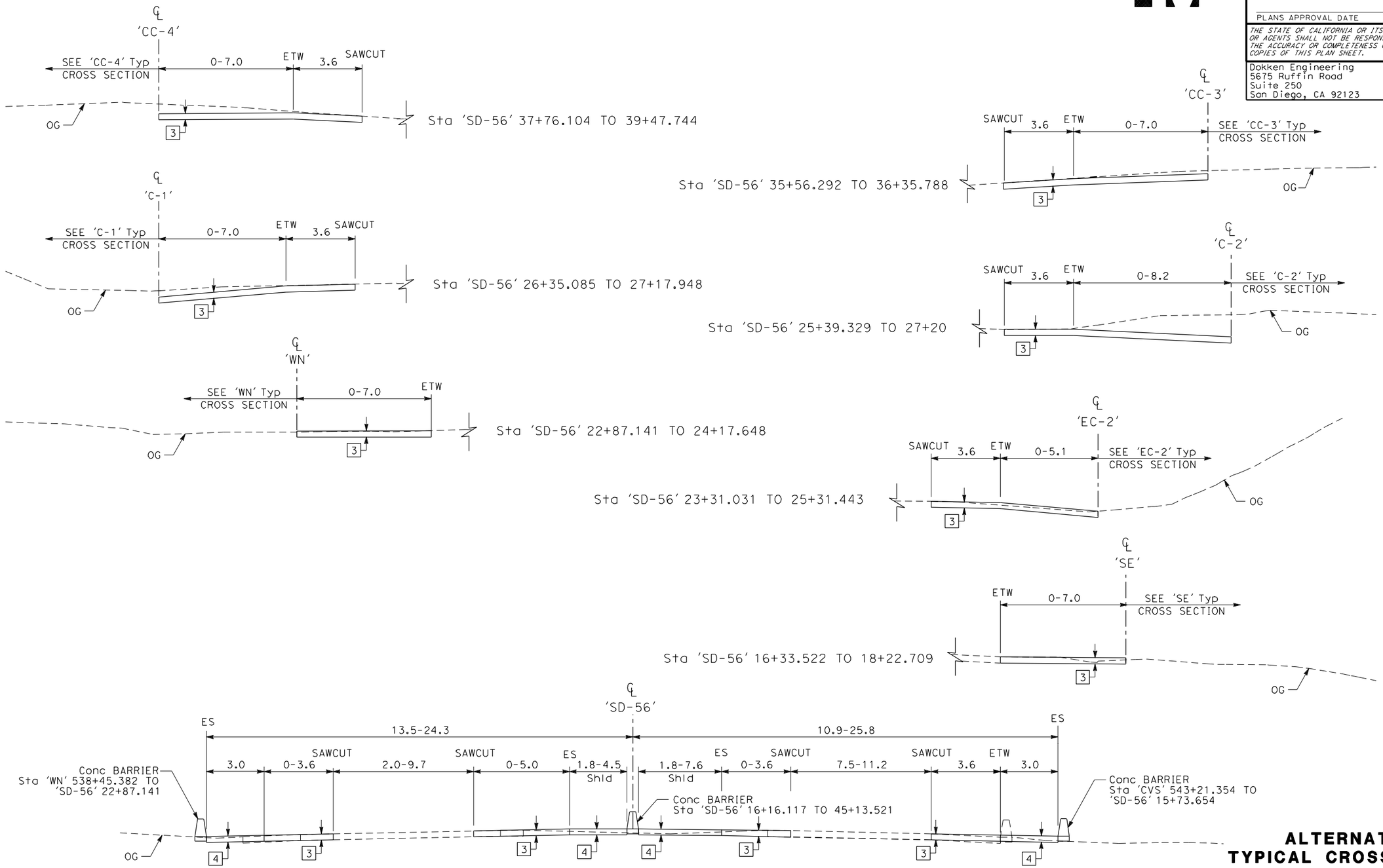

STATE ROUTE 56

'SD-56' 15+54.104 TO 40+54.162

ALL DIMENSIONS ARE IN METERS UNLESS OTHERWISE SHOWN

ALTERNATIVE 2
TYPICAL CROSS SECTIONS

NO SCALE

X-20

REVISED BY | DATE REVISED

CALCULATED-DESIGNED BY | CHECKED BY

CONSULTANT FUNCTIONAL SUPERVISOR

STATE OF CALIFORNIA - DEPARTMENT OF TRANSPORTATION

Caltrans

LAST REVISION 00-00-00 | DATE PLOTTED => 3/30/2012 TIME PLOTTED => 1:01:32 PM

Dist	COUNTY	ROUTE	KILOMETER POST TOTAL PROJECT	SHEET No.	TOTAL SHEETS
11	SD	5/56	52.6/56.0, R0.0/R4.1		

REGISTERED CIVIL ENGINEER DATE

PLANS APPROVAL DATE

REGISTERED PROFESSIONAL ENGINEER No. Exp. CIVIL STATE OF CALIFORNIA

THE STATE OF CALIFORNIA OR ITS OFFICERS OR AGENTS SHALL NOT BE RESPONSIBLE FOR THE ACCURACY OR COMPLETENESS OF ELECTRONIC COPIES OF THIS PLAN SHEET.

Dokken Engineering
5675 Ruffin Road
Suite 250
San Diego, CA 92123

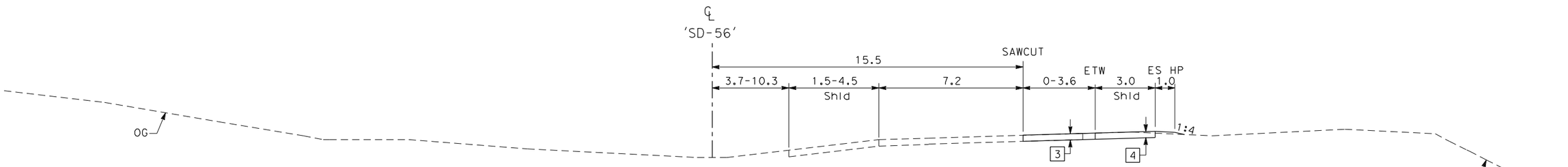

STATE ROUTE 56
'SD-56' 45+13.521 TO 51+08.075

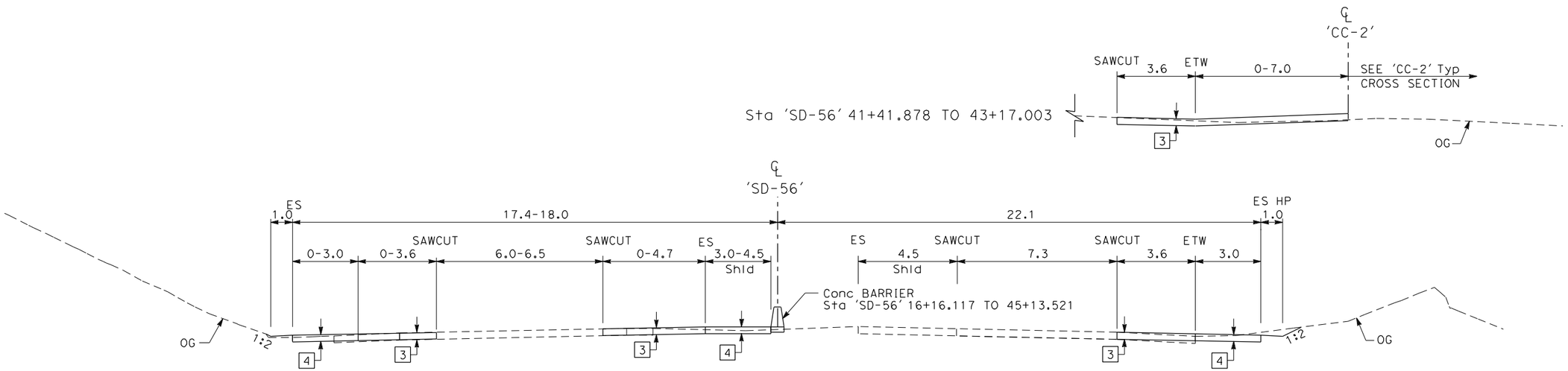

STATE ROUTE 56
'SD-56' 40+54.162 TO 45+13.521

ALTERNATIVE 2
TYPICAL CROSS SECTIONS

NO SCALE

ALL DIMENSIONS ARE IN METERS UNLESS OTHERWISE SHOWN

X-21

REVISED BY | DATE REVISED

CALCULATED-DESIGNED BY | CHECKED BY

CONSULTANT FUNCTIONAL SUPERVISOR

STATE OF CALIFORNIA - DEPARTMENT OF TRANSPORTATION

Caltrans

LAST REVISION 00-00-00 | DATE PLOTTED => 3/30/2012 | TIME PLOTTED => 1:01:33 PM

Dist	COUNTY	ROUTE	KILOMETER POST TOTAL PROJECT	SHEET No.	TOTAL SHEETS
11	SD	5/56	52.6/56.0, R0.0/R4.1		

REGISTERED CIVIL ENGINEER DATE

PLANS APPROVAL DATE

REGISTERED PROFESSIONAL ENGINEER No. Exp. CIVIL STATE OF CALIFORNIA

THE STATE OF CALIFORNIA OR ITS OFFICERS OR AGENTS SHALL NOT BE RESPONSIBLE FOR THE ACCURACY OR COMPLETENESS OF ELECTRONIC COPIES OF THIS PLAN SHEET.

Dokken Engineering
5675 Ruffin Road
Suite 250
San Diego, CA 92123

Caltrans Metric

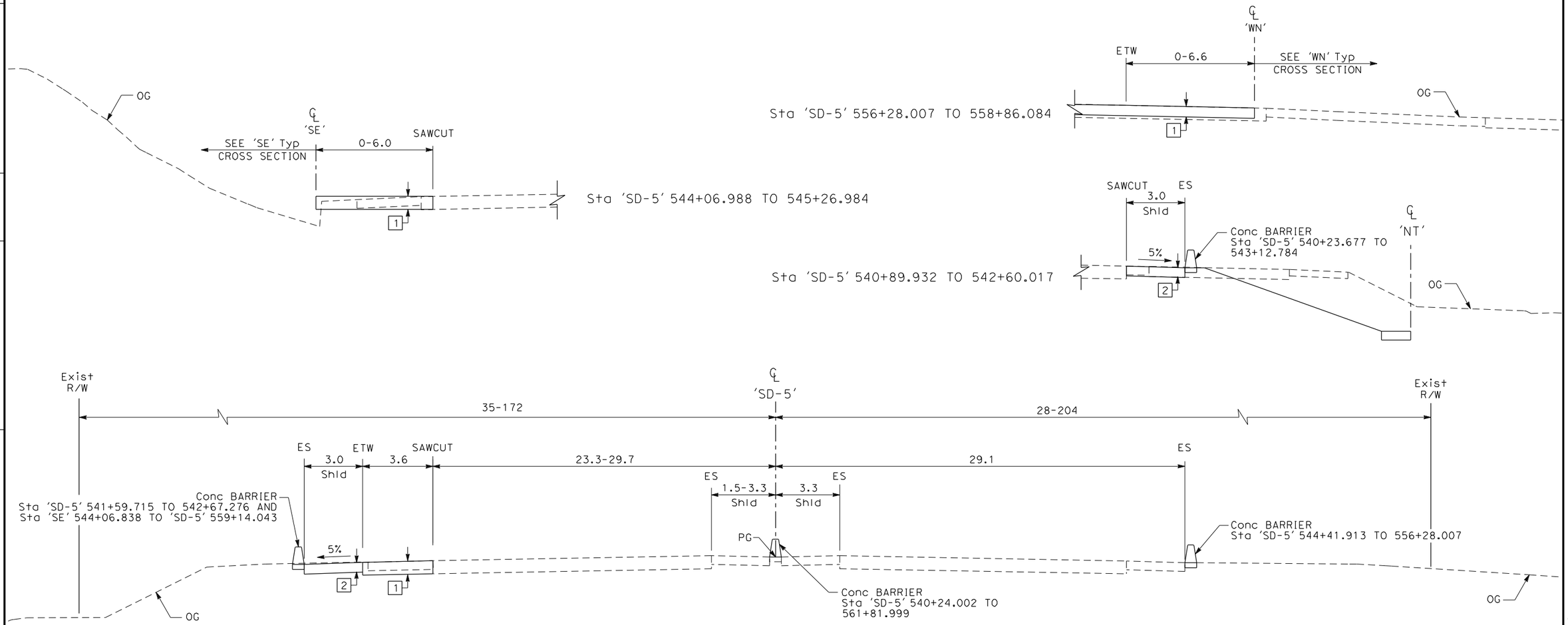

INTERSTATE 5

'SD-5' 540+24.002 TO 558+86.084

ALTERNATIVE 2
TYPICAL CROSS SECTIONS

NO SCALE

X-22

ALL DIMENSIONS ARE IN METERS UNLESS OTHERWISE SHOWN

REVISED BY | DATE REVISED

CALCULATED-DESIGNED BY | CHECKED BY

CONSULTANT FUNCTIONAL SUPERVISOR

STATE OF CALIFORNIA - DEPARTMENT OF TRANSPORTATION

Caltrans

LAST REVISION 00-00-00 | DATE PLOTTED => 3/30/2012 | TIME PLOTTED => 1:01:34 PM

Dist	COUNTY	ROUTE	KILOMETER POST TOTAL PROJECT	SHEET No.	TOTAL SHEETS
11	SD	5/56	52.6/56.0, R0.0/R4.1		

REGISTERED CIVIL ENGINEER DATE

PLANS APPROVAL DATE

REGISTERED PROFESSIONAL ENGINEER No. Exp. CIVIL STATE OF CALIFORNIA

THE STATE OF CALIFORNIA OR ITS OFFICERS OR AGENTS SHALL NOT BE RESPONSIBLE FOR THE ACCURACY OR COMPLETENESS OF ELECTRONIC COPIES OF THIS PLAN SHEET.

Dokken Engineering
5675 Ruffin Road
Suite 250
San Diego, CA 92123

Caltrans Metric

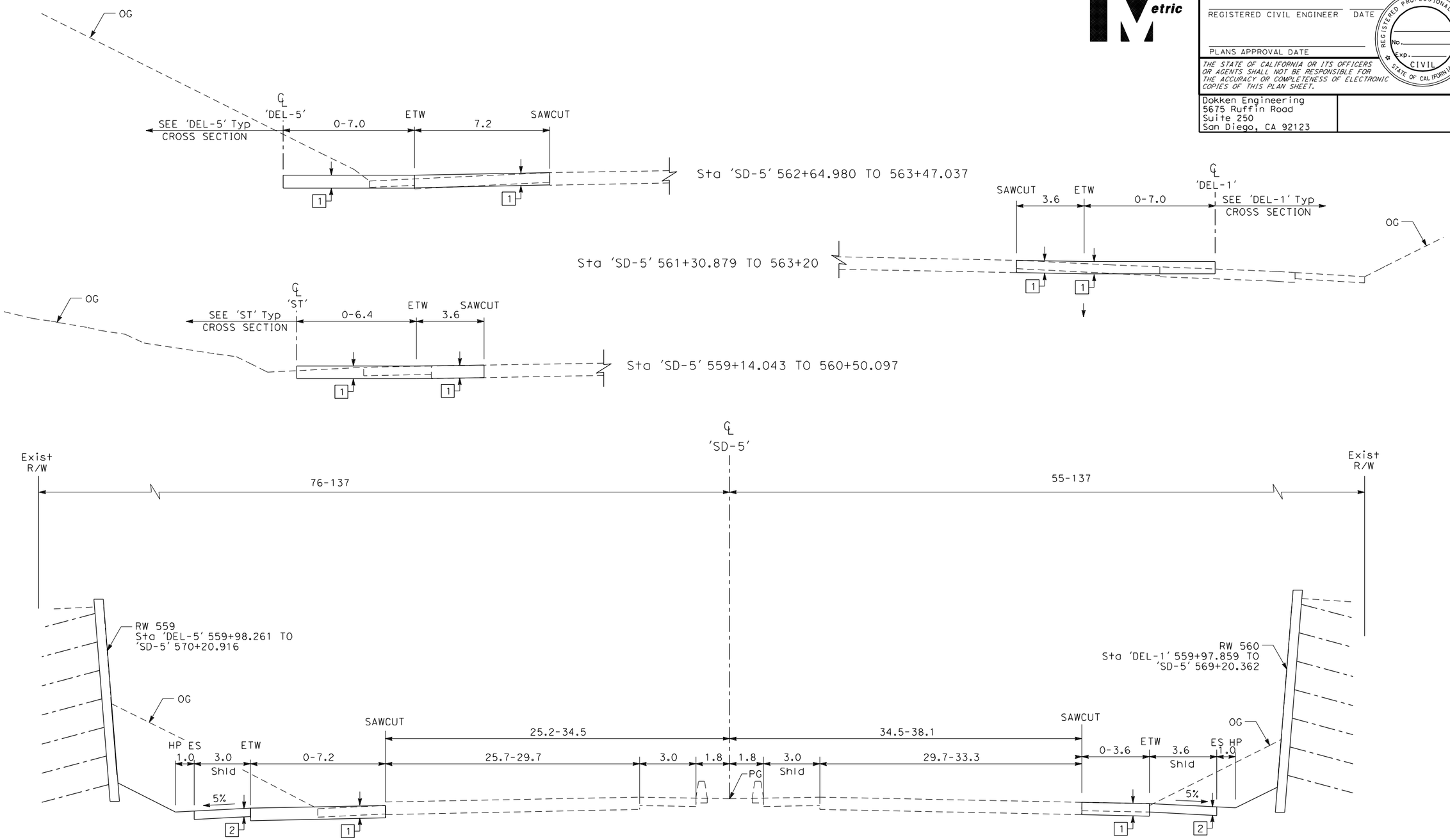

INTERSTATE 5

'SD-5' 558+86.084 TO 569+38.999

ALTERNATIVE 2
TYPICAL CROSS SECTIONS

NO SCALE

ALL DIMENSIONS ARE IN METERS UNLESS OTHERWISE SHOWN

X-23

STATE OF CALIFORNIA - DEPARTMENT OF TRANSPORTATION

Caltrans

CONSULTANT FUNCTIONAL SUPERVISOR | CALCULATED-DESIGNED BY | CHECKED BY | REVISED BY | DATE REVISED

LAST REVISION 00-00-00 | DATE PLOTTED => 3/30/2012 | TIME PLOTTED => 1:01:35 PM