metro.net/nw138

Northwest 138 Corridor Improvement Project

Transportation Analysis Report - Technical Appendix

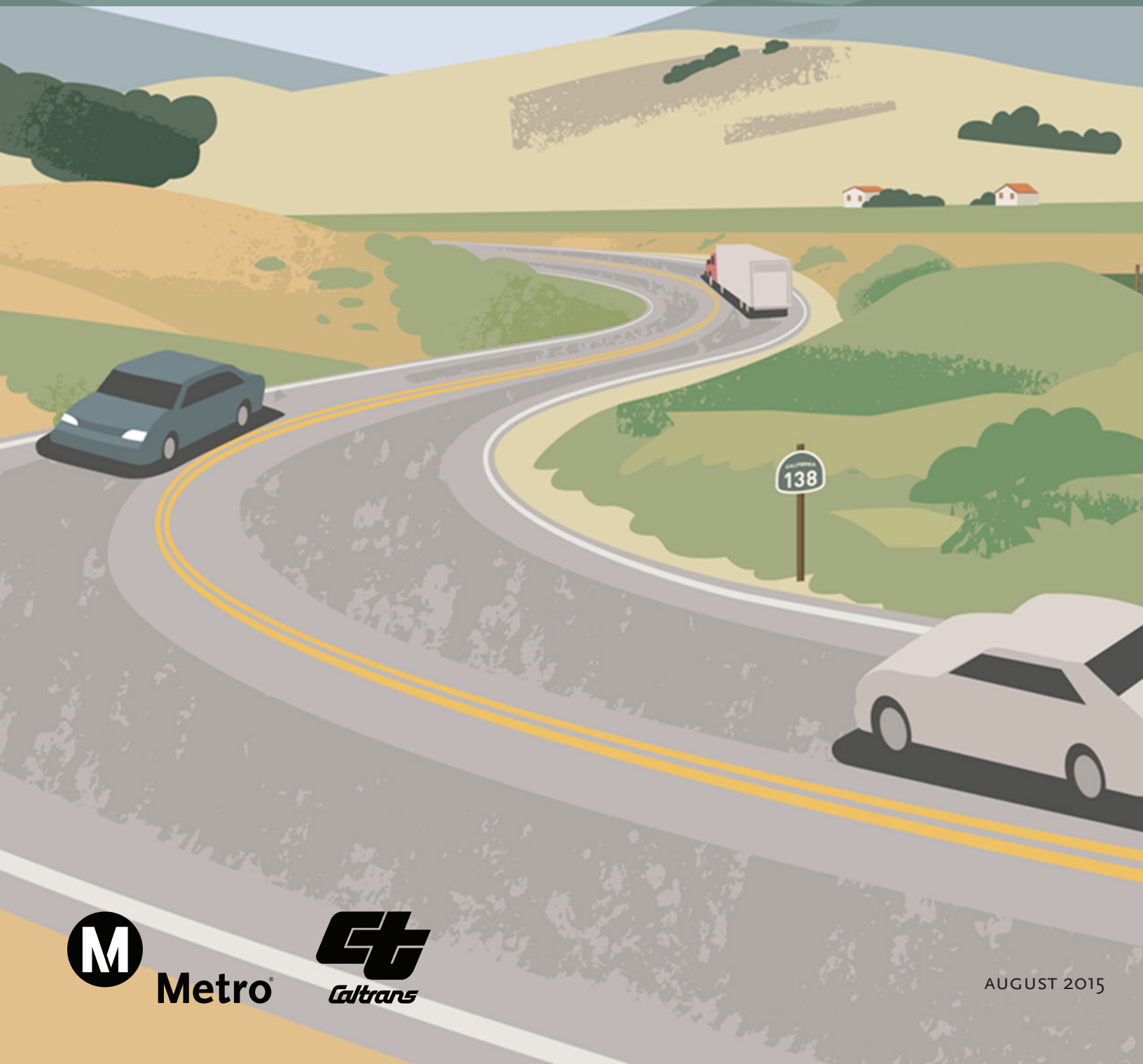

Metro

Caltrans

AUGUST 2015

Technical Appendix

Appendix A: Northwest 138 Corridor Improvement Project – Final Model Development Report

Appendix B: Count Sheets

Appendix C: PeMS Data

Appendix D: SR-138 (HCS 2010) LOS Worksheets – Existing Conditions

Appendix E: I-5 & SR-138 Operations HCM LOS Results for Existing, 2020/2025, and No Build/TSM Year 2040 VISSIM LOS Results for Year 2040 Alternatives 1 & 2

Appendix F: Intersection LOS Worksheets – Existing Conditions

Appendix G: Intersection Control Evaluation (ICE) Report

Appendix H: SR-138 (HCS 2010) LOS Worksheets – 2020 and 2025 Conditions

Appendix I: Intersection LOS Worksheets – 2020 and 2025 Conditions

Appendix J: SR-138 (HCS 2010) LOS Worksheets – 2040 Conditions

Appendix K: Intersection LOS Worksheets – 2040 Conditions

Appendix A
Northwest 138 Corridor Improvement Project – Final Model Development Report

metro.net/nw138

Northwest 138 Corridor Improvement Project

Model Development Report - Final

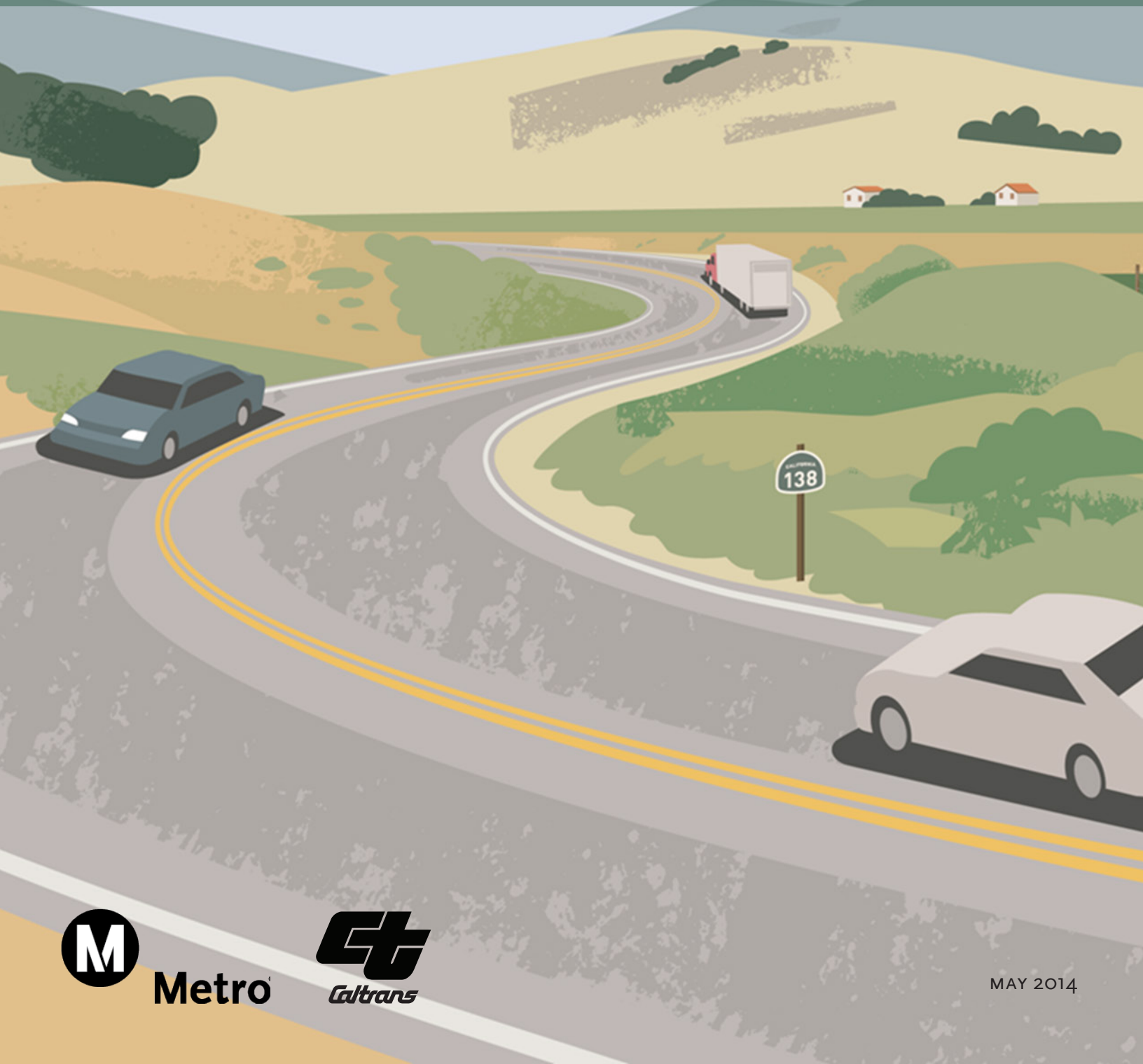

Metro

Caltrans

MAY 2014

Contents

1 Introduction 2
- Project Background 2
- Model Area 2
- Report Organization 3

2 Model Evaluation, Selection & Approach 5
- Model Evaluation 5
- Model Selection 6
- Model Approach 6

3 Land Use 9
- Sub-Area Model Land Use 9
- Local Growth Projections 10
- Major Development Projects 11
- TAZ Structure Refinements 13

4 Transportation Network 14
- SCAG Network 14
- Kern COG Network 15
- Roadway Network Enhancements 18

5 Truck Travel 19
- Truck Studies, Reports and Data 19
- Heavy Duty Truck (HDT) Model Review 19

6 Model Validation 21
- Subarea Model Updates 21
- Static Validation 21

7 Preliminary Forecasts 23

1 Introduction

Fehr & Peers is leading the preparation of the Traffic Report for the Northwest 138 Corridor Improvement Project. This model development report documents the Travel Demand Forecasting (TDF) methodology used to prepare the future travel demand along the study corridor and contains preliminary future traffic forecasts for review by the project team.

PROJECT BACKGROUND

The Northwest 138 Corridor Improvement Project consists of a 36-mile section of State Route 138 (SR-138) between Interstate 5 (I-5) and State Route 14 (SR-14). Situated in Antelope Valley in the northwest corner of Los Angeles County and just south of the Kern County border, the highway is the main east-west route connecting the I-5 to the Antelope Valley, Lancaster, Palmdale and other High Desert communities. This corridor is currently a two-lane undivided highway and functions as a bypass for people and goods movement, as well as providing critical mobility for the Antelope Valley economy which provides employment opportunities, such as space technology and alternative energy.

The Northwest 138 Corridor Improvement Project will expand on the previous North County combined Highway Corridor Study completed in 2004 to develop a multi-modal transportation plan for the northern portion of Los Angeles County to address both short and long-term needs for a variety of trip purposes and goods movement. To accommodate the potential for both population and economic growth in the future, a variety of project alternatives will be studied to improve this portion of SR-138.

MODEL AREA

The model area for the SR-138 traffic analysis is shown in Figure 1. The corridor is located at the northern edge of the Southern California Association of Governments (SCAG) region. Therefore, the transportation analysis required an integrated modeling approach with the latest version of the SCAG regional model (SCAG RTP 2012 V6.1) as the foundation for the modeling process along with portions of the Kern County Council of Governments (Kern COG) model.

REPORT ORGANIZATION

The remainder of this report is divided into the following sections:

- **Chapter 2**: Model Evaluation, Selection & Approach
- **Chapter 3**: Land Use
- **Chapter 4**: Transportation Network
- **Chapter 5**: Truck Travel
- **Chapter 6**: Model Validation
- **Chapter 7**: Preliminary Forecasts

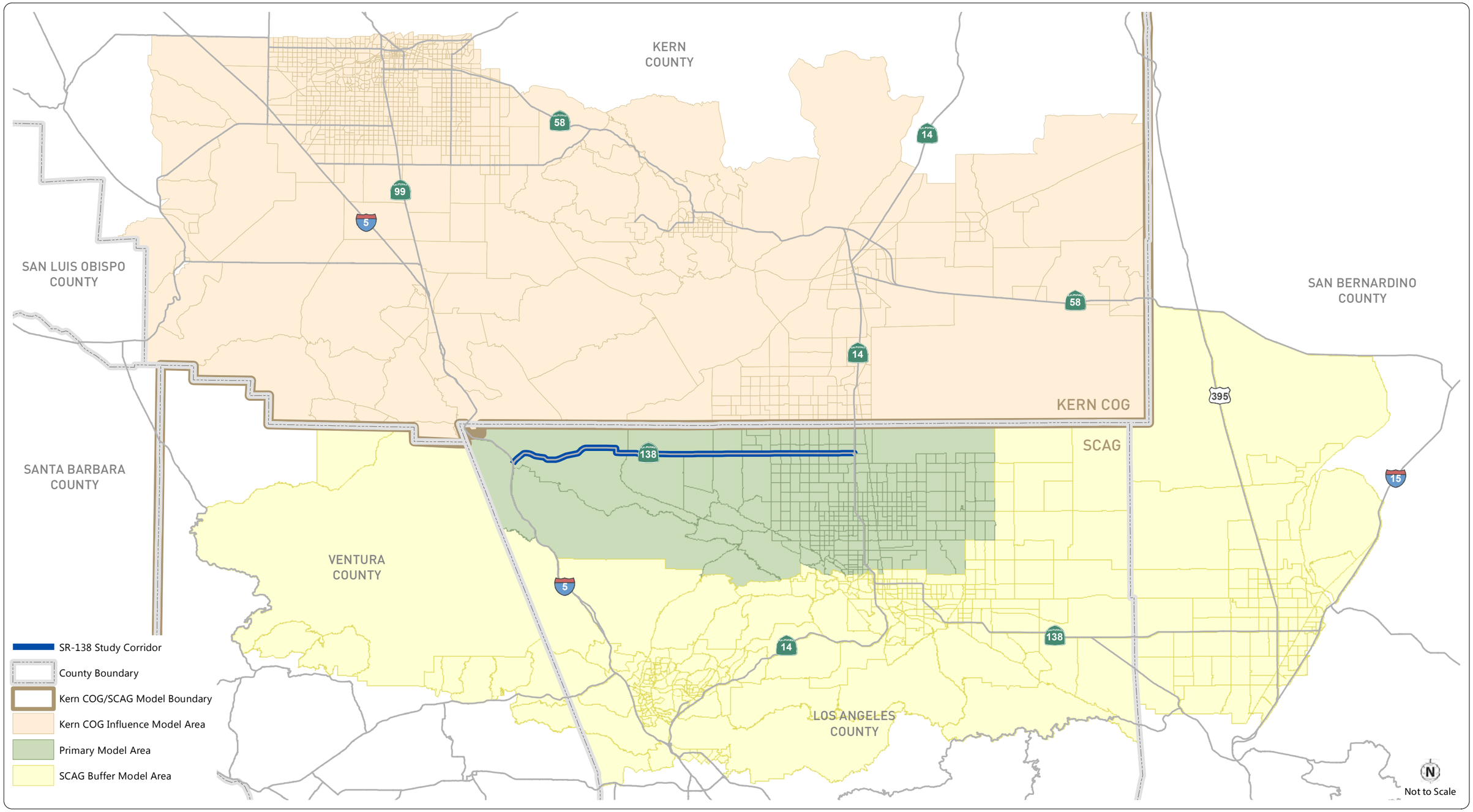

FEHR PEERS

Path: N:\Jobs\Active\2500s\2599 - SR 138\Graphics\GIS\FromRosevile_6_13_13\GIS\MXD\SubAreaRegion11x17.mxd

Figure 1
Sub-Area TDF Regional Map:
SR 138

2 Model Evaluation, Selection & Approach

A variety of local and regional models were evaluated for this study given the location of the project study area. The models evaluated along with the models selected for use are described in this chapter.

MODEL EVALUATION

The following six TDF models were identified as potential sources to develop the travel forecasts along the project study corridor:

1. SCAG 2012 RTP model;
2. Kern COG TDF Model;
3. Enhanced Antelope Valley Travel Analysis Model (EAVTAM);
4. City of Santa Clarita Model;
5. Caltrans Model developed for the High Desert Corridor; and the
6. California Statewide Model.

Below is an overview of each of the models.

- **SCAG 2012 RTP** – This model is maintained by the Southern California Association of Governments (SCAG), with the latest update completed in 2012. A few updates have been made to this model since the release of the 2012 RTP in April 2012; version 6.1 will be used for this project. SCAG is currently working with a new version of the model (version 6.2), which will have a more refined tolling component; however, this version of the model will not be released until mid to late-2014. The SCAG RTP model has a 2008 Base Year and a 2035 Future Year. It is a regional model that covers five Southern California counties (Los Angeles, Orange, Riverside, San Bernardino and Ventura). The model includes two future scenarios: the 2035 Planned and the 2035 Baseline. The Planned scenario includes all projects to be developed as part of the RTP by 2035, and the Baseline scenario includes all funded projects to year 2018 as specified in the 6 year FTIP funding cycle.
- **Kern COG** – This model is maintained by the Kern Council of Governments, with an update expected in mid-2014. The latest released version has a 2006 Base Year, and both 2020 and Buildout (2035-2040) future years. The Kern COG model covers the extent of Kern County, with external gateways to and from SR 14 and I-5 in Los Angeles County.

  The study area within Kern County includes the Sierra Highway to the east, I-5 to the west, Silver Queen Road and the Grapevine to the north, and the County line to the south.

- **EAVTAM** – This model was developed for the North County Transportation Commission. It has a 2008 Base Year and 2035 future year and is tiered off of a previous version of the SCAG model. This model covers North Los Angeles County, notably the cities of Palmdale and Lancaster.
- **Santa Clarita** – This model was developed for the City of Santa Clarita as part of its General Plan efforts. The model provides land use forecasts for the 2004 base year and 2035 General Plan Buildout.
- **California Statewide** – This model is currently under development. The model represents vehicular and truck traffic across the state; at this point only the 2010 base year model is available.
- **High Desert Corridor** – This model relies on the 2008 SCAG RTP model and was used to develop traffic forecasts for the High Desert Corridor project in North Los Angeles County. It has a 2008 base year and 2035 future year consistent with the 2008 SCAG RTP.

MODEL SELECTION

After reviewing the available models and considering the proximity of the study corridor to the edge of the Los Angeles County and Kern County boundary, the development of a Northwest 138 Sub-Area Model to better represent the study area, roadway network, and interactions between the two counties that would affect travel along the SR-138 corridor was identified as the preferred modeling approach. The refined and fully integrated sub-area model reflects the socioeconomic projections and transportation network improvements contained in the SCAG 2035 RTP and Kern COG RTP models. It also reflects local land use and roadway network details from the EAVTAM model.

MODEL APPROACH

The Northwest 138 Sub-Area model utilizes the SCAG regional model as a base platform to develop the trip demand in and around the SR-138 corridor. Trip demand from the Kern COG model is also integrated into the model to capture the interactions between the two counties. In addition, the model includes detail in the study area to properly capture future trip demand at the local level. This was crucial in properly forecasting the traffic operations of the SR-138 corridor.

The following steps were taken to generate the Northwest 138 Sub-Area Model:

1. Applied the SCAG regional model version 6.1 to generate a sub-area model platform
    a. Base Year sub-area extraction (trip tables and network)
    b. Future Year sub-area extraction (trip tables and network)
2. Added detailed TAZ and network structure from EAVTAM for Palmdale and Lancaster
3. Joined Kern COG TAZ and network structure
4. Refined TAZ and network structure along SR-138 Corridor

Figure 2 presents the subarea model boundary and network. Figure 3 presents the modeling approach.

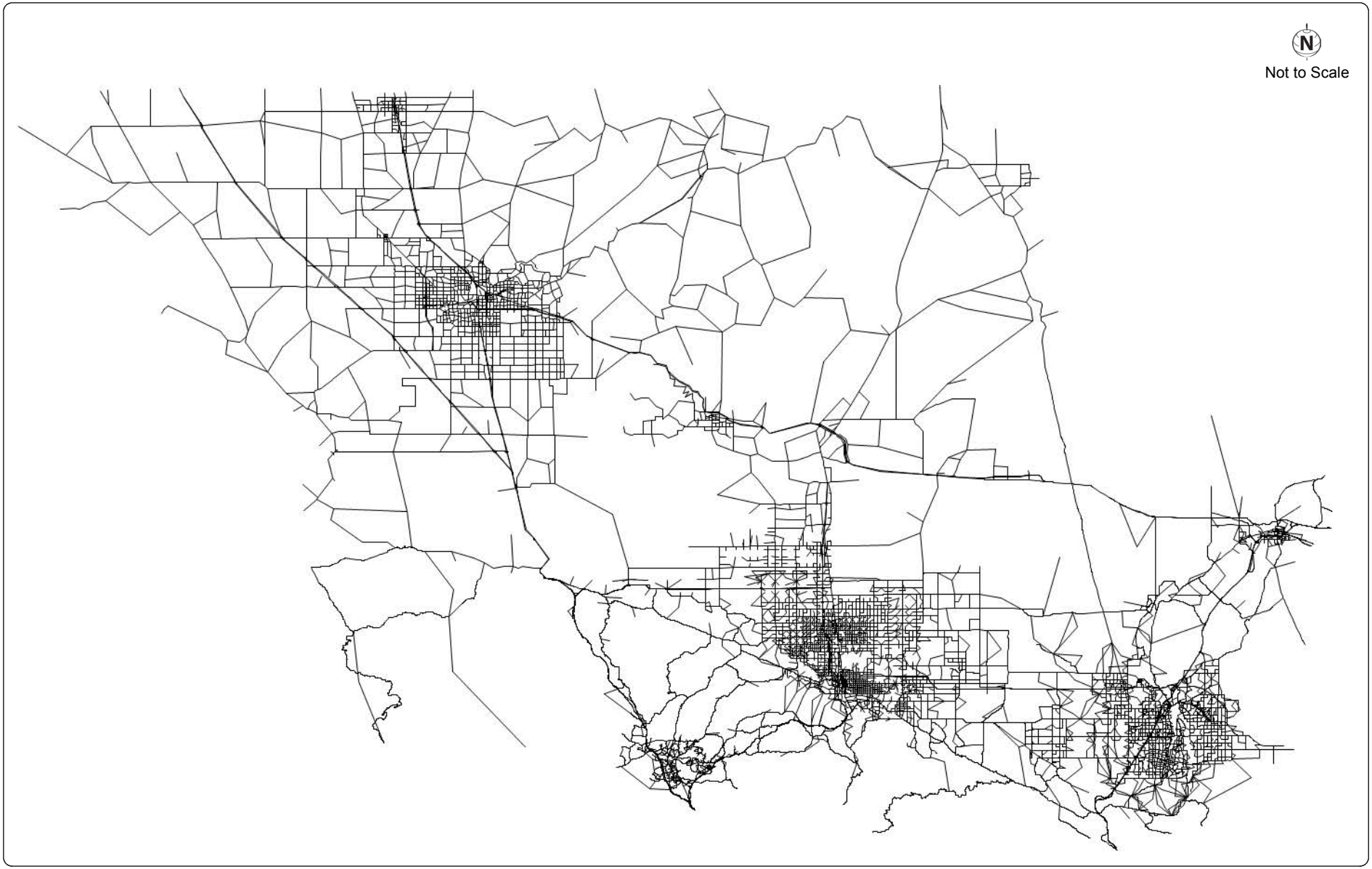

FEHR PEERS

Figure 2
SR-138 Subarea Network

Figure 3 – Sub-Area Model Development

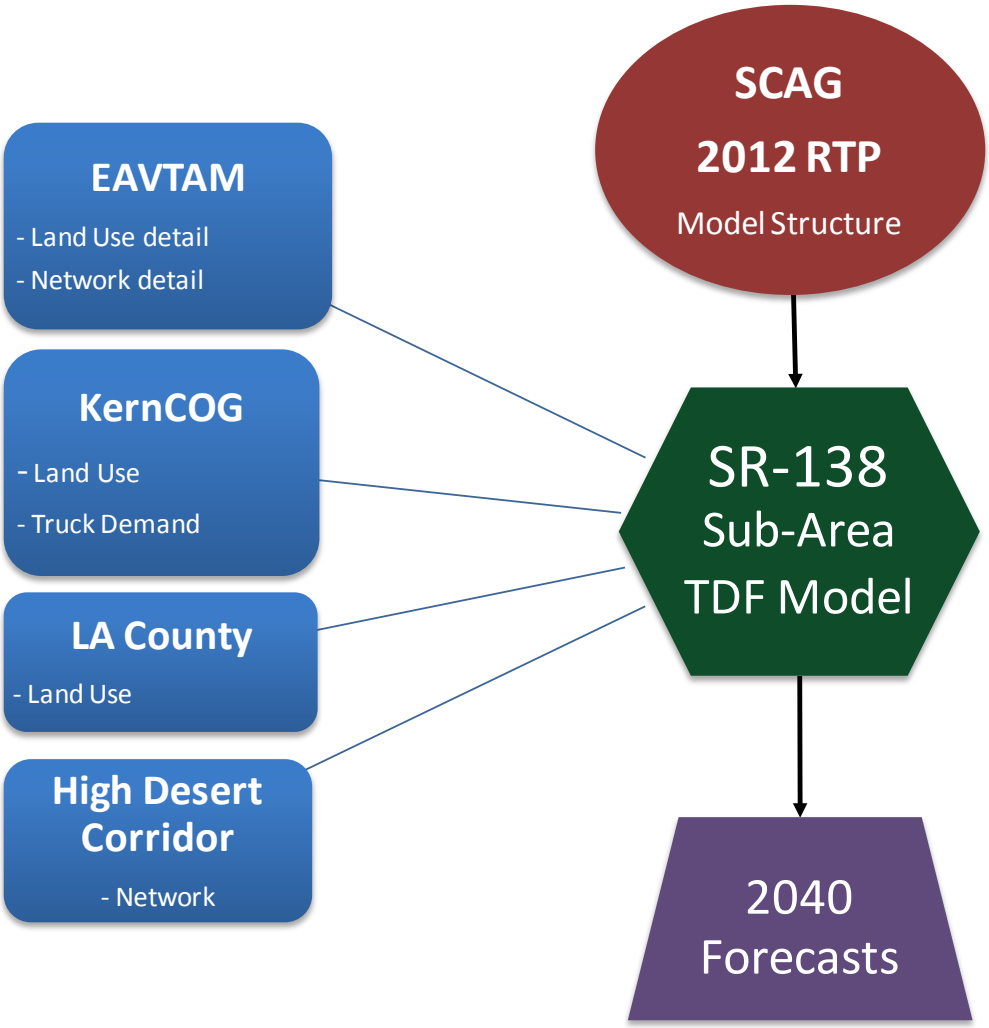

3 Land Use

The Northwest 138 Sub-Area traffic volume forecasts are derived from future land use projections. The land use assumptions included in the SCAG, EAVTAM, Santa Clarita, and Kern COG RTP models were compared to forecasted growth in the SR-138 study area. Additionally, the general plan land use for Lancaster and the East Antelope Valley Plan area were also reviewed along with major development projects within the study area. These land use assumptions are summarized below.

SUB-AREA MODEL LAND USE

Base year and future year land use data was reviewed for each County.

SCAG Region

For the SCAG RTP model, there are two versions of land use: 1) the 2035 Baseline socioeconomic data, and 2) the 2035 Planning socioeconomic data. The former is based on incremental growth to the region, whereas the latter applies local and regional planning policies to project future land use and population. The Planning version was used for these projections, as it provides a more realistic forecast of land use growth in the area in consideration of regional growth totals. The SCAG area includes unincorporated Los Angeles County land along the SR-138 corridor and the cities of Palmdale, Lancaster and Santa Clarita. Table 1 summarizes the land use growth in the SCAG RTP model within the study area. Land use by TAZ is contained in Attachment A.

Table 1 – SCAG Land Use Summary for SR-138 Corridor Study Area

Lancaster					
Category	**Base Year**	**2035**	**Delta**	**% Growth**	**AGR[1]**
Population	155,648	206,658	51,010	32.8%	1.2%
Households	46,653	60,571	13,918	29.8%	1.1%
Employment	48,225	54,230	6,005	12.5%	0.5%
Palmdale					
Category	**Base Year**	**2035**	**Delta**	**% Growth**	**AGR**
Population	147,541	211,752	64,211	43.5%	1.6%
Households	41,401	60,425	19,024	46.0%	1.7%
Employment	34,580	48,989	14,409	41.7%	1.5%
LA County (within Study Area only)					
Category	**Base Year**	**2035**	**Delta**	**% Growth**	**AGR**
Population	112,824	198,689	85,865	76.1%	2.8%
Households	37,293	70,449	33,156	88.9%	3.3%
Employment	22,372	57,799	35,427	158.4%	5.9%

Santa Clarita					
Category	**Base Year**	**2035**	**Delta**	**% Growth**	**AGR**
Population	182,803	250,010	67,207	36.8%	1.4%
Households	61,446	85,975	24,529	39.9%	1.5%
Employment	93,011	122,079	29,068	31.3%	1.2%
Total					
Category	**Base Year**	**2035**	**Delta**	**% Growth**	**AGR**
Population	598,816	867,109	268,293	44.8%	1.7%
Households	186,793	277,420	90,627	48.5%	1.8%
Employment	198,188	283,097	84,909	42.8%	1.6%

Notes:
1. Annual Growth Rate – Linear

Source: Fehr & Peers, 2014

KernCOG Region

The study area within Kern County includes the Sierra Highway to the east, just west of I-5 to the west, Silver Queen Road and the Grapevine to the north, and the County line to the south. The Kern COG model forecasts an overall growth in the study area of 8,900 households (3.4% annual growth) and 15,500 jobs (11% annual growth). The majority of new jobs would be in the service industry. Table 2 summarizes the land use data adjacent to the study area in the Kern COG model.

Table 2 – Kern COG Model Land Use Summary

Category	2006	2035	Delta	% Growth	AGR[1]
Population	22,212	50,287	28,075	126.4%	4.4%
Households	8,904	17,783	8,879	99.7%	3.4%
Retail Employment	563	2,687	2,124	377.3%	13.0%
Service Employment	1,481	14,513	13,032	879.9%	30.3%
Other Employment	2,853	3,162	309	10.8%	0.4%
Total Employment	4,897	20,362	15,465	315.8%	10.9%

Notes:
1. Annual Growth Rate - Linear

Source: Fehr & Peers, 2014

LOCAL GROWTH PROJECTIONS

For the purpose of the Northwest 138 Sub-Area Model, SCAG land use totals for the study area were maintained to be consistent with SCAG's regional growth projections. Kern County growth projections were also kept consistent with the Kern COG model. However, local land use growth projections were obtained for comparison purposes and will be used to conduct sensitivity testing of required roadway improvements under both regional (SCAG/Kern COG) and local growth forecasts.

The local land use assumptions were obtained as follows:

- **City of Palmdale** - Land use growth for the Palmdale area was provided by the City of Palmdale based on the EAVTAM model. The EAVTAM model is forecasting that the Palmdale area will grow more substantially by 2035 than the regional SCAG model.
- **City of Lancaster** - Land use growth projections for Lancaster were obtain from City staff based on the City's General Plan. Although Lancaster is included in the EAVTAM model, the most recent growth projections for Lancaster have not yet been incorporated into the EAVTAM model.
- **LA County** - The Los Angeles County Department of Regional Planning is currently preparing the Antelope Valley Area Plan Update, which will guide growth in the unincorporated areas of Antelope Valley. The latest adopted plan for the Antelope Valley is from 1986. In 2009, the County prepared a background report about the Antelope Valley Area Plan Update, and the County is currently revising the land use growth projections for this area. At the time of this report, the land use forecasts are not yet available. Therefore, local growth forecasts (compared to SCAG forecasts) are not included in this report. The growth estimates will be reviewed upon release of the Antelope Valley Area Plan from Los Angeles County.

Table 3 summarizes the difference between the local growth forecasts and the SCAG RTP model.

Table 3 – SCAG Model vs. Local Growth Forecasts

Jurisdiction	Category	2035 SCAG Model	2035 Local Growth Forecasts	Delta	% Difference
Lancaster	Population	206,658	258,555	51,897	25.1%
	Households	60,571	82,103	21,532	35.5%
	Employment	54,230	64,095	9,865	18.2%
Palmdale	Population	211,752	276,416	64,664	30.5%
	Households	60,425	77,695	17,270	28.6%
	Employment	48,989	84,360	35,371	72.2%

Source: Fehr & Peers, 2014

MAJOR DEVELOPMENT PROJECTS

- **Western Economic Opportunity Area** - This area represents several planned development projects. Two of the larger projects planned for this area are described in detail below based on the latest available information.
    - ***Centennial Master Plan***: The Centennial project is a master-planned new town on nearly 12,000 acres of land located near the I-5 and SR-138 junction, surrounding the north and east sides of Quail Lake. The project is located in both unincorporated Los Angeles and Kern Counties. The project proposes 23,000 homes and 30,000 jobs, per the project website, and intends to develop 30,000 jobs and provide shopping, recreation, health care facilities, schools, and public services. It is planned to be built over 25 to 30 years, starting from the west and working east into the SR-138 corridor. The SCAG RTP model shows a growth in the Centennial area of 22,530 new households and 16,500 new employees. The Kern COG model shows a growth of another 1,500 homes near the Centennial area, but few new jobs. As such, the housing growth in the area is accounted for within the model,

but the number of new jobs is not fully accounted for in the SCAG 2035 growth projections.

- ***Gorman Post Ranch***: Gorman Post Ranch is a proposed 531-home development in southern Kern County, just north of the Los Angeles/Kern County border. The project is located just west of the Centennial Master Plan area and at the junction of I-5 and SR-138. This project may be accounted for in the SCAG model as it is located within the same TAZ as the Centennial project. Between the new housing units forecasted in the SCAG and Kern COG models, the new housing proposed would be accounted for in the current growth projections.

Table 4 summarizes the growth in the Western Economic Opportunity Area as represented in the SCAG RTP model.

Table 4 – SCAG Land Use Summary: Western Economic Opportunity Area

Category	2008	2035	Delta
Population	3,508	65,264	61,756
Households	1,239	22,328	21,089
Employment	742	16,605	15,863
Source: Fehr & Peers, 2014			

- **Central Economic Opportunity Area** - Development plans for the Fox Airfield within the Central Economic Opportunity Area are currently underway and planned growth projections have been requested from LA County Department of Regional Planning. At the time of this report, the growth projections are still under review at the County and are not yet available for use. Therefore, the SCAG growth projections have been applied to the TAZs representing the Fox Airfield area. The SCAG growth allocated to this area is shown in Table 5 below. The planned growth projections will be reviewed in further detail upon release from Los Angeles County.

Table 5 – SCAG Land Use Summary: Central Economic Opportunity Area (Fox Airfield TAZs)

Category	2008	2035	Delta
Population	50	58	8
Households	16	18	2
Employment	82	87	5
Source: Fehr & Peers, 2014			

- **Lancaster Water Reclamation Plant** - The Lancaster Water Reclamation Plant is located at 1865 West Avenue D, near the intersection of Sierra Highway and Avenue D. The plant has been in operation since 1959 at this location. The Sanitation Districts of Los Angeles County prepared a 2020 Facilities Plan in May 2004 to address current and future wastewater management conditions by proposing construction of additional wastewater treatment facilities at this site. The project EIR shows that there would be only a small increase in daily trips to the site with the expansion of the Water Reclamation Plant.

- **Alpine Solar Farm** - The Alpine Solar Farm is located at 21125 West Avenue C, just north of the SR-138 corridor. This project opened in May 2013 and consists of a 66 megawatt photovoltaic facility.
- **AV Solar Ranch** - The AV Solar Ranch is located along the SR-138 corridor near 170th Street West. It will produce 230 megawatts of photovoltaic energy. The first 100 megawatts of energy came online in February 2013; construction is anticipated for completion by the end of 2013.
- **Antelope Solar Farm** - Antelope Solar Farm is a 20 megawatt solarvoltaic facility located south of SR-138 near 110th Street West. It is scheduled to be in operation by the end of 2013.

TAZ STRUCTURE REFINEMENTS

Based on the land use review, the SCAG 2012 RTP model TAZ structure was modified to better represent future developments in the SR-138 study area. TAZ disaggregation was also performed to match the EVATAM model where appropriate. Aside from more accurately representing the spatial location of land use, the TAZ disaggregation reduced the size of TAZs in the model. This helped reduce the number of trips internalized by each zone by providing additional access to the roadway network as well as a smaller amount of land use to potentially interact with. Potential trips relating to TAZs not included in the sub-area model were included as external trips, entering the sub-area model at the gateways.

4 Transportation Network

The traffic volume forecasts are also influenced by modifications to the existing transportation network according to improvement projects anticipated to be constructed by the design year (2040). The SCAG and Kern COG models were compared for network improvements between the base and future years.

SCAG NETWORK

The SCAG RTP model has three networks:

- Base Year Network
- 2035 Baseline Network – Includes all Near-Term Funded Projects
- 2035 Planning Network – Includes all Financially Constrained Projects to 2035

When comparing the base year network to the 2035 Baseline network, the following modifications were made in the study area (see Figure 4):

- Avenue G between 20th Street and 30th Street – widened from two to six lanes
- Avenue I between the SR-14 Southbound On-Ramp and SR-14 Northbound On-Ramp – widened from four to six lanes

The 2035 Baseline network was then compared to the 2035 Planning network. Both of these networks are considered financially constrained, with the difference being that the Baseline network only contains projects in the 6-year FTIP while the Planning network contains projects that are matched to reasonably available funding, with a detailed financial analysis being performed every few years.

In addition to the improvements contained in the 2035 Baseline network, the following roadway improvements are reflected in the 2035 Planning network:

- High Speed Rail – The 2035 Planning network reflects Phase I of the High Speed Rail project, with extents from Anaheim into Kern County. In the model area, the High Speed Rail travels North-South between SR-14 and I-15. The High Speed Rail also travels south on SR-14 into Santa Clarita with a station in Palmdale.
- High Desert Corridor – New expressway route with limited access beginning at SR-14 and extending east into San Bernardino County. The High Desert Corridor would be a divided highway with three to four travel lanes in each direction.
- SR-138 between I-5 and SR-14 – Planned widening from a 2-lane full-access expressway route with at-grade crossings to a 6-lane limited-access expressway route with interchanges.

- Sierra Highway between SR-138 and Avenue E – Planned widening from a 2-lane full-access arterial to a 4-lane limited access expressway route (SR-138 extension/High Desert Corridor).
- Avenue E between Sierra Highway and 90th Street – Planned widening from a 2-lane full-access collector to a 4-lane limited access expressway route (SR-138 extension).
- 90th Street between Avenue E and Avenue L – Planned widening from a 2-lane full-access collector to a 4-lane limited access expressway route (SR-138 extension).
- I-5 between Ridge Route Road and SR-14 – Construction of an HOV lane in each direction.
- SR-14 between Avenue M and I-5 – Addition of an HOV lane in each direction.
- 30th Street between Avenue G and Avenue H – Planned widening from two to four lanes.

Figure 4 presents the network improvements in the SCAG RTP Model and includes HOV Lanes on SR 14 and I-5, the High Desert Corridor, and roadway widening projects in the Palmdale, Lancaster and Los Angeles County areas of the Antelope Valley.

KERN COG NETWORK

The major changes in the Kern COG network between the 2006 Base Year and the 2035 Future Year are in the Rosamond area. This is one of the locations where substantial population growth is forecasted. As a result, although the TAZ centroid structure is consistent with the 2006 base year, the 2035 model network includes more collector roads in the Rosamond area.

North of the study area, in Bakersfield, there are four major roadway improvements, located on SR-58, SR-99 and the Westside Parkway, respectively:

- SR-58 will be widened between SR-99 and Fairfax Road from four to six lanes to eight lanes of mainline freeway. Additionally, one HOV lane in each direction will be constructed from SR-99 to SR-184. These improvements are located in Bakersfield.
- An HOV lane will be constructed in each direction of SR-99 from SR-119 to Merle Haggard Drive.
- Westside Parkway will be constructed east of SR-99 to SR-43. It will be a limited-access freeway with three to four mainline travel lanes and one HOV lane per direction.
- SR-43 will be improved from a 2-lane arterial roadway to a 4-lane divided highway with limited access.

There are eight locations in the Rosamond area where network changes show roadway widening:

- Gaskell Road between 90th Street and 60th Street – Widen from two to four lanes
- Rosamond Boulevard between 40th and 45th Streets – Widen from two to four lanes
- Silver Queen Road between 40th Street and Dominion Street – Widen from two to four lanes
- 30th Street between Avenue A and Rosamond Boulevard – Widen from two to four lanes
- 60th Street between Avenue A and Rosamond Boulevard – Widen from two to four lanes
- 90th Street between Avenue A and Rosamond Boulevard – Widen from two to four lanes
- Avenue A between 30th Street and Sierra Highway – Widen from two to six lanes

- Rosamond Boulevard between 30th Street and Sierra Highway – Widen from two to six lanes
- Rosamond Boulevard between 40th Street and 30th Street – Widen from four to six lanes

The network improvements in the Kern COG Model are presented in Figure 4 and include HOV lanes on SR 99, widening of SR 58 from SR 184 to SR 99, and extension of SR 58 / Westside Parkway from Allen Road to SR 43. It should be noted that the Kern COG Model does not show SR 58 extended to I-5, and vehicles (cars and trucks) would continue to travel along 9.2 miles of rural highway to connect between I-5 and SR 58/Westside Parkway.

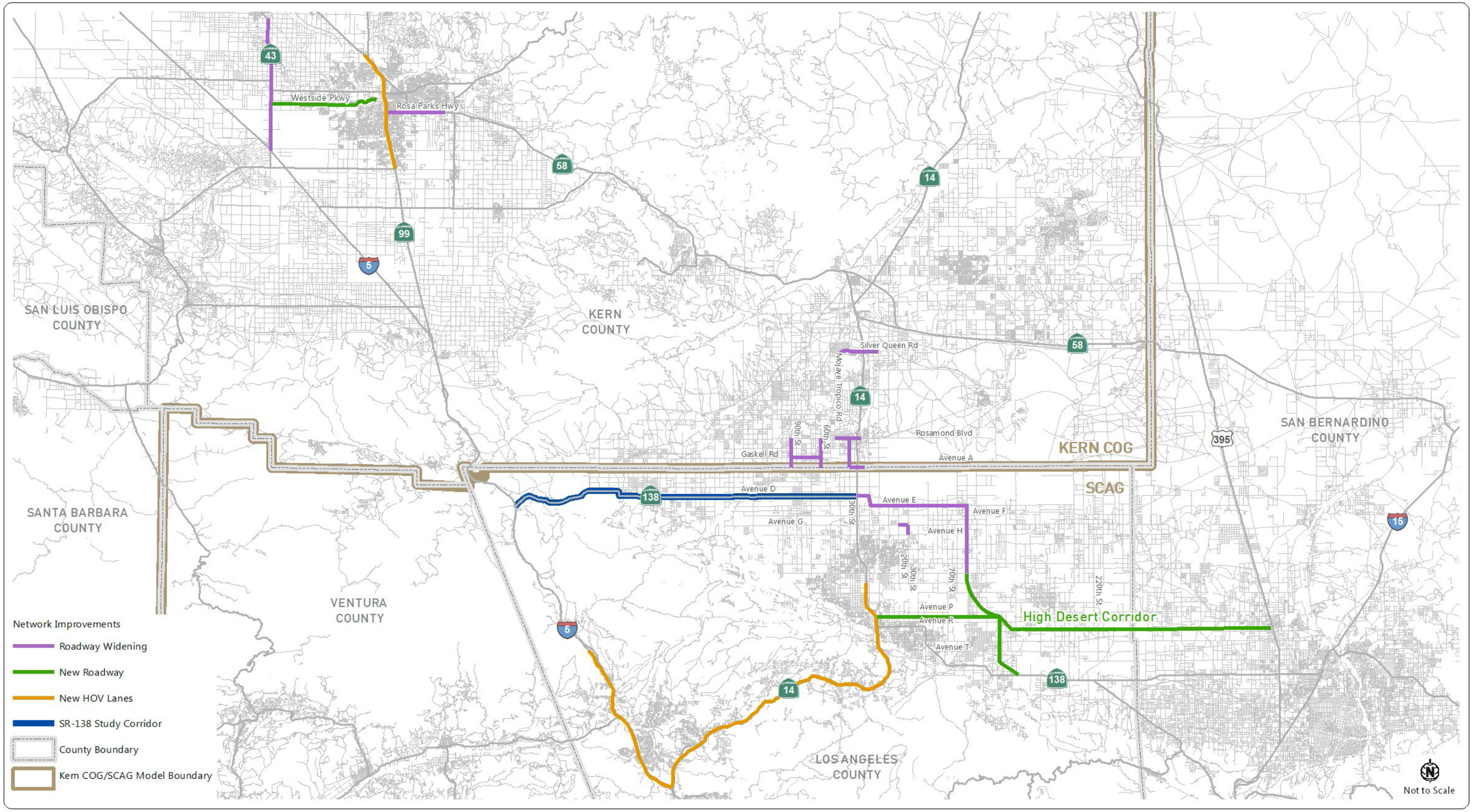

FEHR & PEERS

Path: N:\Jobs\Active\2500s\2599 - SR 138\Graphics\GIS\FromRosevile_6_13_13\GIS\MXD\SR138NetworkImprovements.mxd

Figure 4
Network Improvements in SCAG RTP and Kern COG Model Area: SR 138

ROADWAY NETWORK ENHANCEMENTS

The roadway network in northern Los Angeles County in the SCAG model was refined by reviewing the EAVTAM model and GIS street centerline network available for the area. All roadways, from collector and secondary roadways to major highways and freeways were included, and where appropriate, local streets were added.

Roadway segment attribute data such as the number of lanes, roadway classification, and travel speed were checked against field data provided by SCAG, as well as field data collected by Fehr & Peers along the SR-138 corridor. The following link attributes were verified to ensure the model matched observed data:

- Number of lanes
- Facility type (used to determine capacity)
- Free-flow travel speed (as compared to INRIX data sources)
- Centroid Connector Reconfiguration
- Travel modes allowed

Sub-area model roadway network plots are contained in Attachment B.

Centroid connectors typically represent local streets and determine how trips originating or terminating at TAZs access the collectors and arterials included in the roadway network. Therefore, the location, configuration, and number of centroid connectors have a significant impact on how traffic is assigned to the network. The majority of centroid connectors in the SCAG 2012 RTP model load traffic to the nearest intersection of collector or arterial roadways rather than at mid-block locations where local streets typically connect to collectors and arterials. To load trips onto the highway network at a more localized level, centroid connectors associated with TAZs within SR-138 Project Area were modified to load at mid-block locations.

5 Truck Travel

This section presents an inventory of relevant truck studies and data within the study area as well as a review of the SCAG Heavy Duty Truck (HDT) model. The HDT model estimates truck trip generation and distribution of the heavy duty trucks. The truck forecasts in the HDT model are integrated with the light and medium vehicles (autos) in the traffic assignment. The truck module in the SCAG regional model was used to forecast truck-trip demand in the SR-138 corridor.

TRUCK STUDIES, REPORTS AND DATA

The project team[1] compiled and reviewed goods movement studies and reports relevant to the study area as well as truck data in the study area. The collected reports and data were reviewed and used to evaluate the volume of truck traffic as well as its performance in the study area. Relevant documents and databases being reviewed are as follows:

1. 2008 North Los Angeles County Truck Study
2. 2011 Interstate 210 (I-210) Truck Origin and Destination Study
3. SR-58 Origin and Destination Truck Study
4. California Statewide Freight Forecasting Model (CSFFM)
5. Caltrans Weight-In-Motion Data
6. Caltrans Truck Count Book
7. Collection of additional vehicle classification counts in the study area

The inventory of truck studies and data were summarized by data source, data attributes, coverage, and data collection methodology. The complied data was then evaluated for usefulness, compatibility, and applicability for this study.

HEAVY DUTY TRUCK (HDT) MODEL REVIEW

The SCAG RTP model includes a separate set of procedures for forecasting Heavy-Duty Truck (HDT) traffic, which is comprised of three major components:

[1] AFSHA Consulting, Inc. has provided the background truck information for use in this report.

- **Internal HDT Model** – The internal HDT model consist of trip generation and trip distribution of intra-regional truck trips using procedures similar to those used to generate and distribute person trips. The HDT model forecasts heavy duty trucks in the following three Gross Vehicle Weight (GVW) categories:
    - Light-Heavy (LH) duty trucks (8,500 to 14,000 lbs. Gross Vehicle Weight)
    - Medium-Heavy (MH) duty trucks (14,001 to 33,000 lbs. Gross Vehicle Weight)
    - Heavy-Heavy (HH) duty trucks (more than 33,000 lbs. Gross Vehicle Weight)
- **External HDT Model** – The external HDT model incorporates trip generation and trip distribution of inter-regional truck trips based on commodity flow data. The model uses various factors developed from published and survey data to estimate daily truck trips from the annual tonnage flows.
- **Special Generators** – The HDT model special generators are as follows:
    - Ports of Long Beach and Los Angeles Truck Trips – The port truck trips are generated based on the Ports Transportation Analysis Model (PortsTAM).
    - Airport Truck Trips – The airport truck trips are generated by the SCAG aviation model for the LH, MH and HH duty trucks for all airports within the SCAG region. The airport truck trip tables are added to the regional heavy duty truck trip tables prior to the traffic assignment.

The HDT trips are combined with the auto trip matrices and assigned in a multi-vehicle class traffic assignment. The traffic assignment results are reported for six vehicle classes:

- Drive alone autos
- Shared ride (2 occupants) autos
- Shared ride (3+ occupants) autos
- Light heavy-duty trucks
- Medium heavy-duty trucks
- Heavy heavy-duty trucks

Since heavy duty trucks are prohibited along some roadways, truck prohibitions are incorporated in the model by using the "Truck Prohibition Flag" in the highway network. The truck prohibition flag are as follows:

- 0 - Trucks are not prohibited
- 1 - Trucks are prohibited

6 Model Validation

Model validation describes a model's performance in terms of how closely the model's output matches existing travel data in the base year. The extent to which model outputs match existing travel data validates the assumptions of the inputs. Traditionally, most model validation guidelines have focused on the performance of the trip assignment function in accurately assigning trips to the street network. This metric is called static validation, and it remains the most common means of measuring model accuracy.

SUBAREA MODEL UPDATES

The sub-area model development process involved merging portions of the SCAG 2012 RTP Model and the Kern COG model and performing modifications to the TAZ structure and roadway network. Key modifications to the sub-are model are listed below:

- Updated the base year roadway network to include greater detail within the study area, specifically Palmdale and Lancaster, consistent with the EAVTAM model. Inconsistencies in model coding were corrected using field observations.
- Added new TAZs in the study area and surrounding county to increase the level of detail and improve the loading of traffic from TAZs onto the transportation network.

STATIC VALIDATION

The 2010 California Regional Transportation Plan Guidelines, produced by the California Transportation Commission, contain the following specific static validation criteria and thresholds used to evaluate the performance of the Northwest 138 Sub-Area Model:

- *At least 75 percent of the roadway links for which counts are available should be within the maximum desirable deviation*, which ranges from approximately 15 to 60 percent depending on total volume (the larger the volume, the less deviation is permitted).
- *A correlation coefficient of at least 0.88* - The correlation coefficient estimates the overall level of accuracy between observed traffic counts and the estimated traffic volumes from the model. This coefficient ranges from 0 to 1.0, where 1.0 indicates that the model perfectly fits the data.
- *The percent root mean square error (RMSE) below 40%* - The RMSE is the square root of the model volume minus the actual count squared, divided by the number of counts. It is a measure similar to standard deviation in that it assesses the accuracy of the model.

In addition to these criteria, the subarea model volume-to-count ratio was checked against a desired maximum threshold of no more than a 10 percent deviation. The validity of the subarea model was tested for 55 individual roadway segments in the study area under daily, am peak hour, and pm peak hour condi-

tions. A detailed discussion of the existing count data collection effort can be found in the Existing Conditions deliverable. Table 6 displays the results produced using the modified version of the model. Detailed model validation tables are contained in Attachment C.

TABLE 6 –RESULTS OF MODEL VALIDATION

Statistical Measure	Criterion of Acceptance	Model Results		
		Daily	AM Peak Hour	PM Peak Hour
Model Deviation	Within ± 10%	-5%	-3%	2%
Percent of Links with Volume-to-Count Ratios Within Caltrans Deviation Allowance	At Least 75%	87%	78%	78%
Correlation Coefficient	At Least 88%	98%	94%	95%
Percent Root Mean Square Error	40% or less	26%	36%	32%

Source: Fehr & Peers, 2014

The subarea model performed well within the study area, and passed all of the static tests. In general, the model generated volume estimates that closely matched roadway and freeway volumes. The largest differences occurred on low volume roadways and locations within gridded roadway networks. This result is not unexpected as models typically have difficultly replicating actual travel patterns on complex gridded roadway networks given the number of available routing options.

7 Preliminary Forecasts

The volume forecast process began by running the 2035 versions of the SCAG and Kern COG models and extracting the trip tables. The trip tables were then combined and used as inputs into the subarea model for assignment. The subarea network included all the planned transportation improvements previously identified. For the No Build alternative SR-138 was coded as a 2-Lane highway, consistent with its existing configuration.

Table 7 shows the Base Year, 2035 No Build, and 2040 No Build roadway model volumes for study locations along SR-138, I-5 and SR-14 in the study area. The 2040 volumes were derived by extrapolating the 2035 volume forecasts. This process presumes a linear growth from 2035 to 2040. One of the potential limitations of this approach is that, as we have seen in recent years, growth has not kept pace with the projected linear growth rate. However, this approach is generally conservative and is deemed acceptable for the purpose of designing and evaluation project alternatives. The preliminary forecasts represent volumes directly from the subarea model and have not been adjusted for any anomalies such as unexpected decreases in traffic volumes when compared to existing conditions.

TABLE 7 – PRELIMINARY NORTHWEST 138 SUB-AREA MODEL FORECASTS

Location	Subarea Model Volume		
	2012	2035 No Build	2040 No Build
I-5 North of SR138	70,600	103,900	111,100
I-5 South of SR138	67,900	109,000	117,900
SR-138 at I-5	4,500	31,200	37,000
SR-138 at 300th Street	4,500	25,400	29,900
SR-138 at 245th Street	4,000	19,900	23,400
SR-138 at 190th Street	3,500	16,500	19,300
SR-138 at 110th Street	3,700	15,700	18,300
SR-138 at 60th Street	3,800	15,400	17,900
SR-138 West of SR14	3,800	15,100	17,600
SR14 North of SR138	44,300	59,700	63,000
SR14 South of SR138	46,400	62,700	66,200

Source: Fehr & Peers, 2014

Forecasts for the project alternatives will be reported as a separate deliverable for review by the project team. Detailed truck forecasts will also be included as part of this deliverable.

Attachment A: SCAG Land Use by TAZ

Lancaster Land Use Summary by TAZ									
	2012			2035			Growth		
TAZ	Pop	HH	Emp	Pop	HH	Emp	Pop	HH	Emp
20291500	126	40	0	208	61	1	82	21	1
20291600	1593	548	10	1811	603	11	218	55	1
20291400	4	2	0	20	6	0	16	4	0
20291900	16	5	0	27	10	0	11	5	0
20292100	33	11	0	85	29	0	52	18	0
20292800	34	11	4	75	26	5	41	15	1
20289500	18	6	0	60	18	0	42	12	0
20289600	25	8	0	44	16	0	19	8	0
20298100	3	1	0	3	1	0	0	0	0
20298200	13	4	1	16	5	1	3	1	0
20298300	9	3	0	10	3	0	1	0	0
20298400	3	1	22	3	1	23	0	0	1
20298700	22	7	0	26	8	0	4	1	0
20298600	3	1	59	3	1	63	0	0	4
20298500	9	3	0	10	3	0	1	0	0
20299100	31	10	26	40	14	29	9	4	3
20299400	28	9	0	28	11	3	0	2	3
20299200	3	1	229	3	1	253	0	0	24
20299300	0	0	847	0	0	925	0	0	78
20310200	2	1	3	30	15	12	28	14	9
20316500	3	1	33	3	1	36	0	0	3
20310400	0	0	156	0	0	175	0	0	19
20299800	600	238	17	710	269	19	110	31	2
20299900	0	0	0	0	0	0	0	0	0
20306100	4723	1273	216	5663	1459	240	940	186	24
20306200	3825	1063	148	5351	1423	164	1526	360	16
20312100	3107	862	512	3960	1051	551	853	189	39
20320100	13	4	823	20	6	896	7	2	73
20320200	638	182	244	1034	283	268	396	101	24
20320300	1602	462	21	2413	665	23	811	203	2
20320400	2545	851	66	2986	955	73	441	104	7
20323200	1700	452	14	2081	529	15	381	77	1
20326100	2165	628	18	2424	671	19	259	43	1
20326200	461	206	18	702	301	20	241	95	2
20330400	1478	535	20	1735	600	20	257	65	0
20330300	436	154	17	657	224	21	221	70	4
20330100	305	106	24	348	117	25	43	11	1
20330600	15	5	51	36	13	54	21	8	3
20330900	9	3	98	18	6	104	9	3	6
20331100	30	10	0	65	19	0	35	9	0
20333100	15	5	0	40	16	0	25	11	0
20333300	63	22	0	82	32	0	19	10	0
20333400	2	1	68	15	5	73	13	4	5
20333200	6	2	1	21	7	2	15	5	1

Lancaster Land Use Summary by TAZ									
	2012			2035			Growth		
TAZ	Pop	HH	Emp	Pop	HH	Emp	Pop	HH	Emp
20333600	55	19	16	76	29	29	21	10	13
20335200	24	8	0	108	36	0	84	28	0
20333500	15	5	14	40	13	15	25	8	1
20327200	268	73	6	296	77	6	28	4	0
20327100	9	3	13	19	6	14	10	3	1
20321400	868	232	3	1109	283	3	241	51	0
20321600	691	187	0	774	200	1	83	13	1
20321500	397	111	1121	547	146	1235	150	35	114
20321700	303	89	1373	460	129	1513	157	40	140
20315300	60	21	2004	64	22	2194	4	1	190
20307400	25	12	1141	36	17	1245	11	5	104
20307500	258	126	115	335	157	117	77	31	2
20302500	383	111	14	448	124	15	65	13	1
20302400	15	5	161	27	9	164	12	4	3
20302100	990	322	112	1266	393	122	276	71	10
20356100	1606	487	19	1744	505	19	138	18	0
20303600	1394	423	9	1965	570	8	571	147	-1
20303300	1907	532	86	2663	710	74	756	178	-12
20302200	552	161	13	643	179	14	91	18	1
20302300	275	80	21	353	98	21	78	18	0
20303400	1368	509	462	1903	677	507	535	168	45
20303500	1375	521	8	1904	690	9	529	169	1
20307300	2087	940	595	2546	1101	652	459	161	57
20315200	637	265	204	709	282	220	72	17	16
20323100	2830	791	27	3920	1047	32	1090	256	5
20323400	1711	571	968	2611	833	1065	900	262	97
20322200	4031	1140	176	5633	1525	193	1602	385	17
20321300	1498	406	90	2375	615	99	877	209	9
20321200	1915	537	1893	2704	726	2065	789	189	172
20309100	1577	421	37	2223	569	42	646	148	5
20309300	1486	263	1414	1729	313	1556	243	50	142
20308100	792	302	5276	1071	404	5710	279	102	434
20308300	817	361	780	933	394	844	116	33	64
20308400	6	2	1319	7	2	1460	1	0	141
20303200	2002	795	427	2455	935	466	453	140	39
20307100	1632	717	211	2298	964	233	666	247	22
20307200	0	0	1695	0	0	1854	0	0	159
20315100	2328	970	479	2964	1180	517	636	210	38
20321100	0	0	268	0	0	294	0	0	26
20305400	875	271	131	1250	371	146	375	100	15
20305100	0	0	450	0	0	507	0	0	57
20304200	1646	517	364	1862	558	394	216	41	30
20304100	2656	859	146	3753	1162	129	1097	303	-17
20305200	1749	555	32	2452	743	27	703	188	-5

Lancaster Land Use Summary by TAZ									
	2012			2035			Growth		
TAZ	Pop	HH	Emp	Pop	HH	Emp	Pop	HH	Emp
20304300	1222	414	378	1504	487	418	282	73	40
20305300	0	0	1492	0	0	1618	0	0	126
20317200	2564	653	330	3598	875	362	1034	222	32
20319200	4672	1298	606	6568	1746	660	1896	448	54
20318100	2063	554	667	5253	1394	907	3190	840	240
20309200	1241	389	526	1746	523	580	505	134	54
20313100	2256	1180	1699	4329	2182	2220	2073	1002	521
20317100	1219	361	874	3153	892	1205	1934	531	331
20314100	4840	1534	2035	6200	1878	2196	1360	344	161
20308200	808	351	1131	1197	497	1239	389	146	108
20313200	1890	561	2634	3770	1419	3857	1880	858	1223
20319100	0	0	658	0	0	711	0	0	53
20308500	1613	765	634	1952	883	691	339	118	57
20309400	1195	365	891	1888	552	975	693	187	84
20323300	1920	587	182	2823	829	200	903	242	18
20322100	1486	428	259	1896	523	280	410	95	21
20319300	1594	453	90	2035	553	98	441	100	8
20322300	2587	733	38	3598	974	42	1011	241	4
20318200	1589	430	51	2231	578	56	642	148	5
20328500	2138	527	26	2722	642	29	584	115	3
20328600	485	121	9	636	152	10	151	31	1
20328800	2835	706	220	3169	754	205	334	48	-15
20328700	323	80	0	429	102	0	106	22	0
20326300	888	257	12	1129	312	13	241	55	1
20328300	206	52	5	404	97	7	198	45	2
20326400	656	294	106	837	358	115	181	64	9
20330500	2	1	59	50	15	66	48	14	7
20328200	943	330	3	1194	399	4	251	69	1
20328100	779	345	16	1113	471	19	334	126	3
20326600	1291	374	10	1472	407	11	181	33	1
20328400	2822	866	19	3714	1089	19	892	223	0
20326500	1061	307	18	1205	333	19	144	26	1
20330800	491	123	5	532	129	5	41	6	0
20299500	16	5	0	25	9	2	9	4	2
20299700	6	2	165	7	2	182	1	0	17
20299600	65	22	1	107	34	1	42	12	0
20295100	5615	0	988	5911	0	1083	296	0	95
20296300	283	75	2	318	81	2	35	6	0
20296700	1039	275	3	1126	285	2	87	10	-1
20296400	123	32	2	166	41	2	43	9	0
20292500	6	2	1	57	17	1	51	15	0
20292700	9	3	1981	18	6	2142	9	3	161
20292600	2998	865	107	3684	1016	119	686	151	12
20301500	1289	440	12	1639	534	16	350	94	4

Lancaster Land Use Summary by TAZ									
	2012			2035			Growth		
TAZ	Pop	HH	Emp	Pop	HH	Emp	Pop	HH	Emp
20301400	3356	921	99	4673	1226	90	1317	305	-9
20296100	34	11	0	81	20	0	47	9	0
20301100	2	1	1	13	4	4	11	3	3
20301200	576	156	5	644	167	5	68	11	0
20301300	786	213	25	864	224	21	78	11	-4
20296200	15	5	1	51	12	1	36	7	0
20296500	1861	491	24	2011	507	25	150	16	1
20296600	1020	269	19	1120	282	20	100	13	1
20296800	874	230	4	941	237	4	67	7	0
20296900	1056	280	3	1126	289	3	70	9	0
20301600	527	144	270	661	173	265	134	29	-5
20303100	2384	772	193	3022	935	208	638	163	15
20297100	752	310	20	776	327	20	24	17	0
20294100	375	113	14	404	121	15	29	8	1
20294200	588	176	65	597	185	69	9	9	4
20294300	1023	276	56	1161	299	59	138	23	3
20294500	1945	515	110	2176	562	117	231	47	7
20291800	3360	1156	172	3727	1370	178	367	214	6
20291700	1310	452	556	1406	501	577	96	49	21
20291300	1451	419	23	1928	532	28	477	113	5
20291200	9	3	3	24	8	4	15	5	1
20291100	40	12	66	64	18	67	24	6	1
20292900	24	8	0	60	20	0	36	12	0
20292400	37	12	1	86	32	2	49	20	1
20293600	37	12	2	88	29	2	51	17	0
20293400	34	11	0	54	19	0	20	8	0
20289700	21	7	88	55	18	96	34	11	8
20289400	185	58	1	274	97	7	89	39	6
20289300	3	1	0	13	5	0	10	4	0
20289100	6	2	0	12	4	0	6	2	0

Palmdale Land Use Summary by TAZ									
	2012			2035			Growth		
TAZ	Pop	HH	Emp	Pop	HH	Emp	Pop	HH	Emp
20288400	459	151	37	709	236	47	250	85	10
20288500	968	320	28	1229	411	36	261	91	8
20288600	518	171	65	724	242	75	206	71	10
20288700	134	45	3	130	46	15	-4	1	12
20325100	0	0	23	0	0	58	0	0	35
20325200	0	0	18	0	0	81	0	0	63
20325300	0	0	7	0	0	36	0	0	29
20325400	103	53	14	103	53	77	0	0	63
20331200	18	5	17	22	6	20	4	1	3
20333700	11	3	0	14	4	0	3	1	0
20333800	7	2	0	11	3	8	4	1	8
20333900	4	1	0	4	1	0	0	0	0
20335400	0	0	0	24	8	0	24	8	0
20335500	8	2	0	22	7	0	14	5	0
20335600	0	0	0	12	6	0	12	6	0
20350100	27	8	20	40	11	23	13	3	3
20350200	0	0	0	0	0	0	0	0	0
20350300	0	0	0	0	0	4	0	0	4
20350400	0	0	0	0	0	0	0	0	0
20350500	6	2	0	5	2	0	-1	0	0
20350600	0	0	0	0	0	2	0	0	2
20352100	2706	894	169	3318	1109	215	612	215	46
20352200	1833	546	227	2697	813	258	864	267	31
20352300	1393	474	120	2020	696	145	627	222	25
20353500	936	324	8	1204	422	8	268	98	0
20354200	25	7	0	60	15	0	35	8	0
20354300	12	3	3	37	11	3	25	8	0
20354400	720	184	20	751	194	28	31	10	8
20354500	4	1	0	4	1	0	0	0	0
20354600	1755	478	13	2192	604	21	437	126	8
20354700	4	1	0	4	1	0	0	0	0
20354800	1134	288	8	1390	357	9	256	69	1
20355100	1631	513	478	1788	569	534	157	56	56
20355200	6278	1974	525	8553	2721	578	2275	747	53
20355300	1105	348	723	1586	505	683	481	157	-40
20355400	1452	457	21	1958	624	23	506	167	2
20358100	2	1	30	58	17	38	56	16	8
20358200	964	261	5	1250	343	4	286	82	-1
20358300	1289	349	11	1386	380	11	97	31	0
20358400	596	155	1	785	206	1	189	51	0
20358500	1640	444	11	2127	583	11	487	139	0
20358600	308	83	135	415	113	168	107	30	33
20358700	955	259	4	1255	344	4	300	85	0
20359300	192	59	412	172	59	452	-20	0	40

Palmdale Land Use Summary by TAZ									
	2012			2035			Growth		
TAZ	Pop	HH	Emp	Pop	HH	Emp	Pop	HH	Emp
20360200	11	3	1367	14	4	2014	3	1	647
20361100	0	0	2567	17	5	3474	17	5	907
20361200	272	74	4	621	171	5	349	97	1
20361300	2202	573	19	2774	730	28	572	157	9
20361400	915	238	385	1149	302	474	234	64	89
20361500	1307	375	297	1640	495	354	333	120	57
20361600	1953	562	176	2135	693	192	182	131	16
20362100	2164	761	182	2735	983	257	571	222	75
20362200	174	49	249	176	49	316	2	0	67
20362300	0	0	105	0	0	115	0	0	10
20362400	28	8	219	28	8	213	0	0	-6
20362500	0	0	152	0	0	191	0	0	39
20362600	2900	1010	184	3671	1295	228	771	285	44
20362700	236	82	44	254	91	103	18	9	59
20364100	0	0	274	0	0	363	0	0	89
20364200	74	38	629	77	40	828	3	2	199
20365100	1645	601	1070	2405	889	1486	760	288	416
20365200	0	0	216	0	0	170	0	0	-46
20365300	0	0	1135	25	7	1241	25	7	106
20365400	32	8	658	125	29	757	93	21	99
20365500	619	141	236	2444	564	1121	1825	423	885
20365600	0	0	309	0	0	364	0	0	55
20365700	0	0	404	0	0	407	0	0	3
20365800	723	166	156	1080	256	676	357	90	520
20365900	442	162	212	531	197	343	89	35	131
20366100	0	0	29	0	0	33	0	0	4
20366200	2985	796	465	4494	1213	637	1509	417	172
20366300	405	113	321	655	187	454	250	74	133
20367100	43	12	28	51	15	51	8	3	23
20367200	714	174	554	979	241	695	265	67	141
20367300	1595	389	263	2027	500	336	432	111	73
20368100	1230	318	22	1611	422	80	381	104	58
20368200	2309	573	91	2997	752	114	688	179	23
20368300	643	159	207	875	219	271	232	60	64
20369100	640	281	696	953	423	989	313	142	293
20369200	1863	587	156	2819	899	214	956	312	58
20369300	720	316	1114	1070	475	1513	350	159	399
20369400	1676	509	455	2588	795	616	912	286	161
20370100	5797	1113	366	8674	1687	506	2877	574	140
20370200	2092	536	13	2720	706	13	628	170	0
20370300	913	238	593	2015	533	818	1102	295	225
20371100	1537	418	919	2321	639	1251	784	221	332
20371200	2176	651	269	3800	1151	378	1624	500	109
20372100	3295	1062	186	4364	1424	246	1069	362	60

Palmdale Land Use Summary by TAZ									
	2012			2035			Growth		
TAZ	Pop	HH	Emp	Pop	HH	Emp	Pop	HH	Emp
20372200	549	177	0	728	238	0	179	61	0
20372400	125	40	3	225	72	3	100	32	0
20374100	2226	621	38	2841	802	42	615	181	4
20374200	2777	766	322	3612	1008	408	835	242	86
20374300	1443	445	297	1947	608	373	504	163	76
20375100	0	0	2113	0	0	2911	0	0	798
20375200	0	0	6	0	0	7	0	0	1
20376100	1583	520	1069	2295	762	1466	712	242	397
20376200	2206	724	250	3209	1066	342	1003	342	92
20377100	1548	415	518	2427	660	704	879	245	186
20377200	521	135	342	1151	301	475	630	166	133
20377300	2053	504	124	3052	758	179	999	254	55
20377400	1896	443	23	2706	640	61	810	197	38
20378700	43	12	0	118	37	0	75	25	0
20379100	6105	1713	342	8724	2478	452	2619	765	110
20379200	5411	1547	175	6922	2002	223	1511	455	48
20380100	1908	562	96	2861	853	138	953	291	42
20380200	1831	588	16	2352	764	18	521	176	2
20380300	368	102	60	511	143	75	143	41	15
20380400	2377	610	30	3539	919	47	1162	309	17
20381100	1782	528	258	2649	794	362	867	266	104
20381200	2691	797	76	3876	1162	100	1185	365	24
20381300	2510	735	346	3824	1133	457	1314	398	111
20382100	2245	653	647	3157	930	805	912	277	158
20383100	0	0	217	0	0	264	0	0	47
20383200	0	0	6	7	3	69	7	3	63
20383900	0	0	8	5	3	94	5	3	86
20383300	0	0	1306	0	0	1627	0	0	321
20383400	0	0	1316	2	1	1602	2	1	286
20383500	682	243	720	4694	1805	3208	4012	1562	2488
20383600	7	2	418	17	5	646	10	3	228
20383700	403	141	130	694	246	355	291	105	225
20383800	150	53	38	131	53	180	-19	0	142
20384600	453	116	41	627	163	53	174	47	12
20384700	560	144	21	732	191	24	172	47	3
20384900	70	18	67	93	24	76	23	6	9
20385100	1635	398	12	2155	530	21	520	132	9
20385200	3489	850	77	5294	1306	105	1805	456	28
20385300	3237	810	246	4857	1230	344	1620	420	98
20386100	2916	643	93	4293	960	123	1377	317	30
20386200	2495	578	105	3161	742	136	666	164	31
20386300	1970	467	6	2443	586	11	473	119	5
20386400	2008	443	156	2877	642	168	869	199	12
20386500	1742	390	16	2190	496	17	448	106	1

Palmdale Land Use Summary by TAZ									
	2012			2035			Growth		
TAZ	Pop	HH	Emp	Pop	HH	Emp	Pop	HH	Emp
20386600	10	6	153	272	81	141	262	75	-12
20387100	19	5	76	74	23	98	55	18	22
20387200	4313	1093	828	5821	1493	1023	1508	400	195
20387300	16	9	0	121	36	5	105	27	5
20387400	21	6	4	88	23	5	67	17	1
20387500	655	166	4	801	205	8	146	39	4
20387600	328	80	79	567	141	112	239	61	33
20387700	7	2	9	11	3	18	4	1	9
20387800	0	0	77	0	0	98	0	0	21
20387900	22	12	0	184	54	4	162	42	4
20390300	7	2	1	29	9	13	22	7	12
20390400	7	2	5	12	3	6	5	1	1
20390500	0	0	0	0	0	0	0	0	0
20390600	0	0	0	12	6	9	12	6	9
20390700	0	0	0	3	2	0	3	2	0
20390800	582	119	42	1747	403	67	1165	284	25
20390900	12	4	0	39	15	0	27	11	0

Santa Clarita Land Use Summary by TAZ									
	2012			2035			Growth		
TAZ	Pop	HH	Emp	Pop	HH	Emp	Pop	HH	Emp
20245100	2613	1083	2692	3832	1619	3445	1219	536	753
20236400	1982	643	263	2861	944	312	879	301	49
20236300	697	220	22	1055	338	26	358	118	4
20236200	987	296	409	1388	427	534	401	131	125
20236100	1678	596	1280	2404	873	1507	726	277	227
20238100	1055	335	322	1473	475	428	418	140	106
20238200	1576	699	755	2237	1009	975	661	310	220
20234200	1108	365	120	1569	526	162	461	161	42
20234100	925	359	699	1040	414	941	115	55	242
20234300	2644	1018	1259	3839	1536	1628	1195	518	369
20234400	1668	623	160	2297	876	161	629	253	1
20232400	1299	569	2043	1887	841	2243	588	272	200
20257100	3219	1060	1688	4430	1488	2260	1211	428	572
20249100	977	314	5088	1435	470	5993	458	156	905
20237300	1657	535	583	2373	799	691	716	264	108
20237400	1784	696	2791	2606	1034	3278	822	338	487
20235500	387	275	6555	506	365	8594	119	90	2039
20235400	1226	426	501	1672	591	550	446	165	49
20232200	805	306	79	1149	445	242	344	139	163
20232300	1134	574	210	1574	811	248	440	237	38
20232100	1705	713	134	2343	997	172	638	284	38
20237100	0	0	5104	0	0	6674	0	0	1570
20235200	3714	1304	120	4001	1430	154	287	126	34
20237200	1894	841	17	2760	1247	17	866	406	0
20235300	1408	493	191	1936	690	324	528	197	133
20235100	2018	689	167	2807	975	166	789	286	-1
20249200	1796	607	62	2455	844	85	659	237	23
20235600	1135	481	1217	1720	741	1459	585	260	242
20231100	1034	503	676	1140	564	890	106	61	214
20240200	2617	859	128	3718	1245	150	1101	386	22
20244200	2093	477	310	3054	708	450	961	231	140
20240100	1387	564	560	1990	824	668	603	260	108
20252200	684	480	1013	1868	1334	1810	1184	854	797
20252100	1212	382	928	2027	650	1206	815	268	278
20242100	1055	533	712	1538	790	941	483	257	229
20242200	1689	523	199	2362	744	196	673	221	-3
20248200	2885	923	518	4096	1336	678	1211	413	160
20242300	1195	426	19	1678	608	23	483	182	4
20255100	2341	1120	602	3418	1665	818	1077	545	216
20251200	1386	351	573	1810	535	805	424	184	232
20251100	797	265	330	1320	447	413	523	182	83
20244500	1788	295	445	2643	443	478	855	148	33
20244700	2365	562	76	3255	787	150	890	225	74
20244600	3606	886	431	4872	1217	685	1266	331	254

Santa Clarita Land Use Summary by TAZ									
	2012			2035			Growth		
TAZ	Pop	HH	Emp	Pop	HH	Emp	Pop	HH	Emp
20244100	1457	365	895	2131	549	1175	674	184	280
20244300	3348	686	840	5276	1100	1366	1928	414	526
20244400	286	142	1245	424	214	2006	138	72	761
20245200	2392	794	1457	3543	1218	2020	1151	424	563
20260100	1153	360	190	1319	419	249	166	59	59
20260200	2619	876	1121	3649	1242	1318	1030	366	197
20260300	2712	1259	126	2811	1324	206	99	65	80
20267100	1542	661	601	2114	924	807	572	263	206
20274100	3688	1147	220	5231	1656	249	1543	509	29
20272100	3005	937	271	3968	1256	359	963	319	88
20268200	1480	539	610	2179	808	795	699	269	185
20269100	1738	555	76	2474	804	179	736	249	103
20263400	2022	609	884	2333	715	1194	311	106	310
20268100	2391	997	498	3412	1448	667	1021	451	169
20258100	2449	851	198	3446	1219	258	997	368	60
20257200	2020	728	56	3051	1119	125	1031	391	69
20254100	2604	731	2082	3851	1100	2772	1247	369	690
20255200	1978	1009	421	3200	1662	665	1222	653	244
20255300	690	289	592	1255	535	981	565	246	389
20263100	1392	672	1578	2412	1185	2634	1020	513	1056
20263300	2354	604	39	3382	883	42	1028	279	3
20261100	1209	305	158	1783	457	166	574	152	8
20258200	655	253	254	966	379	297	311	126	43
20261300	1630	448	557	2400	673	658	770	225	101
20261200	633	155	1009	1133	282	1803	500	127	794
20263200	1347	278	238	1961	412	305	614	134	67
20256100	5834	1896	83	6376	2084	114	542	188	31
20252300	2447	611	197	3738	950	284	1291	339	87
20259100	2867	796	591	4108	1160	698	1241	364	107
20253200	1496	523	356	2068	740	434	572	217	78
20253300	1854	595	458	2585	845	461	731	250	3
20253100	3744	1095	69	5250	1562	70	1506	467	1
20248100	1406	418	125	2035	616	134	629	198	9
20246100	1607	578	42	2261	828	43	654	250	1
20246200	361	140	259	508	199	335	147	59	76
20250100	1613	653	173	2229	915	225	616	262	52
20239100	3581	1340	584	3860	1470	647	279	130	63
20239200	1380	433	17	1608	513	18	228	80	1
20243200	1682	499	50	2375	717	53	693	218	3
20241100	4726	1495	602	6522	2099	707	1796	604	105
20243100	1304	473	309	1837	680	427	533	207	118
20229200	515	172	13720	729	248	17942	214	76	4222
20233100	3573	1249	3164	4416	1580	3565	843	331	401
20231200	1304	392	2143	1531	468	2846	227	76	703

Santa Clarita Land Use Summary by TAZ									
	2012			2035			Growth		
TAZ	Pop	HH	Emp	Pop	HH	Emp	Pop	HH	Emp
20276100	2276	693	644	3259	1018	1108	983	325	464
20265100	5500	1721	827	6409	2012	951	909	291	124
20229100	3389	1147	9890	3548	1200	13384	159	53	3494
20247100	7165	1974	379	7767	2167	456	602	193	77
20277200	3160	1034	62	4849	1619	251	1689	585	189

Western & Central Economic Opportunity Area Land Use Summary by TAZ									
	2012			2035			Growth		
TAZ	Pop	HH	Emp	Pop	HH	Emp	Pop	HH	Emp
20280100	3508	1239	742	65264	22328	16605	61756	21089	15863
20298600	3	1	59	3	1	63	0	0	4
20298200	13	4	1	16	5	1	3	1	0
20298300	9	3	0	10	3	0	1	0	0
20298400	3	1	22	3	1	23	0	0	1
20298700	22	7	0	26	8	0	4	1	0

Attachment B: Roadway Network Plots

SR-138 2012 Subarea Model
Number of Lanes
0 .33 .67 1
Miles

SR-138 2035 No Build Subarea Model
Number of Lanes
0 .33 .67 1
Miles

Attachment C: Model Validation Results

Daily Model Validation

	Count	Location	Count Sum	Model Sum	Diff	Dev	Max	Test	Diff^2
WILTEC - RD	1	SR-138 Connector frm I-5 NB	660	475	-185	-28%	68%	PASS	34,408
	2	SR-138 Connector frm I-5 SB	1,195	1,709	514	43%	68%	PASS	263,738
	3	SR-138 Connector to I-5 NB	1,335	2,074	739	55%	63%	PASS	545,674
	4	SR-138 Connector to I-5 SB	675	440	-235	-35%	68%	PASS	55,194
	5	SR-138 East of Gorman Post	4,170	4,875	705	17%	52%	PASS	497,670
	6	SR-138 btw Gorman Post and Old Ridge	3,965	4,874	909	23%	52%	PASS	826,841
	7	SR-138 btw Old Ridge and 300th	3,130	4,804	1,674	53%	58%	PASS	2,800,957
	8	SR-138 btw 280th and 270th	3,370	4,854	1,484	44%	58%	PASS	2,202,976
	9	SR-138 btw Three Points and 245th	3,340	4,226	886	27%	58%	PASS	785,008
	10	SR-138 btw 230th and 190th	3,020	4,190	1,170	39%	58%	PASS	1,367,985
	11	SR-138 btw 190th and 130th	3,380	4,042	662	20%	58%	PASS	437,653
	12	SR-138 btw 130th and 80th	3,555	4,246	691	19%	58%	PASS	477,832
	13	SR-138 btw 80th and 30th	4,245	4,010	-235	-6%	52%	PASS	55,253
	14	SR-138 at SR-14	1,360	1,402	42	3%	63%	PASS	1,774
SCAG	15	165th St E Btwn E Avenue R & E Avenue S	787	747	-40	-5%	68%	PASS	1,617
	16	170th St E Btwn E Avenue R & E Avenue S	2,440	2,765	325	13%	63%	PASS	105,527
	17	Division St Btwn E Palmdale Blvd & E Avenue R	7,524	6,286	-1,238	-16%	41%	PASS	1,532,308
	18	5th St E btwn E Palmdale Blvd & E Avenue R	6,488	7,995	1,507	23%	44%	PASS	2,269,670
	19	6th St E Btwn E Palmdale Blvd & E Avenue R	3,541	1,516	-2,025	-57%	58%	PASS	4,101,215
	20	Sierra Highway Btwn E Palmdale Blvd & E Avenue R	9,853	9,319	-534	-5%	38%	PASS	284,703
	21	10th St E Btwn E Avenue Q11 & E Avenue R	5,498	3,847	-1,651	-30%	48%	PASS	2,724,386
	22	12th St E Btwn E Palmdale Ave & E Avenue R	1,236	1,078	-158	-13%	68%	PASS	24,979
	23	15th St E Btwn E Palmdale Ave & E Avenue R	1,552	3,960	2,408	155%	63%	FAIL	5,800,066
	24	20th St E Btwn E Palmdale Blvd & E Avenue R	12,481	4,782	-7,699	-62%	34%	FAIL	59,273,888
	25	35th St E Btwn E Palmdale Ave & E Avenue R	3,147	4,572	1,425	45%	58%	PASS	2,030,769
	26	47th St E Btwn E Palmdale Blvd & E Avenue R	20,173	17,669	-2,504	-12%	28%	PASS	6,270,673
	27	55th St E Btwn E Palmdale Blvd & E Avenue R	1,790	178	-1,612	-90%	63%	FAIL	2,599,693
	28	60th St Btwn E Palmdale Ave & E Avenue R	2,001	2,420	419	21%	63%	PASS	175,211
	29	70th St E Btwn E Palmdale Blvd & E Avenue S	4,834	5,615	781	16%	52%	PASS	609,821
	30	90th St E Btwn E Avenue R & E Avenue R	6,504	5,739	-765	-12%	44%	PASS	585,381
	31	100th St E Btwn E Avenue R & E Avenue R8	1,549	1,431	-118	-8%	63%	PASS	13,832
	32	110th ST E Btwn E Avenue R & E Avenue S	1,858	918	-940	-51%	63%	PASS	882,812
	33	Longview Rd Btwn E Avenue R & E Avenue S	400	220	-180	-45%	68%	PASS	32,248
	34	Avenue P Btwn 240th St E & County Line/260th St E	2,607	4,773	2,166	83%	58%	FAIL	4,692,162
	35	233rd St E Btwn Antelope Hwy Intersection & 263rd St E	5,428	9,307	3,879	71%	48%	FAIL	15,043,283
	36	W Ave E Btwn Sierra Hwy & Division St	2,725	1,536	-1,189	-44%	58%	PASS	1,414,447
	37	W Avenue G Btwn Sierra Hwy & Division St	1,491	5,201	3,710	249%	63%	FAIL	13,764,007
	38	W Avenue H Btwn Sierra Hwy & Division St	7,970	9,802	1,832	23%	41%	PASS	3,355,409
	39	E Avenue L Btwn Sierra Highway & Business Center Pkwy	26,226	19,397	-6,829	-26%	26%	FAIL	46,632,298
	40	E Avenue M Btwn Sierra Highway & 4th St E	24,771	19,538	-5,233	-21%	26%	PASS	27,384,067
	41	E Avenue Q Btwn Sierra Hwy & 9th St E	8,079	9,042	963	12%	41%	PASS	927,096
	42	E Avenue R Btwn Sierra Highway & 10th St E	17,726	18,739	1,013	6%	29%	PASS	1,025,804
	43	E Avenue S Btwn Sierra Highway & 10th St E	30,003	23,110	-6,893	-23%	24%	PASS	47,509,443
PEMS	4400	SR 58 Mainline VDS 615835 - E OF SR 184	15,681	13,597	-2,084	-13%	30%	PASS	4,342,608
	4500	SR 58 Mainline VDS 625835 - E OF SR 184	18,676	13,715	-4,961	-27%	29%	PASS	24,606,994
	4600	SR 58 Mainline VDS 615856 - W OF VINELAND RD	16,931	13,715	-3,216	-19%	29%	PASS	10,339,721
	4700	SR 58 Mainline VDS 625856 - W OF VINELAND RD	15,322	13,597	-1,725	-11%	30%	PASS	2,975,255
	5000	SR 99 Mainline VDS 619973 - N OF MCKEE RD	39,920	31,702	-8,218	-21%	22%	PASS	67,543,028
	5100	SR 99 Mainline VDS 629973 - N OF MCKEE RD	31,744	31,996	252	1%	24%	PASS	63,756
	5400	SR 99 Mainline VDS 619975 - BERKSHIRE RD	37,590	31,702	-5,888	-16%	22%	PASS	34,673,921
	5500	SR 99 Mainline VDS 629975 - BERKSHIRE RD	31,855	31,996	141	0%	24%	PASS	20,022
	5800	SR 99 Mainline VDS 619979 - S OF WHITE LN	42,095	41,166	-929	-2%	22%	PASS	862,141
	5900	SR 99 Mainline VDS 629979 - S OF WHITE LN	38,671	41,647	2,976	8%	22%	PASS	8,854,142
	6200	I5 Mainline VDS 716023 - TEMPLIN	32,800	33,731	931	3%	24%	PASS	867,345
	6300	IS Mainline VDS 759942 - TEMPLIN	32,090	37,509	5,419	17%	24%	PASS	29,360,763

METRIC	VALUE	REQ.	TEST
Model Deviation	-5%	+/- 10%	PASS
Meet Max Dev.	87%	> 75%	PASS
RMSE	26%	< 40%	PASS
Correlation	0.98	> 0.88	PASS

AM Peak Hour Model Validation

	Count	Location	Count Sum	Model Sum	Diff	Dev	Max	Test	Diff^2
WILTEC - RD	1	SR-138 Connector frm I-5 NB	40	13	-27	-68%	68%	PASS	744
	2	SR-138 Connector frm I-5 SB	55	111	56	102%	68%	FAIL	3,147
	3	SR-138 Connector to I-5 NB	85	115	30	35%	68%	PASS	894
	4	SR-138 Connector to I-5 SB	55	41	-14	-25%	68%	PASS	193
	5	SR-138 East of Gorman Post	255	296	41	16%	58%	PASS	1,676
	6	SR-138 btw Gorman Post and Old Ridge	250	296	46	18%	58%	PASS	2,106
	7	SR-138 btw Old Ridge and 300th	190	293	103	54%	63%	PASS	10,546
	8	SR-138 btw 280th and 270th	185	294	109	59%	63%	PASS	11,805
	9	SR-138 btw Three Points and 245th	180	256	76	42%	63%	PASS	5,754
	10	SR-138 btw 230th and 190th	170	254	84	50%	63%	PASS	7,102
	11	SR-138 btw 190th and 130th	175	245	70	40%	63%	PASS	4,882
	12	SR-138 btw 130th and 80th	180	256	76	42%	63%	PASS	5,817
	13	SR-138 btw 80th and 30th	235	244	9	4%	63%	PASS	80
	14	SR-138 at SR-14	75	96	21	28%	68%	PASS	445
SCAG	15	165th St E Btwn E Avenue R & E Avenue S	48	51	3	5%	68%	PASS	7
	16	170th St E Btwn E Avenue R & E Avenue S	132	166	34	26%	63%	PASS	1,186
	17	Division St Btwn E Palmdale Blvd & E Avenue R	428	412	-16	-4%	52%	PASS	254
	18	5th St E btwn E Palmdale Blvd & E Avenue R	297	470	173	58%	58%	FAIL	29,925
	19	6th St E Btwn E Palmdale Blvd & E Avenue R	209	87	-122	-58%	63%	PASS	14,794
	20	Sierra Highway Btwn E Palmdale Blvd & E Avenue R	612	661	49	8%	48%	PASS	2,420
	21	10th St E Btwn E Avenue Q11 & E Avenue R	305	226	-79	-26%	58%	PASS	6,308
	22	12th St E Btwn E Palmdale Ave & E Avenue R	75	58	-17	-23%	68%	PASS	303
	23	15th St E Btwn E Palmdale Ave & E Avenue R	110	222	112	102%	68%	FAIL	12,569
	24	20th St E Btwn E Palmdale Blvd & E Avenue R	1,028	325	-703	-68%	36%	FAIL	493,654
	25	35th St E Btwn E Palmdale Ave & E Avenue R	242	289	47	19%	63%	PASS	2,213
	26	47th St E Btwn E Palmdale Blvd & E Avenue R	1,140	1,101	-39	-3%	34%	PASS	1,501
	27	55th St E Btwn E Palmdale Blvd & E Avenue R	95	12	-83	-87%	68%	FAIL	6,845
	28	60th St Btwn E Palmdale Ave & E Avenue R	229	165	-64	-28%	63%	PASS	4,097
	29	70th St E Btwn E Palmdale Blvd & E Avenue S	1,034	389	-645	-62%	36%	FAIL	416,385
	30	90th St E Btwn E Avenue R & E Avenue R	435	404	-31	-7%	52%	PASS	948
	31	100th St E Btwn E Avenue R & E Avenue R8	204	120	-84	-41%	63%	PASS	6,986
	32	110th ST E Btwn E Avenue R & E Avenue S	283	64	-219	-77%	58%	FAIL	47,793
	33	Longview Rd Btwn E Avenue R & E Avenue S	28	18	-10	-35%	68%	PASS	97
	34	Avenue P Btwn 240th St E & County Line/260th St E	182	338	156	86%	63%	FAIL	24,309
	35	233rd St E Btwn Antelope Hwy Intersection & 263rd St E	231	574	343	148%	63%	FAIL	117,453
	36	W Ave E Btwn Sierra Hwy & Division St	185	96	-89	-48%	63%	PASS	7,874
	37	W Avenue G Btwn Sierra Hwy & Division St	101	397	296	293%	68%	FAIL	87,582
	38	W Avenue H Btwn Sierra Hwy & Division St	572	521	-51	-9%	48%	PASS	2,604
	39	E Avenue L Btwn Sierra Highway & Business Center Pkwy	1,734	1,198	-536	-31%	29%	FAIL	287,445
	40	E Avenue M Btwn Sierra Highway & 4th St E	1,694	1,416	-278	-16%	29%	PASS	77,413
	41	E Avenue Q Btwn Sierra Hwy & 9th St E	397	566	169	43%	52%	PASS	28,543
	42	E Avenue R Btwn Sierra Highway & 10th St E	1,154	1,325	171	15%	34%	PASS	29,258
	43	E Avenue S Btwn Sierra Highway & 10th St E	1,993	1,510	-483	-24%	28%	PASS	233,086
PEMS	4400	SR 58 Mainline VDS 615835 - E OF SR 184	664	546	-118	-18%	44%	PASS	13,829
	4500	SR 58 Mainline VDS 625835 - E OF SR 184	854	676	-178	-21%	41%	PASS	31,705
	4600	SR 58 Mainline VDS 615856 - W OF VINELAND RD	737	676	-60	-8%	44%	PASS	3,619
	4700	SR 58 Mainline VDS 625856 - W OF VINELAND RD	738	546	-192	-26%	44%	PASS	37,008
	5000	SR 99 Mainline VDS 619973 - N OF MCKEE RD	1,702	1,494	-208	-12%	29%	PASS	43,190
	5100	SR 99 Mainline VDS 629973 - N OF MCKEE RD	1,385	1,478	92	7%	31%	PASS	8,501
	5400	SR 99 Mainline VDS 619975 - BERKSHIRE RD	1,573	1,494	-79	-5%	30%	PASS	6,213
	5500	SR 99 Mainline VDS 629975 - BERKSHIRE RD	1,382	1,478	96	7%	31%	PASS	9,178
	5800	SR 99 Mainline VDS 619979 - S OF WHITE LN	2,221	2,067	-154	-7%	27%	PASS	23,741
	5900	SR 99 Mainline VDS 629979 - S OF WHITE LN	1,547	1,661	114	7%	30%	PASS	13,075
	6200	I5 Mainline VDS 716023 - TEMPLIN	1,720	1,947	227	13%	29%	PASS	51,486
	6300	IS Mainline VDS 759942 - TEMPLIN	1,700	2,350	650	38%	29%	FAIL	423,138

METRIC	VALUE	REQ.	TEST
Model Deviation	-3%	+/- 10%	PASS
Meet Max Dev.	78%	> 75%	PASS
RMSE	36%	< 40%	PASS
Correlation	0.94	> 0.88	PASS

PM Peak Hour Model Validation									
	Count	Location	Count Sum	Model Sum	Diff	Dev	Max	Test	Diff^2
WILTEC - RD	1	SR-138 Connector frm I-5 NB	40	55	15	37%	68%	PASS	221
	2	SR-138 Connector frm I-5 SB	105	123	18	17%	68%	PASS	336
	3	SR-138 Connector to I-5 NB	90	175	85	95%	68%	FAIL	7,242
	4	SR-138 Connector to I-5 SB	30	28	-2	-8%	68%	PASS	5
	5	SR-138 East of Gorman Post	310	396	86	28%	58%	PASS	7,330
	6	SR-138 btw Gorman Post and Old Ridge	270	395	125	46%	58%	PASS	15,745
	7	SR-138 btw Old Ridge and 300th	225	389	164	73%	63%	FAIL	27,035
	8	SR-138 btw 280th and 270th	235	395	160	68%	63%	FAIL	25,623
	9	SR-138 btw Three Points and 245th	245	347	102	42%	63%	PASS	10,475
	10	SR-138 btw 230th and 190th	210	344	134	64%	63%	FAIL	17,896
	11	SR-138 btw 190th and 130th	230	331	101	44%	63%	PASS	10,161
	12	SR-138 btw 130th and 80th	260	346	86	33%	58%	PASS	7,469
	13	SR-138 btw 80th and 30th	355	333	-22	-6%	58%	PASS	474
	14	SR-138 at SR-14	100	139	39	39%	68%	PASS	1,542
SCAG	15	165th St E Btwn E Avenue R & E Avenue S	56	94	38	67%	68%	PASS	1,428
	16	170th St E Btwn E Avenue R & E Avenue S	181	81	-100	-55%	63%	PASS	9,932
	17	Division St Btwn E Palmdale Blvd & E Avenue R	551	537	-14	-3%	48%	PASS	205
	18	5th St E btwn E Palmdale Blvd & E Avenue R	488	650	162	33%	52%	PASS	26,367
	19	6th St E Btwn E Palmdale Blvd & E Avenue R	271	111	-160	-59%	58%	FAIL	25,667
	20	Sierra Highway Btwn E Palmdale Blvd & E Avenue R	740	867	127	17%	44%	PASS	16,250
	21	10th St E Btwn E Avenue Q11 & E Avenue R	381	303	-78	-21%	52%	PASS	6,131
	22	12th St E Btwn E Palmdale Ave & E Avenue R	96	77	-19	-20%	68%	PASS	359
	23	15th St E Btwn E Palmdale Ave & E Avenue R	110	258	148	135%	68%	FAIL	22,019
	24	20th St E Btwn E Palmdale Blvd & E Avenue R	980	385	-595	-61%	38%	FAIL	353,961
	25	35th St E Btwn E Palmdale Ave & E Avenue R	217	387	170	78%	63%	FAIL	28,882
	26	47th St E Btwn E Palmdale Blvd & E Avenue R	1,475	1,293	-182	-12%	31%	PASS	32,971
	27	55th St E Btwn E Palmdale Blvd & E Avenue R	123	16	-107	-87%	68%	FAIL	11,459
	28	60th St Btwn E Palmdale Ave & E Avenue R	138	166	28	20%	63%	PASS	764
	29	70th St E Btwn E Palmdale Blvd & E Avenue S	339	494	155	46%	58%	PASS	23,939
	30	90th St E Btwn E Avenue R & E Avenue R	488	463	-25	-5%	52%	PASS	618
	31	100th St E Btwn E Avenue R & E Avenue R8	116	132	16	13%	68%	PASS	244
	32	110th ST E Btwn E Avenue R & E Avenue S	139	57	-82	-59%	63%	PASS	6,655
	33	Longview Rd Btwn E Avenue R & E Avenue S	41	16	-25	-62%	68%	PASS	640
	34	Avenue P Btwn 240th St E & County Line/260th St E	178	737	559	314%	63%	FAIL	312,780
	35	233rd St E Btwn Antelope Hwy Intersection & 263rd St E	391	680	289	74%	52%	FAIL	83,578
	36	W Ave E Btwn Sierra Hwy & Division St	275	158	-117	-43%	58%	PASS	13,660
	37	W Avenue G Btwn Sierra Hwy & Division St	107	564	457	427%	68%	FAIL	208,784
	38	W Avenue H Btwn Sierra Hwy & Division St	560	695	135	24%	48%	PASS	18,102
	39	E Avenue L Btwn Sierra Highway & Business Center Pkwy	2,023	1,478	-545	-27%	28%	PASS	296,580
	40	E Avenue M Btwn Sierra Highway & 4th St E	1,751	1,834	83	5%	29%	PASS	6,905
	41	E Avenue Q Btwn Sierra Hwy & 9th St E	645	763	118	18%	44%	PASS	13,997
	42	E Avenue R Btwn Sierra Highway & 10th St E	1,446	1,703	257	18%	31%	PASS	65,951
	43	E Avenue S Btwn Sierra Highway & 10th St E	2,267	1,924	-343	-15%	27%	PASS	117,455
PEMS	4400	SR 58 Mainline VDS 615835 - E OF SR 184	1,008	987	-20	-2%	36%	PASS	418
	4500	SR 58 Mainline VDS 625835 - E OF SR 184	1,190	810	-381	-32%	34%	PASS	144,872
	4600	SR 58 Mainline VDS 615856 - W OF VINELAND RD	1,086	810	-277	-25%	36%	PASS	76,519
	4700	SR 58 Mainline VDS 625856 - W OF VINELAND RD	1,060	987	-73	-7%	36%	PASS	5,284
	5000	SR 99 Mainline VDS 619973 - N OF MCKEE RD	2,735	2,051	-684	-25%	25%	PASS	467,763
	5100	SR 99 Mainline VDS 629973 - N OF MCKEE RD	1,788	2,013	225	13%	29%	PASS	50,652
	5400	SR 99 Mainline VDS 619975 - BERKSHIRE RD	2,588	2,051	-537	-21%	26%	PASS	288,296
	5500	SR 99 Mainline VDS 629975 - BERKSHIRE RD	1,788	2,013	225	13%	29%	PASS	50,652
	5800	SR 99 Mainline VDS 619979 - S OF WHITE LN	2,624	2,507	-116	-4%	26%	PASS	13,513
	5900	SR 99 Mainline VDS 629979 - S OF WHITE LN	2,555	2,847	292	11%	26%	PASS	85,398
	6200	I5 Mainline VDS 716023 - TEMPLIN	1,948	2,301	353	18%	28%	PASS	124,445
	6300	IS Mainline VDS 759942 - TEMPLIN	2,026	2,433	407	20%	28%	PASS	165,988

METRIC	VALUE	REQ.	TEST
Model Deviation	2%	+/- 10%	PASS
Meet Max Dev.	78%	> 75%	PASS
RMSE	32%	< 40%	PASS
Correlation	0.95	> 0.88	PASS

Appendix B – Count Sheets

WILTEC

Phone: (626) 564-1944 Fax: (626) 564-0969 info@wiltecusa.com

INTERSECTION CAR/PED/BIKE TRAFFIC COUNT RESULTS SUMMARY

CLIENT:		AFSHA CONSULTING
PROJECT:		LANCASTER/LEBEC TRAFFIC COUNTS
DATE:		WEDNESDAY DECEMBER 11, 2013
PERIOD:		6:30 AM TO 8:30 AM
INTERSECTION:	N/S	GORMAN POST ROAD
	E/W	SR-138/LANCASTER ROAD
CITY:		LEBEC

VEHICLE COUNTS

15 MIN COUNTS	1	2	3	4	5	6	7	8	9	10	11	12/12U	
PERIOD	SBRT	SBTH	SBLT	WBRT	WBTH	WBLT	NBRT	NBTH	NBLT	EBRT	EBTH	EBLT	TOTAL
630-645	0	0	3	1	24	0	0	0	0	0	33	0	61
645-700	0	0	11	0	15	0	0	0	0	0	21	2	49
700-715	1	0	1	4	24	0	0	0	0	0	34	1	65
715-730	0	0	0	1	29	0	0	0	0	0	22	0	52
730-745	0	0	1	2	28	0	0	0	0	0	22	0	53
745-800	0	0	0	1	27	0	0	0	0	0	16	0	44
800-815	0	0	0	0	28	0	0	0	0	0	10	2	40
815-830	0	0	0	2	16	1	0	0	0	0	18	1	38
HOUR TOTALS	1	2	3	4	5	6	7	8	9	10	11	12/12U	
PERIOD	SBRT	SBTH	SBLT	WBRT	WBTH	WBLT	NBRT	NBTH	NBLT	EBRT	EBTH	EBLT	TOTAL
630-730	1	0	15	6	92	0	0	0	0	0	110	3	227
645-745	1	0	13	7	96	0	0	0	0	0	99	3	219
700-800	1	0	2	8	108	0	0	0	0	0	94	1	214
715-815	0	0	1	4	112	0	0	0	0	0	70	2	189
730-830	0	0	1	5	99	1	0	0	0	0	66	3	175

PEAK HOUR
630-730
PEAK HOUR FACTOR
0.87

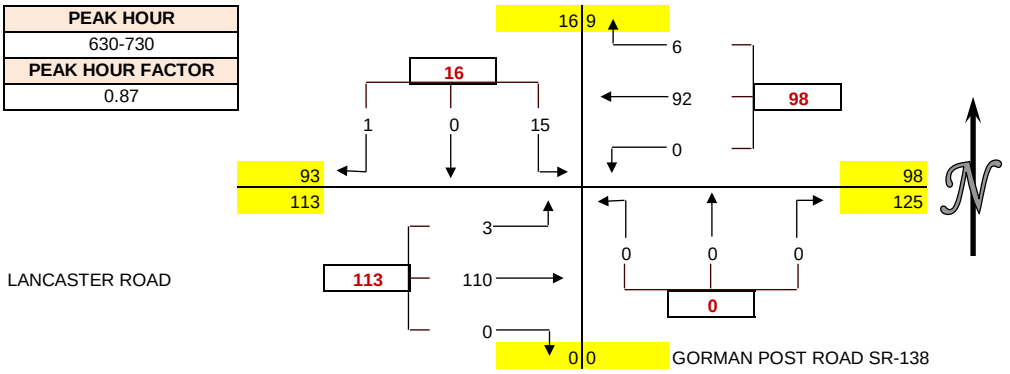

PEDESTRIAN COUNTS

15 MIN COUNTS	NORTH	EAST	SOUTH	WEST	TOTAL
PERIOD	LEG	LEG	LEG	LEG	
630-645	0	0	0	0	0
645-700	0	0	0	0	0
700-715	0	0	0	0	0
715-730	0	0	0	0	0
730-745	0	0	0	0	0
745-800	0	0	0	0	0
800-815	0	0	0	0	0
815-830	0	0	0	0	0
HOUR TOTALS	NORTH	EAST	SOUTH	WEST	TOTAL
PERIOD	LEG	LEG	LEG	LEG	
630-730	0	0	0	0	0
645-745	0	0	0	0	0
700-800	0	0	0	0	0
715-815	0	0	0	0	0
730-830	0	0	0	0	0

BICYCLE COUNTS

15 MIN COUNTS	NORTH	EAST	SOUTH	WEST	TOTAL
PERIOD	LEG	LEG	LEG	LEG	
630-645	0	0	0	0	0
645-700	0	0	0	0	0
700-715	0	0	0	0	0
715-730	0	0	0	0	0
730-745	0	0	0	0	0
745-800	0	0	0	0	0
800-815	0	0	0	0	0
815-830	0	0	0	0	0
HOUR TOTALS	NORTH	EAST	SOUTH	WEST	TOTAL
PERIOD	LEG	LEG	LEG	LEG	
630-730	0	0	0	0	0
645-745	0	0	0	0	0
700-800	0	0	0	0	0
715-815	0	0	0	0	0
730-830	0	0	0	0	0

APPROACH SUMMARIES

	NORTH APRCH			EAST APRCH			SOUTH APRCH			WEST APRCH	
	APRCH	EXIT		APRCH	EXIT		APRCH	EXIT		APRCH	EXIT
630-730	16	9		98	125		0	0		113	93
645-745	14	10		103	112		0	0		102	97
700-800	3	9		116	96		0	0		95	109
715-815	1	6		116	71		0	0		72	112
730-830	1	8		105	67		0	1		69	99

WILTEC

Phone: (626) 564-1944 Fax: (626) 564-0969 info@wiltecusa.com

INTERSECTION CAR/PED/BIKE TRAFFIC COUNT RESULTS SUMMARY

CLIENT:		AFSHA CONSULTING
PROJECT:		LANCASTER/LEBEC TRAFFIC COUNTS
DATE:		WEDNESDAY DECEMBER 11, 2013
PERIOD:		6:30 AM TO 8:30 AM
INTERSECTION:	N/S	OLD RIDGE ROUTE
	E/W	SR-138/LANCASTER ROAD
CITY:		LOS ANGELES COUNTY

VEHICLE COUNTS

15 MIN COUNTS	1	2	3	4	5	6	7	8	9	10	11	12	
PERIOD	SBRT	SBTH	SBLT	WBRT	WBTH	WBLT	NBRT	NBTH	NBLT	EBRT	EBTH	EBLT	TOTAL
630-645	0	0	0	0	26	0	0	0	1	0	40	0	67
645-700	0	0	0	0	22	0	0	0	1	2	25	0	50
700-715	0	0	0	0	21	0	0	0	0	1	29	0	51
715-730	0	0	0	0	26	0	0	0	0	0	18	0	44
730-745	0	0	0	0	26	0	0	0	1	1	21	0	49
745-800	0	0	0	0	34	1	0	0	1	0	19	0	55
800-815	0	0	0	0	20	0	0	0	0	0	12	0	32
815-830	0	0	0	0	28	1	0	0	0	0	16	0	45
HOUR TOTALS	1	2	3	4	5	6	7	8	9	10	11	12	
PERIOD	SBRT	SBTH	SBLT	WBRT	WBTH	WBLT	NBRT	NBTH	NBLT	EBRT	EBTH	EBLT	TOTAL
630-730	0	0	0	0	95	0	0	0	2	3	112	0	212
645-745	0	0	0	0	95	0	0	0	2	4	93	0	194
700-800	0	0	0	0	107	1	0	0	2	2	87	0	199
715-815	0	0	0	0	106	1	0	0	2	1	70	0	180
730-830	0	0	0	0	108	2	0	0	2	1	68	0	181

PEAK HOUR
630-730
PEAK HOUR FACTOR
0.79

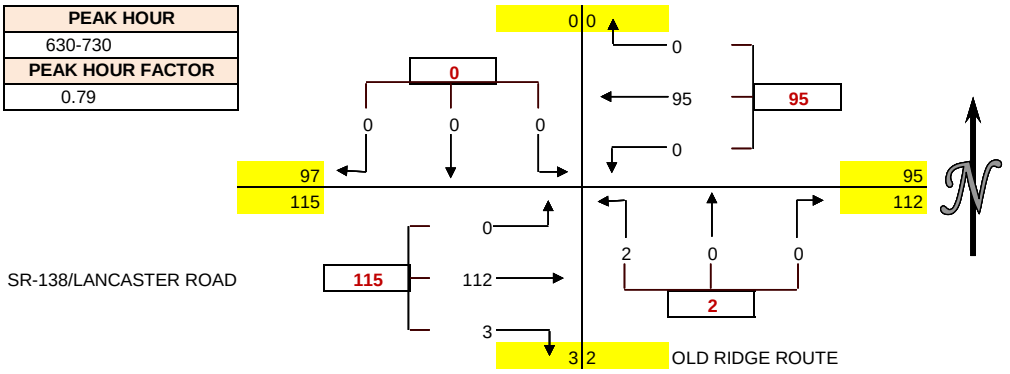

PEDESTRIAN COUNTS

15 MIN COUNTS	NORTH	EAST	SOUTH	WEST	TOTAL
PERIOD	LEG	LEG	LEG	LEG	
630-645	0	0	0	0	0
645-700	0	0	0	0	0
700-715	0	0	0	0	0
715-730	0	0	0	0	0
730-745	0	0	0	0	0
745-800	0	0	0	0	0
800-815	0	0	0	0	0
815-830	0	0	0	0	0
HOUR TOTALS	NORTH	EAST	SOUTH	WEST	TOTAL
PERIOD	LEG	LEG	LEG	LEG	
630-730	0	0	0	0	0
645-745	0	0	0	0	0
700-800	0	0	0	0	0
715-815	0	0	0	0	0
730-830	0	0	0	0	0

BICYCLE COUNTS

15 MIN COUNTS	NORTH	EAST	SOUTH	WEST	TOTAL
PERIOD	LEG	LEG	LEG	LEG	
630-645	0	0	0	0	0
645-700	0	0	0	0	0
700-715	0	0	0	0	0
715-730	0	0	0	0	0
730-745	0	0	0	0	0
745-800	0	0	0	0	0
800-815	0	0	0	0	0
815-830	0	0	0	0	0
HOUR TOTALS	NORTH	EAST	SOUTH	WEST	TOTAL
PERIOD	LEG	LEG	LEG	LEG	
630-730	0	0	0	0	0
645-745	0	0	0	0	0
700-800	0	0	0	0	0
715-815	0	0	0	0	0
730-830	0	0	0	0	0

APPROACH SUMMARIES

	NORTH APRCH		EAST APRCH		SOUTH APRCH		WEST APRCH	
	APRCH	EXIT	APRCH	EXIT	APRCH	EXIT	APRCH	EXIT
630-730	0	0	95	112	2	3	115	97
645-745	0	0	95	93	2	4	97	97
700-800	0	0	108	87	2	3	89	109
715-815	0	0	107	70	2	2	71	108
730-830	0	0	110	68	2	3	69	110

WILTEC

Phone: (626) 564-1944 Fax: (626) 564-0969 info@wiltecusa.com

INTERSECTION CAR/PED/BIKE TRAFFIC COUNT RESULTS SUMMARY

CLIENT:		AFSHA CONSULTING
PROJECT:		LANCASTER/LEBEC TRAFFIC COUNTS
DATE:		WEDNESDAY DECEMBER 11, 2013
PERIOD:		6:30 AM TO 8:30 AM
INTERSECTION:	N/S	UNNAMED ROAD 3000' EAST OF OLD RIDGE ROUTE
	E/W	SR-138/LANCASTER ROAD
CITY:		LOS ANGELES COUNTY

VEHICLE COUNTS

15 MIN COUNTS	1	2	3	4	5	6	7	8	9	10	11	12	
PERIOD	SBRT	SBTH	SBLT	WBRT	WBTH	WBLT	NBRT	NBTH	NBLT	EBRT	EBTH	EBLT	TOTAL
630-645	0	0	0	9	23	0	0	0	0	0	21	22	75
645-700	3	0	0	2	17	0	0	0	0	0	12	10	44
700-715	5	0	0	0	19	0	0	0	0	0	18	12	54
715-730	8	0	0	0	18	0	0	0	0	0	10	8	44
730-745	5	0	2	1	23	0	0	0	0	0	15	6	52
745-800	4	0	1	0	26	0	0	0	0	0	12	8	51
800-815	3	0	0	0	18	0	0	0	0	0	11	1	33
815-830	8	0	0	1	23	0	0	0	0	0	12	6	50
HOUR TOTALS	1	2	3	4	5	6	7	8	9	10	11	12	
PERIOD	SBRT	SBTH	SBLT	WBRT	WBTH	WBLT	NBRT	NBTH	NBLT	EBRT	EBTH	EBLT	TOTAL
630-730	16	0	0	11	77	0	0	0	0	0	61	52	217
645-745	21	0	2	3	77	0	0	0	0	0	55	36	194
700-800	22	0	3	1	86	0	0	0	0	0	55	34	201
715-815	20	0	3	1	85	0	0	0	0	0	48	23	180
730-830	20	0	3	2	90	0	0	0	0	0	50	21	186

PEAK HOUR
630-730
PEAK HOUR FACTOR
0.72

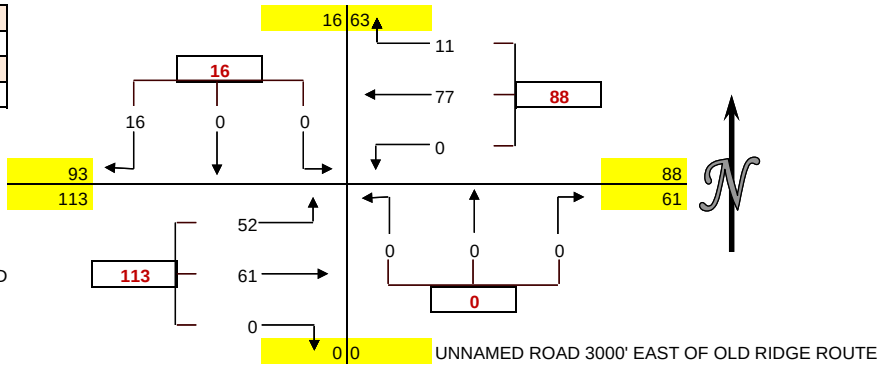

PEDESTRIAN COUNTS

15 MIN COUNTS	NORTH	EAST	SOUTH	WEST	TOTAL
PERIOD	LEG	LEG	LEG	LEG	
630-645	0	0	0	0	0
645-700	0	0	0	0	0
700-715	0	0	0	0	0
715-730	0	0	0	0	0
730-745	0	0	0	0	0
745-800	0	0	0	0	0
800-815	0	0	0	0	0
815-830	0	0	0	0	0
HOUR TOTALS	NORTH	EAST	SOUTH	WEST	TOTAL
PERIOD	LEG	LEG	LEG	LEG	
630-730	0	0	0	0	0
645-745	0	0	0	0	0
700-800	0	0	0	0	0
715-815	0	0	0	0	0
730-830	0	0	0	0	0

BICYCLE COUNTS

15 MIN COUNTS	NORTH	EAST	SOUTH	WEST	TOTAL
PERIOD	LEG	LEG	LEG	LEG	
630-645	0	0	0	0	0
645-700	0	0	0	0	0
700-715	0	0	0	0	0
715-730	0	0	0	0	0
730-745	0	0	0	0	0
745-800	0	0	0	0	0
800-815	0	0	0	0	0
815-830	0	0	0	0	0
HOUR TOTALS	NORTH	EAST	SOUTH	WEST	TOTAL
PERIOD	LEG	LEG	LEG	LEG	
630-730	0	0	0	0	0
645-745	0	0	0	0	0
700-800	0	0	0	0	0
715-815	0	0	0	0	0
730-830	0	0	0	0	0

APPROACH SUMMARIES

	NORTH APRCH			EAST APRCH			SOUTH APRCH			WEST APRCH	
	APRCH	EXIT		APRCH	EXIT		APRCH	EXIT		APRCH	EXIT
630-730	16	63		88	61		0	0		113	93
645-745	23	39		80	57		0	0		91	98
700-800	25	35		87	58		0	0		89	108
715-815	23	24		86	51		0	0		71	105
730-830	23	23		92	53		0	0		71	110

WILTEC

Phone: (626) 564-1944 Fax: (626) 564-0969 info@wiltecusa.com

INTERSECTION CAR/PED/BIKE TRAFFIC COUNT RESULTS SUMMARY

CLIENT:		KIMLEY-HORN
PROJECT:		SR-138 PA&ED
DATE:		12/4/2013
PERIOD:		6:30 AM TO 8:30 AM
INTERSECTION:	N/S	300TH STREET
	E/W	WEST AVENUE D
CITY:		LANCASTER

VEHICLE COUNTS

15 MIN COUNTS	1	2	3	4	5	6	7	8	9	10	11	12	
PERIOD	SBRT	SBTH	SBLT	WBRT	WBTH	WBLT	NBRT	NBTH	NBLT	EBRT	EBTH	EBLT	TOTAL
630-645	0	0	0	0	24	0	0	0	0	0	10	0	34
645-700	0	0	1	0	20	0	0	0	0	0	11	0	32
700-715	1	0	0	0	25	0	0	0	0	0	12	0	38
715-730	0	0	0	1	28	0	0	0	0	0	11	0	40
730-745	0	0	1	0	26	0	0	0	0	0	7	0	34
745-800	0	0	0	0	22	0	0	0	0	0	13	0	35
800-815	0	0	0	0	19	0	0	0	0	0	8	0	27
815-830	0	0	0	0	30	0	0	0	0	0	8	0	38
HOUR TOTALS													
PERIOD	SBRT	SBTH	SBLT	WBRT	WBTH	WBLT	NBRT	NBTH	NBLT	EBRT	EBTH	EBLT	TOTAL
630-730	1	0	1	1	97	0	0	0	0	0	44	0	144
645-745	1	0	2	1	99	0	0	0	0	0	41	0	144
700-800	1	0	1	1	101	0	0	0	0	0	43	0	147
715-815	0	0	1	1	95	0	0	0	0	0	39	0	136
730-830	0	0	1	0	97	0	0	0	0	0	36	0	134

PEAK HOUR
700-800
PEAK HOUR FACTOR
0.92

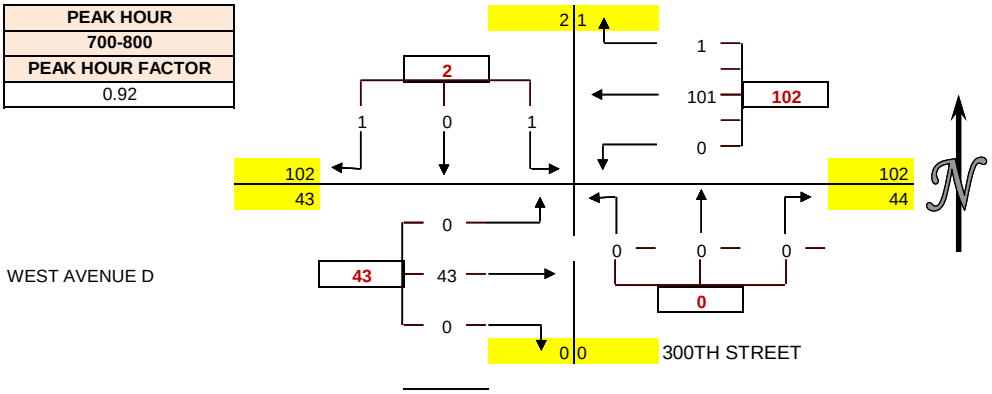

APPROACH SUMMARIES

	NORTH LEG			EAST LEG			SOUTH LEG			WEST LEG	
	APRCH	DEPR		APRCH	DEPR		APRCH	DEPR		APRCH	DEPR
630-730	2	1		98	45		0	0		44	98
645-745	3	1		100	43		0	0		41	100
700-800	2	1		102	44		0	0		43	102
715-815	1	1		96	40		0	0		39	95
730-830	1	0		97	37		0	0		36	97

WILTEC

Phone: (626) 564-1944 Fax: (626) 564-0969 info@wiltecusa.com

INTERSECTION CAR/PED/BIKE TRAFFIC COUNT RESULTS SUMMARY

CLIENT:		KIMLEY-HORN
PROJECT:		SR-138 PA&ED
DATE:		12/5/2013
PERIOD:		6:30 AM TO 8:30 AM
INTERSECTION:	N/S	MARGALO DR.
	E/W	WEST AVENUE D
CITY:		LANCASTER

VEHICLE COUNTS

15 MIN COUNTS	1	2	3	4	5	6	7	8	9	10	11	12	
PERIOD	SBRT	SBTH	SBLT	WBRT	WBTH	WBLT	NBRT	NBTH	NBLT	EBRT	EBTH	EBLT	TOTAL
630-645	0	0	0	0	28	0	0	0	0	0	12	0	40
645-700	0	0	0	0	19	0	0	0	0	0	14	0	33
700-715	0	0	1	1	26	0	0	0	0	0	13	0	41
715-730	2	0	0	0	30	0	0	0	0	0	10	0	42
730-745	0	0	0	0	27	0	0	0	0	0	9	1	37
745-800	0	0	0	0	25	0	0	0	0	0	14	0	39
800-815	0	0	0	0	18	0	0	0	0	0	8	0	26
815-830	0	0	0	0	25	0	0	0	0	0	11	0	36
HOUR TOTALS													
PERIOD	SBRT	SBTH	SBLT	WBRT	WBTH	WBLT	NBRT	NBTH	NBLT	EBRT	EBTH	EBLT	TOTAL
630-730	2	0	1	1	103	0	0	0	0	0	49	0	156
645-745	2	0	1	1	102	0	0	0	0	0	46	1	153
700-800	2	0	1	1	108	0	0	0	0	0	46	1	159
715-815	2	0	0	0	100	0	0	0	0	0	41	1	144
730-830	0	0	0	0	95	0	0	0	0	0	42	1	138

PEAK HOUR
700-800
PEAK HOUR FACTOR
0.95

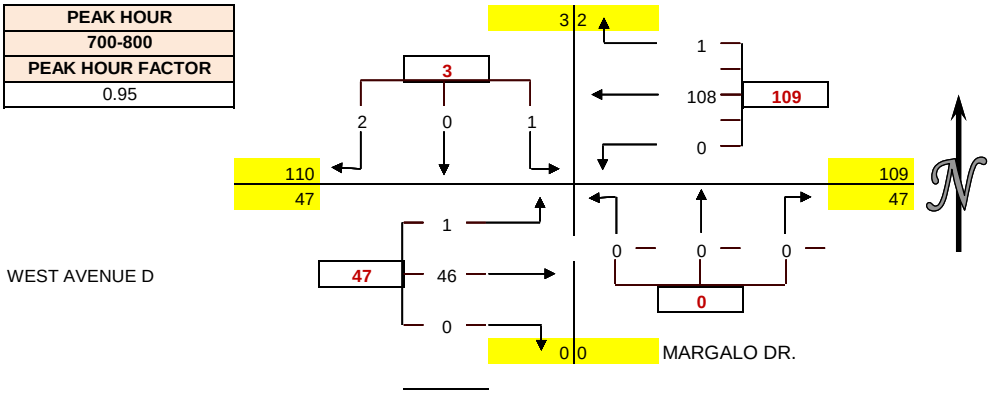

APPROACH SUMMARIES

	NORTH LEG			EAST LEG			SOUTH LEG			WEST LEG	
	APRCH	DEPR		APRCH	DEPR		APRCH	DEPR		APRCH	DEPR
630-730	3	1		104	50		0	0		49	105
645-745	3	2		103	47		0	0		47	104
700-800	3	2		109	47		0	0		47	110
715-815	2	1		100	41		0	0		42	102
730-830	0	1		95	42		0	0		43	95

WILTEC

Phone: (626) 564-1944 Fax: (626) 564-0969 info@wiltecusa.com

INTERSECTION CAR/PED/BIKE TRAFFIC COUNT RESULTS SUMMARY

CLIENT:		KIMLEY-HORN
PROJECT:		SR-138 PA&ED
DATE:		12/5/2013
PERIOD:		6:30 AM TO 8:30 AM
INTERSECTION:	N/S	280TH STREET
	E/W	WEST AVENUE D
CITY:		LANCASTER

VEHICLE COUNTS

15 MIN COUNTS	1	2	3	4	5	6	7	8	9	10	11	12	
PERIOD	SBRT	SBTH	SBLT	WBRT	WBTH	WBLT	NBRT	NBTH	NBLT	EBRT	EBTH	EBLT	TOTAL
630-645	0	0	0	0	28	0	0	0	0	0	12	0	40
645-700	0	0	0	0	27	0	0	0	0	0	14	0	41
700-715	0	0	0	0	28	0	0	0	0	0	12	0	40
715-730	0	0	0	0	31	0	0	0	0	0	11	0	42
730-745	0	0	0	0	28	0	0	0	0	0	8	0	36
745-800	0	0	0	0	24	0	0	0	0	0	15	0	39
800-815	0	0	0	0	20	0	0	0	0	0	9	0	29
815-830	0	0	0	0	29	0	0	0	0	0	10	0	39
HOUR TOTALS													
PERIOD	SBRT	SBTH	SBLT	WBRT	WBTH	WBLT	NBRT	NBTH	NBLT	EBRT	EBTH	EBLT	TOTAL
630-730	0	0	0	0	114	0	0	0	0	0	49	0	163
645-745	0	0	0	0	114	0	0	0	0	0	45	0	159
700-800	0	0	0	0	111	0	0	0	0	0	46	0	157
715-815	0	0	0	0	103	0	0	0	0	0	43	0	146
730-830	0	0	0	0	101	0	0	0	0	0	42	0	143

PEAK HOUR
630-730
PEAK HOUR FACTOR
0.97

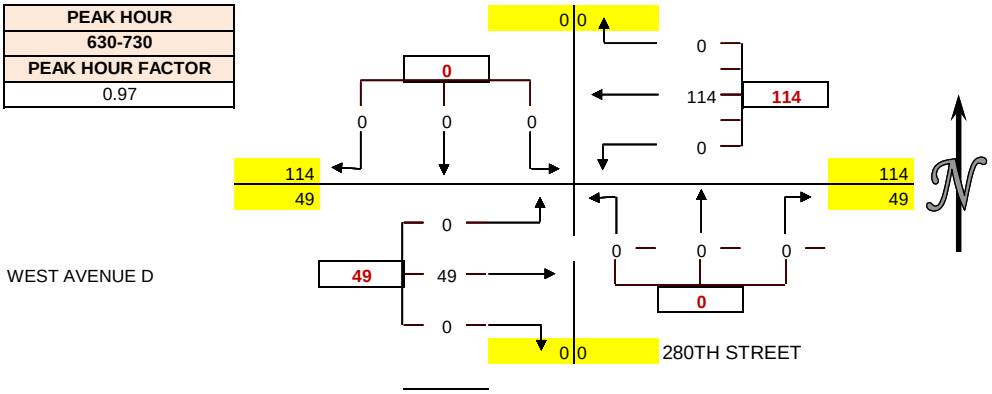

APPROACH SUMMARIES

	NORTH LEG			EAST LEG			SOUTH LEG			WEST LEG	
	APRCH	DEPR		APRCH	DEPR		APRCH	DEPR		APRCH	DEPR
630-730	0	0		114	49		0	0		49	114
645-745	0	0		114	45		0	0		45	114
700-800	0	0		111	46		0	0		46	111
715-815	0	0		103	43		0	0		43	103
730-830	0	0		101	42		0	0		42	101

WILTEC

Phone: (626) 564-1944 Fax: (626) 564-0969 info@wiltecusa.com

INTERSECTION CAR/PED/BIKE TRAFFIC COUNT RESULTS SUMMARY

CLIENT:		KIMLEY-HORN
PROJECT:		SR-138 PA&ED
DATE:		12/6/2013
PERIOD:		6:30 AM TO 8:30 AM
INTERSECTION:	N/S	3 POINTS RD.
	E/W	WEST AVENUE D
CITY:		LANCASTER

VEHICLE COUNTS

15 MIN COUNTS	1	2	3	4	5	6	7	8	9	10	11	12	
PERIOD	SBRT	SBTH	SBLT	WBRT	WBTH	WBLT	NBRT	NBTH	NBLT	EBRT	EBTH	EBLT	TOTAL
630-645	1	0	2	0	22	1	2	0	1	1	13	0	43
645-700	0	0	0	0	14	0	2	0	2	0	8	0	26
700-715	2	0	1	1	12	0	0	0	0	0	8	0	24
715-730	1	0	0	0	30	0	1	0	2	0	18	0	52
730-745	1	0	1	0	18	1	1	0	1	0	16	0	39
745-800	0	0	2	0	12	2	0	0	0	0	16	1	33
800-815	0	0	1	2	23	1	1	0	1	0	11	0	40
815-830	2	0	3	0	23	0	1	0	1	0	12	0	42
HOUR TOTALS													
PERIOD	SBRT	SBTH	SBLT	WBRT	WBTH	WBLT	NBRT	NBTH	NBLT	EBRT	EBTH	EBLT	TOTAL
630-730	4	0	3	1	78	1	5	0	5	1	47	0	145
645-745	4	0	2	1	74	1	4	0	5	0	50	0	141
700-800	4	0	4	1	72	3	2	0	3	0	58	1	148
715-815	2	0	4	2	83	4	3	0	4	0	61	1	164
730-830	3	0	7	2	76	4	3	0	3	0	55	1	154

PEAK HOUR
715-815
PEAK HOUR FACTOR
0.79

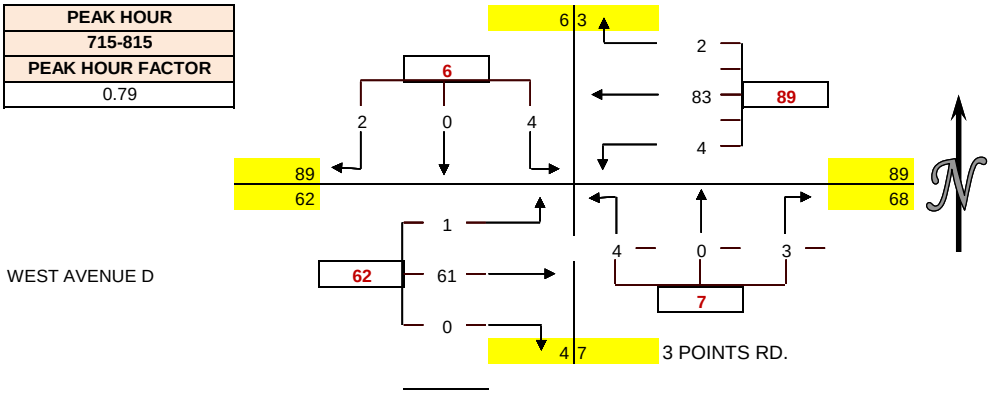

APPROACH SUMMARIES

	NORTH LEG			EAST LEG			SOUTH LEG			WEST LEG	
	APRCH	DEPR		APRCH	DEPR		APRCH	DEPR		APRCH	DEPR
630-730	7	1		80	55		10	2		48	87
645-745	6	1		76	56		9	1		50	83
700-800	8	2		76	64		5	3		59	79
715-815	6	3		89	68		7	4		62	89
730-830	10	3		82	65		6	4		56	82

WILTEC

Phone: (626) 564-1944 Fax: (626) 564-0969 info@wiltecusa.com

INTERSECTION CAR/PED/BIKE TRAFFIC COUNT RESULTS SUMMARY

CLIENT:		KIMLEY-HORN
PROJECT:		SR-138 PA&ED
DATE:		12/6/2013
PERIOD:		6:30 AM TO 8:30 AM
INTERSECTION:	N/S	LA PETITE AVE.
	E/W	WEST AVENUE D
CITY:		LANCASTER

VEHICLE COUNTS

15 MIN COUNTS	1	2	3	4	5	6	7	8	9	10	11	12	
PERIOD	SBRT	SBTH	SBLT	WBRT	WBTH	WBLT	NBRT	NBTH	NBLT	EBRT	EBTH	EBLT	TOTAL
630-645	2	0	4	3	26	0	0	0	0	0	15	4	54
645-700	8	0	8	1	15	0	0	0	0	0	9	3	44
700-715	6	0	3	1	12	0	0	0	0	0	10	5	37
715-730	5	0	6	3	28	0	0	0	0	0	16	4	62
730-745	3	0	3	4	17	0	0	0	0	0	18	2	47
745-800	4	0	5	0	15	0	0	0	0	0	14	0	38
800-815	3	0	3	1	28	0	0	0	0	0	13	0	48
815-830	5	0	0	4	21	0	0	0	0	0	15	1	46
HOUR TOTALS													
PERIOD	SBRT	SBTH	SBLT	WBRT	WBTH	WBLT	NBRT	NBTH	NBLT	EBRT	EBTH	EBLT	TOTAL
630-730	21	0	21	8	81	0	0	0	0	0	50	16	197
645-745	22	0	20	9	72	0	0	0	0	0	53	14	190
700-800	18	0	17	8	72	0	0	0	0	0	58	11	184
715-815	15	0	17	8	88	0	0	0	0	0	61	6	195
730-830	15	0	11	9	81	0	0	0	0	0	60	3	179

PEAK HOUR
630-730
PEAK HOUR FACTOR
0.79

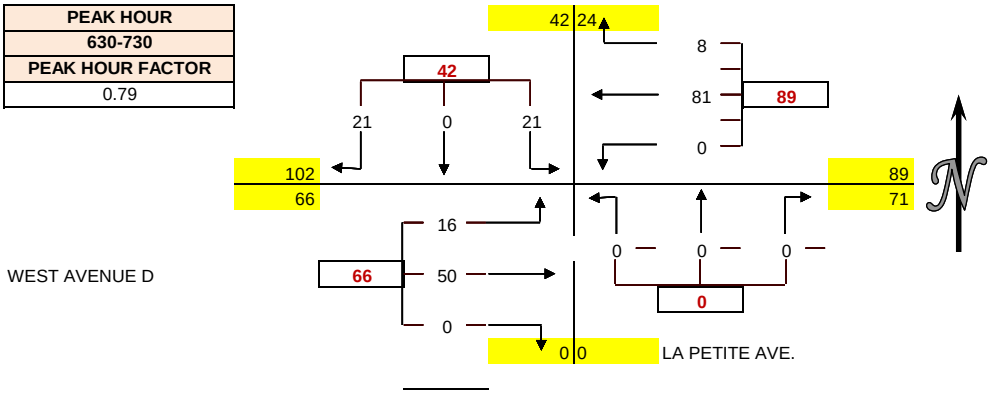

APPROACH SUMMARIES

	NORTH LEG			EAST LEG			SOUTH LEG			WEST LEG	
	APRCH	DEPR		APRCH	DEPR		APRCH	DEPR		APRCH	DEPR
630-730	42	24		89	71		0	0		66	102
645-745	42	23		81	73		0	0		67	94
700-800	35	19		80	75		0	0		69	90
715-815	32	14		96	78		0	0		67	103
730-830	26	12		90	71		0	0		63	96

WILTEC

Phone: (626) 564-1944 Fax: (626) 564-0969 info@wiltecusa.com

INTERSECTION CAR/PED/BIKE TRAFFIC COUNT RESULTS SUMMARY

CLIENT:		KIMLEY-HORN
PROJECT:		SR-138 PA&ED
DATE:		12/10/2013
PERIOD:		6:30 AM TO 8:30 AM
INTERSECTION:	N/S	230TH STREET
	E/W	WEST AVENUE D
CITY:		LANCASTER

VEHICLE COUNTS

15 MIN COUNTS	1	2	3	4	5	6	7	8	9	10	11	12	
PERIOD	SBRT	SBTH	SBLT	WBRT	WBTH	WBLT	NBRT	NBTH	NBLT	EBRT	EBTH	EBLT	TOTAL
630-645	0	0	1	0	22	0	0	0	0	0	15	0	38
645-700	0	0	1	0	19	0	0	0	0	0	14	0	34
700-715	1	0	0	0	21	0	0	0	0	0	12	1	35
715-730	0	0	0	0	21	0	0	0	0	0	12	0	33
730-745	0	0	0	1	18	0	0	0	0	0	12	0	31
745-800	0	0	1	0	16	0	0	0	0	0	14	2	33
800-815	0	0	3	0	18	0	0	0	0	0	10	1	32
815-830	0	0	0	0	12	0	0	0	0	0	9	0	21
HOUR TOTALS													
PERIOD	SBRT	SBTH	SBLT	WBRT	WBTH	WBLT	NBRT	NBTH	NBLT	EBRT	EBTH	EBLT	TOTAL
630-730	1	0	2	0	83	0	0	0	0	0	53	1	140
645-745	1	0	1	1	79	0	0	0	0	0	50	1	133
700-800	1	0	1	1	76	0	0	0	0	0	50	3	132
715-815	0	0	4	1	73	0	0	0	0	0	48	3	129
730-830	0	0	4	1	64	0	0	0	0	0	45	3	117

PEAK HOUR
630-730
PEAK HOUR FACTOR
0.92

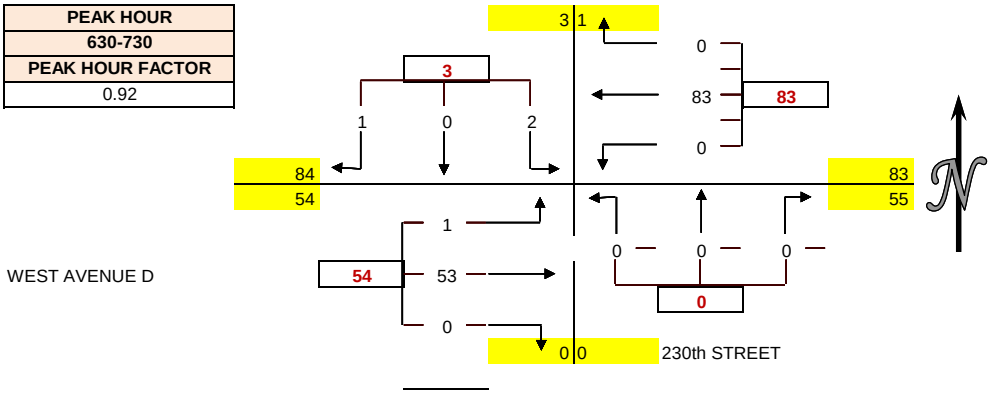

APPROACH SUMMARIES

	NORTH LEG			EAST LEG			SOUTH LEG			WEST LEG	
	APRCH	DEPR		APRCH	DEPR		APRCH	DEPR		APRCH	DEPR
630-730	3	1		83	55		0	0		54	84
645-745	2	2		80	51		0	0		51	80
700-800	2	4		77	51		0	0		53	77
715-815	4	4		74	52		0	0		51	73
730-830	4	4		65	49		0	0		48	64

WILTEC

Phone: (626) 564-1944 Fax: (626) 564-0969 info@wiltecusa.com

INTERSECTION CAR/PED/BIKE TRAFFIC COUNT RESULTS SUMMARY

CLIENT:		KIMLEY-HORN
PROJECT:		SR-138 PA&ED
DATE:		12/10/2013
PERIOD:		6:30 AM TO 8:30 AM
INTERSECTION:	N/S	210TH STREET
	E/W	WEST AVENUE D
CITY:		LANCASTER

VEHICLE COUNTS

15 MIN COUNTS	1	2	3	4	5	6	7	8	9	10	11	12	
PERIOD	SBRT	SBTH	SBLT	WBRT	WBTH	WBLT	NBRT	NBTH	NBLT	EBRT	EBTH	EBLT	TOTAL
630-645	0	0	0	0	27	0	1	0	0	0	14	0	42
645-700	0	0	0	0	13	0	0	0	1	0	13	0	27
700-715	0	0	0	0	11	0	0	0	0	0	11	0	22
715-730	0	0	0	0	20	0	1	0	0	0	12	0	33
730-745	1	0	0	0	17	1	0	0	1	0	10	0	30
745-800	0	0	0	0	17	0	1	0	0	0	9	0	27
800-815	1	0	0	0	21	1	0	0	1	0	11	0	35
815-830	0	0	0	0	11	0	0	0	0	0	10	0	21
HOUR TOTALS	1	2	3	4	5	6	7	8	9	10	11	12	
PERIOD	SBRT	SBTH	SBLT	WBRT	WBTH	WBLT	NBRT	NBTH	NBLT	EBRT	EBTH	EBLT	TOTAL
630-730	0	0	0	0	71	0	2	0	1	0	50	0	124
645-745	1	0	0	0	61	1	1	0	2	0	46	0	112
700-800	1	0	0	0	65	1	2	0	1	0	42	0	112
715-815	2	0	0	0	75	2	2	0	2	0	42	0	125
730-830	2	0	0	0	66	2	1	0	2	0	40	0	113

PEAK HOUR
630-730
PEAK HOUR FACTOR
0.74

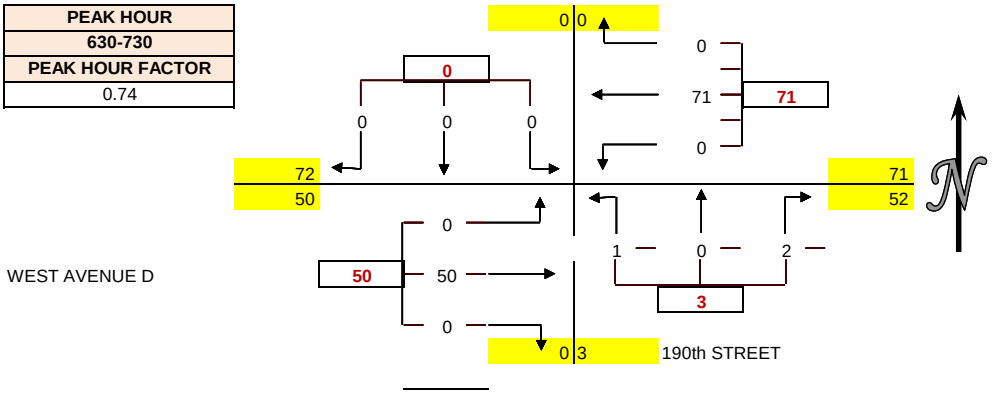

APPROACH SUMMARIES

	NORTH LEG			EAST LEG			SOUTH LEG			WEST LEG	
	APRCH	DEPR		APRCH	DEPR		APRCH	DEPR		APRCH	DEPR
630-730	0	0		71	52		3	0		50	72
645-745	1	0		62	47		3	1		46	64
700-800	1	0		66	44		3	1		42	67
715-815	2	0		77	44		4	2		42	79
730-830	2	0		68	41		3	2		40	70

WILTEC

Phone: (626) 564-1944 Fax: (626) 564-0969 info@wiltecusa.com

INTERSECTION CAR/PED/BIKE TRAFFIC COUNT RESULTS SUMMARY

CLIENT:		KIMLEY-HORN
PROJECT:		SR-138 PA&ED
DATE:		12/12/2013
PERIOD:		6:30 AM TO 8:30 AM
INTERSECTION:	N/S	190TH STREET
	E/W	WEST AVENUE D
CITY:		LANCASTER

VEHICLE COUNTS

15 MIN COUNTS	1	2	3	4	5	6	7	8	9	10	11	12	
PERIOD	SBRT	SBTH	SBLT	WBRT	WBTH	WBLT	NBRT	NBTH	NBLT	EBRT	EBTH	EBLT	TOTAL
630-645	0	0	2	1	24	0	0	0	0	0	14	0	41
645-700	0	0	0	0	17	0	0	0	0	0	13	0	30
700-715	0	0	0	1	10	0	0	0	1	0	11	0	23
715-730	0	0	2	1	20	0	1	0	0	0	12	0	36
730-745	1	0	0	1	16	1	0	0	0	0	10	0	29
745-800	0	0	0	2	18	0	1	0	0	0	9	0	30
800-815	1	0	0	0	19	1	0	0	0	0	11	0	32
815-830	0	0	0	0	14	0	0	0	0	0	10	0	24
HOUR TOTALS	1	2	3	4	5	6	7	8	9	10	11	12	
PERIOD	SBRT	SBTH	SBLT	WBRT	WBTH	WBLT	NBRT	NBTH	NBLT	EBRT	EBTH	EBLT	TOTAL
630-730	0	0	4	3	71	0	1	0	1	0	50	0	130
645-745	1	0	2	3	63	1	1	0	1	0	46	0	118
700-800	1	0	2	5	64	1	2	0	1	0	42	0	118
715-815	2	0	2	4	73	2	2	0	0	0	42	0	127
730-830	2	0	0	3	67	2	1	0	0	0	40	0	115

PEAK HOUR
630-730
PEAK HOUR FACTOR
0.79

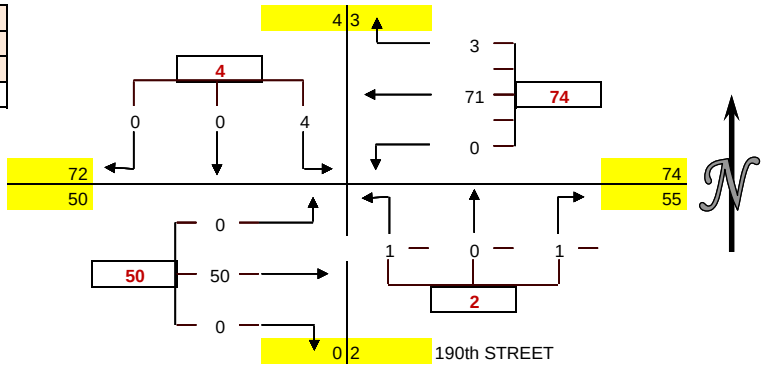

APPROACH SUMMARIES

	NORTH LEG			EAST LEG			SOUTH LEG			WEST LEG	
	APRCH	DEPR		APRCH	DEPR		APRCH	DEPR		APRCH	DEPR
630-730	4	3		74	55		2	0		50	72
645-745	3	3		67	49		2	1		46	65
700-800	3	5		70	46		3	1		42	66
715-815	4	4		79	46		2	2		42	75
730-830	2	3		72	41		1	2		40	69

WILTEC

Phone: (626) 564-1944 Fax: (626) 564-0969 info@wiltecusa.com

INTERSECTION CAR/PED/BIKE TRAFFIC COUNT RESULTS SUMMARY

CLIENT:		KIMLEY-HORN
PROJECT:		SR-138 PA&ED
DATE:		12/12/2013
PERIOD:		6:30 AM TO 8:30 AM
INTERSECTION:	N/S	170TH STREET
	E/W	WEST AVENUE D
CITY:		LANCASTER

VEHICLE COUNTS

15 MIN COUNTS	1	2	3	4	5	6	7	8	9	10	11	12	
PERIOD	SBRT	SBTH	SBLT	WBRT	WBTH	WBLT	NBRT	NBTH	NBLT	EBRT	EBTH	EBLT	TOTAL
630-645	2	1	1	10	27	0	0	1	0	0	12	5	59
645-700	0	3	0	4	13	0	0	4	0	0	14	3	41
700-715	1	3	0	4	10	0	1	2	0	0	11	1	33
715-730	1	0	0	3	20	0	0	2	0	0	9	2	37
730-745	0	1	0	5	17	1	0	7	0	0	10	4	45
745-800	1	1	1	6	17	0	0	2	0	0	12	0	40
800-815	2	0	0	2	21	0	0	0	0	1	11	1	38
815-830	0	1	0	1	11	0	2	0	0	1	13	0	29
HOUR TOTALS	1	2	3	4	5	6	7	8	9	10	11	12	
PERIOD	SBRT	SBTH	SBLT	WBRT	WBTH	WBLT	NBRT	NBTH	NBLT	EBRT	EBTH	EBLT	TOTAL
630-730	4	7	1	21	70	0	1	9	0	0	46	11	170
645-745	2	7	0	16	60	1	1	15	0	0	44	10	156
700-800	3	5	1	18	64	1	1	13	0	0	42	7	155
715-815	4	2	1	16	75	1	0	11	0	1	42	7	160
730-830	3	3	1	14	66	1	2	9	0	2	46	5	152

PEAK HOUR
630-730
PEAK HOUR FACTOR
0.72

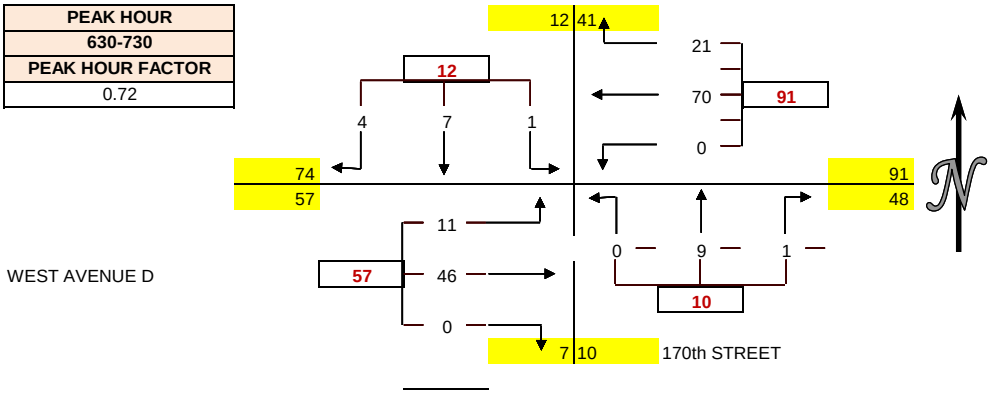

APPROACH SUMMARIES

	NORTH LEG			EAST LEG			SOUTH LEG			WEST LEG	
	APRCH	DEPR		APRCH	DEPR		APRCH	DEPR		APRCH	DEPR
630-730	12	41		91	48		10	7		57	74
645-745	9	41		77	45		16	8		54	62
700-800	9	38		83	44		14	6		49	67
715-815	7	34		92	43		11	4		50	79
730-830	7	28		81	49		11	6		53	69

WILTEC

Phone: (626) 564-1944 Fax: (626) 564-0969 info@wiltecusa.com

INTERSECTION CAR/PED/BIKE TRAFFIC COUNT RESULTS SUMMARY

CLIENT:		KIMLEY-HORN
PROJECT:		SR-138 PA&ED
DATE:		12/12/2013
PERIOD:		6:30 AM TO 8:30 AM
INTERSECTION:	N/S	110 STREET
	E/W	WEST AVENUE D
CITY:		LANCASTER

VEHICLE COUNTS

15 MIN COUNTS	1	2	3	4	5	6	7	8	9	10	11	12	
PERIOD	SBRT	SBTH	SBLT	WBRT	WBTH	WBLT	NBRT	NBTH	NBLT	EBRT	EBTH	EBLT	TOTAL
630-645	0	0	0	0	32	0	0	0	0	0	11	0	43
645-700	0	0	0	0	12	0	0	0	0	0	12	0	24
700-715	0	0	0	0	15	0	0	0	0	0	10	2	27
715-730	0	1	0	0	30	0	1	0	1	0	12	0	45
730-745	0	0	0	1	22	0	0	0	0	0	10	0	33
745-800	0	0	0	0	18	2	0	1	0	0	8	0	29
800-815	0	0	0	0	20	0	0	0	0	0	11	0	31
815-830	0	0	0	0	21	0	0	0	0	0	9	0	30
HOUR TOTALS	1	2	3	4	5	6	7	8	9	10	11	12	
PERIOD	SBRT	SBTH	SBLT	WBRT	WBTH	WBLT	NBRT	NBTH	NBLT	EBRT	EBTH	EBLT	TOTAL
630-730	0	1	0	0	89	0	1	0	1	0	45	2	139
645-745	0	1	0	1	79	0	1	0	1	0	44	2	129
700-800	0	1	0	1	85	2	1	1	1	0	40	2	134
715-815	0	1	0	1	90	2	1	1	1	0	41	0	138
730-830	0	0	0	1	81	2	0	1	0	0	38	0	123

PEAK HOUR
630-730
PEAK HOUR FACTOR
0.77

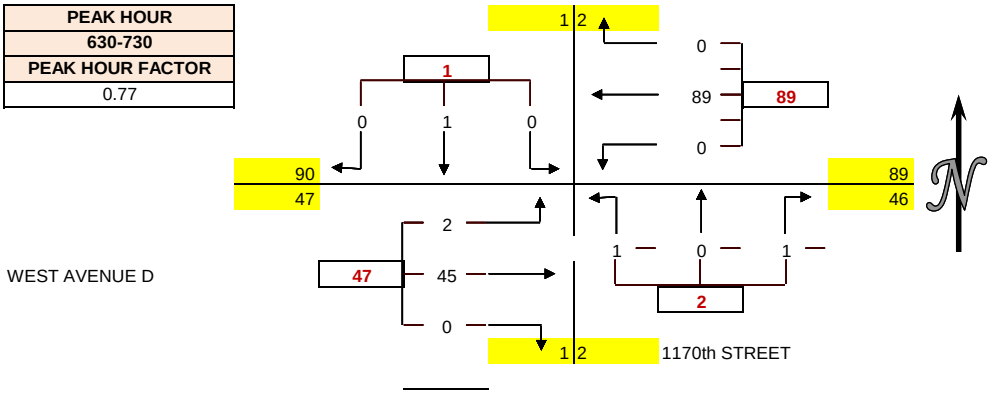

APPROACH SUMMARIES

	NORTH LEG			EAST LEG			SOUTH LEG			WEST LEG	
	APRCH	DEPR		APRCH	DEPR		APRCH	DEPR		APRCH	DEPR
630-730	1	2		89	46		2	1		47	90
645-745	1	3		80	45		2	1		46	80
700-800	1	4		88	41		3	3		42	86
715-815	1	2		93	42		3	3		41	91
730-830	0	2		84	38		1	2		38	81

WILTEC

Phone: (626) 564-1944 Fax: (626) 564-0969 info@wiltecusa.com

INTERSECTION CAR/PED/BIKE TRAFFIC COUNT RESULTS SUMMARY

CLIENT:		AFSHA CONSULTING
PROJECT:		LANCASTER/LEBEC TRAFFIC COUNTS
DATE:		WEDNESDAY DECEMBER 11, 2013
PERIOD:		6:30 AM TO 8:30 AM
INTERSECTION:	N/S	90TH STREET WEST SR-138
	E/W	WEST AVENUE D
CITY:		LANCASTER

VEHICLE COUNTS

15 MIN COUNTS	1	2	3	4	5	6	7	8	9	10	11	12	
PERIOD	SBRT	SBTH	SBLT	WBRT	WBTH	WBLT	NBRT	NBTH	NBLT	EBRT	EBTH	EBLT	TOTAL
630-645	2	4	3	4	22	2	1	7	2	2	9	1	59
645-700	1	3	6	5	21	1	2	1	1	2	11	3	57
700-715	0	9	8	2	25	3	1	2	0	0	11	0	61
715-730	1	9	8	2	20	5	7	6	1	0	13	2	74
730-745	5	7	3	0	21	1	4	3	2	1	5	1	53
745-800	2	4	11	2	16	1	3	3	2	1	13	0	58
800-815	0	6	5	4	17	0	1	3	2	0	15	1	54
815-830	0	3	5	3	20	1	1	6	1	1	15	2	58
HOUR TOTALS	1	2	3	4	5	6	7	8	9	10	11	12	
PERIOD	SBRT	SBTH	SBLT	WBRT	WBTH	WBLT	NBRT	NBTH	NBLT	EBRT	EBTH	EBLT	TOTAL
630-730	4	25	25	13	88	11	11	16	4	4	44	6	251
645-745	7	28	25	9	87	10	14	12	4	3	40	6	245
700-800	8	29	30	6	82	10	15	14	5	2	42	3	246
715-815	8	26	27	8	74	7	15	15	7	2	46	4	239
730-830	7	20	24	9	74	3	9	15	7	3	48	4	223

PEAK HOUR
630-730
PEAK HOUR FACTOR
0.85

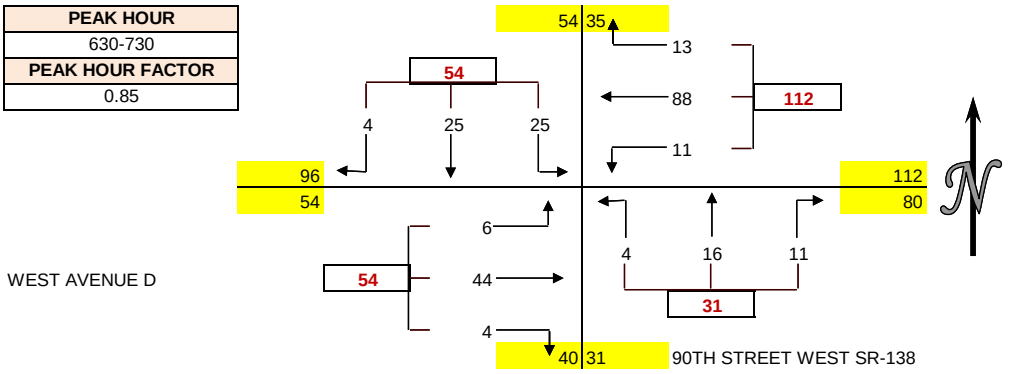

PEDESTRIAN COUNTS

15 MIN COUNTS	NORTH	EAST	SOUTH	WEST	TOTAL
PERIOD	LEG	LEG	LEG	LEG	
630-645	0	0	0	0	0
645-700	0	0	0	0	0
700-715	0	0	0	0	0
715-730	0	0	0	0	0
730-745	0	0	0	0	0
745-800	0	0	0	0	0
800-815	0	0	0	0	0
815-830	0	0	0	0	0
HOUR TOTALS	NORTH	EAST	SOUTH	WEST	TOTAL
PERIOD	LEG	LEG	LEG	LEG	
630-730	0	0	0	0	0
645-745	0	0	0	0	0
700-800	0	0	0	0	0
715-815	0	0	0	0	0
730-830	0	0	0	0	0

BICYCLE COUNTS

15 MIN COUNTS	NORTH	EAST	SOUTH	WEST	TOTAL
PERIOD	LEG	LEG	LEG	LEG	
630-645	0	0	0	0	0
645-700	0	0	0	0	0
700-715	0	0	0	0	0
715-730	0	0	0	0	0
730-745	0	0	0	0	0
745-800	0	0	0	0	0
800-815	0	0	0	0	0
815-830	0	0	0	0	0
HOUR TOTALS	NORTH	EAST	SOUTH	WEST	TOTAL
PERIOD	LEG	LEG	LEG	LEG	
630-730	0	0	0	0	0
645-745	0	0	0	0	0
700-800	0	0	0	0	0
715-815	0	0	0	0	0
730-830	0	0	0	0	0

APPROACH SUMMARIES

	NORTH APRCH			EAST APRCH			SOUTH APRCH			WEST APRCH	
	APRCH	EXIT		APRCH	EXIT		APRCH	EXIT		APRCH	EXIT
630-730	54	35		112	80		31	40		54	96
645-745	60	27		106	79		30	41		49	98
700-800	67	23		98	87		34	41		47	95
715-815	61	27		89	88		37	35		52	89
730-830	51	28		86	81		31	26		55	88

WILTEC

Phone: (626) 564-1944 Fax: (626) 564-0969 info@wiltecusa.com

INTERSECTION CAR/PED/BIKE TRAFFIC COUNT RESULTS SUMMARY

CLIENT:		AFSHA CONSULTING
PROJECT:		LANCASTER/LEBEC TRAFFIC COUNTS
DATE:		WEDNESDAY DECEMBER 11, 2013
PERIOD:		6:30 AM TO 8:30 AM
INTERSECTION:	N/S	85TH STREET WEST SR-138
	E/W	WEST AVENUE D
CITY:		LANCASTER

VEHICLE COUNTS

15 MIN COUNTS	1	2	3	4	5	6	7	8	9	10	11	12	
PERIOD	SBRT	SBTH	SBLT	WBRT	WBTH	WBLT	NBRT	NBTH	NBLT	EBRT	EBTH	EBLT	TOTAL
630-645	0	0	5	0	27	0	0	0	0	0	12	1	45
645-700	0	0	2	0	26	0	1	0	0	0	13	0	42
700-715	0	0	5	0	23	0	1	0	0	0	21	0	50
715-730	2	0	0	0	32	0	2	0	0	0	22	0	58
730-745	0	0	1	0	24	0	1	0	0	0	20	0	46
745-800	0	0	1	0	23	0	0	0	0	0	14	0	38
800-815	0	0	1	0	20	0	1	0	0	0	25	0	47
815-830	0	0	1	0	17	0	0	0	1	0	19	0	38
HOUR TOTALS	1	2	3	4	5	6	7	8	9	10	11	12	
PERIOD	SBRT	SBTH	SBLT	WBRT	WBTH	WBLT	NBRT	NBTH	NBLT	EBRT	EBTH	EBLT	TOTAL
630-730	2	0	12	0	108	0	4	0	0	0	68	1	195
645-745	2	0	8	0	105	0	5	0	0	0	76	0	196
700-800	2	0	7	0	102	0	4	0	0	0	77	0	192
715-815	2	0	3	0	99	0	4	0	0	0	81	0	189
730-830	0	0	4	0	84	0	2	0	1	0	78	0	169

PEAK HOUR
645-745
PEAK HOUR FACTOR
0.84

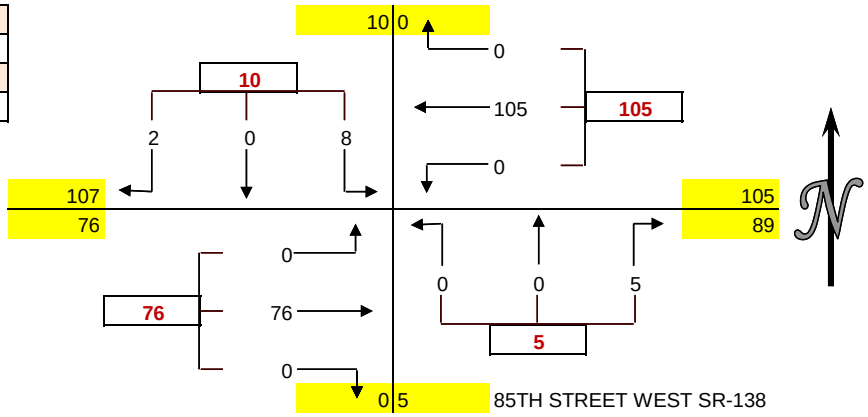

PEDESTRIAN COUNTS

15 MIN COUNTS	NORTH	EAST	SOUTH	WEST	TOTAL
PERIOD	LEG	LEG	LEG	LEG	
630-645	0	0	0	0	0
645-700	0	0	0	0	0
700-715	0	0	0	0	0
715-730	0	0	0	0	0
730-745	0	0	0	0	0
745-800	0	0	0	0	0
800-815	0	0	0	0	0
815-830	0	0	0	0	0
HOUR TOTALS	NORTH	EAST	SOUTH	WEST	TOTAL
PERIOD	LEG	LEG	LEG	LEG	
630-730	0	0	0	0	0
645-745	0	0	0	0	0
700-800	0	0	0	0	0
715-815	0	0	0	0	0
730-830	0	0	0	0	0

BICYCLE COUNTS

15 MIN COUNTS	NORTH	EAST	SOUTH	WEST	TOTAL
PERIOD	LEG	LEG	LEG	LEG	
630-645	0	0	0	0	0
645-700	0	0	0	0	0
700-715	0	0	0	0	0
715-730	0	0	0	0	0
730-745	0	0	0	0	0
745-800	0	0	0	0	0
800-815	0	0	0	0	0
815-830	0	0	0	0	0
HOUR TOTALS	NORTH	EAST	SOUTH	WEST	TOTAL
PERIOD	LEG	LEG	LEG	LEG	
630-730	0	0	0	0	0
645-745	0	0	0	0	0
700-800	0	0	0	0	0
715-815	0	0	0	0	0
730-830	0	0	0	0	0

APPROACH SUMMARIES											
	NORTH APRCH			EAST APRCH			SOUTH APRCH			WEST APRCH	
	APRCH	EXIT		APRCH	EXIT		APRCH	EXIT		APRCH	EXIT
630-730	14	1		108	84		4	0		69	110
645-745	10	0		105	89		5	0		76	107
700-800	9	0		102	88		4	0		77	104
715-815	5	0		99	88		4	0		81	101
730-830	4	0		84	84		3	0		78	85

WILTEC

Phone: (626) 564-1944 Fax: (626) 564-0969 info@wiltecusa.com

INTERSECTION CAR/PED/BIKE TRAFFIC COUNT RESULTS SUMMARY

CLIENT:		AFSHA CONSULTING
PROJECT:		LANCASTER/LEBEC TRAFFIC COUNTS
DATE:		WEDNESDAY DECEMBER 11, 2013
PERIOD:		6:30 AM TO 8:30 AM
INTERSECTION:	N/S	80TH STREET WEST SR-138
	E/W	WEST AVENUE D
CITY:		LANCASTER

VEHICLE COUNTS

15 MIN COUNTS	1	2	3	4	5	6	7	8	9	10	11	12	
PERIOD	SBRT	SBTH	SBLT	WBRT	WBTH	WBLT	NBRT	NBTH	NBLT	EBRT	EBTH	EBLT	TOTAL
630-645	0	0	2	0	24	0	2	0	0	0	17	0	45
645-700	0	1	1	0	26	1	1	0	0	0	14	0	44
700-715	0	0	1	0	23	1	1	0	1	1	28	0	56
715-730	0	0	0	1	29	1	0	0	0	0	21	0	52
730-745	1	2	0	0	22	1	0	0	0	0	24	0	50
745-800	0	1	2	2	22	1	2	0	0	0	18	0	48
800-815	0	0	0	1	19	1	3	0	1	0	25	0	50
815-830	0	0	1	1	19	0	1	0	0	0	19	0	41
HOUR TOTALS	1	2	3	4	5	6	7	8	9	10	11	12	
PERIOD	SBRT	SBTH	SBLT	WBRT	WBTH	WBLT	NBRT	NBTH	NBLT	EBRT	EBTH	EBLT	TOTAL
630-730	0	1	4	1	102	3	4	0	1	1	80	0	197
645-745	1	3	2	1	100	4	2	0	1	1	87	0	202
700-800	1	3	3	3	96	4	3	0	1	1	91	0	206
715-815	1	3	2	4	92	4	5	0	1	0	88	0	200
730-830	1	3	3	4	82	3	6	0	1	0	86	0	189

PEAK HOUR
700-800
PEAK HOUR FACTOR
0.92

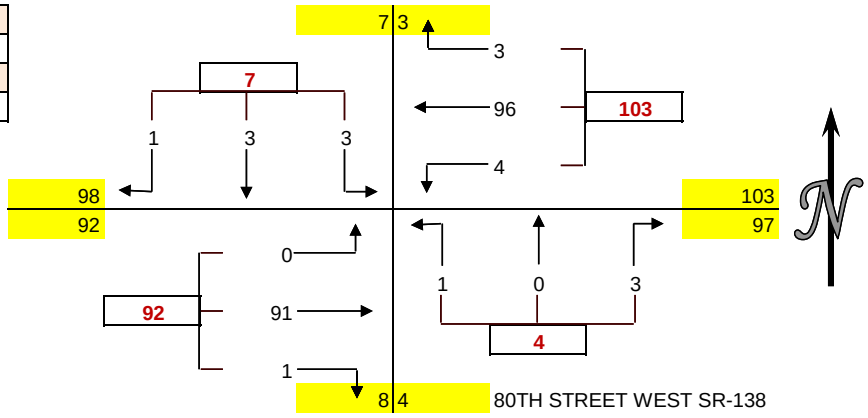

PEDESTRIAN COUNTS

15 MIN COUNTS	NORTH	EAST	SOUTH	WEST	TOTAL
PERIOD	LEG	LEG	LEG	LEG	
630-645	0	0	0	0	0
645-700	1	0	0	0	1
700-715	0	0	0	0	0
715-730	0	0	0	0	0
730-745	0	0	0	0	0
745-800	0	0	0	0	0
800-815	0	0	0	0	0
815-830	0	0	0	0	0
HOUR TOTALS	NORTH	EAST	SOUTH	WEST	TOTAL
PERIOD	LEG	LEG	LEG	LEG	
630-730	1	0	0	0	1
645-745	1	0	0	0	1
700-800	0	0	0	0	0
715-815	0	0	0	0	0
730-830	0	0	0	0	0

BICYCLE COUNTS

15 MIN COUNTS	NORTH	EAST	SOUTH	WEST	TOTAL
PERIOD	LEG	LEG	LEG	LEG	
630-645	0	0	0	0	0
645-700	0	0	0	0	0
700-715	0	0	0	0	0
715-730	0	0	0	0	0
730-745	0	0	0	0	0
745-800	0	0	0	0	0
800-815	0	0	0	0	0
815-830	0	0	0	0	0
HOUR TOTALS	NORTH	EAST	SOUTH	WEST	TOTAL
PERIOD	LEG	LEG	LEG	LEG	
630-730	0	0	0	0	0
645-745	0	0	0	0	0
700-800	0	0	0	0	0
715-815	0	0	0	0	0
730-830	0	0	0	0	0

APPROACH SUMMARIES											
	NORTH APRCH			EAST APRCH			SOUTH APRCH			WEST APRCH	
	APRCH	EXIT		APRCH	EXIT		APRCH	EXIT		APRCH	EXIT
630-730	5	1		106	88		5	5		81	103
645-745	6	1		105	91		3	8		88	102
700-800	7	3		103	97		4	8		92	98
715-815	6	4		100	95		6	7		88	94
730-830	7	4		89	95		7	6		86	84

WILTEC

Phone: (626) 564-1944 Fax: (626) 564-0969 info@wiltecusa.com

INTERSECTION CAR/PED/BIKE TRAFFIC COUNT RESULTS SUMMARY

CLIENT:		AFSHA CONSULTING
PROJECT:		LANCASTER/LEBEC TRAFFIC COUNTS
DATE:		WEDNESDAY DECEMBER 11, 2013
PERIOD:		6:30 AM TO 8:30 AM
INTERSECTION:	N/S	70TH STREET WEST SR-138
	E/W	WEST AVENUE D
CITY:		LANCASTER

VEHICLE COUNTS

15 MIN COUNTS	1	2	3	4	5	6	7	8	9	10	11	12	
PERIOD	SBRT	SBTH	SBLT	WBRT	WBTH	WBLT	NBRT	NBTH	NBLT	EBRT	EBTH	EBLT	TOTAL
630-645	0	2	0	0	26	1	0	0	0	0	22	0	51
645-700	1	2	2	1	22	0	2	1	0	1	21	0	53
700-715	0	5	0	0	24	0	0	0	0	3	25	0	57
715-730	0	3	5	0	24	0	1	3	0	1	24	0	61
730-745	0	1	3	0	17	0	0	3	0	0	26	0	50
745-800	0	2	1	2	20	2	1	3	1	0	21	0	53
800-815	0	2	3	0	23	0	0	2	0	0	31	0	61
815-830	0	1	1	0	23	0	0	2	0	0	21	0	48
HOUR TOTALS	1	2	3	4	5	6	7	8	9	10	11	12	
PERIOD	SBRT	SBTH	SBLT	WBRT	WBTH	WBLT	NBRT	NBTH	NBLT	EBRT	EBTH	EBLT	TOTAL
630-730	1	12	7	1	96	1	3	4	0	5	92	0	222
645-745	1	11	10	1	87	0	3	7	0	5	96	0	221
700-800	0	11	9	2	85	2	2	9	1	4	96	0	221
715-815	0	8	12	2	84	2	2	11	1	1	102	0	225
730-830	0	6	8	2	83	2	1	10	1	0	99	0	212

PEAK HOUR
715-815
PEAK HOUR FACTOR
0.92

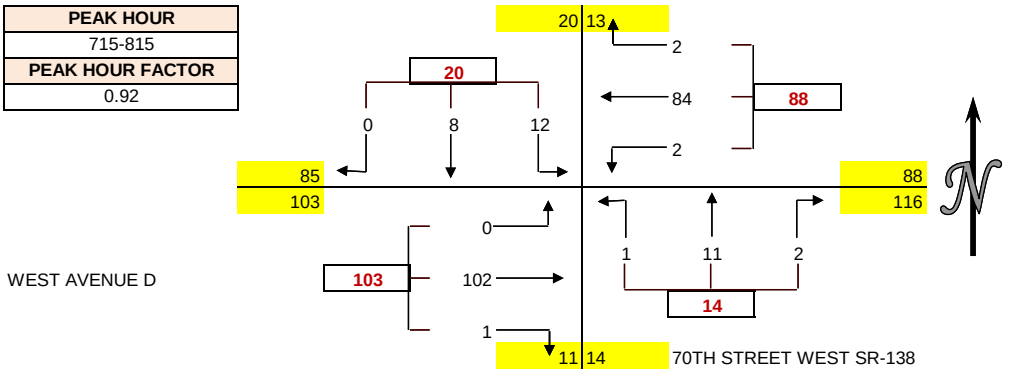

PEDESTRIAN COUNTS

15 MIN COUNTS	NORTH	EAST	SOUTH	WEST	TOTAL
PERIOD	LEG	LEG	LEG	LEG	
630-645	0	0	0	0	0
645-700	0	0	0	0	0
700-715	0	0	0	0	0
715-730	0	0	0	0	0
730-745	0	0	0	0	0
745-800	0	0	0	0	0
800-815	0	0	0	0	0
815-830	0	0	0	0	0
HOUR TOTALS	NORTH	EAST	SOUTH	WEST	TOTAL
PERIOD	LEG	LEG	LEG	LEG	
630-730	0	0	0	0	0
645-745	0	0	0	0	0
700-800	0	0	0	0	0
715-815	0	0	0	0	0
730-830	0	0	0	0	0

BICYCLE COUNTS

15 MIN COUNTS	NORTH	EAST	SOUTH	WEST	TOTAL
PERIOD	LEG	LEG	LEG	LEG	
630-645	0	0	0	0	0
645-700	0	0	0	0	0
700-715	0	0	0	0	0
715-730	0	0	0	0	0
730-745	0	0	0	0	0
745-800	0	0	0	0	0
800-815	0	0	0	0	0
815-830	0	0	0	0	0
HOUR TOTALS	NORTH	EAST	SOUTH	WEST	TOTAL
PERIOD	LEG	LEG	LEG	LEG	
630-730	0	0	0	0	0
645-745	0	0	0	0	0
700-800	0	0	0	0	0
715-815	0	0	0	0	0
730-830	0	0	0	0	0

APPROACH SUMMARIES

	NORTH APRCH			EAST APRCH			SOUTH APRCH			WEST APRCH	
	APRCH	EXIT		APRCH	EXIT		APRCH	EXIT		APRCH	EXIT
630-730	20	5		98	102		7	18		97	97
645-745	22	8		88	109		10	16		101	88
700-800	20	11		89	107		12	17		100	86
715-815	20	13		88	116		14	11		103	85
730-830	14	12		87	108		12	8		99	84

WILTEC

Phone: (626) 564-1944 Fax: (626) 564-0969 info@wiltecusa.com

INTERSECTION CAR/PED/BIKE TRAFFIC COUNT RESULTS SUMMARY

CLIENT:		AFSHA CONSULTING
PROJECT:		LANCASTER/LEBEC TRAFFIC COUNTS
DATE:		WEDNESDAY DECEMBER 11, 2013
PERIOD:		6:30 AM TO 8:30 AM
INTERSECTION:	N/S	60TH STREET WEST SR-138
	E/W	WEST AVENUE D
CITY:		LANCASTER

VEHICLE COUNTS

15 MIN COUNTS	1	2	3	4	5	6	7	8	9	10	11	12	
PERIOD	SBRT	SBTH	SBLT	WBRT	WBTH	WBLT	NBRT	NBTH	NBLT	EBRT	EBTH	EBLT	TOTAL
630-645	0	13	0	2	22	0	2	3	1	6	17	1	67
645-700	0	19	0	1	32	0	0	5	3	5	20	0	85
700-715	0	19	0	1	20	1	3	5	2	7	24	0	82
715-730	1	15	1	0	17	0	3	8	3	7	26	0	81
730-745	0	6	2	2	23	0	1	9	2	4	22	1	72
745-800	0	15	2	0	19	1	0	2	0	5	22	1	67
800-815	0	13	0	1	22	0	0	3	2	3	30	0	74
815-830	0	6	0	0	23	0	2	3	0	0	20	0	54
HOUR TOTALS	1	2	3	4	5	6	7	8	9	10	11	12	
PERIOD	SBRT	SBTH	SBLT	WBRT	WBTH	WBLT	NBRT	NBTH	NBLT	EBRT	EBTH	EBLT	TOTAL
630-730	1	66	1	4	91	1	8	21	9	25	87	1	315
645-745	1	59	3	4	92	1	7	27	10	23	92	1	320
700-800	1	55	5	3	79	2	7	24	7	23	94	2	302
715-815	1	49	5	3	81	1	4	22	7	19	100	2	294
730-830	0	40	4	3	87	1	3	17	4	12	94	2	267

PEAK HOUR
645-745
PEAK HOUR FACTOR
0.94

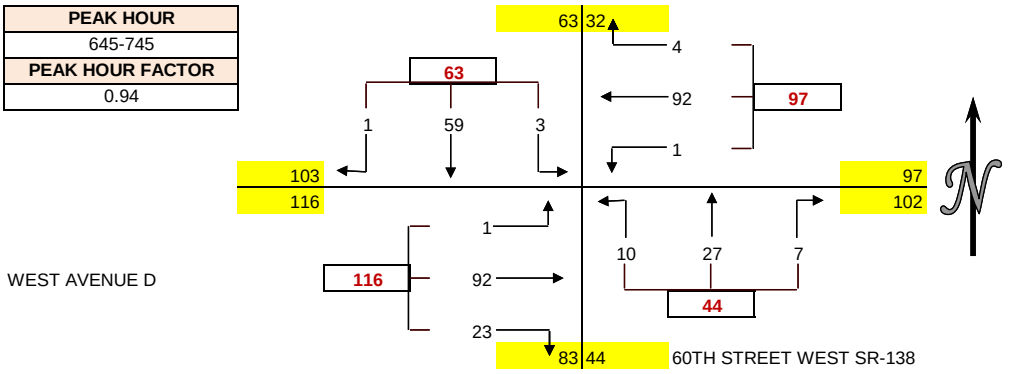

PEDESTRIAN COUNTS

15 MIN COUNTS	NORTH	EAST	SOUTH	WEST	TOTAL
PERIOD	LEG	LEG	LEG	LEG	
630-645	0	0	0	0	0
645-700	0	0	0	0	0
700-715	0	0	0	0	0
715-730	0	0	0	0	0
730-745	0	0	0	0	0
745-800	0	0	0	0	0
800-815	0	0	0	0	0
815-830	0	0	0	0	0
HOUR TOTALS	NORTH	EAST	SOUTH	WEST	TOTAL
PERIOD	LEG	LEG	LEG	LEG	
630-730	0	0	0	0	0
645-745	0	0	0	0	0
700-800	0	0	0	0	0
715-815	0	0	0	0	0
730-830	0	0	0	0	0

BICYCLE COUNTS

15 MIN COUNTS	NORTH	EAST	SOUTH	WEST	TOTAL
PERIOD	LEG	LEG	LEG	LEG	
630-645	0	0	0	0	0
645-700	0	0	0	0	0
700-715	0	0	0	0	0
715-730	0	0	0	0	0
730-745	0	0	0	0	0
745-800	0	0	0	0	0
800-815	0	0	0	0	0
815-830	0	0	0	0	0
HOUR TOTALS	NORTH	EAST	SOUTH	WEST	TOTAL
PERIOD	LEG	LEG	LEG	LEG	
630-730	0	0	0	0	0
645-745	0	0	0	0	0
700-800	0	0	0	0	0
715-815	0	0	0	0	0
730-830	0	0	0	0	0

APPROACH SUMMARIES

	NORTH APRCH			EAST APRCH			SOUTH APRCH			WEST APRCH	
	APRCH	EXIT		APRCH	EXIT		APRCH	EXIT		APRCH	EXIT
630-730	68	26		96	96		38	92		113	101
645-745	63	32		97	102		44	83		116	103
700-800	61	29		84	106		38	80		119	87
715-815	55	27		85	109		33	69		121	89
730-830	44	22		91	101		24	53		108	91

WILTEC

Phone: (626) 564-1944 Fax: (626) 564-0969 info@wiltecusa.com

INTERSECTION CAR/PED/BIKE TRAFFIC COUNT RESULTS SUMMARY

CLIENT:		AFSHA CONSULTING
PROJECT:		LANCASTER/LEBEC TRAFFIC COUNTS
DATE:		WEDNESDAY DECEMBER 11, 2013
PERIOD:		6:30 AM TO 8:30 AM
INTERSECTION:	N/S	30TH STREET WEST SR-138
	E/W	WEST AVENUE D
CITY:		LANCASTER

VEHICLE COUNTS

15 MIN COUNTS	1	2	3	4	5	6	7	8	9	10	11	12	
PERIOD	SBRT	SBTH	SBLT	WBRT	WBTH	WBLT	NBRT	NBTH	NBLT	EBRT	EBTH	EBLT	TOTAL
630-645	0	0	0	0	26	0	0	0	0	0	20	0	46
645-700	0	0	0	0	20	0	1	0	1	0	23	0	45
700-715	0	0	0	0	27	0	0	1	0	0	22	0	50
715-730	0	1	0	0	20	0	0	0	0	0	28	0	49
730-745	0	0	0	0	23	0	1	1	2	0	21	0	48
745-800	0	0	0	0	20	2	0	0	0	0	20	0	42
800-815	0	0	0	0	18	0	0	0	0	0	30	0	48
815-830	0	0	0	0	23	1	0	0	0	0	26	0	50
HOUR TOTALS	1	2	3	4	5	6	7	8	9	10	11	12	
PERIOD	SBRT	SBTH	SBLT	WBRT	WBTH	WBLT	NBRT	NBTH	NBLT	EBRT	EBTH	EBLT	TOTAL
630-730	0	1	0	0	93	0	1	1	1	0	93	0	190
645-745	0	1	0	0	90	0	2	2	3	0	94	0	192
700-800	0	1	0	0	90	2	1	2	2	0	91	0	189
715-815	0	1	0	0	81	2	1	1	2	0	99	0	187
730-830	0	0	0	0	84	3	1	1	2	0	97	0	188

PEAK HOUR
645-745
PEAK HOUR FACTOR
0.96

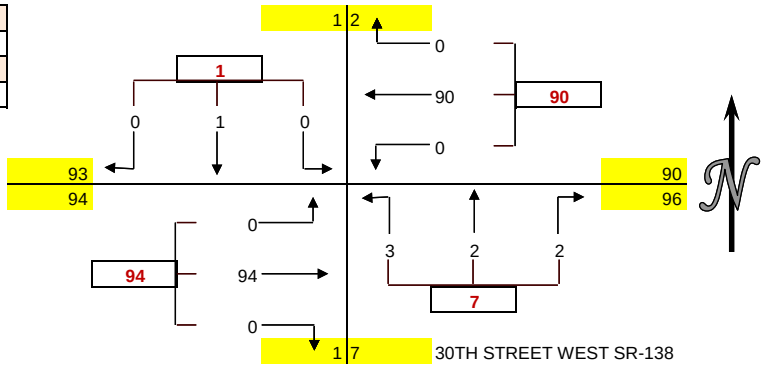

PEDESTRIAN COUNTS

15 MIN COUNTS	NORTH	EAST	SOUTH	WEST	TOTAL
PERIOD	LEG	LEG	LEG	LEG	
630-645	0	0	0	0	0
645-700	0	0	0	0	0
700-715	0	0	0	0	0
715-730	0	0	0	0	0
730-745	0	0	0	0	0
745-800	0	0	0	0	0
800-815	0	0	0	0	0
815-830	0	0	0	0	0
HOUR TOTALS	NORTH	EAST	SOUTH	WEST	TOTAL
PERIOD	LEG	LEG	LEG	LEG	
630-730	0	0	0	0	0
645-745	0	0	0	0	0
700-800	0	0	0	0	0
715-815	0	0	0	0	0
730-830	0	0	0	0	0

BICYCLE COUNTS

15 MIN COUNTS	NORTH	EAST	SOUTH	WEST	TOTAL
PERIOD	LEG	LEG	LEG	LEG	
630-645	0	0	0	0	0
645-700	0	0	0	0	0
700-715	0	0	0	0	0
715-730	0	0	0	0	0
730-745	0	0	0	0	0
745-800	0	0	0	0	0
800-815	0	0	0	0	0
815-830	0	0	0	0	0
HOUR TOTALS	NORTH	EAST	SOUTH	WEST	TOTAL
PERIOD	LEG	LEG	LEG	LEG	
630-730	0	0	0	0	0
645-745	0	0	0	0	0
700-800	0	0	0	0	0
715-815	0	0	0	0	0
730-830	0	0	0	0	0

APPROACH SUMMARIES

	NORTH APRCH			EAST APRCH			SOUTH APRCH			WEST APRCH	
	APRCH	EXIT		APRCH	EXIT		APRCH	EXIT		APRCH	EXIT
630-730	1	1		93	94		3	1		93	94
645-745	1	2		90	96		7	1		94	93
700-800	1	2		92	92		5	3		91	92
715-815	1	1		83	100		4	3		99	83
730-830	0	1		87	98		4	3		97	86

WILTEC

Phone: (626) 564-1944 Fax: (626) 564-0969 info@wiltecusa.com

INTERSECTION CAR/PED/BIKE TRAFFIC COUNT RESULTS SUMMARY

CLIENT:		AFSHA CONSULTING
PROJECT:		LANCASTER/LEBEC TRAFFIC COUNTS
DATE:		WEDNESDAY DECEMBER 11, 2013
PERIOD:		6:30 AM TO 8:30 AM
INTERSECTION:	N/S	SR-14 SOUTHBOUND RAMPS SR-138
	E/W	WEST AVENUE D
CITY:		LANCASTER

VEHICLE COUNTS

15 MIN COUNTS	1	2	3	4	5	6	7	8	9	10	11	12	
PERIOD	SBRT	SBTH	SBLT	WBRT	WBTH	WBLT	NBRT	NBTH	NBLT	EBRT	EBTH	EBLT	TOTAL
630-645	2	0	9	0	23	1	0	0	0	7	13	0	55
645-700	1	0	3	0	18	1	0	0	0	15	10	0	48
700-715	2	0	6	0	26	0	0	0	0	13	8	0	55
715-730	2	0	3	0	20	0	0	0	0	14	10	0	49
730-745	2	1	2	0	24	0	0	0	0	16	12	0	57
745-800	4	1	2	0	17	0	0	0	0	12	4	0	40
800-815	3	0	2	0	16	0	0	0	0	21	9	0	51
815-830	1	0	5	0	23	2	0	0	0	16	8	0	55
HOUR TOTALS	1	2	3	4	5	6	7	8	9	10	11	12	
PERIOD	SBRT	SBTH	SBLT	WBRT	WBTH	WBLT	NBRT	NBTH	NBLT	EBRT	EBTH	EBLT	TOTAL
630-730	7	0	21	0	87	2	0	0	0	49	41	0	207
645-745	7	1	14	0	88	1	0	0	0	58	40	0	209
700-800	10	2	13	0	87	0	0	0	0	55	34	0	201
715-815	11	2	9	0	77	0	0	0	0	63	35	0	197
730-830	10	2	11	0	80	2	0	0	0	65	33	0	203

PEAK HOUR
645-745
PEAK HOUR FACTOR
0.92

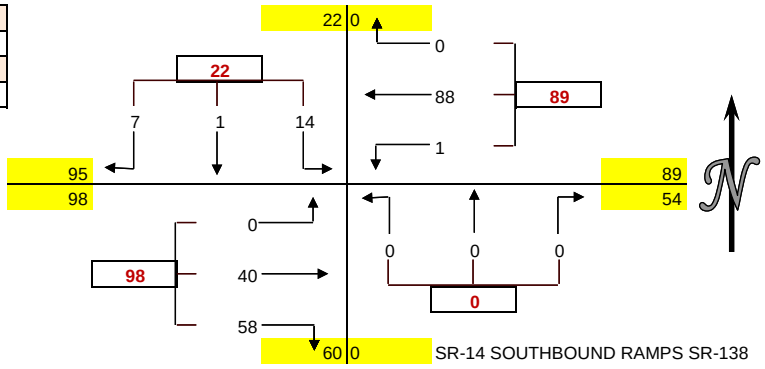

PEDESTRIAN COUNTS

15 MIN COUNTS	NORTH	EAST	SOUTH	WEST	TOTAL
PERIOD	LEG	LEG	LEG	LEG	
630-645	0	0	0	0	0
645-700	0	0	0	0	0
700-715	0	0	0	0	0
715-730	0	0	0	0	0
730-745	0	0	0	0	0
745-800	0	0	0	0	0
800-815	0	0	0	0	0
815-830	0	0	0	0	0
HOUR TOTALS	NORTH	EAST	SOUTH	WEST	TOTAL
PERIOD	LEG	LEG	LEG	LEG	
630-730	0	0	0	0	0
645-745	0	0	0	0	0
700-800	0	0	0	0	0
715-815	0	0	0	0	0
730-830	0	0	0	0	0

BICYCLE COUNTS

15 MIN COUNTS	NORTH	EAST	SOUTH	WEST	TOTAL
PERIOD	LEG	LEG	LEG	LEG	
630-645	0	0	0	0	0
645-700	0	0	0	0	0
700-715	0	0	0	0	0
715-730	0	0	0	0	0
730-745	0	0	0	0	0
745-800	0	0	0	0	0
800-815	0	0	0	0	0
815-830	0	0	0	0	0
HOUR TOTALS	NORTH	EAST	SOUTH	WEST	TOTAL
PERIOD	LEG	LEG	LEG	LEG	
630-730	0	0	0	0	0
645-745	0	0	0	0	0
700-800	0	0	0	0	0
715-815	0	0	0	0	0
730-830	0	0	0	0	0

APPROACH SUMMARIES

	NORTH APRCH			EAST APRCH			SOUTH APRCH			WEST APRCH	
	APRCH	EXIT		APRCH	EXIT		APRCH	EXIT		APRCH	EXIT
630-730	28	0		89	62		0	51		90	94
645-745	22	0		89	54		0	60		98	95
700-800	25	0		87	47		0	57		89	97
715-815	22	0		77	44		0	65		98	88
730-830	23	0		82	44		0	69		98	90

WILTEC

Phone: (626) 564-1944 Fax: (626) 564-0969 info@wiltecusa.com

INTERSECTION CAR/PED/BIKE TRAFFIC COUNT RESULTS SUMMARY

CLIENT:		AFSHA CONSULTING
PROJECT:		LANCASTER/LEBEC TRAFFIC COUNTS
DATE:		WEDNESDAY DECEMBER 11, 2013
PERIOD:		6:30 AM TO 8:30 AM
INTERSECTION:	N/S	SR-14 NORTHBOUND RAMPS SR-138
	E/W	WEST AVENUE D
CITY:		LANCASTER

VEHICLE COUNTS

15 MIN COUNTS	1	2	3	4	5	6	7	8	9	10	11	12	
PERIOD	SBRT	SBTH	SBLT	WBRT	WBTH	WBLT	NBRT	NBTH	NBLT	EBRT	EBTH	EBLT	TOTAL
630-645	0	0	0	3	7	0	3	0	18	3	15	0	49
645-700	0	0	0	4	4	0	3	0	11	4	11	0	37
700-715	0	0	0	5	6	0	0	0	21	3	11	0	46
715-730	0	0	0	3	5	0	0	0	15	6	8	0	37
730-745	0	0	0	3	9	0	1	0	12	3	8	0	36
745-800	0	0	0	6	3	0	1	0	16	3	3	0	32
800-815	0	0	0	1	6	0	0	0	10	3	10	0	30
815-830	0	0	0	4	10	0	2	0	14	6	8	0	44
HOUR TOTALS	1	2	3	4	5	6	7	8	9	10	11	12	
PERIOD	SBRT	SBTH	SBLT	WBRT	WBTH	WBLT	NBRT	NBTH	NBLT	EBRT	EBTH	EBLT	TOTAL
630-730	0	0	0	15	22	0	6	0	65	16	45	0	169
645-745	0	0	0	15	24	0	4	0	59	16	38	0	156
700-800	0	0	0	17	23	0	2	0	64	15	30	0	151
715-815	0	0	0	13	23	0	2	0	53	15	29	0	135
730-830	0	0	0	14	28	0	4	0	52	15	29	0	142

PEAK HOUR
630-730
PEAK HOUR FACTOR
0.86

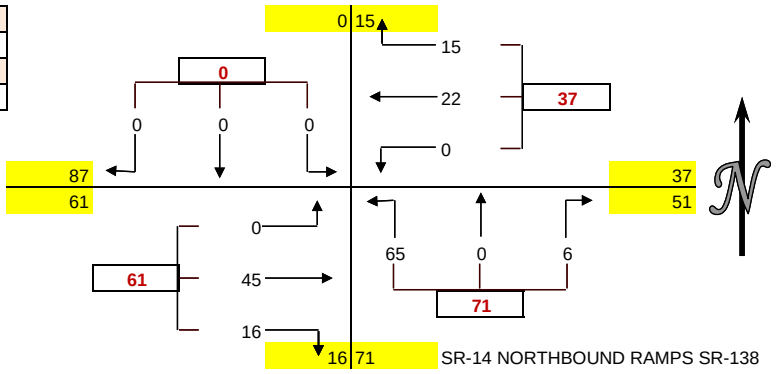

PEDESTRIAN COUNTS

15 MIN COUNTS	NORTH	EAST	SOUTH	WEST	TOTAL
PERIOD	LEG	LEG	LEG	LEG	
630-645	0	0	0	0	0
645-700	0	0	0	0	0
700-715	0	0	0	0	0
715-730	0	0	0	0	0
730-745	0	0	0	0	0
745-800	0	0	0	0	0
800-815	0	0	0	0	0
815-830	0	0	0	0	0
HOUR TOTALS	NORTH	EAST	SOUTH	WEST	TOTAL
PERIOD	LEG	LEG	LEG	LEG	
630-730	0	0	0	0	0
645-745	0	0	0	0	0
700-800	0	0	0	0	0
715-815	0	0	0	0	0
730-830	0	0	0	0	0

BICYCLE COUNTS

15 MIN COUNTS	NORTH	EAST	SOUTH	WEST	TOTAL
PERIOD	LEG	LEG	LEG	LEG	
630-645	0	0	0	0	0
645-700	0	0	0	0	0
700-715	0	0	0	0	0
715-730	0	0	0	0	0
730-745	0	0	0	0	0
745-800	0	0	0	0	0
800-815	0	0	0	0	0
815-830	0	0	0	0	0
HOUR TOTALS	NORTH	EAST	SOUTH	WEST	TOTAL
PERIOD	LEG	LEG	LEG	LEG	
630-730	0	0	0	0	0
645-745	0	0	0	0	0
700-800	0	0	0	0	0
715-815	0	0	0	0	0
730-830	0	0	0	0	0

APPROACH SUMMARIES

	NORTH APRCH			EAST APRCH			SOUTH APRCH			WEST APRCH	
	APRCH	EXIT		APRCH	EXIT		APRCH	EXIT		APRCH	EXIT
630-730	0	15		37	51		71	16		61	87
645-745	0	15		39	42		63	16		54	83
700-800	0	17		40	32		66	15		45	87
715-815	0	13		36	31		55	15		44	76
730-830	0	14		42	33		56	15		44	80

WILTEC

Phone: (626) 564-1944 Fax: (626) 564-0969 info@wiltecusa.com

INTERSECTION CAR/PED/BIKE TRAFFIC COUNT RESULTS SUMMARY

CLIENT:		AFSHA CONSULTING
PROJECT:		LANCASTER/LEBEC TRAFFIC COUNTS
DATE:		WEDNESDAY DECEMBER 11, 2013
PERIOD:		3:30 PM TO 5:30 PM
INTERSECTION:	N/S	GORMAN POST ROAD
	E/W	SR-138/LANCASTER ROAD
CITY:		LEBEC

VEHICLE COUNTS

15 MIN COUNTS	1	2	3	4	5	6	7	8	9	10	11	12	
PERIOD	SBRT	SBTH	SBLT	WBRT	WBTH	WBLT	NBRT	NBTH	NBLT	EBRT	EBTH	EBLT	TOTAL
330-345	0	0	1	5	40	0	0	0	0	0	34	0	80
345-400	1	0	4	9	42	0	0	0	0	0	27	0	83
400-415	0	0	2	5	23	0	0	0	0	0	36	0	66
415-430	0	0	3	0	20	0	0	0	0	0	35	0	58
430-445	1	0	3	1	31	0	0	0	0	0	27	0	63
445-500	1	0	3	1	17	0	0	0	0	0	32	0	54
500-515	0	0	2	2	23	0	0	0	0	0	29	0	56
515-530	0	0	0	3	27	0	0	0	0	0	30	0	60
HOUR TOTALS	1	2	3	4	5	6	7	8	9	10	11	12	
PERIOD	SBRT	SBTH	SBLT	WBRT	WBTH	WBLT	NBRT	NBTH	NBLT	EBRT	EBTH	EBLT	TOTAL
330-430	1	0	10	19	125	0	0	0	0	0	132	0	287
345-445	2	0	12	15	116	0	0	0	0	0	125	0	270
400-500	2	0	11	7	91	0	0	0	0	0	130	0	241
415-515	2	0	11	4	91	0	0	0	0	0	123	0	231
430-530	2	0	8	7	98	0	0	0	0	0	118	0	233

PEAK HOUR
330-430
PEAK HOUR FACTOR
0.86

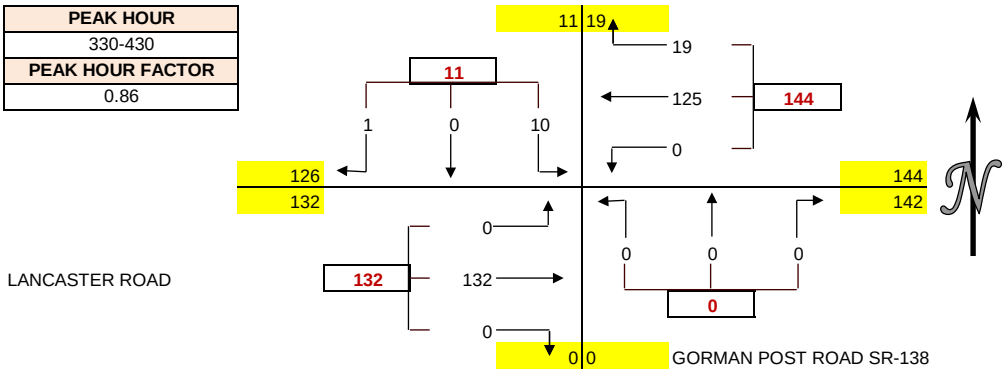

PEDESTRIAN COUNTS

15 MIN COUNTS	NORTH	EAST	SOUTH	WEST	TOTAL
PERIOD	LEG	LEG	LEG	LEG	
330-345	0	0	0	0	0
345-400	0	0	0	0	0
400-415	0	0	0	0	0
415-430	0	0	0	0	0
430-445	0	0	0	0	0
445-500	0	0	0	0	0
500-515	0	0	0	0	0
515-530	0	0	0	0	0
HOUR TOTALS	NORTH	EAST	SOUTH	WEST	TOTAL
PERIOD	LEG	LEG	LEG	LEG	
330-430	0	0	0	0	0
345-445	0	0	0	0	0
400-500	0	0	0	0	0
415-515	0	0	0	0	0
430-530	0	0	0	0	0

BICYCLE COUNTS

15 MIN COUNTS	NORTH	EAST	SOUTH	WEST	TOTAL
PERIOD	LEG	LEG	LEG	LEG	
330-345	0	0	0	0	0
345-400	0	0	0	0	0
400-415	0	0	0	0	0
415-430	0	0	0	0	0
430-445	0	0	0	0	0
445-500	0	0	0	0	0
500-515	0	0	0	0	0
515-530	0	0	0	0	0
HOUR TOTALS	NORTH	EAST	SOUTH	WEST	TOTAL
PERIOD	LEG	LEG	LEG	LEG	
330-430	0	0	0	0	0
345-445	0	0	0	0	0
400-500	0	0	0	0	0
415-515	0	0	0	0	0
430-530	0	0	0	0	0

APPROACH SUMMARIES

	NORTH APRCH			EAST APRCH			SOUTH APRCH			WEST APRCH	
	APRCH	EXIT		APRCH	EXIT		APRCH	EXIT		APRCH	EXIT
330-430	11	19		144	142		0	0		132	126
345-445	14	15		131	137		0	0		125	118
400-500	13	7		98	141		0	0		130	93
415-515	13	4		95	134		0	0		123	93
430-530	10	7		105	126		0	0		118	100

WILTEC

Phone: (626) 564-1944 Fax: (626) 564-0969 info@wiltecusa.com

INTERSECTION CAR/PED/BIKE TRAFFIC COUNT RESULTS SUMMARY

CLIENT:		AFSHA CONSULTING
PROJECT:		LANCASTER/LEBEC TRAFFIC COUNTS
DATE:		WEDNESDAY DECEMBER 11, 2013
PERIOD:		3:30 PM TO 5:30 PM
INTERSECTION:	N/S	OLD RIDGE ROUTE
	E/W	SR-138/LANCASTER ROAD
CITY:		LOS ANGELES COUNTY

VEHICLE COUNTS

15 MIN COUNTS	1	2	3	4	5	6	7	8	9	10	11	12	
PERIOD	SBRT	SBTH	SBLT	WBRT	WBTH	WBLT	NBRT	NBTH	NBLT	EBRT	EBTH	EBLT	TOTAL
330-345	0	0	0	0	41	0	0	0	1	1	35	0	78
345-400	0	0	0	0	40	0	0	0	2	0	31	0	73
400-415	0	0	0	0	32	0	1	0	1	1	36	0	71
415-430	0	0	0	0	26	0	0	0	0	0	34	0	60
430-445	0	0	0	0	25	0	0	0	0	0	36	0	61
445-500	0	0	0	0	24	1	1	0	0	1	33	0	60
500-515	0	0	0	0	30	0	0	0	0	0	30	0	60
515-530	0	0	0	0	26	0	0	0	1	2	31	0	60
HOUR TOTALS	1	2	3	4	5	6	7	8	9	10	11	12	
PERIOD	SBRT	SBTH	SBLT	WBRT	WBTH	WBLT	NBRT	NBTH	NBLT	EBRT	EBTH	EBLT	TOTAL
330-430	0	0	0	0	139	0	1	0	4	2	136	0	282
345-445	0	0	0	0	123	0	1	0	3	1	137	0	265
400-500	0	0	0	0	107	1	2	0	1	2	139	0	252
415-515	0	0	0	0	105	1	1	0	0	1	133	0	241
430-530	0	0	0	0	105	1	1	0	1	3	130	0	241

PEAK HOUR
330-430
PEAK HOUR FACTOR
0.90

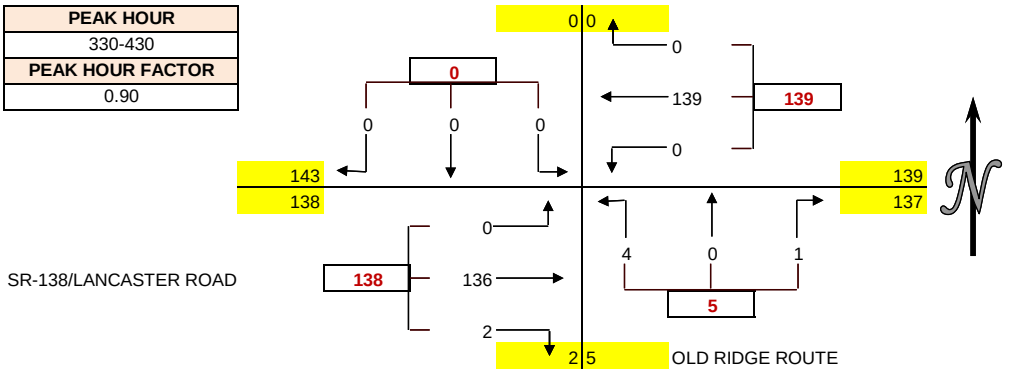

PEDESTRIAN COUNTS

15 MIN COUNTS	NORTH	EAST	SOUTH	WEST	TOTAL
PERIOD	LEG	LEG	LEG	LEG	
330-345	0	0	0	0	0
345-400	0	0	0	0	0
400-415	0	0	0	0	0
415-430	0	0	0	0	0
430-445	0	0	0	0	0
445-500	0	0	0	0	0
500-515	0	0	0	0	0
515-530	0	0	0	0	0
HOUR TOTALS	NORTH	EAST	SOUTH	WEST	TOTAL
PERIOD	LEG	LEG	LEG	LEG	
330-430	0	0	0	0	0
345-445	0	0	0	0	0
400-500	0	0	0	0	0
415-515	0	0	0	0	0
430-530	0	0	0	0	0

BICYCLE COUNTS

15 MIN COUNTS	NORTH	EAST	SOUTH	WEST	TOTAL
PERIOD	LEG	LEG	LEG	LEG	
330-345	0	0	0	0	0
345-400	0	0	0	0	0
400-415	0	0	0	0	0
415-430	0	0	0	0	0
430-445	0	0	0	0	0
445-500	0	0	0	0	0
500-515	0	0	0	0	0
515-530	0	0	0	0	0
HOUR TOTALS	NORTH	EAST	SOUTH	WEST	TOTAL
PERIOD	LEG	LEG	LEG	LEG	
330-430	0	0	0	0	0
345-445	0	0	0	0	0
400-500	0	0	0	0	0
415-515	0	0	0	0	0
430-530	0	0	0	0	0

APPROACH SUMMARIES

	NORTH APRCH			EAST APRCH			SOUTH APRCH			WEST APRCH	
	APRCH	EXIT		APRCH	EXIT		APRCH	EXIT		APRCH	EXIT
330-430	0	0		139	137		5	2		138	143
345-445	0	0		123	138		4	1		138	126
400-500	0	0		108	141		3	3		141	108
415-515	0	0		106	134		1	2		134	105
430-530	0	0		106	131		2	4		133	106

WILTEC

Phone: (626) 564-1944 Fax: (626) 564-0969 info@wiltecusa.com

INTERSECTION CAR/PED/BIKE TRAFFIC COUNT RESULTS SUMMARY

CLIENT:		AFSHA CONSULTING
PROJECT:		LANCASTER/LEBEC TRAFFIC COUNTS
DATE:		WEDNESDAY DECEMBER 11, 2013
PERIOD:		3:30 PM TO 5:30 PM
INTERSECTION:	N/S	UNNAMED ROAD 3000' EAST OF OLD RIDGE ROUTE
	E/W	SR-138/LANCASTER ROAD
CITY:		LOS ANGELES COUNTY

VEHICLE COUNTS

15 MIN COUNTS	1	2	3	4	5	6	7	8	9	10	11	12	
PERIOD	SBRT	SBTH	SBLT	WBRT	WBTH	WBLT	NBRT	NBTH	NBLT	EBRT	EBTH	EBLT	TOTAL
330-345	5	0	1	0	28	0	0	0	0	0	27	0	61
345-400	3	0	2	0	33	0	0	0	0	0	39	0	77
400-415	15	0	9	0	31	0	0	0	0	0	39	2	96
415-430	4	0	2	0	26	0	0	0	0	0	29	1	62
430-445	3	0	1	0	24	0	0	0	0	0	28	1	57
445-500	1	0	2	0	19	0	0	0	0	0	33	3	58
500-515	2	0	0	1	23	0	0	0	0	0	33	1	60
515-530	3	0	0	0	24	0	0	0	0	0	28	2	57
HOUR TOTALS	1	2	3	4	5	6	7	8	9	10	11	12	
PERIOD	SBRT	SBTH	SBLT	WBRT	WBTH	WBLT	NBRT	NBTH	NBLT	EBRT	EBTH	EBLT	TOTAL
330-430	27	0	14	0	118	0	0	0	0	0	134	3	296
345-445	25	0	14	0	114	0	0	0	0	0	135	4	292
400-500	23	0	14	0	100	0	0	0	0	0	129	7	273
415-515	10	0	5	1	92	0	0	0	0	0	123	6	237
430-530	9	0	3	1	90	0	0	0	0	0	122	7	232

PEAK HOUR
330-430
PEAK HOUR FACTOR
0.77

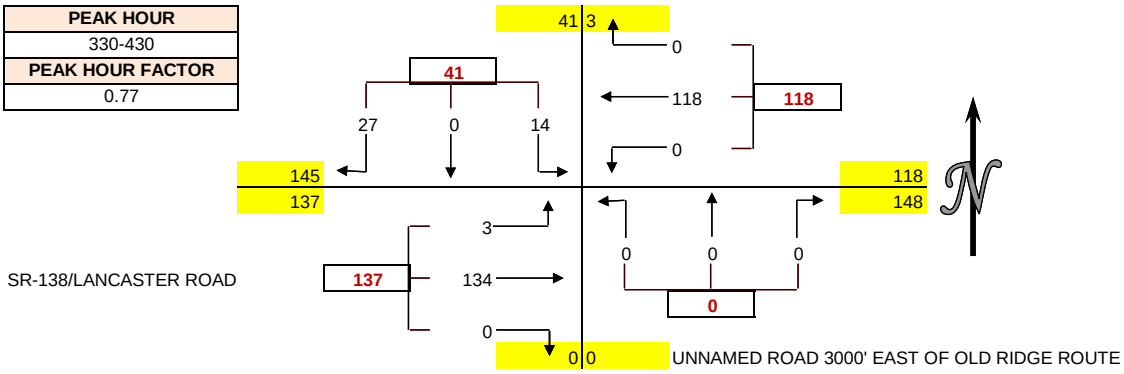

PEDESTRIAN COUNTS

15 MIN COUNTS	NORTH	EAST	SOUTH	WEST	TOTAL
PERIOD	LEG	LEG	LEG	LEG	
330-345	0	0	0	0	0
345-400	0	0	0	0	0
400-415	0	0	0	0	0
415-430	0	0	0	0	0
430-445	0	0	0	0	0
445-500	0	0	0	0	0
500-515	0	0	0	0	0
515-530	0	0	0	0	0
HOUR TOTALS	NORTH	EAST	SOUTH	WEST	TOTAL
PERIOD	LEG	LEG	LEG	LEG	
330-430	0	0	0	0	0
345-445	0	0	0	0	0
400-500	0	0	0	0	0
415-515	0	0	0	0	0
430-530	0	0	0	0	0

BICYCLE COUNTS

15 MIN COUNTS	NORTH	EAST	SOUTH	WEST	TOTAL
PERIOD	LEG	LEG	LEG	LEG	
330-345	0	0	0	0	0
345-400	0	0	0	0	0
400-415	0	0	0	0	0
415-430	0	0	0	0	0
430-445	0	0	0	0	0
445-500	0	0	0	0	0
500-515	0	0	0	0	0
515-530	0	0	0	0	0
HOUR TOTALS	NORTH	EAST	SOUTH	WEST	TOTAL
PERIOD	LEG	LEG	LEG	LEG	
330-430	0	0	0	0	0
345-445	0	0	0	0	0
400-500	0	0	0	0	0
415-515	0	0	0	0	0
430-530	0	0	0	0	0

APPROACH SUMMARIES

	NORTH APRCH			EAST APRCH			SOUTH APRCH			WEST APRCH	
	APRCH	EXIT		APRCH	EXIT		APRCH	EXIT		APRCH	EXIT
330-430	41	3		118	148		0	0		137	145
345-445	39	4		114	149		0	0		139	139
400-500	37	7		100	143		0	0		136	123
415-515	15	7		93	128		0	0		129	102
430-530	12	8		91	125		0	0		129	99

WILTEC

Phone: (626) 564-1944 Fax: (626) 564-0969 info@wiltecusa.com

INTERSECTION CAR/PED/BIKE TRAFFIC COUNT RESULTS SUMMARY

CLIENT:		KIMLEY-HORN
PROJECT:		SR-138 PA&ED
DATE:		12/4/2013
PERIOD:		3:30 PM TO 5:30 PM
INTERSECTION:	N/S	300TH STREET
	E/W	WEST AVENUE D
CITY:		LANCASTER

VEHICLE COUNTS

15 MIN COUNTS	1	2	3	4	5	6	7	8	9	10	11	12	
PERIOD	SBRT	SBTH	SBLT	WBRT	WBTH	WBLT	NBRT	NBTH	NBLT	EBRT	EBTH	EBLT	TOTAL
330-345	1	0	3	0	30	0	0	0	0	0	33	0	67
345-400	4	0	3	2	15	0	0	0	0	0	33	1	58
400-415	0	0	1	1	20	0	0	0	0	0	37	0	59
415-430	0	0	1	1	25	0	0	0	0	0	30	0	57
430-445	1	0	5	1	14	0	0	0	0	0	38	0	59
445-500	0	0	0	1	15	0	0	0	0	0	32	0	48
500-515	0	0	2	0	24	0	0	0	0	0	35	1	62
515-530	1	0	1	1	12	0	0	0	0	0	33	0	48
HOUR TOTALS													
PERIOD	SBRT	SBTH	SBLT	WBRT	WBTH	WBLT	NBRT	NBTH	NBLT	EBRT	EBTH	EBLT	TOTAL
330-430	5	0	8	4	90	0	0	0	0	0	133	1	241
345-445	5	0	10	5	74	0	0	0	0	0	138	1	233
400-500	1	0	7	4	74	0	0	0	0	0	137	0	223
415-515	1	0	8	3	78	0	0	0	0	0	135	1	226
430-530	2	0	8	3	65	0	0	0	0	0	138	1	217

PEAK HOUR
330-430
PEAK HOUR FACTOR
0.90

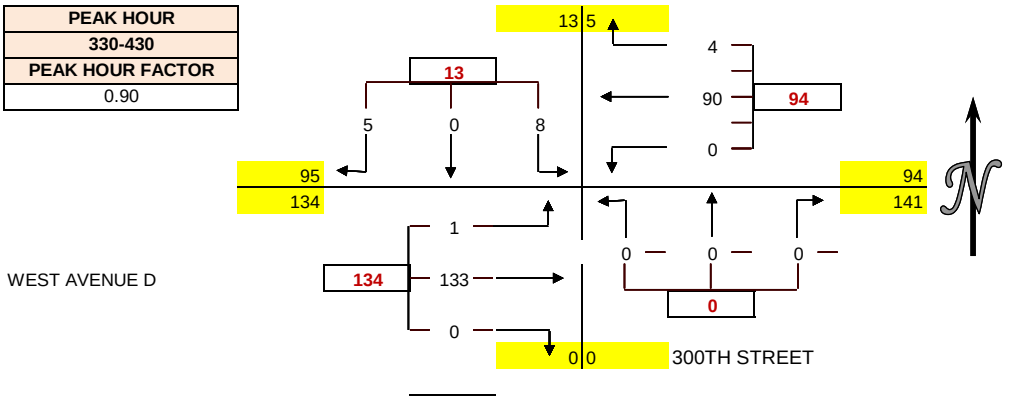

APPROACH SUMMARIES

	NORTH LEG			EAST LEG			SOUTH LEG			WEST LEG	
	APRCH	DEPR		APRCH	DEPR		APRCH	DEPR		APRCH	DEPR
330-430	13	5		94	141		0	0		134	95
345-445	15	6		79	148		0	0		139	79
400-500	8	4		78	144		0	0		137	75
415-515	9	4		81	143		0	0		136	79
430-530	10	4		68	146		0	0		139	67

WILTEC

Phone: (626) 564-1944 Fax: (626) 564-0969 info@wiltecusa.com

INTERSECTION CAR/PED/BIKE TRAFFIC COUNT RESULTS SUMMARY

CLIENT:		KIMLEY-HORN
PROJECT:		SR-138 PA&ED
DATE:		12/5/2013
PERIOD:		3:30 PM TO 5:30 PM
INTERSECTION:	N/S	MARGALO DR.
	E/W	WEST AVENUE D
CITY:		LANCASTER

VEHICLE COUNTS

15 MIN COUNTS	1	2	3	4	5	6	7	8	9	10	11	12	
PERIOD	SBRT	SBTH	SBLT	WBRT	WBTH	WBLT	NBRT	NBTH	NBLT	EBRT	EBTH	EBLT	TOTAL
330-345	0	0	0	1	28	0	0	0	0	0	36	0	65
345-400	0	0	1	0	29	0	0	0	0	0	32	0	62
400-415	0	0	0	0	22	0	0	0	0	0	34	0	56
415-430	0	0	0	0	16	0	0	0	0	0	36	3	55
430-445	0	0	0	2	16	0	0	0	0	0	36	1	55
445-500	0	0	1	0	18	0	0	0	0	0	34	1	54
500-515	0	0	1	0	20	0	0	0	0	0	31	0	52
515-530	0	0	0	0	22	0	0	0	0	0	29	0	51
HOUR TOTALS													
PERIOD	SBRT	SBTH	SBLT	WBRT	WBTH	WBLT	NBRT	NBTH	NBLT	EBRT	EBTH	EBLT	TOTAL
330-430	0	0	1	1	95	0	0	0	0	0	138	3	238
345-445	0	0	1	2	83	0	0	0	0	0	138	4	228
400-500	0	0	1	2	72	0	0	0	0	0	140	5	220
415-515	0	0	2	2	70	0	0	0	0	0	137	5	216
430-530	0	0	2	2	76	0	0	0	0	0	130	2	212

PEAK HOUR
330-430
PEAK HOUR FACTOR
0.92

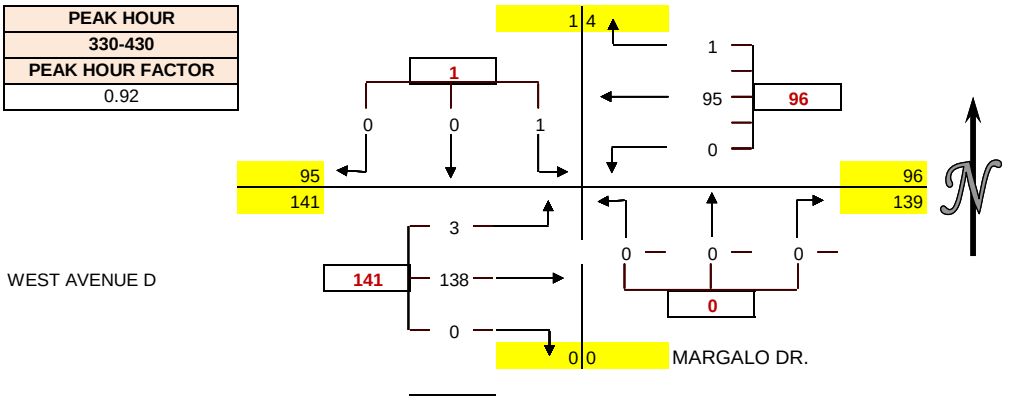

APPROACH SUMMARIES

	NORTH LEG			EAST LEG			SOUTH LEG			WEST LEG	
	APRCH	DEPR		APRCH	DEPR		APRCH	DEPR		APRCH	DEPR
330-430	1	4		96	139		0	0		141	95
345-445	1	6		85	139		0	0		142	83
400-500	1	7		74	141		0	0		145	72
415-515	2	7		72	139		0	0		142	70
430-530	2	4		78	132		0	0		132	76

WILTEC

Phone: (626) 564-1944 Fax: (626) 564-0969 info@wiltecusa.com

INTERSECTION CAR/PED/BIKE TRAFFIC COUNT RESULTS SUMMARY

CLIENT:		KIMLEY-HORN
PROJECT:		SR-138 PA&ED
DATE:		12/5/2013
PERIOD:		3:30 PM TO 5:30 PM
INTERSECTION:	N/S	280TH STREET
	E/W	WEST AVENUE D
CITY:		LANCASTER

VEHICLE COUNTS

15 MIN COUNTS	1	2	3	4	5	6	7	8	9	10	11	12	
PERIOD	SBRT	SBTH	SBLT	WBRT	WBTH	WBLT	NBRT	NBTH	NBLT	EBRT	EBTH	EBLT	TOTAL
330-345	0	0	0	0	30	0	0	0	0	0	36	1	67
345-400	0	0	0	0	29	0	0	0	0	0	34	0	63
400-415	0	0	0	0	20	0	0	0	0	0	33	0	53
415-430	0	0	0	0	15	0	0	0	0	0	39	0	54
430-445	0	0	1	0	16	0	0	0	0	0	36	0	53
445-500	0	0	0	0	17	0	0	0	0	0	36	0	53
500-515	0	0	0	0	20	0	0	0	0	0	31	0	51
515-530	0	0	0	0	21	0	0	0	0	0	29	0	50
HOUR TOTALS													
PERIOD	SBRT	SBTH	SBLT	WBRT	WBTH	WBLT	NBRT	NBTH	NBLT	EBRT	EBTH	EBLT	TOTAL
330-430	0	0	0	0	94	0	0	0	0	0	142	1	237
345-445	0	0	1	0	80	0	0	0	0	0	142	0	223
400-500	0	0	1	0	68	0	0	0	0	0	144	0	213
415-515	0	0	1	0	68	0	0	0	0	0	142	0	211
430-530	0	0	1	0	74	0	0	0	0	0	132	0	207

PEAK HOUR
330-430
PEAK HOUR FACTOR
0.88

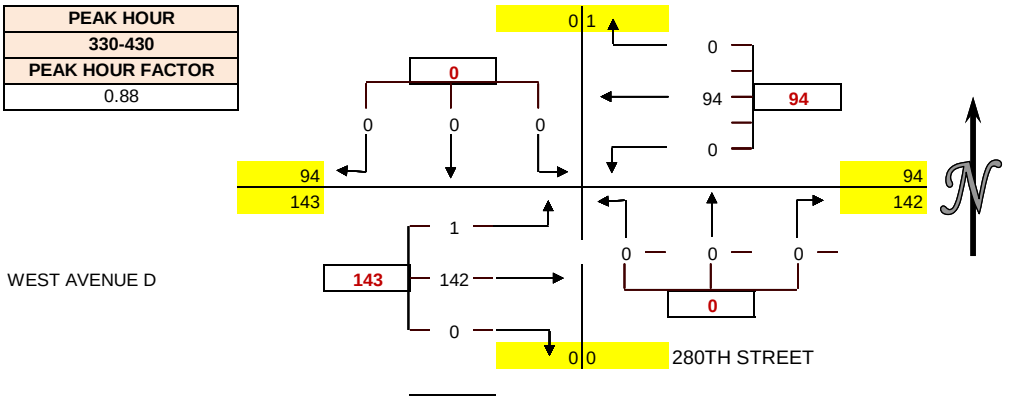

APPROACH SUMMARIES

	NORTH LEG			EAST LEG			SOUTH LEG			WEST LEG	
	APRCH	DEPR		APRCH	DEPR		APRCH	DEPR		APRCH	DEPR
330-430	0	1		94	142		0	0		143	94
345-445	1	0		80	143		0	0		142	80
400-500	1	0		68	145		0	0		144	68
415-515	1	0		68	143		0	0		142	68
430-530	1	0		74	133		0	0		132	74

WILTEC

Phone: (626) 564-1944 Fax: (626) 564-0969 info@wiltecusa.com

INTERSECTION CAR/PED/BIKE TRAFFIC COUNT RESULTS SUMMARY

CLIENT:		KIMLEY-HORN
PROJECT:		SR-138 PA&ED
DATE:		12/6/2013
PERIOD:		3:30 PM TO 5:30 PM
INTERSECTION:	N/S	3 POINTS RD.
	E/W	WEST AVENUE D
CITY:		LANCASTER

VEHICLE COUNTS

15 MIN COUNTS	1	2	3	4	5	6	7	8	9	10	11	12	
PERIOD	SBRT	SBTH	SBLT	WBRT	WBTH	WBLT	NBRT	NBTH	NBLT	EBRT	EBTH	EBLT	TOTAL
330-345	1	1	0	2	24	1	0	0	0	0	41	0	70
345-400	3	0	0	7	23	0	2	0	3	0	37	0	75
400-415	0	0	2	1	24	0	0	1	0	2	34	0	64
415-430	0	0	0	2	21	1	1	0	0	0	33	1	59
430-445	2	1	0	8	17	0	0	0	1	0	37	0	66
445-500	0	0	2	0	19	0	0	0	1	0	29	0	51
500-515	0	0	2	6	22	0	0	0	0	1	35	0	66
515-530	1	0	0	1	15	0	0	0	0	0	24	0	41
HOUR TOTALS													
PERIOD	SBRT	SBTH	SBLT	WBRT	WBTH	WBLT	NBRT	NBTH	NBLT	EBRT	EBTH	EBLT	TOTAL
330-430	4	1	2	12	92	2	3	1	3	2	145	1	268
345-445	5	1	2	18	85	1	3	1	4	2	141	1	264
400-500	2	1	4	11	81	1	1	1	2	2	133	1	240
415-515	2	1	4	16	79	1	1	0	2	1	134	1	242
430-530	3	1	4	15	73	0	0	0	2	1	125	0	224

PEAK HOUR
330-430
PEAK HOUR FACTOR
0.89

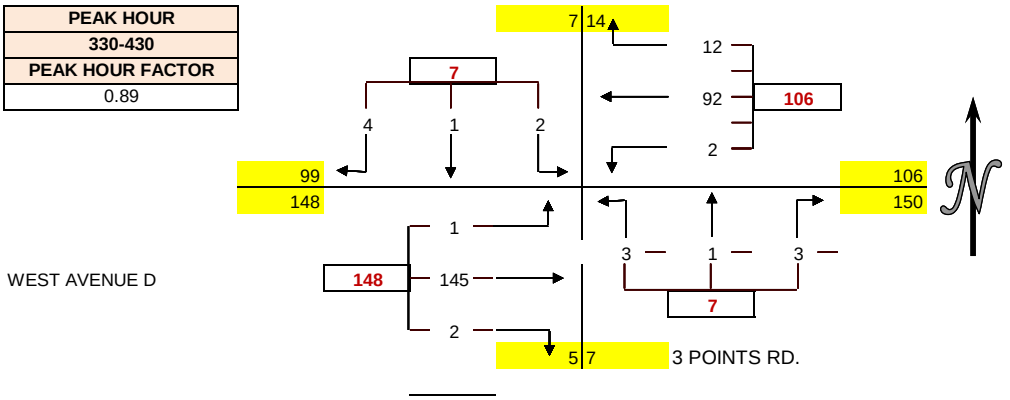

APPROACH SUMMARIES

	NORTH LEG			EAST LEG			SOUTH LEG			WEST LEG	
	APRCH	DEPR		APRCH	DEPR		APRCH	DEPR		APRCH	DEPR
330-430	7	14		106	150		7	5		148	99
345-445	8	20		104	146		8	4		144	94
400-500	7	13		93	138		4	4		136	85
415-515	7	17		96	139		3	3		136	83
430-530	8	15		88	129		2	2		126	78

WILTEC

Phone: (626) 564-1944 Fax: (626) 564-0969 info@wiltecusa.com

INTERSECTION CAR/PED/BIKE TRAFFIC COUNT RESULTS SUMMARY

CLIENT:		KIMLEY-HORN
PROJECT:		SR-138 PA&ED
DATE:		12/6/2013
PERIOD:		3:30 PM TO 5:30 PM
INTERSECTION:	N/S	LA PETITE AVE.
	E/W	WEST AVENUE D
CITY:		LANCASTER

VEHICLE COUNTS

15 MIN COUNTS	1	2	3	4	5	6	7	8	9	10	11	12	
PERIOD	SBRT	SBTH	SBLT	WBRT	WBTH	WBLT	NBRT	NBTH	NBLT	EBRT	EBTH	EBLT	TOTAL
330-345	3	0	3	4	24	0	0	0	0	0	36	1	71
345-400	2	0	0	7	21	0	0	0	0	0	32	5	67
400-415	1	0	0	3	29	0	0	0	0	0	34	5	72
415-430	1	0	2	6	26	0	0	0	0	0	32	4	71
430-445	2	0	2	2	22	0	0	0	0	0	30	2	60
445-500	0	0	0	5	28	0	0	0	0	0	36	3	72
500-515	0	0	1	2	24	0	0	0	0	0	29	3	59
515-530	1	0	3	0	13	0	0	0	0	0	28	6	51
HOUR TOTALS													
PERIOD	SBRT	SBTH	SBLT	WBRT	WBTH	WBLT	NBRT	NBTH	NBLT	EBRT	EBTH	EBLT	TOTAL
330-430	7	0	5	20	100	0	0	0	0	0	134	15	281
345-445	6	0	4	18	98	0	0	0	0	0	128	16	270
400-500	4	0	4	16	105	0	0	0	0	0	132	14	275
415-515	3	0	5	15	100	0	0	0	0	0	127	12	262
430-530	3	0	6	9	87	0	0	0	0	0	123	14	242

PEAK HOUR
330-430
PEAK HOUR FACTOR
0.98

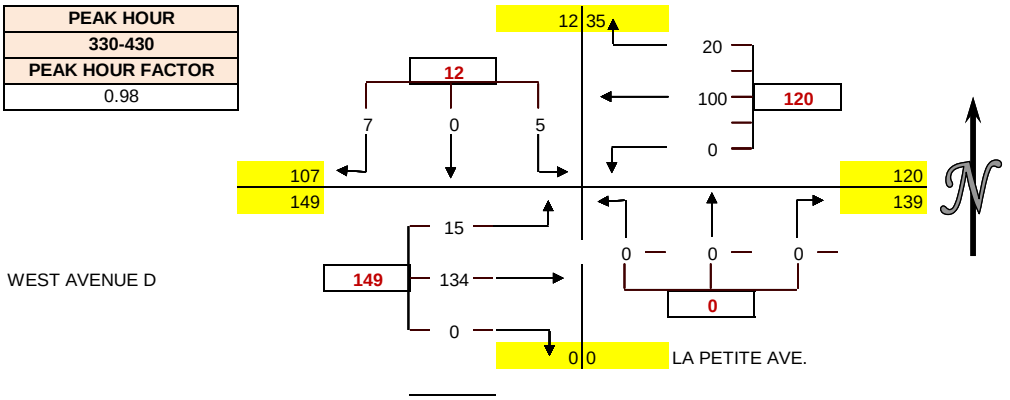

APPROACH SUMMARIES

	NORTH LEG			EAST LEG			SOUTH LEG			WEST LEG	
	APRCH	DEPR		APRCH	DEPR		APRCH	DEPR		APRCH	DEPR
330-430	12	35		120	139		0	0		149	107
345-445	10	34		116	132		0	0		144	104
400-500	8	30		121	136		0	0		146	109
415-515	8	27		115	132		0	0		139	103
430-530	9	23		96	129		0	0		137	90

WILTEC

Phone: (626) 564-1944 Fax: (626) 564-0969 info@wiltecusa.com

INTERSECTION CAR/PED/BIKE TRAFFIC COUNT RESULTS SUMMARY

CLIENT:		KIMLEY-HORN
PROJECT:		SR-138 PA&ED
DATE:		12/10/2013
PERIOD:		3:30 PM TO 5:30 PM
INTERSECTION:	N/S	230TH STREET
	E/W	WEST AVENUE D
CITY:		LANCASTER

VEHICLE COUNTS

15 MIN COUNTS	1	2	3	4	5	6	7	8	9	10	11	12	
PERIOD	SBRT	SBTH	SBLT	WBRT	WBTH	WBLT	NBRT	NBTH	NBLT	EBRT	EBTH	EBLT	TOTAL
330-345	0	0	1	1	31	0	0	0	0	0	33	1	67
345-400	0	0	1	1	25	0	0	0	0	0	31	0	58
400-415	0	0	0	1	26	0	0	0	0	0	34	1	62
415-430	2	0	0	0	32	0	0	0	0	0	33	2	69
430-445	2	0	0	0	24	0	0	0	0	0	30	0	56
445-500	0	0	0	0	22	0	0	0	0	0	24	0	46
500-515	0	0	0	0	22	0	0	0	0	0	22	0	44
515-530	0	0	0	0	18	0	0	0	0	0	24	0	42
HOUR TOTALS													
PERIOD	SBRT	SBTH	SBLT	WBRT	WBTH	WBLT	NBRT	NBTH	NBLT	EBRT	EBTH	EBLT	TOTAL
330-430	2	0	2	3	114	0	0	0	0	0	131	4	256
345-445	4	0	1	2	107	0	0	0	0	0	128	3	245
400-500	4	0	0	1	104	0	0	0	0	0	121	3	233
415-515	4	0	0	0	100	0	0	0	0	0	109	2	215
430-530	2	0	0	0	86	0	0	0	0	0	100	0	188

PEAK HOUR
330-430
PEAK HOUR FACTOR
0.93

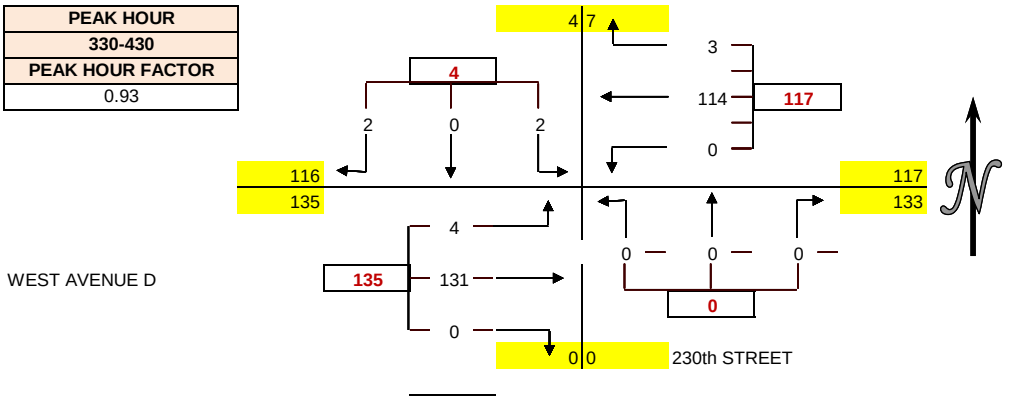

APPROACH SUMMARIES

	NORTH LEG			EAST LEG			SOUTH LEG			WEST LEG	
	APRCH	DEPR		APRCH	DEPR		APRCH	DEPR		APRCH	DEPR
330-430	4	7		117	133		0	0		135	116
345-445	5	5		109	129		0	0		131	111
400-500	4	4		105	121		0	0		124	108
415-515	4	2		100	109		0	0		111	104
430-530	2	0		86	100		0	0		100	88

WILTEC

Phone: (626) 564-1944 Fax: (626) 564-0969 info@wiltecusa.com

INTERSECTION CAR/PED/BIKE TRAFFIC COUNT RESULTS SUMMARY

CLIENT:		KIMLEY-HORN
PROJECT:		SR-138 PA&ED
DATE:		12/10/2013
PERIOD:		3:30 PM TO 5:30 PM
INTERSECTION:	N/S	210TH STREET
	E/W	WEST AVENUE D
CITY:		LANCASTER

VEHICLE COUNTS

15 MIN COUNTS	1	2	3	4	5	6	7	8	9	10	11	12	
PERIOD	SBRT	SBTH	SBLT	WBRT	WBTH	WBLT	NBRT	NBTH	NBLT	EBRT	EBTH	EBLT	TOTAL
330-345	0	0	0	0	31	0	1	0	0	0	33	1	66
345-400	0	0	0	0	25	0	0	0	1	0	31	0	57
400-415	0	0	0	0	26	0	1	0	1	0	34	1	63
415-430	0	0	0	0	32	0	0	0	0	0	33	2	67
430-445	0	0	0	0	24	0	1	0	1	0	30	0	56
445-500	0	0	0	0	22	0	1	0	0	0	24	0	47
500-515	0	0	0	0	22	0	0	0	1	0	22	0	45
515-530	0	0	0	0	18	0	0	0	0	0	24	0	42
HOUR TOTALS													
PERIOD	SBRT	SBTH	SBLT	WBRT	WBTH	WBLT	NBRT	NBTH	NBLT	EBRT	EBTH	EBLT	TOTAL
330-430	0	0	0	0	114	0	2	0	2	0	131	4	253
345-445	0	0	0	0	107	0	2	0	3	0	128	3	243
400-500	0	0	0	0	104	0	3	0	2	0	121	3	233
415-515	0	0	0	0	100	0	2	0	2	0	109	2	215
430-530	0	0	0	0	86	0	2	0	2	0	100	0	190

PEAK HOUR
330-430
PEAK HOUR FACTOR
0.94

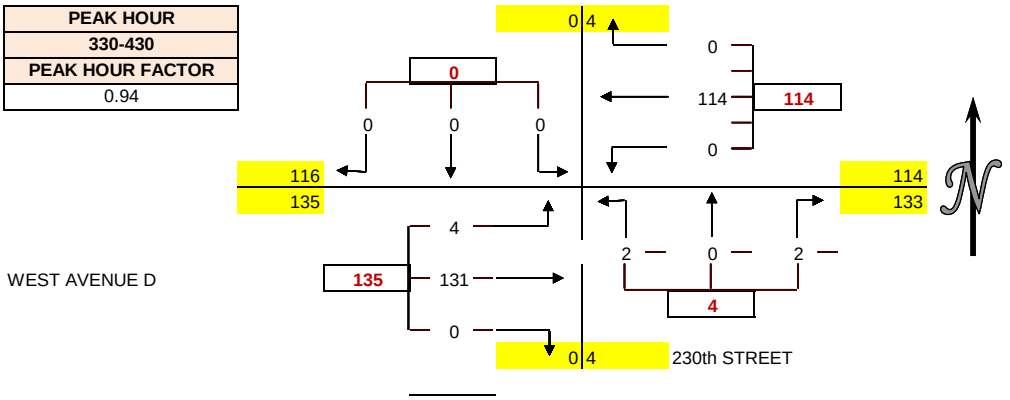

APPROACH SUMMARIES

	NORTH LEG			EAST LEG			SOUTH LEG			WEST LEG	
	APRCH	DEPR		APRCH	DEPR		APRCH	DEPR		APRCH	DEPR
330-430	0	4		114	133		4	0		135	116
345-445	0	3		107	130		5	0		131	110
400-500	0	3		104	124		5	0		124	106
415-515	0	2		100	111		4	0		111	102
430-530	0	0		86	102		4	0		100	88

WILTEC

Phone: (626) 564-1944 Fax: (626) 564-0969 info@wiltecusa.com

INTERSECTION CAR/PED/BIKE TRAFFIC COUNT RESULTS SUMMARY

CLIENT:		KIMLEY-HORN
PROJECT:		SR-138 PA&ED
DATE:		12/12/2013
PERIOD:		3:30 PM TO 5:30 PM
INTERSECTION:	N/S	190TH STREET
	E/W	WEST AVENUE D
CITY:		LANCASTER

VEHICLE COUNTS

15 MIN COUNTS	1	2	3	4	5	6	7	8	9	10	11	12	
PERIOD	SBRT	SBTH	SBLT	WBRT	WBTH	WBLT	NBRT	NBTH	NBLT	EBRT	EBTH	EBLT	TOTAL
330-345	0	0	2	1	42	0	0	0	0	0	37	0	82
345-400	0	0	0	0	19	0	0	0	0	0	40	0	59
400-415	0	0	0	1	14	0	0	0	1	0	30	1	47
415-430	0	0	2	1	28	0	1	0	0	0	35	0	67
430-445	1	0	0	1	23	1	0	0	0	0	22	0	48
445-500	1	0	0	2	18	0	1	0	0	0	34	0	56
500-515	0	0	0	0	22	1	0	0	0	0	31	0	54
515-530	0	0	0	0	28	0	0	0	0	0	24	0	52
HOUR TOTALS	1	2	3	4	5	6	7	8	9	10	11	12	
PERIOD	SBRT	SBTH	SBLT	WBRT	WBTH	WBLT	NBRT	NBTH	NBLT	EBRT	EBTH	EBLT	TOTAL
330-430	0	0	4	3	103	0	1	0	1	0	142	1	255
345-445	1	0	2	3	84	1	1	0	1	0	127	1	221
400-500	2	0	2	5	83	1	2	0	1	0	121	1	218
415-515	2	0	2	4	91	2	2	0	0	0	122	0	225
430-530	2	0	0	3	91	2	1	0	0	0	111	0	210

PEAK HOUR
330-430
PEAK HOUR FACTOR
0.78

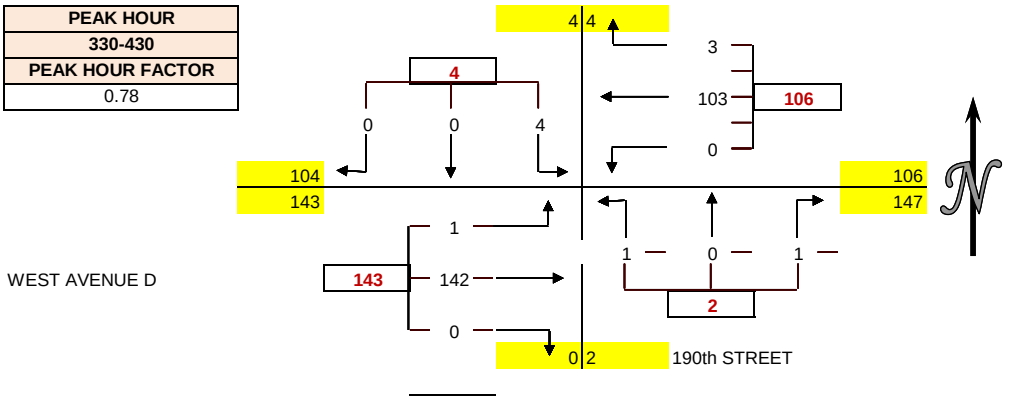

APPROACH SUMMARIES

	NORTH LEG			EAST LEG			SOUTH LEG			WEST LEG	
	APRCH	DEPR		APRCH	DEPR		APRCH	DEPR		APRCH	DEPR
330-430	4	4		106	147		2	0		143	104
345-445	3	4		88	130		2	1		128	86
400-500	4	6		89	125		3	1		122	86
415-515	4	4		97	126		2	2		122	93
430-530	2	3		96	112		1	2		111	93

WILTEC

Phone: (626) 564-1944 Fax: (626) 564-0969 info@wiltecusa.com

INTERSECTION CAR/PED/BIKE TRAFFIC COUNT RESULTS SUMMARY

CLIENT:		KIMLEY-HORN
PROJECT:		SR-138 PA&ED
DATE:		12/12/2013
PERIOD:		3:30 PM TO 5:30 PM
INTERSECTION:	N/S	170TH STREET
	E/W	WEST AVENUE D
CITY:		LANCASTER

VEHICLE COUNTS

15 MIN COUNTS	1	2	3	4	5	6	7	8	9	10	11	12	
PERIOD	SBRT	SBTH	SBLT	WBRT	WBTH	WBLT	NBRT	NBTH	NBLT	EBRT	EBTH	EBLT	TOTAL
330-345	4	4	6	2	23	2	0	0	0	2	36	1	80
345-400	6	1	7	0	18	0	0	0	1	0	36	0	69
400-415	7	3	3	1	21	0	1	0	0	0	37	2	75
415-430	2	1	6	0	19	0	0	0	1	0	28	4	61
430-445	3	2	6	2	15	0	0	0	0	1	28	4	61
445-500	7	3	9	3	20	0	1	0	3	2	30	3	81
500-515	6	3	7	0	17	0	0	1	0	1	33	1	69
515-530	2	0	1	0	15	0	0	0	0	0	32	0	50
HOUR TOTALS	1	2	3	4	5	6	7	8	9	10	11	12	
PERIOD	SBRT	SBTH	SBLT	WBRT	WBTH	WBLT	NBRT	NBTH	NBLT	EBRT	EBTH	EBLT	TOTAL
330-430	19	9	22	3	81	2	1	0	2	2	137	7	285
345-445	18	7	22	3	73	0	1	0	2	1	129	10	266
400-500	19	9	24	6	75	0	2	0	4	3	123	13	278
415-515	18	9	28	5	71	0	1	1	4	4	119	12	272
430-530	18	8	23	5	67	0	1	1	3	4	123	8	261

PEAK HOUR
330-430
PEAK HOUR FACTOR
0.89

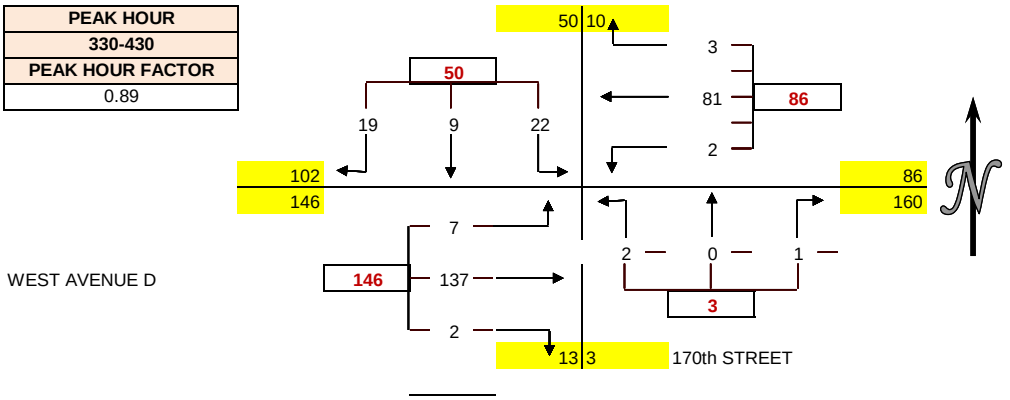

APPROACH SUMMARIES

	NORTH LEG			EAST LEG			SOUTH LEG			WEST LEG	
	APRCH	DEPR		APRCH	DEPR		APRCH	DEPR		APRCH	DEPR
330-430	50	10		86	160		3	13		146	102
345-445	47	13		76	152		3	8		140	93
400-500	52	19		81	149		6	12		139	98
415-515	55	18		76	148		6	13		135	93
430-530	49	14		72	147		5	12		135	88

WILTEC

Phone: (626) 564-1944 Fax: (626) 564-0969 info@wiltecusa.com

INTERSECTION CAR/PED/BIKE TRAFFIC COUNT RESULTS SUMMARY

CLIENT:		KIMLEY-HORN
PROJECT:		SR-138 PA&ED
DATE:		12/12/2013
PERIOD:		3:30 PM TO 5:30 PM
INTERSECTION:	N/S	110 STREET
	E/W	WEST AVENUE D
CITY:		LANCASTER

VEHICLE COUNTS

15 MIN COUNTS	1	2	3	4	5	6	7	8	9	10	11	12	
PERIOD	SBRT	SBTH	SBLT	WBRT	WBTH	WBLT	NBRT	NBTH	NBLT	EBRT	EBTH	EBLT	TOTAL
330-345	0	0	0	0	28	1	0	0	0	0	39	0	68
345-400	0	0	0	0	22	0	0	0	0	0	37	0	59
400-415	0	0	2	1	26	0	0	0	0	0	39	0	68
415-430	0	0	0	0	29	0	0	0	1	0	33	0	63
430-445	0	0	0	0	12	0	0	1	0	0	28	1	42
445-500	0	0	0	0	21	0	0	0	0	0	32	0	53
500-515	0	0	0	1	24	0	0	0	0	0	35	0	60
515-530	0	0	1	0	21	2	0	0	0	0	38	0	62
HOUR TOTALS	1	2	3	4	5	6	7	8	9	10	11	12	
PERIOD	SBRT	SBTH	SBLT	WBRT	WBTH	WBLT	NBRT	NBTH	NBLT	EBRT	EBTH	EBLT	TOTAL
330-430	0	0	2	1	105	1	0	0	1	0	148	0	258
345-445	0	0	2	1	89	0	0	1	1	0	137	1	232
400-500	0	0	2	1	88	0	0	1	1	0	132	1	226
415-515	0	0	0	1	86	0	0	1	1	0	128	1	218
430-530	0	0	1	1	78	2	0	1	0	0	133	1	217

PEAK HOUR
330-430
PEAK HOUR FACTOR
0.95

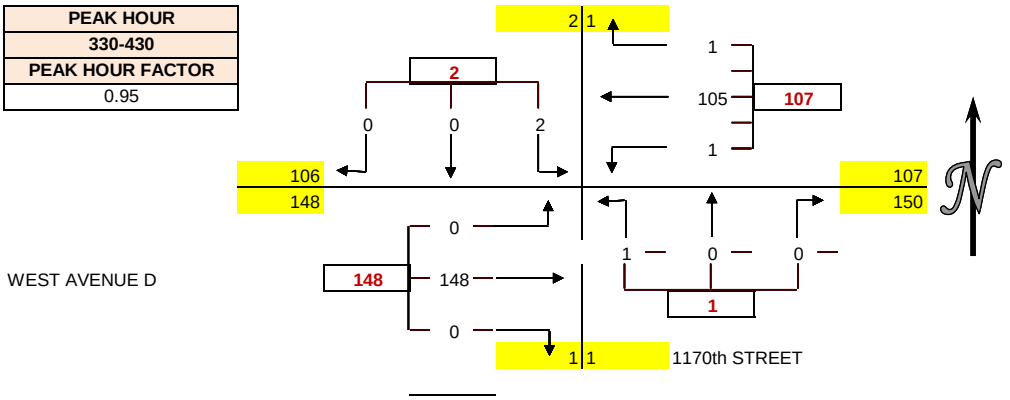

APPROACH SUMMARIES

	NORTH LEG			EAST LEG			SOUTH LEG			WEST LEG	
	APRCH	DEPR		APRCH	DEPR		APRCH	DEPR		APRCH	DEPR
330-430	2	1		107	150		1	1		148	106
345-445	2	3		90	139		2	0		138	90
400-500	2	3		89	134		2	0		133	89
415-515	0	3		87	128		2	0		129	87
430-530	1	3		81	134		1	2		134	78

WILTEC

Phone: (626) 564-1944 Fax: (626) 564-0969 info@wiltecusa.com

INTERSECTION CAR/PED/BIKE TRAFFIC COUNT RESULTS SUMMARY

CLIENT:		AFSHA CONSULTING
PROJECT:		LANCASTER/LEBEC TRAFFIC COUNTS
DATE:		WEDNESDAY DECEMBER 11, 2013
PERIOD:		3:30 PM TO 5:30 PM
INTERSECTION:	N/S	90TH STREET WEST
	E/W	SR-138/ WEST AVENUE D
CITY:		LANCASTER

VEHICLE COUNTS

15 MIN COUNTS	1	2	3	4	5	6	7	8	9	10	11	12	
PERIOD	SBRT	SBTH	SBLT	WBRT	WBTH	WBLT	NBRT	NBTH	NBLT	EBRT	EBTH	EBLT	TOTAL
330-345	0	4	5	5	15	5	2	8	2	1	39	0	86
345-400	0	5	1	7	11	2	4	3	5	0	39	1	78
400-415	0	12	3	4	20	1	0	4	0	0	33	3	80
415-430	0	1	4	5	12	2	0	5	3	1	34	3	70
430-445	1	4	1	6	19	3	2	3	2	1	37	1	80
445-500	0	3	6	4	13	2	2	6	0	2	33	2	73
500-515	0	7	9	3	24	0	1	6	1	2	35	2	90
515-530	0	9	5	6	25	2	4	5	3	1	38	1	99
HOUR TOTALS	1	2	3	4	5	6	7	8	9	10	11	12	
PERIOD	SBRT	SBTH	SBLT	WBRT	WBTH	WBLT	NBRT	NBTH	NBLT	EBRT	EBTH	EBLT	TOTAL
330-430	0	22	13	21	58	10	6	20	10	2	145	7	314
345-445	1	22	9	22	62	8	6	15	10	2	143	8	308
400-500	1	20	14	19	64	8	4	18	5	4	137	9	303
415-515	1	15	20	18	68	7	5	20	6	6	139	8	313
430-530	1	23	21	19	81	7	9	20	6	6	143	6	342

PEAK HOUR
430-530
PEAK HOUR FACTOR
0.86

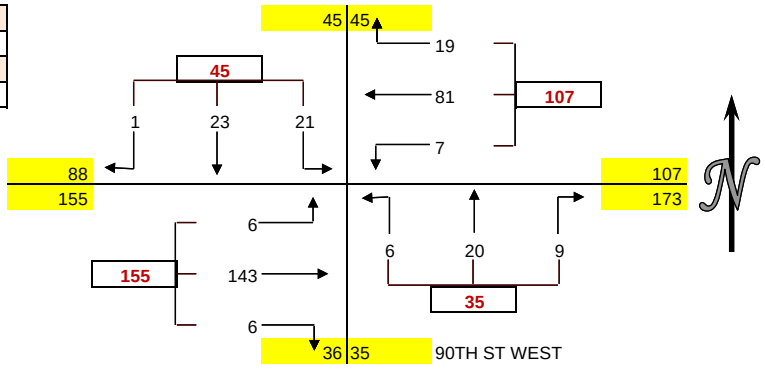

PEDESTRIAN COUNTS

15 MIN COUNTS	NORTH	EAST	SOUTH	WEST	TOTAL
PERIOD	LEG	LEG	LEG	LEG	
330-345	0	0	0	0	0
345-400	0	0	0	0	0
400-415	0	0	0	0	0
415-430	0	0	0	0	0
430-445	0	0	0	0	0
445-500	0	0	0	0	0
500-515	0	0	0	0	0
515-530	0	0	0	0	0
HOUR TOTALS	NORTH	EAST	SOUTH	WEST	TOTAL
PERIOD	LEG	LEG	LEG	LEG	
330-430	0	0	0	0	0
345-445	0	0	0	0	0
400-500	0	0	0	0	0
415-515	0	0	0	0	0
430-530	0	0	0	0	0

BICYCLE COUNTS

15 MIN COUNTS	NORTH	EAST	SOUTH	WEST	TOTAL
PERIOD	LEG	LEG	LEG	LEG	
330-345	0	0	0	0	0
345-400	0	0	0	0	0
400-415	0	0	0	0	0
415-430	0	0	0	0	0
430-445	0	0	0	0	0
445-500	0	0	0	0	0
500-515	0	0	0	0	0
515-530	0	0	0	0	0
HOUR TOTALS	NORTH	EAST	SOUTH	WEST	TOTAL
PERIOD	LEG	LEG	LEG	LEG	
330-430	0	0	0	0	0
345-445	0	0	0	0	0
400-500	0	0	0	0	0
415-515	0	0	0	0	0
430-530	0	0	0	0	0

APPROACH SUMMARIES

	NORTH APRCH			EAST APRCH			SOUTH APRCH			WEST APRCH	
	APRCH	EXIT		APRCH	EXIT		APRCH	EXIT		APRCH	EXIT
330-430	35	48		89	164		36	34		154	68
345-445	32	45		92	158		31	32		153	73
400-500	35	46		91	155		27	32		150	70
415-515	36	46		93	164		31	28		153	75
430-530	45	45		107	173		35	36		155	88

WILTEC

Phone: (626) 564-1944 Fax: (626) 564-0969 info@wiltecusa.com

INTERSECTION CAR/PED/BIKE TRAFFIC COUNT RESULTS SUMMARY

CLIENT:		AFSHA CONSULTING
PROJECT:		LANCASTER/LEBEC TRAFFIC COUNTS
DATE:		WEDNESDAY DECEMBER 11, 2013
PERIOD:		3:30 PM TO 5:30 PM
INTERSECTION:	N/S	85TH STREET WEST
	E/W	SR-138/WEST AVENUE D
CITY:		LANCASTER

VEHICLE COUNTS

15 MIN COUNTS	1	2	3	4	5	6	7	8	9	10	11	12	
PERIOD	SBRT	SBTH	SBLT	WBRT	WBTH	WBLT	NBRT	NBTH	NBLT	EBRT	EBTH	EBLT	TOTAL
330-345	0	0	0	1	26	2	0	0	0	1	39	0	69
345-400	0	0	1	2	20	0	0	0	0	0	54	1	78
400-415	0	1	0	2	23	1	0	0	0	0	34	0	61
415-430	0	0	0	1	16	0	1	0	0	0	36	0	54
430-445	1	0	0	1	27	1	0	0	0	1	36	0	67
445-500	0	0	0	1	22	1	0	0	0	0	41	1	66
500-515	0	0	1	1	24	0	1	0	0	0	43	0	70
515-530	0	0	1	3	33	0	0	0	0	0	49	0	86
HOUR TOTALS	1	2	3	4	5	6	7	8	9	10	11	12	
PERIOD	SBRT	SBTH	SBLT	WBRT	WBTH	WBLT	NBRT	NBTH	NBLT	EBRT	EBTH	EBLT	TOTAL
330-430	0	1	1	6	85	3	1	0	0	1	163	1	262
345-445	1	1	1	6	86	2	1	0	0	1	160	1	260
400-500	1	1	0	5	88	3	1	0	0	1	147	1	248
415-515	1	0	1	4	89	2	2	0	0	1	156	1	257
430-530	1	0	2	6	106	2	1	0	0	1	169	1	289

PEAK HOUR
430-530
PEAK HOUR FACTOR
0.84

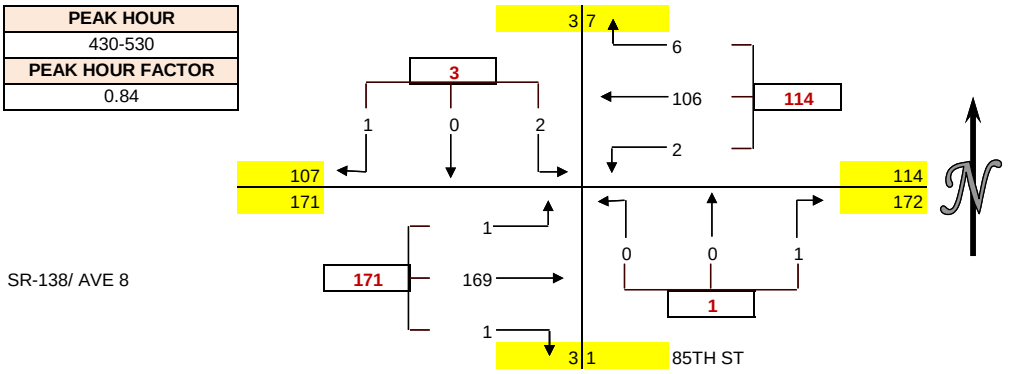

PEDESTRIAN COUNTS

15 MIN COUNTS	NORTH	EAST	SOUTH	WEST	TOTAL
PERIOD	LEG	LEG	LEG	LEG	
330-345	0	0	0	0	0
345-400	0	0	0	0	0
400-415	0	0	0	0	0
415-430	0	0	0	0	0
430-445	0	0	0	0	0
445-500	0	0	0	0	0
500-515	0	0	0	0	0
515-530	0	0	0	0	0
HOUR TOTALS	NORTH	EAST	SOUTH	WEST	TOTAL
PERIOD	LEG	LEG	LEG	LEG	
330-430	0	0	0	0	0
345-445	0	0	0	0	0
400-500	0	0	0	0	0
415-515	0	0	0	0	0
430-530	0	0	0	0	0

BICYCLE COUNTS

15 MIN COUNTS	NORTH	EAST	SOUTH	WEST	TOTAL
PERIOD	LEG	LEG	LEG	LEG	
330-345	0	0	0	0	0
345-400	0	0	0	0	0
400-415	0	0	0	0	0
415-430	0	0	0	0	0
430-445	0	0	0	0	0
445-500	0	0	0	0	0
500-515	0	0	0	0	0
515-530	0	0	0	0	0
HOUR TOTALS	NORTH	EAST	SOUTH	WEST	TOTAL
PERIOD	LEG	LEG	LEG	LEG	
330-430	0	0	0	0	0
345-445	0	0	0	0	0
400-500	0	0	0	0	0
415-515	0	0	0	0	0
430-530	0	0	0	0	0

APPROACH SUMMARIES

	NORTH APRCH			EAST APRCH			SOUTH APRCH			WEST APRCH	
	APRCH	EXIT		APRCH	EXIT		APRCH	EXIT		APRCH	EXIT
330-430	2	7		94	165		1	5		165	85
345-445	3	7		94	162		1	4		162	87
400-500	2	6		96	148		1	5		149	89
415-515	2	5		95	159		2	3		158	90
430-530	3	7		114	172		1	3		171	107

WILTEC

Phone: (626) 564-1944 Fax: (626) 564-0969 info@wiltecusa.com

INTERSECTION CAR/PED/BIKE TRAFFIC COUNT RESULTS SUMMARY

CLIENT:		AFSHA CONSULTING
PROJECT:		LANCASTER/LEBEC TRAFFIC COUNTS
DATE:		WEDNESDAY DECEMBER 11, 2013
PERIOD:		3:30 PM TO 5:30 PM
INTERSECTION:	N/S	80TH STREET WEST
	E/W	SR-138/WEST AVENUE D
CITY:		LANCASTER

VEHICLE COUNTS

15 MIN COUNTS	1	2	3	4	5	6	7	8	9	10	11	12	
PERIOD	SBRT	SBTH	SBLT	WBRT	WBTH	WBLT	NBRT	NBTH	NBLT	EBRT	EBTH	EBLT	TOTAL
330-345	0	0	0	2	31	0	0	1	0	1	44	0	79
345-400	0	1	0	3	20	1	1	0	0	1	49	0	76
400-415	0	0	1	2	31	0	0	1	1	0	35	0	71
415-430	0	0	1	4	20	1	0	0	0	1	40	0	67
430-445	0	1	1	1	33	0	0	1	0	1	38	0	76
445-500	0	1	0	3	23	4	1	1	0	0	43	0	76
500-515	0	0	0	1	32	0	0	0	1	1	42	0	77
515-530	0	0	0	2	27	1	1	1	1	1	42	0	76
HOUR TOTALS	1	2	3	4	5	6	7	8	9	10	11	12	
PERIOD	SBRT	SBTH	SBLT	WBRT	WBTH	WBLT	NBRT	NBTH	NBLT	EBRT	EBTH	EBLT	TOTAL
330-430	0	1	2	11	102	2	1	2	1	3	168	0	293
345-445	0	2	3	10	104	2	1	2	1	3	162	0	290
400-500	0	2	3	10	107	5	1	3	1	2	156	0	290
415-515	0	2	2	9	108	5	1	2	1	3	163	0	296
430-530	0	2	1	7	115	5	2	3	2	3	165	0	305

PEAK HOUR
430-530
PEAK HOUR FACTOR
0.99

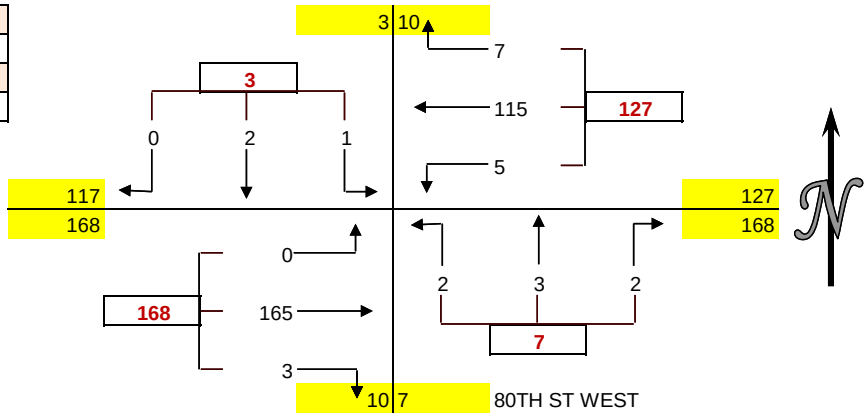

PEDESTRIAN COUNTS

15 MIN COUNTS	NORTH	EAST	SOUTH	WEST	TOTAL
PERIOD	LEG	LEG	LEG	LEG	
330-345	0	0	0	0	0
345-400	0	0	0	0	0
400-415	0	0	0	0	0
415-430	0	0	0	0	0
430-445	0	0	0	0	0
445-500	0	0	0	0	0
500-515	0	0	0	0	0
515-530	0	0	0	0	0
HOUR TOTALS	NORTH	EAST	SOUTH	WEST	TOTAL
PERIOD	LEG	LEG	LEG	LEG	
330-430	0	0	0	0	0
345-445	0	0	0	0	0
400-500	0	0	0	0	0
415-515	0	0	0	0	0
430-530	0	0	0	0	0

BICYCLE COUNTS

15 MIN COUNTS	NORTH	EAST	SOUTH	WEST	TOTAL
PERIOD	LEG	LEG	LEG	LEG	
330-345	0	0	0	0	0
345-400	0	0	0	0	0
400-415	0	0	0	0	0
415-430	0	0	0	0	0
430-445	0	0	0	0	0
445-500	0	0	0	0	0
500-515	0	0	0	0	0
515-530	0	0	0	0	0
HOUR TOTALS	NORTH	EAST	SOUTH	WEST	TOTAL
PERIOD	LEG	LEG	LEG	LEG	
330-430	0	0	0	0	0
345-445	0	0	0	0	0
400-500	0	0	0	0	0
415-515	0	0	0	0	0
430-530	0	0	0	0	0

APPROACH SUMMARIES											
	NORTH APRCH			EAST APRCH			SOUTH APRCH			WEST APRCH	
	APRCH	EXIT		APRCH	EXIT		APRCH	EXIT		APRCH	EXIT
330-430	3	13		115	171		4	6		171	103
345-445	5	12		116	166		4	7		165	105
400-500	5	13		122	160		5	9		158	108
415-515	4	11		122	166		4	10		166	109
430-530	3	10		127	168		7	10		168	117

WILTEC

Phone: (626) 564-1944 Fax: (626) 564-0969 info@wiltecusa.com

INTERSECTION CAR/PED/BIKE TRAFFIC COUNT RESULTS SUMMARY

CLIENT:		AFSHA CONSULTING
PROJECT:		LANCASTER/LEBEC TRAFFIC COUNTS
DATE:		TUESDAY DECEMBER 10, 2013
PERIOD:		3:30 PM TO 5:30 PM
INTERSECTION:	N/S	70TH STREET WEST
	E/W	SR-138/WEST AVENUE D
CITY:		LANCASTER

VEHICLE COUNTS

15 MIN COUNTS	1	2	3	4	5	6	7	8	9	10	11	12	
PERIOD	SBRT	SBTH	SBLT	WBRT	WBTH	WBLT	NBRT	NBTH	NBLT	EBRT	EBTH	EBLT	TOTAL
330-345	0	1	0	0	31	0	0	2	0	1	43	0	78
345-400	0	0	0	2	29	0	0	1	2	0	58	0	92
400-415	0	1	3	4	33	0	1	2	0	1	45	2	92
415-430	0	2	1	4	31	0	0	4	1	1	32	0	76
430-445	0	2	2	4	39	0	0	2	0	0	45	0	94
445-500	1	2	1	1	28	0	0	2	0	0	53	0	88
500-515	0	2	0	0	30	0	0	0	0	0	41	0	73
515-530	0	0	1	4	34	0	0	2	2	1	44	0	88
HOUR TOTALS	1	2	3	4	5	6	7	8	9	10	11	12	
PERIOD	SBRT	SBTH	SBLT	WBRT	WBTH	WBLT	NBRT	NBTH	NBLT	EBRT	EBTH	EBLT	TOTAL
330-430	0	4	4	10	124	0	1	9	3	3	178	2	338
345-445	0	5	6	14	132	0	1	9	3	2	180	2	354
400-500	1	7	7	13	131	0	1	10	1	2	175	2	350
415-515	1	8	4	9	128	0	0	8	1	1	171	0	331
430-530	1	6	4	9	131	0	0	6	2	1	183	0	343

PEAK HOUR
345-445
PEAK HOUR FACTOR
0.94

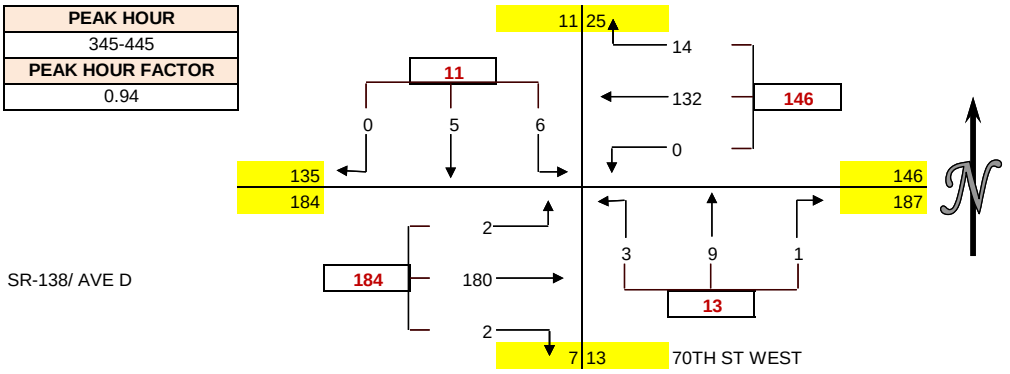

PEDESTRIAN COUNTS

15 MIN COUNTS	NORTH	EAST	SOUTH	WEST	TOTAL
PERIOD	LEG	LEG	LEG	LEG	
330-345	0	0	0	0	0
345-400	0	0	0	0	0
400-415	0	0	0	0	0
415-430	0	0	0	0	0
430-445	0	0	0	0	0
445-500	0	0	0	0	0
500-515	0	0	0	0	0
515-530	0	0	0	0	0
HOUR TOTALS	NORTH	EAST	SOUTH	WEST	TOTAL
PERIOD	LEG	LEG	LEG	LEG	
330-430	0	0	0	0	0
345-445	0	0	0	0	0
400-500	0	0	0	0	0
415-515	0	0	0	0	0
430-530	0	0	0	0	0

BICYCLE COUNTS

15 MIN COUNTS	NORTH	EAST	SOUTH	WEST	TOTAL
PERIOD	LEG	LEG	LEG	LEG	
330-345	0	0	0	0	0
345-400	0	0	0	0	0
400-415	0	0	0	0	0
415-430	0	0	0	0	0
430-445	0	0	0	0	0
445-500	0	0	0	0	0
500-515	0	0	0	0	0
515-530	0	0	0	0	0
HOUR TOTALS	NORTH	EAST	SOUTH	WEST	TOTAL
PERIOD	LEG	LEG	LEG	LEG	
330-430	0	0	0	0	0
345-445	0	0	0	0	0
400-500	0	0	0	0	0
415-515	0	0	0	0	0
430-530	0	0	0	0	0

APPROACH SUMMARIES

	NORTH APRCH			EAST APRCH			SOUTH APRCH			WEST APRCH	
	APRCH	EXIT		APRCH	EXIT		APRCH	EXIT		APRCH	EXIT
330-430	8	21		134	183		13	7		183	127
345-445	11	25		146	187		13	7		184	135
400-500	15	25		144	183		12	9		179	133
415-515	13	17		137	175		9	9		172	130
430-530	11	15		140	187		8	7		184	134

WILTEC

Phone: (626) 564-1944 Fax: (626) 564-0969 info@wiltecusa.com

INTERSECTION CAR/PED/BIKE TRAFFIC COUNT RESULTS SUMMARY

CLIENT:		AFSHA CONSULTING
PROJECT:		LANCASTER/LEBEC TRAFFIC COUNTS
DATE:		WEDNESDAY DECEMBER 11, 2013
PERIOD:		3:30 PM TO 5:30 PM
INTERSECTION:	N/S	60TH STREET WEST
	E/W	SR-138/WEST AVENUE D
CITY:		LANCASTER

VEHICLE COUNTS

15 MIN COUNTS	1	2	3	4	5	6	7	8	9	10	11	12	
PERIOD	SBRT	SBTH	SBLT	WBRT	WBTH	WBLT	NBRT	NBTH	NBLT	EBRT	EBTH	EBLT	TOTAL
330-345	0	11	0	1	15	1	1	17	4	1	46	2	99
345-400	2	4	0	1	33	1	0	8	5	5	33	0	92
400-415	0	6	2	2	31	2	0	12	5	6	41	2	109
415-430	2	5	1	0	30	0	0	6	3	8	38	0	93
430-445	0	8	0	3	38	2	1	10	1	7	33	1	104
445-500	0	14	1	1	28	0	1	12	5	4	45	0	111
500-515	0	7	0	0	29	1	0	13	5	6	39	0	100
515-530	1	6	1	0	23	2	0	11	4	4	41	0	93
HOUR TOTALS	1	2	3	4	5	6	7	8	9	10	11	12	
PERIOD	SBRT	SBTH	SBLT	WBRT	WBTH	WBLT	NBRT	NBTH	NBLT	EBRT	EBTH	EBLT	TOTAL
330-430	4	26	3	4	109	4	1	43	17	20	158	4	393
345-445	4	23	3	6	132	5	1	36	14	26	145	3	398
400-500	2	33	4	6	127	4	2	40	14	25	157	3	417
415-515	2	34	2	4	125	3	2	41	14	25	155	1	408
430-530	1	35	2	4	118	5	2	46	15	21	158	1	408

PEAK HOUR
400-500
PEAK HOUR FACTOR
0.94

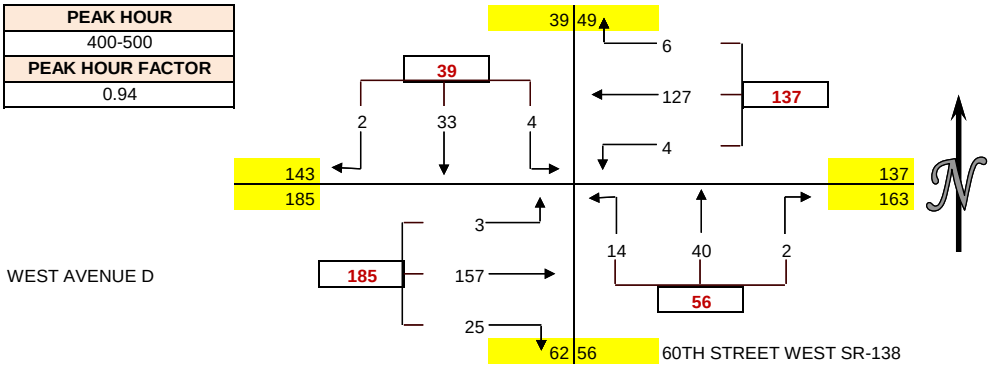

PEDESTRIAN COUNTS

15 MIN COUNTS	NORTH	EAST	SOUTH	WEST	TOTAL
PERIOD	LEG	LEG	LEG	LEG	
330-345	0	0	0	0	0
345-400	0	0	0	0	0
400-415	0	0	0	0	0
415-430	0	0	0	0	0
430-445	0	0	0	0	0
445-500	0	0	0	0	0
500-515	0	0	0	0	0
515-530	0	0	0	0	0
HOUR TOTALS	NORTH	EAST	SOUTH	WEST	TOTAL
PERIOD	LEG	LEG	LEG	LEG	
330-430	0	0	0	0	0
345-445	0	0	0	0	0
400-500	0	0	0	0	0
415-515	0	0	0	0	0
430-530	0	0	0	0	0

BICYCLE COUNTS

15 MIN COUNTS	NORTH	EAST	SOUTH	WEST	TOTAL
PERIOD	LEG	LEG	LEG	LEG	
330-345	0	0	0	0	0
345-400	0	0	0	0	0
400-415	0	0	0	0	0
415-430	0	0	0	0	0
430-445	0	0	0	0	0
445-500	0	0	0	0	0
500-515	0	0	0	0	0
515-530	0	0	0	0	0
HOUR TOTALS	NORTH	EAST	SOUTH	WEST	TOTAL
PERIOD	LEG	LEG	LEG	LEG	
330-430	0	0	0	0	0
345-445	0	0	0	0	0
400-500	0	0	0	0	0
415-515	0	0	0	0	0
430-530	0	0	0	0	0

APPROACH SUMMARIES

	NORTH APRCH			EAST APRCH			SOUTH APRCH			WEST APRCH	
	APRCH	EXIT		APRCH	EXIT		APRCH	EXIT		APRCH	EXIT
330-430	33	51		117	162		61	50		182	130
345-445	30	45		143	149		51	54		174	150
400-500	39	49		137	163		56	62		185	143
415-515	38	46		132	159		57	62		181	141
430-530	38	51		127	162		63	61		180	134

WILTEC

Phone: (626) 564-1944 Fax: (626) 564-0969 info@wiltecusa.com

INTERSECTION CAR/PED/BIKE TRAFFIC COUNT RESULTS SUMMARY

CLIENT:		AFSHA CONSULTING
PROJECT:		LANCASTER/LEBEC TRAFFIC COUNTS
DATE:		WEDNESDAY DECEMBER 11, 2013
PERIOD:		3:30 PM TO 5:30 PM
INTERSECTION:	N/S	30TH STREET WEST
	E/W	SR-138/WEST AVENUE D
CITY:		LANCASTER

VEHICLE COUNTS

15 MIN COUNTS	1	2	3	4	5	6	7	8	9	10	11	12	
PERIOD	SBRT	SBTH	SBLT	WBRT	WBTH	WBLT	NBRT	NBTH	NBLT	EBRT	EBTH	EBLT	TOTAL
330-345	0	0	1	0	23	1	1	0	1	1	49	0	77
345-400	0	1	0	0	32	1	0	0	1	0	31	0	66
400-415	0	0	0	0	33	2	1	0	1	0	41	0	78
415-430	0	0	0	0	30	0	1	0	1	2	39	0	73
430-445	0	0	0	0	39	0	0	0	2	0	33	0	74
445-500	0	1	1	1	27	2	0	0	1	2	47	0	82
500-515	0	0	0	0	27	0	0	0	1	0	35	0	63
515-530	0	0	2	0	31	0	1	0	0	0	45	0	79
HOUR TOTALS	1	2	3	4	5	6	7	8	9	10	11	12	
PERIOD	SBRT	SBTH	SBLT	WBRT	WBTH	WBLT	NBRT	NBTH	NBLT	EBRT	EBTH	EBLT	TOTAL
330-430	0	1	1	0	118	4	3	0	4	3	160	0	294
345-445	0	1	0	0	134	3	2	0	5	2	144	0	291
400-500	0	1	1	1	129	4	2	0	5	4	160	0	307
415-515	0	1	1	1	123	2	1	0	5	4	154	0	292
430-530	0	1	3	1	124	2	1	0	4	2	160	0	298

PEAK HOUR
400-500
PEAK HOUR FACTOR
0.94

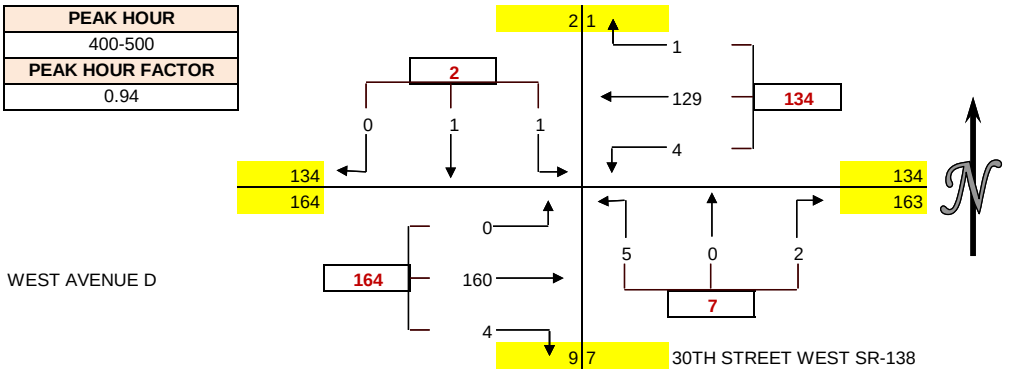

PEDESTRIAN COUNTS

15 MIN COUNTS	NORTH	EAST	SOUTH	WEST	TOTAL
PERIOD	LEG	LEG	LEG	LEG	
330-345	0	0	0	0	0
345-400	0	0	0	0	0
400-415	0	0	0	0	0
415-430	0	0	0	0	0
430-445	0	0	0	0	0
445-500	0	0	0	0	0
500-515	0	0	0	0	0
515-530	0	0	0	0	0
HOUR TOTALS	NORTH	EAST	SOUTH	WEST	TOTAL
PERIOD	LEG	LEG	LEG	LEG	
330-430	0	0	0	0	0
345-445	0	0	0	0	0
400-500	0	0	0	0	0
415-515	0	0	0	0	0
430-530	0	0	0	0	0

BICYCLE COUNTS

15 MIN COUNTS	NORTH	EAST	SOUTH	WEST	TOTAL
PERIOD	LEG	LEG	LEG	LEG	
330-345	0	0	0	0	0
345-400	0	0	0	0	0
400-415	0	0	0	0	0
415-430	0	0	0	0	0
430-445	0	0	0	0	0
445-500	0	0	0	0	0
500-515	0	0	0	0	0
515-530	0	0	0	0	0
HOUR TOTALS	NORTH	EAST	SOUTH	WEST	TOTAL
PERIOD	LEG	LEG	LEG	LEG	
330-430	0	0	0	0	0
345-445	0	0	0	0	0
400-500	0	0	0	0	0
415-515	0	0	0	0	0
430-530	0	0	0	0	0

APPROACH SUMMARIES

	NORTH APRCH			EAST APRCH			SOUTH APRCH			WEST APRCH	
	APRCH	EXIT		APRCH	EXIT		APRCH	EXIT		APRCH	EXIT
330-430	2	0		122	164		7	8		163	122
345-445	1	0		137	146		7	6		146	139
400-500	2	1		134	163		7	9		164	134
415-515	2	1		126	156		6	7		158	128
430-530	4	1		127	164		5	5		162	128

WILTEC

Phone: (626) 564-1944 Fax: (626) 564-0969 info@wiltecusa.com

INTERSECTION CAR/PED/BIKE TRAFFIC COUNT RESULTS SUMMARY

CLIENT:		AFSHA CONSULTING
PROJECT:		LANCASTER/LEBEC TRAFFIC COUNTS
DATE:		WEDNESDAY DECEMBER 11, 2013
PERIOD:		3:30 PM TO 5:30 PM
INTERSECTION:	N/S	SR-14 SOUTHBOUND RAMPS
	E/W	SR-138/WEST AVENUE D
CITY:		LANCASTER

VEHICLE COUNTS

15 MIN COUNTS	1	2	3	4	5	6	7	8	9	10	11	12	
PERIOD	SBRT	SBTH	SBLT	WBRT	WBTH	WBLT	NBRT	NBTH	NBLT	EBRT	EBTH	EBLT	TOTAL
330-345	3	1	7	0	20	7	0	0	0	36	12	0	86
345-400	8	1	5	0	33	2	0	0	0	35	11	0	95
400-415	6	0	4	0	28	0	0	0	0	22	13	0	73
415-430	4	0	4	0	23	1	0	0	0	28	12	0	72
430-445	4	0	3	0	35	0	0	0	0	28	13	0	83
445-500	8	0	6	0	27	4	0	0	0	31	12	0	88
500-515	6	0	2	0	20	2	0	0	0	30	10	0	70
515-530	7	1	4	0	23	2	0	0	0	29	16	0	82
HOUR TOTALS	1	2	3	4	5	6	7	8	9	10	11	12	
PERIOD	SBRT	SBTH	SBLT	WBRT	WBTH	WBLT	NBRT	NBTH	NBLT	EBRT	EBTH	EBLT	TOTAL
330-430	21	2	20	0	104	10	0	0	0	121	48	0	326
345-445	22	1	16	0	119	3	0	0	0	113	49	0	323
400-500	22	0	17	0	113	5	0	0	0	109	50	0	316
415-515	22	0	15	0	105	7	0	0	0	117	47	0	313
430-530	25	1	15	0	105	8	0	0	0	118	51	0	323

PEAK HOUR
330-430
PEAK HOUR FACTOR
0.86

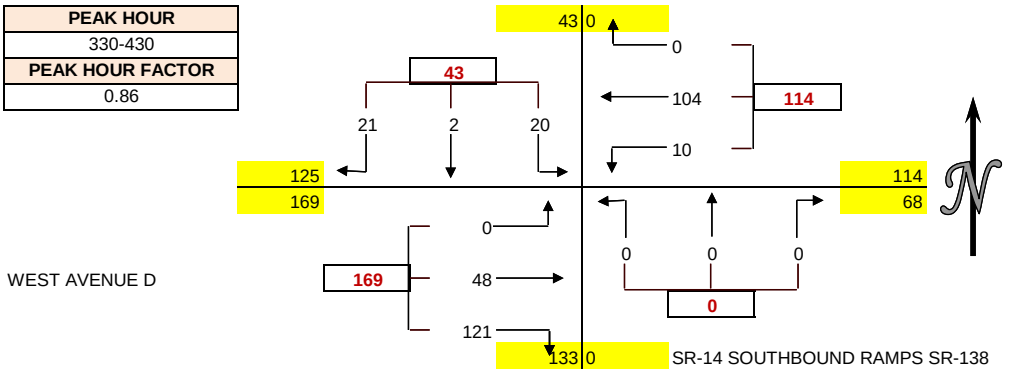

PEDESTRIAN COUNTS

15 MIN COUNTS	NORTH	EAST	SOUTH	WEST	TOTAL
PERIOD	LEG	LEG	LEG	LEG	
330-345	0	0	0	0	0
345-400	0	0	0	0	0
400-415	0	0	0	0	0
415-430	0	0	0	0	0
430-445	0	0	0	0	0
445-500	0	0	0	0	0
500-515	0	0	0	0	0
515-530	0	0	0	0	0
HOUR TOTALS	NORTH	EAST	SOUTH	WEST	TOTAL
PERIOD	LEG	LEG	LEG	LEG	
330-430	0	0	0	0	0
345-445	0	0	0	0	0
400-500	0	0	0	0	0
415-515	0	0	0	0	0
430-530	0	0	0	0	0

BICYCLE COUNTS

15 MIN COUNTS	NORTH	EAST	SOUTH	WEST	TOTAL
PERIOD	LEG	LEG	LEG	LEG	
330-345	0	0	0	0	0
345-400	0	0	0	0	0
400-415	0	0	0	0	0
415-430	0	0	0	0	0
430-445	0	0	0	0	0
445-500	0	0	0	0	0
500-515	0	0	0	0	0
515-530	0	0	0	0	0
HOUR TOTALS	NORTH	EAST	SOUTH	WEST	TOTAL
PERIOD	LEG	LEG	LEG	LEG	
330-430	0	0	0	0	0
345-445	0	0	0	0	0
400-500	0	0	0	0	0
415-515	0	0	0	0	0
430-530	0	0	0	0	0

APPROACH SUMMARIES

	NORTH APRCH			EAST APRCH			SOUTH APRCH			WEST APRCH	
	APRCH	EXIT		APRCH	EXIT		APRCH	EXIT		APRCH	EXIT
330-430	43	0		114	68		0	133		169	125
345-445	39	0		122	65		0	117		162	141
400-500	39	0		118	67		0	114		159	135
415-515	37	0		112	62		0	124		164	127
430-530	41	0		113	66		0	127		169	130

WILTEC

Phone: (626) 564-1944 Fax: (626) 564-0969 info@wiltecusa.com

INTERSECTION CAR/PED/BIKE TRAFFIC COUNT RESULTS SUMMARY

CLIENT:		AFSHA CONSULTING
PROJECT:		LANCASTER/LEBEC TRAFFIC COUNTS
DATE:		WEDNESDAY DECEMBER 11, 2013
PERIOD:		3:30 PM TO 5:30 PM
INTERSECTION:	N/S	SR-14 NORTHBOUND RAMPS
	E/W	SR-138/WEST AVENUE D
CITY:		LANCASTER

VEHICLE COUNTS

15 MIN COUNTS	1	2	3	4	5	6	7	8	9	10	11	12	
PERIOD	SBRT	SBTH	SBLT	WBRT	WBTH	WBLT	NBRT	NBTH	NBLT	EBRT	EBTH	EBLT	TOTAL
330-345	0	0	0	9	12	0	3	0	17	5	15	0	61
345-400	0	0	0	10	5	0	1	0	29	4	10	0	59
400-415	0	0	0	1	4	0	0	0	27	5	16	0	53
415-430	0	0	0	7	4	0	2	0	21	2	12	0	48
430-445	0	0	0	2	5	0	0	1	29	2	11	0	50
445-500	0	0	0	7	11	0	1	0	17	7	12	0	55
500-515	0	0	0	10	5	0	1	0	17	5	9	0	47
515-530	0	0	0	4	6	0	0	0	20	6	12	0	48
HOUR TOTALS	1	2	3	4	5	6	7	8	9	10	11	12	
PERIOD	SBRT	SBTH	SBLT	WBRT	WBTH	WBLT	NBRT	NBTH	NBLT	EBRT	EBTH	EBLT	TOTAL
330-430	0	0	0	27	25	0	6	0	94	16	53	0	221
345-445	0	0	0	20	18	0	3	1	106	13	49	0	210
400-500	0	0	0	17	24	0	3	1	94	16	51	0	206
415-515	0	0	0	26	25	0	4	1	84	16	44	0	200
430-530	0	0	0	23	27	0	2	1	83	20	44	0	200

PEAK HOUR
330-430
PEAK HOUR FACTOR
0.91

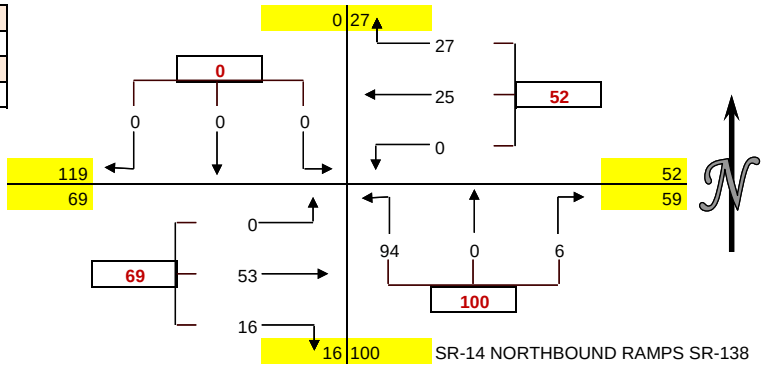

PEDESTRIAN COUNTS

15 MIN COUNTS	NORTH	EAST	SOUTH	WEST	TOTAL
PERIOD	LEG	LEG	LEG	LEG	
330-345	0	0	0	0	0
345-400	0	0	0	0	0
400-415	0	0	0	0	0
415-430	0	0	0	0	0
430-445	0	0	0	0	0
445-500	0	0	0	0	0
500-515	0	0	0	0	0
515-530	0	0	0	0	0
HOUR TOTALS	NORTH	EAST	SOUTH	WEST	TOTAL
PERIOD	LEG	LEG	LEG	LEG	
330-430	0	0	0	0	0
345-445	0	0	0	0	0
400-500	0	0	0	0	0
415-515	0	0	0	0	0
430-530	0	0	0	0	0

BICYCLE COUNTS

15 MIN COUNTS	NORTH	EAST	SOUTH	WEST	TOTAL
PERIOD	LEG	LEG	LEG	LEG	
330-345	0	0	0	0	0
345-400	0	0	0	0	0
400-415	0	0	0	0	0
415-430	0	0	0	0	0
430-445	0	0	0	0	0
445-500	0	0	0	0	0
500-515	0	0	0	0	0
515-530	0	0	0	0	0
HOUR TOTALS	NORTH	EAST	SOUTH	WEST	TOTAL
PERIOD	LEG	LEG	LEG	LEG	
330-430	0	0	0	0	0
345-445	0	0	0	0	0
400-500	0	0	0	0	0
415-515	0	0	0	0	0
430-530	0	0	0	0	0

APPROACH SUMMARIES

	NORTH APRCH			EAST APRCH			SOUTH APRCH			WEST APRCH	
	APRCH	EXIT		APRCH	EXIT		APRCH	EXIT		APRCH	EXIT
330-430	0	27		52	59		100	16		69	119
345-445	0	21		38	52		110	13		62	124
400-500	0	18		41	54		98	16		67	118
415-515	0	27		51	48		89	16		60	109
430-530	0	24		50	46		86	20		64	110

WILTEC

Phone: (626) 564-1944 Fax: (626) 564-0969

24-HOUR ADT COUNT SUMMARY

CLIENT: AFSHA CONSULTING
PROJECT: LANCASTER/LEBEC TRAFFIC COUNTS
LOCATION: CONNECTOR FROM I-5 NB TO STATE ROUTE 138
DATE: WEDNESDAY DECEMBER 11, 2013

DIRECTION:		CONNECTOR			
TIME	00-15	15-30	30-45	45-60	HOUR TOTALS
0:00	1	1	0	0	2
1:00	2	0	2	3	7
2:00	0	0	1	0	1
3:00	0	1	3	1	5
4:00	3	2	2	3	10
5:00	4	11	18	14	47
6:00	9	9	9	5	32
7:00	5	12	10	5	32
8:00	4	8	5	8	25
9:00	5	9	3	8	25
10:00	6	5	5	6	22
11:00	4	3	7	4	18
12:00	4	3	4	10	21
13:00	9	10	11	5	35
14:00	6	5	9	7	27
15:00	2	7	12	5	26
16:00	16	9	5	14	44
17:00	5	7	9	12	33
18:00	10	9	9	6	34
19:00	7	6	2	3	18
20:00	7	3	7	5	22
21:00	2	2	2	7	13
22:00	5	4	1	1	11
23:00	2	0	0	1	3
				TOTAL	513
AM PEAK HOUR		0515-0615			
VOLUME		52			
PM PEAK HOUR		1600-1700			
VOLUME		44			

DIRECTION:					
TIME	00-15	15-30	30-45	45-60	HOUR TOTALS
0:00	0	0	0	0	0
1:00	0	0	0	0	0
2:00	0	0	0	0	0
3:00	0	0	0	0	0
4:00	0	0	0	0	0
5:00	0	0	0	0	0
6:00	0	0	0	0	0
7:00	0	0	0	0	0
8:00	0	0	0	0	0
9:00	0	0	0	0	0
10:00	0	0	0	0	0
11:00	0	0	0	0	0
12:00	0	0	0	0	0
13:00	0	0	0	0	0
14:00	0	0	0	0	0
15:00	0	0	0	0	0
16:00	0	0	0	0	0
17:00	0	0	0	0	0
18:00	0	0	0	0	0
19:00	0	0	0	0	0
20:00	0	0	0	0	0
21:00	0	0	0	0	0
22:00	0	0	0	0	0
23:00	0	0	0	0	0
				TOTAL	0
AM PEAK HOUR		0000-0100			
VOLUME		0			
PM PEAK HOUR		1200-1300			
VOLUME		0			

TOTAL BI-DIRECTIONAL VOLUME	513

WILTEC

Phone: (626) 564-1944 Fax: (626) 564-0969 wiltecusa.com

ALXE CLASSIFICATION SURVEYS

CLIENT: AFSHA CONSULTING
PROJECT: LANCASTER/LEBEC TRAFFIC COUNTS
DATE: WEDNESDAY DECEMBER 11, 2013
LOCATION: CONNECTOR FROM I- 5 NB TO STATE ROUTE 138
DIRECTION: CONNECTOR ROAD

BEGIN TIME	TOTAL	1 BIKES	2 CARS & TLRS	3 2 AXLE LONG	4 BUSES	5 2 AXLE 6 TIRE	6 3 AXLE SINGLE	7 4 AXLE SINGLE	8 <5AXLE DOUBLE	9 5 AXLE DOUBLE	10 >6AXLE DOUBLE	11 <6AXLE MULTI	12 6 AXLE MULTI	13 >6AXLE MULTI
0:00	2	0	1	0	0	0	0	0	0	0	0	1	0	0
1:00	7	0	2	0	0	0	0	0	0	2	0	3	0	0
2:00	1	0	0	0	0	0	0	0	0	0	0	1	0	0
3:00	5	0	0	0	0	0	0	0	0	1	0	4	0	0
4:00	10	0	1	1	0	3	0	0	0	0	0	5	0	0
5:00	47	0	18	12	0	10	0	0	0	4	0	3	0	0
6:00	32	0	9	8	1	5	0	0	0	4	0	5	0	0
7:00	32	0	12	7	0	5	0	0	1	3	0	4	0	0
8:00	25	0	7	5	1	3	1	0	0	3	0	5	0	0
9:00	25	0	5	8	0	1	0	0	0	5	0	6	0	0
10:00	22	1	6	3	2	1	1	0	0	2	0	6	0	0
11:00	18	0	7	4	0	1	0	0	1	0	0	5	0	0
12:00	21	0	5	4	0	6	0	0	0	3	0	2	0	0
13:00	35	0	11	7	1	4	0	0	1	8	0	2	0	1
14:00	27	0	14	6	2	1	0	0	1	0	0	3	0	1
15:00	26	0	11	8	0	3	1	0	1	1	0	1	0	0
16:00	44	0	18	13	0	7	0	0	0	2	0	4	0	0
17:00	33	0	15	8	1	3	0	0	1	2	0	3	0	0
18:00	34	0	21	8	0	1	0	0	0	1	0	3	0	0
19:00	18	0	11	3	0	1	0	0	0	1	0	2	0	0
20:00	22	0	10	6	0	1	1	0	0	1	0	3	0	0
21:00	13	0	7	2	0	1	0	0	0	1	0	2	0	0
22:00	11	0	7	3	0	0	0	0	0	0	0	1	0	0
23:00	3	0	1	0	0	1	0	0	0	0	0	1	0	0
DAILY TOTALS:	**513**	**1**	**199**	**116**	**8**	**58**	**4**	**0**	**6**	**44**	**0**	**75**	**0**	**2**
PERCENT TOTALS:		**0.2**	**38.8**	**22.6**	**1.6**	**11.3**	**0.8**	**0**	**1.2**	**8.6**	**0**	**14.6**	**0**	**0.4**

WILTEC

Phone: (626) 564-1944 Fax: (626) 564-0969

24-HOUR ADT COUNT SUMMARY

CLIENT: AFSHA CONSULTING
PROJECT: LANCASTER/LEBEC TRAFFIC COUNTS
LOCATION: CONNECTOR FROM I-5 SOUTHBOUND TO STATE ROUTE 138/LANCASTER ROAD
DATE: WEDNESDAY DECEMBER 11, 2013

DIRECTION:		CONNECTOR			
TIME	00-15	15-30	30-45	45-60	HOUR TOTALS
0:00	6	1	2	3	12
1:00	2	4	1	1	8
2:00	4	0	2	2	8
3:00	0	0	3	2	5
4:00	3	3	5	3	14
5:00	5	12	23	18	58
6:00	13	12	12	12	49
7:00	14	13	12	6	45
8:00	17	16	12	12	57
9:00	15	9	9	7	40
10:00	6	11	8	9	34
11:00	10	13	14	13	50
12:00	11	6	10	9	36
13:00	17	10	10	13	50
14:00	23	20	12	18	73
15:00	25	26	17	24	92
16:00	24	23	20	22	89
17:00	26	19	17	20	82
18:00	18	14	10	11	53
19:00	14	4	7	12	37
20:00	5	3	6	3	17
21:00	1	3	3	7	14
22:00	2	6	4	3	15
23:00	4	3	2	2	11
				TOTAL	949

AM PEAK HOUR	0515-0615
VOLUME	66
PM PEAK HOUR	1500-1600
VOLUME	92

DIRECTION:					
TIME	00-15	15-30	30-45	45-60	HOUR TOTALS
0:00	0	0	0	0	0
1:00	0	0	0	0	0
2:00	0	0	0	0	0
3:00	0	0	0	0	0
4:00	0	0	0	0	0
5:00	0	0	0	0	0
6:00	0	0	0	0	0
7:00	0	0	0	0	0
8:00	0	0	0	0	0
9:00	0	0	0	0	0
10:00	0	0	0	0	0
11:00	0	0	0	0	0
12:00	0	0	0	0	0
13:00	0	0	0	0	0
14:00	0	0	0	0	0
15:00	0	0	0	0	0
16:00	0	0	0	0	0
17:00	0	0	0	0	0
18:00	0	0	0	0	0
19:00	0	0	0	0	0
20:00	0	0	0	0	0
21:00	0	0	0	0	0
22:00	0	0	0	0	0
23:00	0	0	0	0	0
				TOTAL	0

AM PEAK HOUR	0000-0100
VOLUME	0
PM PEAK HOUR	1200-1300
VOLUME	0

TOTAL BI-DIRECTIONAL VOLUME	949

WILTEC

Phone: (626) 564-1944 Fax: (626) 564-0969 wiltecusa.com

ALXE CLASSIFICATION SURVEYS

CLIENT: AFSHA CONSULTING
PROJECT: LANCASTER/LEBEC TRAFFIC COUNTS
DATE: WEDNESDAY DECEMBER 11, 2013
LOCATION: CONNECTOR FROM I-5 SOUTHBOUND TO STATE ROUTE 138/LANCASTER ROAD
DIRECTION: CONNECTOR RAMP

BEGIN TIME	TOTAL	1 BIKES	2 CARS & TLRS	3 2 AXLE LONG	4 BUSES	5 2 AXLE 6 TIRE	6 3 AXLE SINGLE	7 4 AXLE SINGLE	8 <5AXLE DOUBLE	9 5 AXLE DOUBLE	10 >6AXLE DOUBLE	11 <6AXLE MULTI	12 6 AXLE MULTI	13 >6AXLE MULTI
0:00	12	0	9	0	1	0	0	0	0	2	0	0	0	0
1:00	8	0	4	1	0	0	0	0	0	1	0	2	0	0
2:00	8	0	1	1	0	1	0	0	0	3	0	1	1	0
3:00	5	0	2	0	0	0	0	0	0	2	0	1	0	0
4:00	14	0	8	3	0	1	0	0	0	2	0	0	0	0
5:00	58	1	28	14	1	3	0	0	1	7	0	3	0	0
6:00	49	0	25	12	0	3	1	0	1	6	0	0	1	0
7:00	45	0	13	7	1	3	0	0	2	12	0	7	0	0
8:00	57	0	26	5	0	3	0	0	1	13	0	8	1	0
9:00	40	1	10	6	2	9	1	0	2	8	0	1	0	0
10:00	34	0	13	12	1	2	0	0	0	4	0	2	0	0
11:00	50	0	25	6	3	7	0	0	2	4	0	3	0	0
12:00	36	0	19	1	0	6	1	0	1	8	0	0	0	0
13:00	50	0	25	8	1	3	0	0	2	6	0	5	0	0
14:00	73	0	27	9	0	9	0	0	4	17	0	6	1	0
15:00	92	1	37	16	4	3	1	0	3	25	0	2	0	0
16:00	89	0	44	16	4	7	0	0	0	15	0	3	0	0
17:00	82	1	42	12	1	5	0	0	4	14	0	2	1	0
18:00	53	0	22	10	0	10	0	0	1	9	0	1	0	0
19:00	37	0	19	4	0	3	0	0	1	8	0	2	0	0
20:00	17	0	7	3	1	2	0	0	0	4	0	0	0	0
21:00	14	0	8	2	0	0	0	0	1	3	0	0	0	0
22:00	15	0	6	3	0	0	0	0	0	5	0	1	0	0
23:00	11	0	7	0	0	0	0	0	1	2	0	0	1	0
DAILY TOTALS:	**949**	**4**	**427**	**151**	**20**	**80**	**4**	**0**	**27**	**180**	**0**	**50**	**6**	**0**
PERCENT TOTALS:		**0.4**	**45**	**15.9**	**2.1**	**8.4**	**0.4**	**0**	**2.8**	**19**	**0**	**5.3**	**0.6**	**0**

WILTEC

Phone: (626) 564-1944 Fax: (626) 564-0969

24-HOUR ADT COUNT SUMMARY

CLIENT: AFSHA CONSULTING
PROJECT: LANCASTER/LEBEC TRAFFIC COUNTS
LOCATION: CONNECTOR FROM STATE ROUTE 138
TO I-5 NORTHBOUND
DATE: WEDNESDAY DECEMBER 11, 2013

DIRECTION:		CONNECTOR			
TIME	00-15	15-30	30-45	45-60	HOUR TOTALS
0:00	2	1	3	4	10
1:00	4	4	3	4	15
2:00	4	3	1	3	11
3:00	2	1	0	2	5
4:00	3	3	2	7	15
5:00	7	15	8	15	45
6:00	12	9	15	11	47
7:00	13	18	14	22	67
8:00	21	22	19	20	82
9:00	20	13	10	16	59
10:00	27	11	7	15	60
11:00	12	12	20	13	57
12:00	14	13	12	6	45
13:00	11	18	15	12	56
14:00	17	17	19	18	71
15:00	18	21	21	37	97
16:00	19	15	22	19	75
17:00	19	21	16	16	72
18:00	14	8	9	11	42
19:00	5	10	9	4	28
20:00	10	6	10	8	34
21:00	3	7	12	4	26
22:00	3	6	5	7	21
23:00	4	2	8	3	17
				TOTAL	1057

AM PEAK HOUR	0745-0845
VOLUME	84
PM PEAK HOUR	1515-1615
VOLUME	98

DIRECTION:					
TIME	00-15	15-30	30-45	45-60	HOUR TOTALS
0:00	0	0	0	0	0
1:00	0	0	0	0	0
2:00	0	0	0	0	0
3:00	0	0	0	0	0
4:00	0	0	0	0	0
5:00	0	0	0	0	0
6:00	0	0	0	0	0
7:00	0	0	0	0	0
8:00	0	0	0	0	0
9:00	0	0	0	0	0
10:00	0	0	0	0	0
11:00	0	0	0	0	0
12:00	0	0	0	0	0
13:00	0	0	0	0	0
14:00	0	0	0	0	0
15:00	0	0	0	0	0
16:00	0	0	0	0	0
17:00	0	0	0	0	0
18:00	0	0	0	0	0
19:00	0	0	0	0	0
20:00	0	0	0	0	0
21:00	0	0	0	0	0
22:00	0	0	0	0	0
23:00	0	0	0	0	0
				TOTAL	0

AM PEAK HOUR	0000-0100
VOLUME	0
PM PEAK HOUR	1200-1300
VOLUME	0

TOTAL BI-DIRECTIONAL VOLUME	1057

WILTEC

Phone: (626) 564-1944 Fax: (626) 564-0969 wiltecusa.com

ALXE CLASSIFICATION SURVEYS

CLIENT: AFSHA CONSULTING
PROJECT: LANCASTER/LEBEC TRAFFIC COUNTS
DATE: WEDNESDAY DECEMBER 11, 2013
LOCATION: CONNECTOR FROM STATE ROUTE 138 TO I-5 NB
DIRECTION: CONNECTOR ROAD

BEGIN TIME	TOTAL	1 BIKES	2 CARS & TLRS	3 2 AXLE LONG	4 BUSES	5 2 AXLE 6 TIRE	6 3 AXLE SINGLE	7 4 AXLE SINGLE	8 <5AXLE DOUBLE	9 5 AXLE DOUBLE	10 >6AXLE DOUBLE	11 <6AXLE MULTI	12 6 AXLE MULTI	13 >6AXLE MULTI
0:00	10	0	2	1	0	0	3	0	0	3	0	1	0	0
1:00	15	1	2	0	0	1	0	0	0	11	0	0	0	0
2:00	11	1	1	2	0	2	0	0	0	3	0	2	0	0
3:00	5	0	1	0	0	1	0	0	0	1	0	2	0	0
4:00	15	0	8	3	0	0	0	0	1	2	0	1	0	0
5:00	45	1	21	5	1	6	0	0	1	8	0	1	1	0
6:00	47	1	25	8	0	3	1	0	1	7	0	1	0	0
7:00	67	3	33	9	2	5	0	0	3	10	0	1	1	0
8:00	82	3	31	11	2	8	0	0	4	11	0	9	3	0
9:00	59	0	24	6	0	6	0	0	3	15	1	2	2	0
10:00	60	5	23	5	0	10	0	0	5	9	0	3	0	0
11:00	57	1	25	9	0	7	0	0	4	10	0	1	0	0
12:00	45	1	11	11	2	4	1	0	3	10	0	2	0	0
13:00	56	2	21	12	1	8	1	0	2	7	0	2	0	0
14:00	71	2	25	12	2	13	1	0	2	10	0	4	0	0
15:00	97	4	45	16	2	6	2	0	7	12	0	3	0	0
16:00	75	1	38	8	3	10	0	0	0	12	0	2	1	0
17:00	72	5	29	7	3	11	0	0	3	12	0	1	1	0
18:00	42	2	25	7	1	0	0	0	1	6	0	0	0	0
19:00	28	0	11	5	0	1	1	0	1	6	0	3	0	0
20:00	34	0	11	6	3	1	2	0	0	6	0	5	0	0
21:00	26	4	8	1	0	4	1	0	0	8	0	0	0	0
22:00	21	2	7	2	0	3	1	0	2	3	0	1	0	0
23:00	17	0	6	0	2	1	0	0	0	8	0	0	0	0
DAILY TOTALS:	**1057**	**39**	**433**	**146**	**24**	**111**	**14**	**0**	**43**	**190**	**1**	**47**	**9**	**0**
PERCENT TOTALS:		**3.7**	**41**	**13.8**	**2.3**	**10.5**	**1.3**	**0**	**4.1**	**18**	**0.1**	**4.4**	**0.9**	**0**

WILTEC

Phone: (626) 564-1944 Fax: (626) 564-0969

24-HOUR ADT COUNT SUMMARY

CLIENT: AFSHA CONSULTING
PROJECT: LANCASTER/LEBEC TRAFFIC COUNTS
LOCATION: CONNECTOR FROM STATE ROUTE 138 TO I-5 SOUTHBOUND
DATE: WEDNESDAY DECEMBER 11, 2013

DIRECTION:	LANE 1				
TIME	00-15	15-30	30-45	45-60	HOUR TOTALS
0:00	1	0	0	0	1
1:00	0	0	1	0	1
2:00	1	0	0	0	1
3:00	1	2	0	0	3
4:00	1	3	2	2	8
5:00	7	2	2	4	15
6:00	2	8	6	3	19
7:00	9	2	6	6	23
8:00	0	1	5	6	12
9:00	4	2	4	7	17
10:00	4	2	2	1	9
11:00	3	4	1	3	11
12:00	3	3	7	4	17
13:00	2	2	5	1	10
14:00	2	3	3	5	13
15:00	2	7	8	6	23
16:00	4	2	3	0	9
17:00	0	5	3	2	10
18:00	0	0	2	2	4
19:00	0	1	2	0	3
20:00	0	0	0	1	1
21:00	3	0	0	0	3
22:00	1	0	1	0	2
23:00	0	0	1	0	1
				TOTAL	216

AM PEAK HOUR	0615-0715
VOLUME	26
PM PEAK HOUR	1515-1615
VOLUME	25

DIRECTION:	LANE 2				
TIME	00-15	15-30	30-45	45-60	HOUR TOTALS
0:00	0	0	1	0	1
1:00	0	1	2	1	4
2:00	0	2	1	2	5
3:00	1	1	4	2	8
4:00	1	3	4	4	12
5:00	4	7	6	3	20
6:00	4	5	5	5	19
7:00	5	5	7	3	20
8:00	9	5	6	5	25
9:00	9	4	6	5	24
10:00	8	7	4	10	29
11:00	5	8	4	6	23
12:00	5	1	0	2	8
13:00	4	4	2	2	12
14:00	5	5	8	6	24
15:00	4	11	5	6	26
16:00	1	3	6	2	12
17:00	4	2	2	5	13
18:00	4	0	5	1	10
19:00	1	1	4	0	6
20:00	0	0	0	2	2
21:00	1	2	1	2	6
22:00	0	1	0	2	3
23:00	0	0	0	1	1
				TOTAL	313

AM PEAK HOUR	1000-1100
VOLUME	29
PM PEAK HOUR	1430-1530
VOLUME	29

TOTAL BI-DIRECTIONAL VOLUME	529

WILTEC

Phone: (626) 564-1944 Fax: (626) 564-0969 wiltecusa.com

ALXE CLASSIFICATION SURVEYS

CLIENT: AFSHA CONSULTING
PROJECT: LANCASTER/LEBEC TRAFFIC COUNTS
DATE: WEDNESDAY DECEMBER 11, 2013
LOCATION: CONNECTOR FROM STATE ROUTE 138 TO I-5 SOUTHBOUND
DIRECTION: LANE 1 CONNECTOR

BEGIN TIME	TOTAL	1 BIKES	2 CARS & TLRS	3 2 AXLE LONG	4 BUSES	5 2 AXLE 6 TIRE	6 3 AXLE SINGLE	7 4 AXLE SINGLE	8 <5AXLE DOUBLE	9 5 AXLE DOUBLE	10 >6AXLE DOUBLE	11 <6AXLE MULTI	12 6 AXLE MULTI	13 >6AXLE MULTI
0:00	1	0	0	0	1	0	0	0	0	0	0	0	0	0
1:00	1	0	0	0	0	1	0	0	0	0	0	0	0	0
2:00	1	0	1	0	0	0	0	0	0	0	0	0	0	0
3:00	3	0	1	1	0	1	0	0	0	0	0	0	0	0
4:00	8	0	6	1	0	0	0	0	0	1	0	0	0	0
5:00	15	0	8	5	0	0	0	0	0	1	0	1	0	0
6:00	19	0	15	1	0	1	0	0	1	0	0	1	0	0
7:00	23	0	11	3	0	3	0	0	0	2	0	4	0	0
8:00	12	0	6	3	0	3	0	0	0	0	0	0	0	0
9:00	17	0	3	6	2	4	0	0	0	2	0	0	0	0
10:00	9	0	6	2	0	0	0	0	0	0	0	1	0	0
11:00	11	0	5	4	0	1	0	0	0	0	0	1	0	0
12:00	17	0	7	4	0	5	0	0	0	0	0	1	0	0
13:00	10	0	5	2	0	2	0	0	0	0	0	1	0	0
14:00	13	1	2	4	0	3	0	0	0	3	0	0	0	0
15:00	23	0	11	9	0	3	0	0	0	0	0	0	0	0
16:00	9	0	4	5	0	0	0	0	0	0	0	0	0	0
17:00	10	0	8	1	0	0	0	0	0	0	0	1	0	0
18:00	4	0	3	0	0	0	0	0	0	0	0	1	0	0
19:00	3	0	3	0	0	0	0	0	0	0	0	0	0	0
20:00	1	0	1	0	0	0	0	0	0	0	0	0	0	0
21:00	3	0	1	0	1	0	0	0	0	0	0	1	0	0
22:00	2	0	1	0	0	0	0	0	0	1	0	0	0	0
23:00	1	0	0	0	0	0	0	0	0	1	0	0	0	0
DAILY TOTALS:	**216**	**1**	**108**	**51**	**4**	**27**	**0**	**0**	**1**	**11**	**0**	**13**	**0**	**0**
PERCENT TOTALS:		**0.5**	**50**	**23.6**	**1.9**	**12.5**	**0**	**0**	**0.5**	**5.1**	**0**	**6**	**0**	**0**

WILTEC

Phone: (626) 564-1944 Fax: (626) 564-0969 wiltecusa.com

ALXE CLASSIFICATION SURVEYS

CLIENT: AFSHA CONSULTING
PROJECT: LANCASTER/LEBEC TRAFFIC COUNTS
DATE: WEDNESDAY DECEMBER 11, 2013
LOCATION: CONNECTOR FROM STATE ROUTE 138 TO I-5 SOUTHBOUND
DIRECTION: LANE 2 CONNECTOR

BEGIN TIME	TOTAL	1 BIKES	2 CARS & TLRS	3 2 AXLE LONG	4 BUSES	5 2 AXLE 6 TIRE	6 3 AXLE SINGLE	7 4 AXLE SINGLE	8 <5AXLE DOUBLE	9 5 AXLE DOUBLE	10 >6AXLE DOUBLE	11 <6AXLE MULTI	12 6 AXLE MULTI	13 >6AXLE MULTI
0:00	1	0	0	0	0	0	0	0	0	0	0	1	0	0
1:00	4	0	1	0	2	0	0	0	0	0	0	1	0	0
2:00	5	0	1	0	0	0	0	0	0	0	0	4	0	0
3:00	8	0	2	2	0	0	0	0	0	2	0	2	0	0
4:00	12	0	4	1	0	1	0	0	0	1	0	5	0	0
5:00	20	0	6	6	0	1	0	0	1	3	0	4	0	0
6:00	19	0	8	3	0	0	0	0	1	5	0	2	0	0
7:00	20	0	8	5	0	0	0	0	2	4	0	2	0	0
8:00	25	0	6	6	0	2	0	0	0	3	0	6	0	0
9:00	24	0	8	4	0	0	1	0	0	5	0	6	0	0
10:00	29	0	5	7	0	3	2	0	0	4	1	7	0	0
11:00	23	0	5	4	1	6	3	0	0	2	0	2	0	0
12:00	8	0	2	1	1	1	0	0	0	1	0	2	0	0
13:00	12	0	3	2	0	0	0	0	1	3	0	4	0	0
14:00	24	0	8	6	1	3	0	0	1	3	0	2	0	0
15:00	26	0	10	4	1	7	0	0	0	0	0	3	0	0
16:00	12	0	4	3	1	1	0	0	0	1	0	2	0	0
17:00	13	0	7	0	0	2	1	0	1	2	0	1	0	0
18:00	10	0	2	1	1	1	0	0	0	1	0	3	0	0
19:00	6	0	0	0	1	2	0	0	0	0	0	3	0	0
20:00	2	0	0	0	0	0	0	0	0	0	0	2	0	0
21:00	6	0	2	0	1	0	0	0	0	1	0	2	0	0
22:00	3	0	1	0	0	0	0	0	0	0	0	2	0	0
23:00	1	0	0	0	0	0	0	0	0	0	0	1	0	0
DAILY TOTALS:	**313**	**0**	**93**	**55**	**10**	**30**	**7**	**0**	**7**	**41**	**1**	**69**	**0**	**0**
PERCENT TOTALS:		**0**	**29.7**	**17.6**	**3.2**	**9.6**	**2.2**	**0**	**2.2**	**13.1**	**0.3**	**22**	**0**	**0**

WILTEC

Phone: (626) 564-1944 Fax: (626) 564-0969

24-HOUR ADT COUNT SUMMARY

CLIENT: AFSHA CONSULTING
PROJECT: LANCASTER/LEBEC TRAFFIC COUNTS
LOCATION: STATE ROUTE 138 EAST OF GORMAN POST ROAD
DATE: THURSDAY DECEMBER 12, 2013

DIRECTION:	EB				
TIME	00-15	15-30	30-45	45-60	HOUR TOTALS
0:00	3	3	6	6	18
1:00	4	4	4	3	15
2:00	3	0	4	4	11
3:00	5	3	4	10	22
4:00	3	0	13	8	24
5:00	7	23	34	31	95
6:00	28	20	44	24	116
7:00	33	19	21	17	90
8:00	11	16	12	17	56
9:00	11	19	11	16	57
10:00	18	15	20	15	68
11:00	14	14	27	25	80
12:00	21	22	19	25	87
13:00	22	23	22	19	86
14:00	22	31	26	28	107
15:00	32	32	37	31	132
16:00	38	41	38	32	149
17:00	34	41	29	33	137
18:00	28	24	27	19	98
19:00	18	10	15	15	58
20:00	13	15	9	14	51
21:00	12	5	13	15	45
22:00	6	5	8	9	28
23:00	6	4	12	5	27
				TOTAL	1657

AM PEAK HOUR	0545-0645
VOLUME	123
PM PEAK HOUR	1600-1700
VOLUME	149

DIRECTION:	WB				
TIME	00-15	15-30	30-45	45-60	HOUR TOTALS
0:00	4	0	3	0	7
1:00	6	3	3	1	13
2:00	7	5	2	5	19
3:00	10	0	10	7	27
4:00	3	14	18	16	51
5:00	13	20	26	31	90
6:00	22	27	25	15	89
7:00	29	28	25	29	111
8:00	26	27	29	31	113
9:00	32	28	23	29	112
10:00	23	23	17	25	88
11:00	14	28	31	15	88
12:00	22	18	23	21	84
13:00	18	19	18	26	81
14:00	21	24	34	20	99
15:00	25	44	50	23	142
16:00	31	31	14	20	96
17:00	33	29	24	25	111
18:00	19	21	16	18	74
19:00	15	13	11	13	52
20:00	10	6	5	3	24
21:00	5	3	12	10	30
22:00	5	6	11	5	27
23:00	4	8	5	5	22
				TOTAL	1650

AM PEAK HOUR	0830-0930
VOLUME	120
PM PEAK HOUR	1515-1615
VOLUME	148

TOTAL BI-DIRECTIONAL VOLUME	3307

WILTEC

Phone: (626) 564-1944 Fax: (626) 564-0969 wiltecusa.com

ALXE CLASSIFICATION SURVEYS

CLIENT: AFSHA CONSULTING
PROJECT: LANCASTER/LEBEC TRAFFIC COUNTS
DATE: THURSDAY DECEMBER 12, 2013
LOCATION: STATE ROUTE 138 EAST OF GORMAN POST ROAD
DIRECTION: EASTBOUND

BEGIN TIME	TOTAL	1 BIKES	2 CARS & TLRS	3 2 AXLE LONG	4 BUSES	5 2 AXLE 6 TIRE	6 3 AXLE SINGLE	7 4 AXLE SINGLE	8 <5AXLE DOUBLE	9 5 AXLE DOUBLE	10 >6AXLE DOUBLE	11 <6AXLE MULTI	12 6 AXLE MULTI	13 >6AXLE MULTI
0:00	18	0	11	2	0	1	0	0	0	3	0	1	0	0
1:00	15	0	6	3	0	1	0	0	0	2	0	3	0	0
2:00	11	0	3	0	0	1	0	0	0	2	0	5	0	0
3:00	22	0	7	1	0	0	0	0	1	9	0	4	0	0
4:00	24	0	5	3	1	2	0	0	0	5	0	8	0	0
5:00	95	0	47	19	2	7	0	0	2	8	0	10	0	0
6:00	116	0	43	33	0	17	2	0	1	16	0	4	0	0
7:00	90	0	35	18	1	5	3	0	4	10	0	14	0	0
8:00	56	0	15	8	1	8	0	0	2	9	0	13	0	0
9:00	57	0	21	10	0	5	0	0	0	13	0	7	1	0
10:00	68	1	22	13	3	7	1	0	3	12	0	6	0	0
11:00	80	0	37	18	3	12	0	0	1	3	0	6	0	0
12:00	87	0	37	19	1	14	2	0	1	10	0	3	0	0
13:00	86	1	32	23	0	4	2	0	1	15	0	7	1	0
14:00	107	0	45	23	3	5	0	0	2	21	0	8	0	0
15:00	132	0	59	28	2	10	0	0	5	18	0	7	3	0
16:00	149	0	75	31	2	11	0	0	0	28	0	2	0	0
17:00	137	0	71	32	1	5	1	0	3	16	0	8	0	0
18:00	98	1	46	23	0	7	1	0	0	14	0	6	0	0
19:00	58	0	31	12	1	4	0	0	0	6	0	4	0	0
20:00	51	0	32	4	0	2	0	0	0	8	0	5	0	0
21:00	45	1	19	9	0	3	0	0	1	9	0	3	0	0
22:00	28	0	14	4	0	1	0	0	1	4	0	3	1	0
23:00	27	0	11	8	0	1	0	0	1	5	0	1	0	0
DAILY TOTALS:	**1657**	**4**	**724**	**344**	**21**	**133**	**12**	**0**	**29**	**246**	**0**	**138**	**6**	**0**
PERCENT TOTALS:		**0.2**	**43.7**	**20.8**	**1.3**	**8**	**0.7**	**0**	**1.8**	**14.8**	**0**	**8.3**	**0.4**	**0**

WILTEC

Phone: (626) 564-1944 Fax: (626) 564-0969 wiltecusa.com

ALXE CLASSIFICATION SURVEYS

CLIENT: AFSHA CONSULTING
PROJECT: LANCASTER/LEBEC TRAFFIC COUNTS
DATE: THURSDAY DECEMBER 12, 2013
LOCATION: STATE ROUTE 138 EAST OF GORMAN POST ROAD
DIRECTION: WESTBOUND

BEGIN TIME	TOTAL	1 BIKES	2 CARS & TLRS	3 2 AXLE LONG	4 BUSES	5 2 AXLE 6 TIRE	6 3 AXLE SINGLE	7 4 AXLE SINGLE	8 <5AXLE DOUBLE	9 5 AXLE DOUBLE	10 >6AXLE DOUBLE	11 <6AXLE MULTI	12 6 AXLE MULTI	13 >6AXLE MULTI
0:00	7	0	3	1	0	0	0	0	0	3	0	0	0	0
1:00	13	0	2	0	1	1	0	0	0	4	0	4	1	0
2:00	19	1	2	1	0	0	0	0	0	9	0	6	0	0
3:00	27	0	7	5	1	0	0	0	0	10	0	4	0	0
4:00	51	0	24	9	1	1	0	0	0	10	0	6	0	0
5:00	90	0	46	15	3	6	0	0	0	9	0	11	0	0
6:00	89	0	42	12	0	5	1	0	3	15	0	11	0	0
7:00	111	0	58	19	2	5	0	0	1	18	0	8	0	0
8:00	113	0	41	16	1	11	0	0	3	25	2	13	1	0
9:00	112	3	37	25	7	5	0	0	5	16	0	14	0	0
10:00	88	1	36	17	1	4	1	0	4	17	0	6	1	0
11:00	88	1	29	12	1	12	0	0	3	21	0	8	1	0
12:00	84	0	31	19	1	3	2	0	4	17	0	6	0	1
13:00	81	2	29	23	1	4	0	0	1	17	0	4	0	0
14:00	99	0	40	19	2	4	1	0	3	21	0	9	0	0
15:00	142	0	74	31	1	16	0	0	1	13	0	6	0	0
16:00	96	0	48	15	1	4	0	0	2	19	0	5	1	1
17:00	111	0	56	20	2	10	0	0	0	20	0	3	0	0
18:00	74	0	26	12	3	8	0	0	3	16	0	6	0	0
19:00	52	0	18	9	1	3	0	0	1	13	0	7	0	0
20:00	24	0	11	0	3	0	0	0	1	6	0	3	0	0
21:00	30	0	9	5	1	0	0	0	0	8	0	7	0	0
22:00	27	0	6	2	1	2	0	0	1	13	0	1	1	0
23:00	22	0	9	0	0	0	0	0	0	6	0	5	2	0
DAILY TOTALS:	**1650**	**8**	**684**	**287**	**35**	**104**	**5**	**0**	**36**	**326**	**2**	**153**	**8**	**2**
PERCENT TOTALS:		**0.5**	**41.5**	**17.4**	**2.1**	**6.3**	**0.3**	**0**	**2.2**	**19.8**	**0.1**	**9.3**	**0.5**	**0.1**

WILTEC

Phone: (626) 564-1944 Fax: (626) 564-0969

24-HOUR ADT COUNT SUMMARY

CLIENT: AFSHA CONSULTING
PROJECT: LANCASTER/LEBEC TRAFFIC COUNTS
LOCATION: STATE ROUTE 138 BETWEEN GORMAN POST ROAD AND OLD RIDGE ROUTE
DATE: WEDNESDAY DECEMBER 11, 2013

DIRECTION:	EB				
TIME	00-15	15-30	30-45	45-60	HOUR TOTALS
0:00	4	4	2	1	11
1:00	4	4	4	2	14
2:00	6	0	2	3	11
3:00	1	1	5	5	12
4:00	3	5	7	7	22
5:00	6	19	38	36	99
6:00	22	25	24	18	89
7:00	18	24	26	13	81
8:00	16	26	18	25	85
9:00	19	20	10	12	61
10:00	18	16	20	16	70
11:00	12	16	21	20	69
12:00	12	12	16	20	60
13:00	29	21	23	17	90
14:00	21	30	24	27	102
15:00	30	34	33	30	127
16:00	40	39	30	34	143
17:00	33	30	24	27	114
18:00	37	20	24	18	99
19:00	21	12	10	14	57
20:00	12	6	14	9	41
21:00	4	7	4	13	28
22:00	10	9	5	5	29
23:00	4	4	2	4	14
				TOTAL	1528

AM PEAK HOUR	0530-0630
VOLUME	121
PM PEAK HOUR	1600-1700
VOLUME	143

DIRECTION:	WB				
TIME	00-15	15-30	30-45	45-60	HOUR TOTALS
0:00	1	1	4	3	9
1:00	3	8	3	5	19
2:00	4	4	2	6	16
3:00	3	3	6	3	15
4:00	6	9	11	13	39
5:00	19	19	21	21	80
6:00	26	28	24	20	98
7:00	26	26	33	34	119
8:00	24	28	35	30	117
9:00	30	18	22	30	100
10:00	32	20	19	19	90
11:00	17	26	23	30	96
12:00	17	16	26	15	74
13:00	19	24	23	13	79
14:00	27	30	23	27	107
15:00	26	37	41	48	152
16:00	30	17	28	20	95
17:00	23	30	21	27	101
18:00	20	5	16	12	53
19:00	7	20	10	12	49
20:00	7	11	6	12	36
21:00	12	5	13	5	35
22:00	4	6	7	8	25
23:00	4	2	10	3	19
				TOTAL	1623

AM PEAK HOUR	0815-0915
VOLUME	123
PM PEAK HOUR	1515-1615
VOLUME	156

TOTAL BI-DIRECTIONAL VOLUME	3151

WILTEC

Phone: (626) 564-1944 Fax: (626) 564-0969 wiltecusa.com

ALXE CLASSIFICATION SURVEYS

CLIENT: AFSHA CONSULTING
PROJECT: LANCASTER/LEBEC TRAFFIC COUNTS
DATE: WEDNESDAY DECEMBER 11, 2013
LOCATION: STATE ROUTE 138 BETWEEN GORMAN POST ROAD AND OLD RIDGE ROUTE
DIRECTION: EASTBOUND

BEGIN TIME	TOTAL	1 BIKES	2 CARS & TLRS	3 2 AXLE LONG	4 BUSES	5 2 AXLE 6 TIRE	6 3 AXLE SINGLE	7 4 AXLE SINGLE	8 <5AXLE DOUBLE	9 5 AXLE DOUBLE	10 >6AXLE DOUBLE	11 <6AXLE MULTI	12 6 AXLE MULTI	13 >6AXLE MULTI
0:00	11	0	8	0	0	0	0	0	0	2	0	1	0	0
1:00	14	0	6	1	0	0	0	0	0	3	0	4	0	0
2:00	11	0	2	1	0	1	0	0	0	3	0	3	1	0
3:00	12	1	3	1	0	0	0	0	0	2	0	5	0	0
4:00	22	0	8	5	0	2	0	0	0	2	0	5	0	0
5:00	99	0	50	21	1	9	0	0	1	11	0	6	0	0
6:00	89	0	45	18	1	7	0	0	1	11	0	5	1	0
7:00	81	0	30	12	1	9	0	0	4	14	0	11	0	0
8:00	85	0	35	13	2	2	1	0	1	17	0	13	1	0
9:00	61	0	16	16	2	7	0	0	3	11	0	6	0	0
10:00	70	1	24	17	3	5	1	0	3	6	0	10	0	0
11:00	69	0	35	10	1	7	0	0	3	7	0	6	0	0
12:00	60	0	25	10	0	7	1	0	1	11	0	4	0	1
13:00	90	0	40	20	1	6	0	0	2	12	0	7	0	2
14:00	102	2	43	18	1	10	0	0	5	14	0	8	1	0
15:00	127	0	59	25	2	4	2	0	4	28	0	3	0	0
16:00	143	0	76	30	5	12	0	0	0	14	0	6	0	0
17:00	114	0	57	18	1	7	0	0	4	20	0	6	1	0
18:00	99	0	54	24	0	8	0	0	0	9	0	4	0	0
19:00	57	0	34	5	0	5	0	0	1	8	0	4	0	0
20:00	41	1	19	7	1	4	1	0	0	5	0	3	0	0
21:00	28	0	14	4	0	2	0	0	2	4	0	2	0	0
22:00	29	0	16	6	0	0	0	0	0	5	0	2	0	0
23:00	14	0	8	0	0	1	0	0	1	2	0	1	1	0
DAILY TOTALS:	**1528**	**5**	**707**	**282**	**22**	**115**	**6**	**0**	**36**	**221**	**0**	**125**	**6**	**3**
PERCENT TOTALS:		**0.3**	**46.3**	**18.5**	**1.4**	**7.5**	**0.4**	**0**	**2.4**	**14.5**	**0**	**8.2**	**0.4**	**0.2**

WILTEC

Phone: (626) 564-1944 Fax: (626) 564-0969 wiltecusa.com

ALXE CLASSIFICATION SURVEYS

CLIENT: AFSHA CONSULTING
PROJECT: LANCASTER/LEBEC TRAFFIC COUNTS
DATE: WEDNESDAY DECEMBER 11, 2013
LOCATION: STATE ROUTE 138 BETWEEN GORMAN POST ROAD AND OLD RIDGE ROUTE
DIRECTION: WESTBOUND

BEGIN TIME	TOTAL	1 BIKES	2 CARS & TLRS	3 2 AXLE LONG	4 BUSES	5 2 AXLE 6 TIRE	6 3 AXLE SINGLE	7 4 AXLE SINGLE	8 <5AXLE DOUBLE	9 5 AXLE DOUBLE	10 >6AXLE DOUBLE	11 <6AXLE MULTI	12 6 AXLE MULTI	13 >6AXLE MULTI
0:00	9	0	2	0	1	0	3	0	0	1	0	2	0	0
1:00	19	0	3	0	1	1	0	0	0	13	0	1	0	0
2:00	16	0	3	2	0	1	0	0	0	4	0	6	0	0
3:00	15	0	4	2	1	1	0	0	0	2	0	5	0	0
4:00	39	1	19	6	0	2	0	0	1	5	0	5	0	0
5:00	80	3	37	15	2	5	0	0	0	11	0	6	1	0
6:00	98	1	53	15	1	5	1	0	1	16	0	5	0	0
7:00	119	0	56	20	3	7	0	0	2	24	0	6	1	0
8:00	117	1	46	14	0	8	0	0	2	28	0	15	3	0
9:00	100	0	36	16	3	11	1	0	1	22	0	8	2	0
10:00	90	0	33	14	0	5	0	0	6	20	1	11	0	0
11:00	96	0	36	21	1	13	2	0	4	15	0	4	0	0
12:00	74	4	21	15	4	10	1	0	3	10	0	6	0	0
13:00	79	0	30	19	3	9	0	0	2	10	0	4	2	0
14:00	107	1	37	23	4	10	1	0	1	23	0	7	0	0
15:00	152	1	71	34	3	15	1	0	8	14	0	5	0	0
16:00	95	0	49	17	2	9	0	0	1	12	0	4	1	0
17:00	101	1	48	10	2	12	1	0	3	20	1	3	0	0
18:00	53	1	28	6	1	2	0	0	0	11	0	4	0	0
19:00	49	0	18	10	1	3	2	0	0	9	0	6	0	0
20:00	36	0	9	6	4	1	2	0	1	6	0	7	0	0
21:00	35	0	12	5	1	1	1	0	0	12	0	3	0	0
22:00	25	2	6	3	1	2	1	0	0	7	0	3	0	0
23:00	19	1	6	0	1	1	0	0	0	9	0	1	0	0
DAILY TOTALS:	**1623**	**17**	**663**	**273**	**40**	**134**	**17**	**0**	**36**	**304**	**2**	**127**	**10**	**0**
PERCENT TOTALS:		**1**	**40.9**	**16.8**	**2.5**	**8.3**	**1**	**0**	**2.2**	**18.7**	**0.1**	**7.8**	**0.6**	**0**

WILTEC

Phone: (626) 564-1944 Fax: (626) 564-0969

24-HOUR ADT COUNT SUMMARY

CLIENT: AFSHA CONSULTING
PROJECT: LANCASTER/LEBEC TRAFFIC COUNTS
LOCATION: STATE ROUTE 138 BETWEEN OLD RIDGE ROUTE AND 300TH STREET/WEST AVENUE C-6
DATE: WEDNESDAY DECEMBER 4, 2013

DIRECTION:	EB				
TIME	00-15	15-30	30-45	45-60	HOUR TOTALS
0:00	4	3	6	1	14
1:00	4	0	1	2	7
2:00	1	3	0	1	5
3:00	0	1	2	3	6
4:00	2	0	6	5	13
5:00	4	10	26	20	60
6:00	24	16	11	12	63
7:00	10	17	18	14	59
8:00	11	13	14	9	47
9:00	5	17	13	15	50
10:00	21	10	8	16	55
11:00	11	11	14	11	47
12:00	12	20	18	13	63
13:00	11	12	15	26	64
14:00	25	13	23	29	90
15:00	29	45	35	31	140
16:00	45	24	35	36	140
17:00	33	33	27	25	118
18:00	21	27	24	16	88
19:00	14	12	14	10	50
20:00	7	5	8	4	24
21:00	6	9	8	6	29
22:00	4	7	8	4	23
23:00	7	0	5	4	16
				TOTAL	1271

AM PEAK HOUR	0530-0630
VOLUME	86
PM PEAK HOUR	1515-1615
VOLUME	156

DIRECTION:	WB				
TIME	00-15	15-30	30-45	45-60	HOUR TOTALS
0:00	1	4	2	4	11
1:00	3	4	0	2	9
2:00	3	5	7	1	16
3:00	3	7	5	7	22
4:00	6	10	12	18	46
5:00	11	29	15	13	68
6:00	20	31	26	25	102
7:00	18	38	20	16	92
8:00	22	19	26	17	84
9:00	25	22	19	18	84
10:00	19	15	16	16	66
11:00	21	23	20	12	76
12:00	18	12	20	20	70
13:00	27	16	16	22	81
14:00	20	15	19	20	74
15:00	26	28	27	20	101
16:00	18	24	14	16	72
17:00	15	19	14	12	60
18:00	9	7	4	2	22
19:00	4	1	4	1	10
20:00	1	2	0	2	5
21:00	4	2	2	2	10
22:00	2	4	3	2	11
23:00	2	3	1	0	6
				TOTAL	1198

AM PEAK HOUR	0630-0730
VOLUME	107
PM PEAK HOUR	1445-1545
VOLUME	101

TOTAL BI-DIRECTIONAL VOLUME	2469

WILTEC

Phone: (626) 564-1944 Fax: (626) 564-0969 wiltecusa.com

ALXE CLASSIFICATION SURVEYS

CLIENT: AFSHA CONSULTING
PROJECT: LANCASTER/LEBEC TRAFFIC COUNTS
DATE: WEDNESDAY DECEMBER 4, 2013
LOCATION: STATE ROUTE 138 BETWEEN OLD RIDGE ROUTE AND 300TH STREET/WEST AVENUE C-6
DIRECTION: EASTBOUND

BEGIN TIME	TOTAL	1 BIKES	2 CARS & TLRS	3 2 AXLE LONG	4 BUSES	5 2 AXLE 6 TIRE	6 3 AXLE SINGLE	7 4 AXLE SINGLE	8 <5AXLE DOUBLE	9 5 AXLE DOUBLE	10 >6AXLE DOUBLE	11 <6AXLE MULTI	12 6 AXLE MULTI	13 >6AXLE MULTI
0:00	14	0	8	0	0	2	0	0	0	4	0	0	0	0
1:00	7	0	5	0	0	0	0	0	0	2	0	0	0	0
2:00	5	0	3	2	0	0	0	0	0	0	0	0	0	0
3:00	6	0	0	1	1	1	0	0	0	0	0	1	0	2
4:00	13	0	5	3	0	1	0	0	0	1	0	3	0	0
5:00	60	0	26	15	0	10	0	0	0	5	0	4	0	0
6:00	63	1	33	16	1	9	0	0	1	2	0	0	0	0
7:00	59	0	26	7	0	9	4	0	6	4	0	3	0	0
8:00	47	1	15	11	2	5	1	0	4	6	0	2	0	0
9:00	50	1	19	11	0	1	0	0	2	13	0	2	1	0
10:00	55	0	16	13	2	4	2	0	6	9	0	3	0	0
11:00	47	0	23	12	3	2	1	0	1	4	0	1	0	0
12:00	63	0	30	16	0	2	1	0	3	10	0	1	0	0
13:00	64	0	32	13	6	5	0	0	2	4	0	2	0	0
14:00	90	2	34	18	1	11	3	0	8	9	0	3	1	0
15:00	140	3	67	32	4	8	0	0	4	18	0	2	2	0
16:00	140	2	73	26	4	9	0	0	3	20	0	1	2	0
17:00	118	3	66	22	0	16	0	0	1	9	0	1	0	0
18:00	88	1	48	21	1	6	0	0	4	6	0	1	0	0
19:00	50	3	32	3	0	2	0	0	3	6	0	1	0	0
20:00	24	0	18	5	0	1	0	0	0	0	0	0	0	0
21:00	29	1	16	4	0	1	0	0	2	3	0	2	0	0
22:00	23	0	12	6	0	2	0	0	0	3	0	0	0	0
23:00	16	0	10	3	1	0	0	0	0	2	0	0	0	0
DAILY TOTALS:	**1271**	**18**	**617**	**260**	**26**	**107**	**12**	**0**	**50**	**140**	**0**	**33**	**6**	**2**
PERCENT TOTALS:		**1.4**	**48.5**	**20.5**	**2**	**8.4**	**0.9**	**0**	**3.9**	**11**	**0**	**2.6**	**0.5**	**0.2**

WILTEC

Phone: (626) 564-1944 Fax: (626) 564-0969 wiltecusa.com

ALXE CLASSIFICATION SURVEYS

CLIENT: AFSHA CONSULTING
PROJECT: LANCASTER/LEBEC TRAFFIC COUNTS
DATE: WEDNESDAY DECEMBER 4, 2013
LOCATION: STATE ROUTE 138 BETWEEN OLD RIDGE ROUTE AND 300TH STREET/WEST AVENUE C-6
DIRECTION: WESTBOUND

BEGIN TIME	TOTAL	1 BIKES	2 CARS & TLRS	3 2 AXLE LONG	4 BUSES	5 2 AXLE 6 TIRE	6 3 AXLE SINGLE	7 4 AXLE SINGLE	8 <5AXLE DOUBLE	9 5 AXLE DOUBLE	10 >6AXLE DOUBLE	11 <6AXLE MULTI	12 6 AXLE MULTI	13 >6AXLE MULTI
0:00	11	0	4	0	1	0	0	0	0	6	0	0	0	0
1:00	9	0	2	1	0	0	0	0	0	5	0	1	0	0
2:00	16	0	1	2	2	2	1	0	0	5	0	3	0	0
3:00	22	1	10	2	0	2	0	0	0	5	0	2	0	0
4:00	46	0	28	6	1	5	0	0	0	2	0	4	0	0
5:00	68	0	42	11	2	4	0	0	1	7	0	1	0	0
6:00	102	0	55	21	6	4	2	0	1	12	0	0	1	0
7:00	92	0	41	22	3	10	2	0	1	7	0	5	1	0
8:00	84	0	35	14	3	5	0	0	5	16	0	4	2	0
9:00	84	0	32	16	1	7	1	0	6	16	0	3	2	0
10:00	66	0	25	17	3	4	2	0	3	11	0	1	0	0
11:00	76	0	29	15	3	2	0	0	6	21	0	0	0	0
12:00	70	0	27	11	4	7	1	0	4	14	0	2	0	0
13:00	81	0	32	14	0	9	1	0	3	20	0	2	0	0
14:00	74	0	22	14	7	6	2	0	3	17	0	1	1	1
15:00	101	0	42	27	0	11	1	0	1	18	0	1	0	0
16:00	72	0	32	16	3	6	0	0	1	12	0	1	1	0
17:00	60	1	18	10	2	7	0	0	4	14	0	2	2	0
18:00	22	4	5	3	3	4	0	0	0	3	0	0	0	0
19:00	10	5	1	2	1	0	0	0	1	0	0	0	0	0
20:00	5	2	0	0	3	0	0	0	0	0	0	0	0	0
21:00	10	7	0	2	0	0	0	0	0	1	0	0	0	0
22:00	11	4	1	1	1	3	0	0	1	0	0	0	0	0
23:00	6	4	0	1	1	0	0	0	0	0	0	0	0	0
DAILY TOTALS:	**1198**	**28**	**484**	**228**	**50**	**98**	**13**	**0**	**41**	**212**	**0**	**33**	**10**	**1**
PERCENT TOTALS:		**2.3**	**40.4**	**19**	**4.2**	**8.2**	**1.1**	**0**	**3.4**	**17.7**	**0**	**2.8**	**0.8**	**0.1**

WILTEC

Phone: (626) 564-1944 Fax: (626) 564-0969

24-HOUR ADT COUNT SUMMARY

CLIENT: AFSHA CONSULTING
PROJECT: LANCASTER/LEBEC TRAFFIC COUNTS
LOCATION: STATE ROUTE 138 BETWEEN 280TH STREET AND 270TH STREET
DATE: WEDNESDAY DECEMBER 4, 2013

DIRECTION:	EB				
TIME	00-15	15-30	30-45	45-60	HOUR TOTALS
0:00	4	4	4	3	15
1:00	4	0	1	1	6
2:00	2	1	1	1	5
3:00	1	1	3	3	8
4:00	0	2	5	5	12
5:00	7	10	22	20	59
6:00	26	16	13	12	67
7:00	9	13	17	15	54
8:00	10	15	18	9	52
9:00	7	19	11	16	53
10:00	19	15	10	15	59
11:00	16	14	10	14	54
12:00	14	16	16	17	63
13:00	13	10	15	29	67
14:00	34	14	20	35	103
15:00	30	40	30	36	136
16:00	40	30	36	42	148
17:00	28	32	30	24	114
18:00	18	25	26	17	86
19:00	14	7	16	9	46
20:00	8	3	7	6	24
21:00	7	7	10	5	29
22:00	5	6	8	4	23
23:00	8	0	5	6	19
				TOTAL	1302

AM PEAK HOUR	0530-0630
VOLUME	84
PM PEAK HOUR	1600-1700
VOLUME	148

DIRECTION:	WB				
TIME	00-15	15-30	30-45	45-60	HOUR TOTALS
0:00	2	5	2	2	11
1:00	3	4	0	2	9
2:00	4	5	8	0	17
3:00	3	5	4	6	18
4:00	6	11	13	18	48
5:00	11	28	18	20	77
6:00	28	29	23	22	102
7:00	20	35	22	16	93
8:00	20	21	22	14	77
9:00	25	26	13	19	83
10:00	15	12	20	15	62
11:00	18	23	22	16	79
12:00	17	13	22	15	67
13:00	23	15	24	18	80
14:00	22	14	16	18	70
15:00	26	24	35	18	103
16:00	19	25	16	18	78
17:00	23	20	16	12	71
18:00	26	15	14	10	65
19:00	13	5	8	9	35
20:00	10	9	9	6	34
21:00	13	9	7	5	34
22:00	12	9	5	7	33
23:00	3	5	7	2	17
				TOTAL	1363

AM PEAK HOUR	0600-0700
VOLUME	102
PM PEAK HOUR	1445-1545
VOLUME	103

TOTAL BI-DIRECTIONAL VOLUME	2665

WILTEC

Phone: (626) 564-1944 Fax: (626) 564-0969 wiltecusa.com

ALXE CLASSIFICATION SURVEYS

CLIENT: AFSHA CONSULTING
PROJECT: LANCASTER/LEBEC TRAFFIC COUNTS
DATE: STATE ROUTE 138 BETWEEN 280TH STREET
LOCATION: AND 270TH STREET
DIRECTION: EASTBOUND

BEGIN TIME	TOTAL	1 BIKES	2 CARS & TLRS	3 2 AXLE LONG	4 BUSES	5 2 AXLE 6 TIRE	6 3 AXLE SINGLE	7 4 AXLE SINGLE	8 <5AXLE DOUBLE	9 5 AXLE DOUBLE	10 >6AXLE DOUBLE	11 <6AXLE MULTI	12 6 AXLE MULTI	13 >6AXLE MULTI
0:00	15	0	10	0	0	2	0	0	1	2	0	0	0	0
1:00	6	0	5	0	0	0	0	0	0	1	0	0	0	0
2:00	5	0	2	2	0	0	0	0	0	1	0	0	0	0
3:00	8	0	2	1	0	1	0	0	0	1	0	1	0	2
4:00	12	0	5	3	0	1	0	0	0	0	0	3	0	0
5:00	59	0	27	18	0	6	0	0	0	5	0	3	0	0
6:00	67	0	40	12	1	8	0	0	1	3	0	1	0	1
7:00	54	1	22	9	0	8	0	0	5	6	0	3	0	0
8:00	52	2	19	7	2	7	2	0	1	10	0	2	0	0
9:00	53	1	23	9	0	1	0	0	1	15	0	2	1	0
10:00	59	1	15	19	0	4	2	0	4	11	0	3	0	0
11:00	54	0	29	11	2	5	1	0	3	2	0	1	0	0
12:00	63	0	33	13	0	2	0	0	2	12	0	1	0	0
13:00	67	0	31	11	6	7	0	0	4	6	0	2	0	0
14:00	103	2	41	22	1	11	3	0	8	11	0	3	1	0
15:00	136	5	61	35	3	7	0	0	5	17	0	2	1	0
16:00	148	4	80	23	3	14	1	0	3	17	0	1	2	0
17:00	114	2	67	19	0	11	0	0	1	13	0	1	0	0
18:00	86	0	45	20	0	7	0	0	3	10	0	1	0	0
19:00	46	0	29	2	0	2	0	0	4	8	0	1	0	0
20:00	24	0	20	3	0	1	0	0	0	0	0	0	0	0
21:00	29	0	17	3	0	1	0	0	1	5	0	2	0	0
22:00	23	0	12	6	0	2	0	0	0	3	0	0	0	0
23:00	19	0	13	3	1	0	0	0	0	2	0	0	0	0
DAILY TOTALS:	**1302**	**18**	**648**	**251**	**19**	**108**	**9**	**0**	**47**	**161**	**0**	**33**	**5**	**3**
PERCENT TOTALS:		**1.4**	**49.8**	**19.3**	**1.5**	**8.3**	**0.7**	**0**	**3.6**	**12.4**	**0**	**2.5**	**0.4**	**0.2**

WILTEC

Phone: (626) 564-1944 Fax: (626) 564-0969 wiltecusa.com

ALXE CLASSIFICATION SURVEYS

CLIENT: AFSHA CONSULTING
PROJECT: LANCASTER/LEBEC TRAFFIC COUNTS
DATE: STATE ROUTE 138 BETWEEN 280TH STREET
LOCATION: AND 270TH STREET
DIRECTION: WESTBOUND

BEGIN TIME	TOTAL	1 BIKES	2 CARS & TLRS	3 2 AXLE LONG	4 BUSES	5 2 AXLE 6 TIRE	6 3 AXLE SINGLE	7 4 AXLE SINGLE	8 <5AXLE DOUBLE	9 5 AXLE DOUBLE	10 >6AXLE DOUBLE	11 <6AXLE MULTI	12 6 AXLE MULTI	13 >6AXLE MULTI
0:00	11	3	5	0	1	1	0	0	0	1	0	0	0	0
1:00	9	0	2	2	0	0	0	0	0	4	0	1	0	0
2:00	17	1	2	2	1	3	1	0	2	2	0	3	0	0
3:00	18	2	6	2	0	2	0	0	0	4	0	2	0	0
4:00	48	0	29	8	1	4	0	0	0	2	0	4	0	0
5:00	77	1	47	14	2	6	0	0	1	5	0	1	0	0
6:00	102	2	57	19	5	5	1	0	2	10	0	0	1	0
7:00	93	2	41	21	6	9	1	0	2	6	0	5	0	0
8:00	77	2	29	14	4	6	1	0	4	12	0	4	1	0
9:00	83	0	34	17	3	4	1	0	10	11	0	3	0	0
10:00	62	2	23	14	3	6	1	0	5	7	0	1	0	0
11:00	79	6	29	16	3	4	0	0	4	17	0	0	0	0
12:00	67	1	26	11	3	8	2	0	3	11	0	2	0	0
13:00	80	4	30	17	5	6	1	0	6	9	0	2	0	0
14:00	70	2	21	12	7	9	1	0	4	12	0	1	1	0
15:00	103	4	43	28	2	11	1	0	3	10	0	1	0	0
16:00	78	1	34	17	3	6	0	0	5	10	0	1	1	0
17:00	71	5	23	12	2	6	0	0	3	17	0	2	1	0
18:00	65	0	38	7	1	5	0	0	0	11	0	3	0	0
19:00	35	0	19	3	1	3	0	0	1	8	0	0	0	0
20:00	34	0	13	5	1	3	0	0	2	9	0	1	0	0
21:00	34	2	6	2	5	1	0	0	2	15	0	0	1	0
22:00	33	4	11	3	1	2	0	0	1	11	0	0	0	0
23:00	17	0	4	3	1	0	0	0	0	9	0	0	0	0
DAILY TOTALS:	**1363**	**44**	**572**	**249**	**61**	**110**	**11**	**0**	**60**	**213**	**0**	**37**	**6**	**0**
PERCENT TOTALS:		**3.2**	**42**	**18.3**	**4.5**	**8.1**	**0.8**	**0**	**4.4**	**15.6**	**0**	**2.7**	**0.4**	**0**

WILTEC

Phone: (626) 564-1944 Fax: (626) 564-0969

24-HOUR ADT COUNT SUMMARY

CLIENT: AFSHA CONSULTING
PROJECT: LANCASTER/LEBEC TRAFFIC COUNTS
LOCATION: STATE ROUTE 138 BETWEEN THREE POINTS ROAD AND 245TH STREET WEST/WEST AVENUE D
DATE: WEDNESDAY DECEMBER 4, 2013

DIRECTION:	EB				
TIME	00-15	15-30	30-45	45-60	HOUR TOTALS
0:00	5	3	4	2	14
1:00	5	0	3	1	9
2:00	2	1	1	1	5
3:00	1	1	3	3	8
4:00	1	1	5	5	12
5:00	9	10	24	19	62
6:00	26	17	13	14	70
7:00	13	12	21	18	64
8:00	10	15	18	9	52
9:00	8	17	16	12	53
10:00	17	18	9	16	60
11:00	13	18	10	13	54
12:00	16	16	12	19	63
13:00	13	12	16	23	64
14:00	36	16	21	36	109
15:00	26	40	29	32	127
16:00	36	31	39	37	143
17:00	28	34	28	22	112
18:00	18	22	25	16	81
19:00	13	8	13	8	42
20:00	10	3	5	4	22
21:00	7	6	10	5	28
22:00	4	6	8	4	22
23:00	8	0	5	4	17
				TOTAL	1293

AM PEAK HOUR	0530-0630
VOLUME	86
PM PEAK HOUR	1600-1700
VOLUME	143

DIRECTION:	WB				
TIME	00-15	15-30	30-45	45-60	HOUR TOTALS
0:00	3	5	4	5	17
1:00	4	2	1	2	9
2:00	4	4	8	0	16
3:00	4	3	2	6	15
4:00	7	10	13	17	47
5:00	8	27	16	21	72
6:00	20	32	23	27	102
7:00	17	30	19	15	81
8:00	19	21	18	15	73
9:00	20	21	14	18	73
10:00	18	13	21	14	66
11:00	18	20	21	13	72
12:00	16	13	23	17	69
13:00	22	18	22	26	88
14:00	20	16	19	17	72
15:00	28	26	37	21	112
16:00	20	21	18	16	75
17:00	27	19	22	16	84
18:00	29	10	15	12	66
19:00	11	7	10	12	40
20:00	8	10	10	8	36
21:00	12	9	7	5	33
22:00	12	9	4	8	33
23:00	2	6	7	1	16
				TOTAL	1367

AM PEAK HOUR	0600-0700
VOLUME	102
PM PEAK HOUR	1500-1600
VOLUME	112

TOTAL BI-DIRECTIONAL VOLUME	2660

WILTEC

Phone: (626) 564-1944 Fax: (626) 564-0969 wiltecusa.com

ALXE CLASSIFICATION SURVEYS

CLIENT: AFSHA CONSULTING
PROJECT: LANCASTER/LEBEC TRAFFIC COUNTS
DATE: WEDNESDAY DECEMBER 4, 2013
LOCATION: STATE ROUTE 138 BETWEEN THREE POINTS ROAD AND 245TH STREET WEST/WEST AVENUE D
DIRECTION: EASTBOUND

BEGIN TIME	TOTAL	1 BIKES	2 CARS & TLRS	3 2 AXLE LONG	4 BUSES	5 2 AXLE 6 TIRE	6 3 AXLE SINGLE	7 4 AXLE SINGLE	8 <5AXLE DOUBLE	9 5 AXLE DOUBLE	10 >6AXLE DOUBLE	11 <6AXLE MULTI	12 6 AXLE MULTI	13 >6AXLE MULTI
0:00	14	0	8	0	0	2	0	0	1	3	0	0	0	0
1:00	9	0	7	1	0	0	0	0	0	1	0	0	0	0
2:00	5	0	2	2	0	0	0	0	0	1	0	0	0	0
3:00	8	0	2	1	1	1	0	0	0	0	0	1	0	2
4:00	12	0	5	3	0	1	0	0	0	0	0	3	0	0
5:00	62	0	28	17	2	8	0	0	0	4	0	3	0	0
6:00	70	0	37	15	2	10	0	0	0	4	0	1	0	1
7:00	64	1	32	9	0	9	0	0	4	6	0	3	0	0
8:00	52	1	22	9	1	4	0	0	3	10	0	2	0	0
9:00	53	0	27	6	0	1	0	0	2	15	0	1	1	0
10:00	60	0	17	19	1	3	1	0	5	10	0	4	0	0
11:00	54	0	30	13	3	4	1	0	0	2	0	1	0	0
12:00	63	0	32	12	1	2	0	1	3	11	0	1	0	0
13:00	64	0	27	15	6	7	0	0	3	4	0	2	0	0
14:00	109	3	42	24	1	15	3	0	7	10	0	3	1	0
15:00	127	3	52	37	3	7	0	0	5	17	0	2	1	0
16:00	143	0	75	24	2	13	0	0	4	22	0	1	2	0
17:00	112	2	62	20	0	13	0	0	0	14	0	1	0	0
18:00	81	0	40	21	1	6	0	0	4	8	0	1	0	0
19:00	42	2	24	2	0	4	0	0	3	6	0	1	0	0
20:00	22	0	18	3	0	1	0	0	0	0	0	0	0	0
21:00	28	1	15	3	0	2	0	0	1	4	0	2	0	0
22:00	22	0	10	6	0	3	0	0	0	3	0	0	0	0
23:00	17	0	11	3	1	0	0	0	0	2	0	0	0	0
DAILY TOTALS:	**1293**	**13**	**625**	**265**	**25**	**116**	**5**	**1**	**45**	**157**	**0**	**33**	**5**	**3**
PERCENT TOTALS:		**1**	**48.3**	**20.5**	**1.9**	**9**	**0.4**	**0.1**	**3.5**	**12.1**	**0**	**2.6**	**0.4**	**0.2**

CARS	152
TRUCKS	57
	0.375

WILTEC

Phone: (626) 564-1944 Fax: (626) 564-0969 wiltecusa.com

ALXE CLASSIFICATION SURVEYS

CLIENT: AFSHA CONSULTING
PROJECT: LANCASTER/LEBEC TRAFFIC COUNTS
DATE: WEDNESDAY DECEMBER 4, 2013
LOCATION: STATE ROUTE 138 BETWEEN THREE POINTS ROAD AND 245TH STREET WEST/WEST AVENUE D
DIRECTION: WESTBOUND

BEGIN TIME	TOTAL	1 BIKES	2 CARS & TLRS	3 2 AXLE LONG	4 BUSES	5 2 AXLE 6 TIRE	6 3 AXLE SINGLE	7 4 AXLE SINGLE	8 <5AXLE DOUBLE	9 5 AXLE DOUBLE	10 >6AXLE DOUBLE	11 <6AXLE MULTI	12 6 AXLE MULTI	13 >6AXLE MULTI
0:00	17	0	10	0	1	0	0	0	0	6	0	0	0	0
1:00	9	0	2	1	0	0	0	0	0	5	0	1	0	0
2:00	16	0	2	1	1	2	1	0	1	4	0	4	0	0
3:00	15	0	5	1	0	1	0	0	0	6	0	2	0	0
4:00	47	0	28	7	1	5	0	0	0	2	0	4	0	0
5:00	72	0	42	12	3	5	0	0	1	8	0	1	0	0
6:00	102	3	59	19	5	3	3	0	0	9	0	0	1	0
7:00	81	0	37	16	3	8	2	0	1	8	0	5	1	0
8:00	73	0	27	12	3	5	1	0	4	15	0	4	2	0
9:00	73	1	28	12	1	6	0	0	8	12	0	3	2	0
10:00	66	0	22	16	5	6	0	0	3	13	0	1	0	0
11:00	72	0	29	15	3	3	0	0	3	19	0	0	0	0
12:00	69	0	25	11	5	9	2	0	4	11	0	2	0	0
13:00	88	4	30	19	3	8	1	0	4	16	0	2	1	0
14:00	72	2	21	12	5	12	1	0	4	13	0	1	0	1
15:00	112	2	51	30	2	9	1	0	2	14	0	1	0	0
16:00	75	1	32	15	3	8	0	0	2	12	0	1	1	0
17:00	84	1	33	17	2	6	0	0	2	20	0	2	1	0
18:00	66	1	36	8	1	5	0	0	0	12	0	3	0	0
19:00	40	0	24	2	0	3	0	0	0	11	0	0	0	0
20:00	36	0	15	4	1	4	0	0	1	10	0	1	0	0
21:00	33	0	5	3	4	1	0	0	2	17	0	0	1	0
22:00	33	1	11	3	1	1	0	0	1	15	0	0	0	0
23:00	16	0	3	2	1	0	0	0	0	10	0	0	0	0
DAILY TOTALS:	**1367**	**16**	**577**	**238**	**54**	**110**	**12**	**0**	**43**	**268**	**0**	**38**	**10**	**1**
PERCENT TOTALS:		**1.2**	**42.2**	**17.4**	**4**	**8**	**0.9**	**0**	**3.1**	**19.6**	**0**	**2.8**	**0.7**	**0.1**

WILTEC

Phone: (626) 564-1944 Fax: (626) 564-0969

24-HOUR ADT COUNT SUMMARY

CLIENT: AFSHA CONSULTING
PROJECT: LANCASTER/LEBEC TRAFFIC COUNTS
LOCATION: STATE ROUTE 138 BETWEEN 230th STREET WEST AND 190th STREET WEST
DATE: WEDNESDAY DECEMBER 4, 2013

DIRECTION:	EB				
TIME	00-15	15-30	30-45	45-60	HOUR TOTALS
0:00	3	2	4	3	12
1:00	3	1	0	2	6
2:00	3	0	1	1	5
3:00	0	0	3	3	6
4:00	1	3	4	5	13
5:00	8	9	16	28	61
6:00	25	17	12	10	64
7:00	16	6	19	27	68
8:00	10	16	16	10	52
9:00	9	16	19	14	58
10:00	16	11	10	8	45
11:00	19	15	12	14	60
12:00	15	14	10	23	62
13:00	17	11	11	14	53
14:00	31	24	18	24	97
15:00	25	34	41	28	128
16:00	29	38	28	38	133
17:00	23	25	27	13	88
18:00	23	14	17	12	66
19:00	10	4	11	5	30
20:00	9	1	2	5	17
21:00	5	2	7	2	16
22:00	3	3	6	6	18
23:00	3	2	2	4	11
				TOTAL	1169

AM PEAK HOUR	0530-0630
VOLUME	86
PM PEAK HOUR	1530-1630
VOLUME	136

DIRECTION:	WB				
TIME	00-15	15-30	30-45	45-60	HOUR TOTALS
0:00	6	3	2	4	15
1:00	3	2	2	2	9
2:00	4	3	5	0	12
3:00	3	4	2	4	13
4:00	3	6	10	15	34
5:00	9	17	11	19	56
6:00	19	28	21	25	93
7:00	17	24	13	13	67
8:00	12	14	12	15	53
9:00	18	14	15	15	62
10:00	13	13	14	15	55
11:00	21	19	16	13	69
12:00	11	14	23	20	68
13:00	19	14	22	19	74
14:00	18	16	18	15	67
15:00	39	19	28	12	98
16:00	20	21	15	18	74
17:00	26	17	19	18	80
18:00	20	22	11	13	66
19:00	12	8	6	12	38
20:00	9	9	10	7	35
21:00	15	9	9	9	42
22:00	7	10	5	7	29
23:00	1	7	7	2	17
				TOTAL	1226

AM PEAK HOUR	0600-0700
VOLUME	93
PM PEAK HOUR	1445-1545
VOLUME	101

TOTAL BI-DIRECTIONAL VOLUME	2395

WILTEC

Phone: (626) 564-1944 Fax: (626) 564-0969 wiltecusa.com

ALXE CLASSIFICATION SURVEYS

CLIENT: AFSHA CONSULTING
PROJECT: LANCASTER/LEBEC TRAFFIC COUNTS
DATE: WEDNESDAY DECEMBER 4, 2013
LOCATION: STATE ROUTE 138 BETWEEN 230TH STREET WEST AND 190TH STREET WEST
DIRECTION: EASTBOUND

BEGIN TIME	TOTAL	1 BIKES	2 CARS & TLRS	3 2 AXLE LONG	4 BUSES	5 2 AXLE 6 TIRE	6 3 AXLE SINGLE	7 4 AXLE SINGLE	8 <5AXLE DOUBLE	9 5 AXLE DOUBLE	10 >6AXLE DOUBLE	11 <6AXLE MULTI	12 6 AXLE MULTI	13 >6AXLE MULTI
0:00	12	0	7	0	0	1	0	0	0	4	0	0	0	0
1:00	6	0	5	0	0	0	0	0	0	1	0	0	0	0
2:00	5	0	3	1	0	0	0	0	0	1	0	0	0	0
3:00	6	0	1	1	0	1	0	0	0	1	0	0	0	2
4:00	13	0	5	3	0	1	0	0	0	1	0	3	0	0
5:00	61	0	30	17	2	6	0	0	0	3	0	3	0	0
6:00	64	0	37	12	2	8	0	0	0	3	0	2	0	0
7:00	68	0	35	10	0	10	0	0	2	8	0	3	0	0
8:00	52	0	27	6	1	7	0	0	1	8	0	2	0	0
9:00	58	1	25	10	0	6	0	0	4	11	0	1	0	0
10:00	45	0	12	12	2	3	2	0	4	8	0	2	0	0
11:00	60	0	33	15	2	1	1	0	1	4	0	3	0	0
12:00	62	1	32	9	4	4	0	0	2	9	0	1	0	0
13:00	53	0	23	13	5	4	0	0	2	3	0	2	0	1
14:00	97	1	42	15	3	12	2	0	6	14	0	2	0	0
15:00	128	4	46	40	4	10	1	0	3	16	0	3	1	0
16:00	133	2	66	20	2	15	0	0	1	23	0	1	3	0
17:00	88	1	43	17	1	11	0	0	0	14	0	1	0	0
18:00	66	0	32	14	1	8	0	0	1	9	0	1	0	0
19:00	30	0	14	1	0	1	0	0	1	11	0	2	0	0
20:00	17	0	13	1	0	1	0	0	1	1	0	0	0	0
21:00	16	0	8	2	0	0	0	0	1	3	0	2	0	0
22:00	18	0	7	6	0	2	0	0	0	3	0	0	0	0
23:00	11	0	6	2	1	0	0	0	0	2	0	0	0	0
DAILY TOTALS:	**1169**	**10**	**552**	**227**	**30**	**112**	**6**	**0**	**30**	**161**	**0**	**34**	**4**	**3**
PERCENT TOTALS:		**0.9**	**47.2**	**19.4**	**2.6**	**9.6**	**0.5**	**0**	**2.6**	**13.8**	**0**	**2.9**	**0.3**	**0.3**

WILTEC

Phone: (626) 564-1944 Fax: (626) 564-0969 wiltecusa.com

ALXE CLASSIFICATION SURVEYS

CLIENT: AFSHA CONSULTING
PROJECT: LANCASTER/LEBEC TRAFFIC COUNTS
DATE: WEDNESDAY DECEMBER 4, 2013
LOCATION: STATE ROUTE 138 BETWEEN 230TH STREET WEST AND 190TH STREET WEST
DIRECTION: WESTBOUND

BEGIN TIME	TOTAL	1 BIKES	2 CARS & TLRS	3 2 AXLE LONG	4 BUSES	5 2 AXLE 6 TIRE	6 3 AXLE SINGLE	7 4 AXLE SINGLE	8 <5AXLE DOUBLE	9 5 AXLE DOUBLE	10 >6AXLE DOUBLE	11 <6AXLE MULTI	12 6 AXLE MULTI	13 >6AXLE MULTI
0:00	15	0	6	2	1	0	0	0	0	6	0	0	0	0
1:00	9	0	2	0	0	0	0	0	0	5	0	2	0	0
2:00	12	0	1	1	2	1	1	0	0	4	0	2	0	0
3:00	13	0	4	0	0	1	0	0	0	6	0	2	0	0
4:00	34	0	19	5	1	4	0	0	0	2	0	3	0	0
5:00	56	0	28	12	4	4	0	0	1	6	0	1	0	0
6:00	93	0	44	26	4	4	3	0	1	10	0	0	1	0
7:00	67	1	26	12	3	7	2	0	0	9	0	5	2	0
8:00	53	0	18	9	3	6	0	0	3	12	0	0	2	0
9:00	62	1	25	9	1	9	0	0	4	10	0	2	1	0
10:00	55	0	12	11	6	7	0	0	5	13	0	1	0	0
11:00	69	0	28	13	2	3	1	0	2	19	0	1	0	0
12:00	68	1	21	14	4	9	2	0	3	13	0	1	0	0
13:00	74	3	27	13	2	5	0	0	3	18	0	2	1	0
14:00	67	0	20	15	5	7	0	0	2	16	0	1	0	1
15:00	98	1	42	27	1	7	1	0	0	18	0	1	0	0
16:00	74	0	37	11	4	4	0	0	1	12	0	3	2	0
17:00	80	1	29	15	2	5	1	0	1	24	0	1	1	0
18:00	66	0	41	6	1	4	0	0	0	11	0	3	0	0
19:00	38	0	22	3	1	2	0	0	0	10	0	0	0	0
20:00	35	0	15	6	2	1	0	0	1	9	0	1	0	0
21:00	42	0	11	3	5	1	0	0	1	20	0	0	1	0
22:00	29	0	12	3	0	0	0	0	0	14	0	0	0	0
23:00	17	0	3	2	1	0	0	0	0	11	0	0	0	0
DAILY TOTALS:	**1226**	**8**	**493**	**218**	**55**	**91**	**11**	**0**	**28**	**278**	**0**	**32**	**11**	**1**
PERCENT TOTALS:		**0.7**	**40.2**	**17.8**	**4.5**	**7.4**	**0.9**	**0**	**2.3**	**22.7**	**0**	**2.6**	**0.9**	**0.1**

WILTEC

Phone: (626) 564-1944 Fax: (626) 564-0969

24-HOUR ADT COUNT SUMMARY

CLIENT: AFSHA CONSULTING
PROJECT: LANCASTER/LEBEC TRAFFIC COUNTS
LOCATION: STATE ROUTE 138 BETWEEN 190TH STREET WEST AND 130TH STREET WEST
DATE: WEDNESDAY DECEMBER 4, 2013

DIRECTION:	EB				
TIME	00-15	15-30	30-45	45-60	HOUR TOTALS
0:00	1	4	1	5	11
1:00	1	4	0	1	6
2:00	1	3	1	0	5
3:00	1	0	1	3	5
4:00	3	2	2	7	14
5:00	5	5	4	7	21
6:00	13	9	13	13	48
7:00	8	12	11	18	49
8:00	18	12	17	14	61
9:00	13	12	25	14	64
10:00	15	22	12	12	61
11:00	16	16	16	16	64
12:00	7	23	16	20	66
13:00	16	16	14	18	64
14:00	29	23	15	28	95
15:00	123	44	45	39	251
16:00	39	34	35	40	148
17:00	34	31	29	17	111
18:00	22	17	17	13	69
19:00	13	6	8	10	37
20:00	7	3	3	7	20
21:00	2	5	4	4	15
22:00	5	4	5	3	17
23:00	6	3	0	4	13
				TOTAL	1315

AM PEAK HOUR	0930-1030
VOLUME	76
PM PEAK HOUR	1500-1600
VOLUME	251

DIRECTION:	WB				
TIME	00-15	15-30	30-45	45-60	HOUR TOTALS
0:00	5	3	3	3	14
1:00	3	0	3	2	8
2:00	4	7	0	2	13
3:00	1	2	4	2	9
4:00	6	5	9	11	31
5:00	15	14	25	46	100
6:00	75	74	34	28	211
7:00	26	28	18	20	92
8:00	12	23	9	21	65
9:00	19	17	22	16	74
10:00	10	17	14	20	61
11:00	17	24	15	12	68
12:00	8	21	23	12	64
13:00	18	14	24	19	75
14:00	20	13	14	20	67
15:00	13	17	22	18	70
16:00	20	19	18	18	75
17:00	17	17	14	22	70
18:00	16	17	10	18	61
19:00	5	8	7	9	29
20:00	9	14	5	7	35
21:00	15	11	10	13	49
22:00	5	8	5	7	25
23:00	3	9	3	1	16
				TOTAL	1382

AM PEAK HOUR	0545-0645
VOLUME	229
PM PEAK HOUR	1530-1630
VOLUME	79

TOTAL BI-DIRECTIONAL VOLUME	2697

WILTEC

Phone: (626) 564-1944 Fax: (626) 564-0969 wiltecusa.com

ALXE CLASSIFICATION SURVEYS

CLIENT: AFSHA CONSULTING
PROJECT: LANCASTER/LEBEC TRAFFIC COUNTS
DATE: WEDNESDAY DECEMBER 4, 2013
LOCATION: STATE ROUTE 138 BETWEEN 190TH STREET WEST AND 130TH STREET WEST
DIRECTION: EASTBOUND

BEGIN TIME	TOTAL	1 BIKES	2 CARS & TLRS	3 2 AXLE LONG	4 BUSES	5 2 AXLE 6 TIRE	6 3 AXLE SINGLE	7 4 AXLE SINGLE	8 <5AXLE DOUBLE	9 5 AXLE DOUBLE	10 >6AXLE DOUBLE	11 <6AXLE MULTI	12 6 AXLE MULTI	13 >6AXLE MULTI
0:00	11	0	7	0	0	1	0	0	0	3	0	0	0	0
1:00	6	0	4	0	0	0	0	0	0	2	0	0	0	0
2:00	5	0	3	0	0	1	0	0	0	1	0	0	0	0
3:00	5	0	2	1	0	1	0	0	0	0	0	0	0	1
4:00	14	0	5	2	1	1	0	0	0	1	0	3	0	1
5:00	21	0	9	5	1	1	0	0	0	3	0	2	0	0
6:00	48	0	29	7	2	5	0	0	0	2	0	3	0	0
7:00	49	0	22	12	0	4	2	0	1	5	0	3	0	0
8:00	61	0	27	12	2	5	3	0	3	7	0	2	0	0
9:00	64	1	23	17	1	5	3	0	3	10	0	1	0	0
10:00	61	0	20	11	1	9	1	0	4	13	0	2	0	0
11:00	64	0	31	16	3	3	3	0	0	5	0	3	0	0
12:00	66	0	31	12	3	7	1	0	2	9	0	1	0	0
13:00	64	0	27	17	5	5	0	0	2	7	0	1	0	0
14:00	95	0	39	23	4	10	1	0	4	10	0	3	1	0
15:00	251	1	128	71	1	20	2	0	3	21	0	3	1	0
16:00	148	2	70	29	4	17	0	0	1	22	0	0	2	1
17:00	111	1	59	21	1	9	0	0	0	18	0	2	0	0
18:00	69	0	32	19	1	6	0	0	2	8	0	1	0	0
19:00	37	0	17	3	0	2	0	0	1	12	0	2	0	0
20:00	20	1	13	2	0	2	0	0	1	1	0	0	0	0
21:00	15	0	7	1	0	2	0	0	1	2	0	2	0	0
22:00	17	0	9	2	0	3	0	0	0	3	0	0	0	0
23:00	13	0	5	4	1	0	0	0	0	3	0	0	0	0
DAILY TOTALS:	**1315**	**6**	**619**	**287**	**31**	**119**	**16**	**0**	**28**	**168**	**0**	**34**	**4**	**3**
PERCENT TOTALS:		**0.5**	**47.1**	**21.8**	**2.54**	**9**	**1.2**	**0**	**2.1**	**12.8**	**0**	**2.6**	**0.3**	**0.2**

WILTEC

Phone: (626) 564-1944 Fax: (626) 564-0969 wiltecusa.com

ALXE CLASSIFICATION SURVEYS

CLIENT: AFSHA CONSULTING
PROJECT: LANCASTER/LEBEC TRAFFIC COUNTS
DATE: WEDNESDAY DECEMBER 4, 2013
LOCATION: STATE ROUTE 138 BETWEEN 190TH STREET WEST AND 130TH STREET WEST
DIRECTION: WESTBOUND

BEGIN TIME	TOTAL	1 BIKES	2 CARS & TLRS	3 2 AXLE LONG	4 BUSES	5 2 AXLE 6 TIRE	6 3 AXLE SINGLE	7 4 AXLE SINGLE	8 <5AXLE DOUBLE	9 5 AXLE DOUBLE	10 >6AXLE DOUBLE	11 <6AXLE MULTI	12 6 AXLE MULTI	13 >6AXLE MULTI
0:00	14	0	4	2	1	0	0	0	2	5	0	0	0	0
1:00	8	0	1	0	1	0	0	0	0	4	0	2	0	0
2:00	13	3	1	1	1	1	1	0	0	3	0	2	0	0
3:00	9	1	3	0	0	0	0	0	0	3	0	2	0	0
4:00	31	0	15	5	1	4	1	0	0	2	0	3	0	0
5:00	100	0	57	22	3	6	0	0	3	8	0	1	0	0
6:00	211	1	121	53	6	17	3	0	2	7	0	1	0	0
7:00	92	1	32	18	4	14	3	0	4	9	0	6	1	0
8:00	65	0	20	12	2	8	0	0	8	11	0	3	1	0
9:00	74	1	27	10	4	12	0	0	7	11	0	2	0	0
10:00	61	1	14	11	5	9	1	0	7	12	0	1	0	0
11:00	68	2	26	14	5	4	0	0	5	11	0	1	0	0
12:00	64	3	17	13	4	11	3	0	3	8	0	2	0	0
13:00	75	0	22	17	4	8	0	0	8	14	0	1	1	0
14:00	67	3	21	16	4	6	0	0	2	14	0	1	0	0
15:00	70	3	25	17	2	5	1	0	5	11	0	1	0	0
16:00	75	1	33	12	4	8	0	0	2	12	0	2	1	0
17:00	70	1	26	12	2	3	1	0	3	20	0	1	1	0
18:00	61	0	35	6	1	4	0	0	1	11	0	3	0	0
19:00	29	0	17	1	2	1	0	0	2	6	0	0	0	0
20:00	35	0	15	4	0	2	0	0	1	12	0	1	0	0
21:00	49	2	18	4	9	3	0	0	2	10	0	0	1	0
22:00	25	1	11	2	0	0	0	0	0	11	0	0	0	0
23:00	16	0	3	2	1	0	0	0	2	8	0	0	0	0
DAILY TOTALS:	**1382**	**24**	**564**	**254**	**66**	**126**	**14**	**0**	**69**	**223**	**0**	**36**	**6**	**0**
PERCENT TOTALS:		**1.7**	**40.8**	**18.4**	**4.8**	**9.1**	**1**	**0**	**5**	**16.1**	**0**	**2.6**	**0.4**	**0**

WILTEC

Phone: (626) 564-1944 Fax: (626) 564-0969

24-HOUR ADT COUNT SUMMARY

CLIENT: AFSHA CONSULTING
PROJECT: LANCASTER/LEBEC TRAFFIC COUNTS
LOCATION: STATE ROUTE 138 BETWEEN 130TH STREET WEST AND 80TH STREET WEST
DATE: WEDNESDAY DECEMBER 4, 2013

DIRECTION:	EB				
TIME	00-15	15-30	30-45	45-60	HOUR TOTALS
0:00	2	4	2	4	12
1:00	2	4	0	0	6
2:00	2	3	1	0	6
3:00	1	0	0	4	5
4:00	4	3	4	6	17
5:00	3	6	7	6	22
6:00	9	15	17	9	50
7:00	13	10	12	18	53
8:00	18	15	18	15	66
9:00	11	17	16	17	61
10:00	19	24	14	12	69
11:00	14	19	14	13	60
12:00	17	16	15	17	65
13:00	19	20	13	15	67
14:00	28	30	20	17	95
15:00	85	74	50	39	248
16:00	41	40	36	40	157
17:00	43	31	31	31	136
18:00	17	16	18	18	69
19:00	16	5	13	9	43
20:00	5	6	2	7	20
21:00	2	6	3	6	17
22:00	3	6	4	5	18
23:00	7	5	1	3	16
				TOTAL	1378

AM PEAK HOUR	0930-1030
VOLUME	76
PM PEAK HOUR	1500-1600
VOLUME	248

DIRECTION:	WB				
TIME	00-15	15-30	30-45	45-60	HOUR TOTALS
0:00	5	5	3	3	16
1:00	3	0	3	3	9
2:00	5	5	0	2	12
3:00	3	1	5	3	12
4:00	5	9	8	11	33
5:00	22	18	41	55	136
6:00	99	52	31	26	208
7:00	30	22	14	24	90
8:00	15	21	12	23	71
9:00	20	14	19	21	74
10:00	12	15	17	18	62
11:00	17	22	12	16	67
12:00	13	23	17	15	68
13:00	22	17	24	24	87
14:00	20	16	13	17	66
15:00	17	22	15	16	70
16:00	19	21	21	21	82
17:00	14	21	17	18	70
18:00	12	15	15	16	58
19:00	6	8	9	8	31
20:00	12	9	4	12	37
21:00	10	11	9	13	43
22:00	6	8	6	2	22
23:00	6	7	2	1	16
				TOTAL	1440

AM PEAK HOUR	0530-0630
VOLUME	247
PM PEAK HOUR	1300-1400
VOLUME	87

TOTAL BI-DIRECTIONAL VOLUME	2818

WILTEC

Phone: (626) 564-1944 Fax: (626) 564-0969 wiltecusa.com

ALXE CLASSIFICATION SURVEYS

CLIENT: AFSHA CONSULTING
PROJECT: LANCASTER/LEBEC TRAFFIC COUNTS
DATE: WEDNESDAY DECEMBER 4, 2013
LOCATION: STATE ROUTE 138 BETWEEN 130th STREET WEST & 80th STREET WEST
DIRECTION: EASTBOUND

BEGIN TIME	TOTAL	1 BIKES	2 CARS & TLRS	3 2 AXLE LONG	4 BUSES	5 2 AXLE 6 TIRE	6 3 AXLE SINGLE	7 4 AXLE SINGLE	8 <5AXLE DOUBLE	9 5 AXLE DOUBLE	10 >6AXLE DOUBLE	11 <6AXLE MULTI	12 6 AXLE MULTI	13 >6AXLE MULTI
0:00	12	0	7	0	0	1	0	0	0	4	0	0	0	0
1:00	6	0	4	0	0	0	0	0	0	2	0	0	0	0
2:00	6	0	4	1	0	0	0	0	0	1	0	0	0	0
3:00	5	0	2	1	0	1	0	0	0	0	0	0	0	1
4:00	17	0	9	2	0	0	0	0	0	2	0	3	0	1
5:00	22	0	9	6	1	1	0	0	0	3	0	2	0	0
6:00	50	1	29	9	2	4	0	0	0	2	0	3	0	0
7:00	53	0	28	11	0	4	2	0	1	4	0	3	0	0
8:00	66	0	34	8	0	7	3	0	2	10	0	2	0	0
9:00	61	1	22	14	1	7	2	0	3	9	0	1	1	0
10:00	69	2	26	14	1	8	1	0	3	12	0	2	0	0
11:00	60	1	30	14	2	3	2	0	2	4	0	2	0	0
12:00	65	0	29	10	3	7	2	0	2	10	0	2	0	0
13:00	67	0	34	14	5	3	0	0	5	6	0	0	0	0
14:00	95	0	42	21	3	11	1	0	4	10	0	2	1	0
15:00	248	3	132	61	1	20	4	0	7	16	0	3	1	0
16:00	157	2	75	31	4	16	0	0	4	22	0	1	2	0
17:00	136	2	81	25	1	9	0	0	0	16	0	2	0	0
18:00	69	0	33	19	1	6	0	0	2	7	0	1	0	0
19:00	43	0	21	6	0	3	0	0	1	11	0	1	0	0
20:00	20	0	12	2	0	2	0	0	1	2	0	1	0	0
21:00	17	0	9	4	0	0	0	0	0	2	0	2	0	0
22:00	18	0	10	3	0	2	0	0	0	3	0	0	0	0
23:00	16	0	9	3	1	0	0	0	0	3	0	0	0	0
DAILY TOTALS:	**1378**	**12**	**691**	**279**	**26**	**115**	**17**	**0**	**37**	**161**	**0**	**33**	**5**	**2**
PERCENT TOTALS:		**0.9**	**50.1**	**20.2**	**1.9**	**8.3**	**1.2**	**0**	**2.7**	**11.7**	**0**	**2.4**	**0.4**	**0.1**

WILTEC

Phone: (626) 564-1944 Fax: (626) 564-0969 wiltecusa.com

ALXE CLASSIFICATION SURVEYS

CLIENT: AFSHA CONSULTING
PROJECT: LANCASTER/LEBEC TRAFFIC COUNTS
DATE: WEDNESDAY DECEMBER 4, 2013
LOCATION: STATE ROUTE 138 BETWEEN 130th STREET WEST & 80th STREET WEST
DIRECTION: WESTBOUND

BEGIN TIME	TOTAL	1 BIKES	2 CARS & TLRS	3 2 AXLE LONG	4 BUSES	5 2 AXLE 6 TIRE	6 3 AXLE SINGLE	7 4 AXLE SINGLE	8 <5AXLE DOUBLE	9 5 AXLE DOUBLE	10 >6AXLE DOUBLE	11 <6AXLE MULTI	12 6 AXLE MULTI	13 >6AXLE MULTI
0:00	16	1	6	1	1	0	0	0	0	7	0	0	0	0
1:00	9	1	2	0	1	0	0	0	0	2	0	3	0	0
2:00	12	1	1	1	1	1	1	0	0	5	0	1	0	0
3:00	12	1	5	0	0	0	0	0	0	4	0	2	0	0
4:00	33	1	18	4	1	4	1	0	0	1	0	3	0	0
5:00	136	2	78	35	3	7	0	0	2	7	0	1	1	0
6:00	208	0	121	48	5	19	1	0	3	9	0	2	0	0
7:00	90	0	32	23	4	6	3	0	4	10	0	7	1	0
8:00	71	0	25	14	0	8	0	0	5	15	0	2	2	0
9:00	74	0	26	17	3	8	1	0	4	12	0	2	1	0
10:00	62	2	17	13	7	5	0	0	5	12	0	1	0	0
11:00	67	1	25	10	1	3	2	0	2	22	0	1	0	0
12:00	68	1	21	19	4	5	3	0	2	11	0	2	0	0
13:00	87	2	33	16	3	8	1	0	3	19	0	1	1	0
14:00	66	1	24	14	4	4	0	0	2	16	0	1	0	0
15:00	70	2	27	18	2	2	1	0	0	16	0	1	1	0
16:00	82	0	35	15	3	5	0	0	2	17	0	3	2	0
17:00	70	0	30	12	3	3	1	0	0	20	0	1	0	0
18:00	58	0	37	6	0	4	0	0	0	10	0	1	0	0
19:00	31	2	18	0	2	2	0	0	1	6	0	0	0	0
20:00	37	0	14	6	1	0	0	0	0	14	0	1	1	0
21:00	43	0	18	5	3	1	0	0	0	16	0	0	0	0
22:00	22	0	7	2	0	0	0	0	0	13	0	0	0	0
23:00	16	2	3	2	1	0	0	0	0	8	0	0	0	0
DAILY TOTALS:	**1440**	**20**	**623**	**281**	**53**	**95**	**15**	**0**	**35**	**272**	**0**	**36**	**10**	**0**
PERCENT TOTALS:		**1.4**	**43.3**	**19.5**	**3.7**	**6.6**	**1**	**0**	**2.4**	**18.9**	**0**	**2.5**	**0.7**	**0**

WILTEC

Phone: (626) 564-1944 Fax: (626) 564-0969

24-HOUR ADT COUNT SUMMARY

CLIENT: AFSHA CONSULTING
PROJECT: LANCASTER/LEBEC TRAFFIC COUNTS
LOCATION: STATE ROUTE 138 BETWEN 80TH STREET WEST AND 30TH STREET WEST
DATE: WEDNESDAY DECEMBER 4, 2013

DIRECTION:	EB				
TIME	00-15	15-30	30-45	45-60	HOUR TOTALS
0:00	3	5	3	3	14
1:00	4	2	1	0	7
2:00	3	2	0	2	7
3:00	1	1	3	3	8
4:00	5	6	14	7	32
5:00	14	19	14	14	61
6:00	23	18	23	22	86
7:00	17	30	22	37	106
8:00	33	24	18	24	99
9:00	24	15	15	31	85
10:00	20	22	20	20	82
11:00	16	20	17	17	70
12:00	19	20	19	14	72
13:00	24	24	20	15	83
14:00	25	32	31	22	110
15:00	35	111	44	61	251
16:00	37	43	35	35	150
17:00	49	35	43	35	162
18:00	24	17	16	21	78
19:00	15	12	7	11	45
20:00	5	9	3	6	23
21:00	4	3	3	4	14
22:00	4	7	3	4	18
23:00	5	3	4	2	14
				TOTAL	1677

AM PEAK HOUR	0715-0815
VOLUME	122
PM PEAK HOUR	1515-1615
VOLUME	253

DIRECTION:	WB				
TIME	00-15	15-30	30-45	45-60	HOUR TOTALS
0:00	5	4	4	3	16
1:00	1	4	2	4	11
2:00	4	5	1	2	12
3:00	2	3	3	2	10
4:00	8	7	12	10	37
5:00	18	19	47	68	152
6:00	76	39	33	27	175
7:00	23	20	18	20	81
8:00	21	11	24	18	74
9:00	12	21	15	17	65
10:00	19	16	22	21	78
11:00	23	17	11	20	71
12:00	16	22	13	20	71
13:00	20	25	26	22	93
14:00	28	19	22	20	89
15:00	19	24	23	27	93
16:00	25	29	25	37	116
17:00	28	37	26	28	119
18:00	32	28	26	18	104
19:00	17	11	13	16	57
20:00	16	12	16	20	64
21:00	9	22	10	8	49
22:00	9	7	11	1	28
23:00	8	10	2	3	23
				TOTAL	1688

AM PEAK HOUR	0530-0630
VOLUME	230
PM PEAK HOUR	1645-1745
VOLUME	128

TOTAL BI-DIRECTIONAL VOLUME	3365

WILTEC

Phone: (626) 564-1944 Fax: (626) 564-0969 wiltecusa.com

ALXE CLASSIFICATION SURVEYS

CLIENT: AFSHA CONSULTING
PROJECT: LANCASTER/LEBEC TRAFFIC COUNTS
DATE: WEDNESDAY DECEMBER 4, 2013
LOCATION: STATE ROUTE 138 BETWEEN 80TH STREET WEST AND 30TH STREET WEST
DIRECTION: EASTBOUND

BEGIN TIME	TOTAL	1 BIKES	2 CARS & TLRS	3 2 AXLE LONG	4 BUSES	5 2 AXLE 6 TIRE	6 3 AXLE SINGLE	7 4 AXLE SINGLE	8 <5AXLE DOUBLE	9 5 AXLE DOUBLE	10 >6AXLE DOUBLE	11 <6AXLE MULTI	12 6 AXLE MULTI	13 >6AXLE MULTI
0:00	14	0	9	1	0	0	0	0	0	4	0	0	0	0
1:00	7	0	5	0	0	0	0	0	0	2	0	0	0	0
2:00	7	0	4	2	0	0	0	0	0	1	0	0	0	0
3:00	8	0	4	1	0	3	0	0	0	0	0	0	0	0
4:00	32	0	16	10	1	3	0	0	0	1	0	1	0	0
5:00	61	0	41	10	0	3	0	0	0	4	0	3	0	0
6:00	86	0	46	20	1	11	0	0	0	4	0	4	0	0
7:00	106	0	69	15	1	9	3	0	2	4	0	3	0	0
8:00	99	0	64	12	1	6	2	0	3	10	0	1	0	0
9:00	85	0	41	22	1	8	3	0	1	7	0	1	1	0
10:00	82	0	35	18	0	6	0	0	4	16	0	3	0	0
11:00	70	0	32	19	3	4	3	0	2	5	0	2	0	0
12:00	72	0	41	12	3	4	2	0	4	4	0	2	0	0
13:00	83	0	42	15	4	6	0	0	2	13	0	1	0	0
14:00	110	1	50	22	4	12	2	0	4	11	0	3	1	0
15:00	251	2	131	60	1	21	5	0	4	22	0	4	1	0
16:00	150	0	66	35	3	10	1	0	6	26	0	0	3	0
17:00	162	1	99	32	1	8	0	0	2	17	0	2	0	0
18:00	78	0	41	19	1	6	0	0	2	8	0	1	0	0
19:00	45	0	21	8	0	2	0	0	1	12	0	1	0	0
20:00	23	0	14	5	0	0	0	0	2	2	0	0	0	0
21:00	14	0	6	2	0	1	0	0	0	2	0	3	0	0
22:00	18	1	10	3	0	3	0	0	0	1	0	0	0	0
23:00	14	0	7	3	1	0	0	0	1	2	0	0	0	0
DAILY TOTALS:	**1677**	**5**	**894**	**346**	**26**	**126**	**21**	**0**	**40**	**178**	**0**	**35**	**6**	**0**
PERCENT TOTALS:		**0.3**	**53.3**	**20.6**	**1.6**	**7.5**	**1.3**	**0**	**2.4**	**10.6**	**0**	**2.1**	**0.4**	**0**

WILTEC

Phone: (626) 564-1944 Fax: (626) 564-0969 wiltecusa.com

ALXE CLASSIFICATION SURVEYS

CLIENT: AFSHA CONSULTING
PROJECT: LANCASTER/LEBEC TRAFFIC COUNTS
DATE: WEDNESDAY DECEMBER 4, 2013
LOCATION: STATE ROUTE 138 BETWEEN 80TH STREET WEST AND 30TH STREET WEST
DIRECTION: WESTBOUND

BEGIN TIME	TOTAL	1 BIKES	2 CARS & TLRS	3 2 AXLE LONG	4 BUSES	5 2 AXLE 6 TIRE	6 3 AXLE SINGLE	7 4 AXLE SINGLE	8 <5AXLE DOUBLE	9 5 AXLE DOUBLE	10 >6AXLE DOUBLE	11 <6AXLE MULTI	12 6 AXLE MULTI	13 >6AXLE MULTI
0:00	16	1	7	2	0	0	0	0	1	5	0	0	0	0
1:00	11	2	3	0	1	0	0	0	0	2	0	3	0	0
2:00	12	0	1	1	1	1	1	0	0	6	0	1	0	0
3:00	10	0	4	0	0	0	0	0	0	4	0	2	0	0
4:00	37	0	19	5	1	3	1	0	0	6	0	2	0	0
5:00	152	0	91	40	4	7	1	0	1	6	0	1	1	0
6:00	175	1	85	38	8	20	3	0	6	13	0	1	0	0
7:00	81	0	30	14	4	7	3	0	4	11	0	6	2	0
8:00	74	0	19	13	3	10	0	0	4	21	0	3	1	0
9:00	65	0	28	11	1	6	2	0	4	10	0	2	1	0
10:00	78	0	25	17	6	6	1	0	5	16	0	2	0	0
11:00	71	1	25	15	3	2	2	0	3	19	0	1	0	0
12:00	71	1	26	12	4	8	2	0	3	13	0	2	0	0
13:00	93	1	40	11	3	8	1	0	3	22	0	3	1	0
14:00	89	0	33	13	6	4	1	0	5	22	0	4	0	1
15:00	93	1	37	26	2	5	2	0	0	16	0	2	2	0
16:00	116	0	63	21	3	9	0	0	3	14	0	1	2	0
17:00	119	3	66	19	3	6	2	0	0	20	0	0	0	0
18:00	104	0	67	14	0	9	0	0	1	11	0	2	0	0
19:00	57	0	34	6	4	4	0	0	1	6	0	2	0	0
20:00	64	0	26	12	2	3	0	0	1	17	0	2	1	0
21:00	49	1	23	8	3	2	0	0	0	11	0	1	0	0
22:00	28	0	11	3	0	1	0	0	0	12	0	1	0	0
23:00	23	0	10	1	1	1	0	0	0	10	0	0	0	0
DAILY TOTALS:	**1688**	**12**	**773**	**302**	**63**	**122**	**22**	**0**	**45**	**293**	**0**	**44**	**11**	**1**
PERCENT TOTALS:		**0.7**	**45.8**	**17.9**	**3.7**	**7.2**	**1.3**	**0**	**2.7**	**17.4**	**0**	**2.6**	**0.7**	**0.1**

WILTEC

Phone: (626) 564-1944 Fax: (626) 564-0969

24-HOUR ADT COUNT SUMMARY

CLIENT: AFSHA CONSULTING
PROJECT: LANCASTER/LEBEC TRAFFIC COUNTS
LOCATION: STATE ROUTE 138 EAST OF STATE ROUTE 14
DATE: WEDNESDAY DECEMBER 4, 2013

DIRECTION:	EB				
TIME	00-15	15-30	30-45	45-60	HOUR TOTALS
0:00	2	0	0	1	3
1:00	2	0	0	1	3
2:00	0	1	0	1	2
3:00	0	0	1	1	2
4:00	2	5	2	7	16
5:00	4	3	0	4	11
6:00	8	6	9	6	29
7:00	6	10	4	9	29
8:00	5	9	4	3	21
9:00	7	4	6	7	24
10:00	5	8	8	5	26
11:00	5	7	4	5	21
12:00	0	9	8	6	23
13:00	9	7	1	6	23
14:00	4	16	12	9	41
15:00	12	22	12	15	61
16:00	16	12	10	11	49
17:00	14	9	7	13	43
18:00	5	5	13	6	29
19:00	4	4	2	1	11
20:00	5	5	1	0	11
21:00	1	2	3	1	7
22:00	3	0	0	1	4
23:00	2	0	0	1	3
				TOTAL	492

AM PEAK HOUR	0630-0730
VOLUME	31
PM PEAK HOUR	1515-1615
VOLUME	65

DIRECTION:	WB				
TIME	00-15	15-30	30-45	45-60	HOUR TOTALS
0:00	1	0	0	4	5
1:00	1	0	1	0	2
2:00	2	1	2	1	6
3:00	1	0	1	4	6
4:00	1	3	5	4	13
5:00	7	11	12	18	48
6:00	11	11	9	11	42
7:00	10	7	5	8	30
8:00	8	6	7	8	29
9:00	4	6	4	6	20
10:00	7	7	6	5	25
11:00	14	10	11	3	38
12:00	6	11	9	5	31
13:00	11	8	12	8	39
14:00	8	7	5	7	27
15:00	8	6	15	12	41
16:00	12	7	8	14	41
17:00	9	10	10	7	36
18:00	7	3	4	6	20
19:00	5	4	3	4	16
20:00	7	6	2	7	22
21:00	3	7	3	6	19
22:00	2	4	2	3	11
23:00	0	2	3	1	6
				TOTAL	573

AM PEAK HOUR	0515-0615
VOLUME	52
PM PEAK HOUR	1530-1630
VOLUME	46

TOTAL BI-DIRECTIONAL VOLUME	1065

WILTEC

Phone: (626) 564-1944 Fax: (626) 564-0969 wiltecusa.com

ALXE CLASSIFICATION SURVEYS

CLIENT: AFSHA CONSULTING
PROJECT: LANCASTER/LEBEC TRAFFIC COUNTS
DATE: WEDNESDAY DECEMBER 4, 2013
LOCATION: STATE ROUTE 138 EAST OF STATE ROUTE 14
DIRECTION: EASTBOUND

BEGIN TIME	TOTAL	1 BIKES	2 CARS & TLRS	3 2 AXLE LONG	4 BUSES	5 2 AXLE 6 TIRE	6 3 AXLE SINGLE	7 4 AXLE SINGLE	8 <5AXLE DOUBLE	9 5 AXLE DOUBLE	10 >6AXLE DOUBLE	11 <6AXLE MULTI	12 6 AXLE MULTI	13 >6AXLE MULTI
0:00	3	0	0	0	0	0	0	0	0	1	0	2	0	0
1:00	3	0	1	1	0	0	0	0	0	0	0	1	0	0
2:00	2	0	1	1	0	0	0	0	0	0	0	0	0	0
3:00	2	0	0	0	0	0	0	0	0	2	0	0	0	0
4:00	16	0	5	3	0	6	0	0	0	1	0	1	0	0
5:00	11	0	5	3	1	0	0	0	0	1	0	1	0	0
6:00	29	0	16	6	1	2	0	0	0	2	0	2	0	0
7:00	29	0	17	7	0	0	1	0	1	0	0	2	1	0
8:00	21	1	9	4	0	2	0	0	1	3	0	0	1	0
9:00	24	1	4	5	0	3	2	0	1	5	0	3	0	0
10:00	26	1	11	4	0	3	0	0	2	4	0	1	0	0
11:00	21	0	8	5	2	2	2	0	0	1	0	1	0	0
12:00	23	1	9	7	0	1	0	0	1	1	0	3	0	0
13:00	23	0	11	1	2	4	0	0	1	3	0	1	0	0
14:00	41	1	11	7	1	3	3	0	4	6	0	5	0	0
15:00	61	2	25	13	0	7	2	0	0	7	0	4	1	0
16:00	49	1	18	9	3	6	0	0	4	7	0	0	1	0
17:00	43	2	19	7	0	5	0	0	0	7	0	3	0	0
18:00	29	1	15	5	0	1	0	0	2	4	0	1	0	0
19:00	11	0	3	2	0	2	0	0	0	3	0	1	0	0
20:00	11	0	5	2	0	0	0	0	0	2	0	2	0	0
21:00	7	0	2	2	0	0	0	0	0	1	0	2	0	0
22:00	4	0	2	0	0	0	0	0	0	2	0	0	0	0
23:00	3	0	1	1	0	0	0	0	0	1	0	0	0	0
DAILY TOTALS:	**492**	**11**	**198**	**95**	**10**	**47**	**10**	**0**	**17**	**64**	**0**	**36**	**4**	**0**
PERCENT TOTALS:		**2.2**	**40.2**	**19.3**	**2**	**9.6**	**2**	**0**	**3.5**	**13**	**0**	**7.3**	**0.8**	**0**

WILTEC

Phone: (626) 564-1944 Fax: (626) 564-0969 wiltecusa.com

ALXE CLASSIFICATION SURVEYS

CLIENT: AFSHA CONSULTING
PROJECT: LANCASTER/LEBEC TRAFFIC COUNTS
DATE: WEDNESDAY DECEMBER 4, 2013
LOCATION: STATE ROUTE 138 EAST OF STATE ROUTE 14
DIRECTION: WESTBOUND

BEGIN TIME	TOTAL	1 BIKES	2 CARS & TLRS	3 2 AXLE LONG	4 BUSES	5 2 AXLE 6 TIRE	6 3 AXLE SINGLE	7 4 AXLE SINGLE	8 <5AXLE DOUBLE	9 5 AXLE DOUBLE	10 >6AXLE DOUBLE	11 <6AXLE MULTI	12 6 AXLE MULTI	13 >6AXLE MULTI
0:00	5	0	2	0	0	1	0	0	0	1	0	1	0	0
1:00	2	0	1	0	1	0	0	0	0	0	0	0	0	0
2:00	6	0	3	0	0	0	0	0	0	2	0	1	0	0
3:00	6	0	2	0	0	0	0	0	1	2	0	1	0	0
4:00	13	0	5	3	1	1	0	0	1	2	0	0	0	0
5:00	48	0	30	6	1	4	0	0	0	5	0	1	1	0
6:00	42	0	20	5	2	12	0	0	0	3	0	0	0	0
7:00	30	0	3	3	1	7	2	0	2	6	0	6	0	0
8:00	29	1	8	3	2	4	0	0	0	9	0	2	0	0
9:00	20	0	5	3	0	5	1	0	3	2	0	1	0	0
10:00	25	1	5	3	1	4	1	0	3	6	0	1	0	0
11:00	38	0	11	9	3	11	1	0	0	3	0	0	0	0
12:00	31	0	9	6	1	5	0	0	0	9	0	1	0	0
13:00	39	0	10	9	1	7	0	0	3	5	0	3	1	0
14:00	27	1	9	4	1	5	0	0	2	3	0	2	0	0
15:00	41	0	22	6	0	4	1	0	0	4	0	2	2	0
16:00	41	0	22	5	3	3	0	0	1	4	1	1	1	0
17:00	36	0	20	8	0	4	0	0	0	4	0	0	0	0
18:00	20	1	8	3	0	1	0	0	0	5	0	2	0	0
19:00	16	0	9	1	0	3	0	0	0	2	0	1	0	0
20:00	22	0	10	3	1	2	0	0	0	4	0	1	1	0
21:00	19	1	10	1	2	1	0	0	0	2	0	2	0	0
22:00	11	2	5	0	1	0	0	0	0	2	0	1	0	0
23:00	6	0	4	0	0	0	0	0	0	2	0	0	0	0
DAILY TOTALS:	**573**	**7**	**233**	**81**	**22**	**84**	**6**	**0**	**16**	**87**	**1**	**30**	**6**	**0**
PERCENT TOTALS:		**1.2**	**40.7**	**14.1**	**3.8**	**14.7**	**1**	**0**	**2.8**	**15.2**	**0.2**	**5.2**	**1**	**0**

Appendix C – PeMS Data

Caltrans PeMS Data

ID	Segment	AM	MD	PM	EV	NT	DAILY
1	SR 14 Mainline VDS 767790 - AVE S	5,880	7,260	4,718	1,750	8,005	27,613
2	SR 14 Mainline VDS 767791 - AVE S	1,416	3,129	4,135	1,494	3,051	13,225
3	I5 Mainline VDS 716023 - TEMPLIN	3,870	12,220	7,060	2,900	6,750	32,800
4	IS Mainline VDS 759942 - TEMPLIN	3,340	10,800	7,460	3,050	7,440	32,090
5	SR 99 Mainline VDS 619972 - N OF RTE 119 UC	4,820	10,588	6,860	2,488	7,952	32,708
6	SR 99 Mainline VDS 629972 - N OF RTE 119 UC	3,178	7,922	7,210	2,035	4,757	25,102
7	SR 99 Mainline VDS 619973 - N OF MCKEE RD	5,674	12,595	10,940	3,173	7,538	39,920
8	SR 99 Mainline VDS 629973 - N OF MCKEE RD	4,618	10,343	7,152	2,365	7,266	31,744
9	SR 99 Mainline VDS 619974 - N OF HOSKING RD	4,701	10,452	7,199	2,386	7,552	32,290
10	SR 99 Mainline VDS 629974 - N OF HOSKING RD	4,390	10,040	9,140	2,511	5,841	31,922
11	SR 99 Mainline VDS 619975 - BERKSHIRE RD	5,244	11,833	10,352	3,041	7,120	37,590
12	SR 99 Mainline VDS 629975 - BERKSHIRE RD	4,606	10,339	7,152	2,386	7,372	31,855
13	SR 99 Mainline VDS 619976 - S OF PANAMA LN	3,794	8,230	7,483	2,104	5,179	26,790
14	SR 99 Mainline VDS 629976 - S OF PANAMA LN	3,881	8,422	5,791	1,896	6,220	26,210
15	SR 99 Mainline VDS 619979 - S OF WHITE LN	7,404	13,239	10,494	3,271	7,687	42,095
16	SR 99 Mainline VDS 629979 - S OF WHITE LN	5,155	11,959	10,221	3,351	7,985	38,671
17	SR 99 Mainline VDS 619980 - S OF PLANZ RD	12,164	19,416	15,610	4,657	11,060	62,907
18	SR 99 Mainline VDS 629980 - S OF PLANZ RD	6,089	14,497	12,798	4,086	9,257	46,727
19	SR 58 Mainline VDS 615856 - W OF VINELAND RD	2,455	5,531	4,345	1,188	3,412	16,931
20	SR 58 Mainline VDS 625856 - W OF VINELAND RD	2,461	5,445	4,239	960	2,217	15,322
21	SR 58 Mainline VDS 615835 - E OF SR 184	2,288	5,115	4,030	1,077	3,171	15,681
22	SR 58 Mainline VDS 625835 - E OF SR 184	2,848	6,562	4,761	1,237	3,268	18,676

Appendix D
SR-138 (HCS 2010) LOS Worksheets – Existing Conditions

Phone: Fax:
E-Mail:

Directional Two-Lane Highway Segment Analysis

Analyst	RC
Agency/Co.	Kimley-Horn
Date Performed	3/21/2014
Analysis Time Period	AM Peak
Highway	SR-138
From/To	I-5 Connector to Gorman Post
Jurisdiction	CALTRANS
Analysis Year	2014
Description	STATE ROUTE 138 HCS ANALYSIS

Input Data

Highway class	Class 1		Peak hour factor, PHF	0.87	
Shoulder width	10.0	ft	% Trucks and buses	36	%
Lane width	12.0	ft	% Trucks crawling	0.0	%
Segment length	1.0	mi	Truck crawl speed	0.0	mi/hr
Terrain type	Level		% Recreational vehicles	21	%
Grade: Length	-	mi	% No-passing zones	20	%
Up/down	-	%	Access point density	1	/mi

Analysis direction volume, Vd 123 veh/h
Opposing direction volume, Vo 105 veh/h

Average Travel Speed

Direction	Analysis(d)		Opposing (o)	
PCE for trucks, ET	1.7		1.8	
PCE for RVs, ER	1.0		1.0	
Heavy-vehicle adj. factor,(note-5) fHV	0.799		0.776	
Grade adj. factor,(note-1) fg	1.00		1.00	
Directional flow rate,(note-2) vi	177	pc/h	156	pc/h

Free-Flow Speed from Field Measurement:

Field measured speed,(note-3) S FM	-	mi/h
Observed total demand,(note-3) V	-	veh/h

Estimated Free-Flow Speed:

Base free-flow speed,(note-3) BFFS	60.0	mi/h
Adj. for lane and shoulder width,(note-3) fLS	0.0	mi/h
Adj. for access point density,(note-3) fA	0.3	mi/h
Free-flow speed, FFSd	59.8	mi/h
Adjustment for no-passing zones, fnp	1.4	mi/h
Average travel speed, ATSd	55.8	mi/h
Percent Free Flow Speed, PFFS	93.4	%

Percent Time-Spent-Following

Direction	Analysis(d)		Opposing (o)	
PCE for trucks, ET	1.1		1.1	
PCE for RVs, ER	1.0		1.0	
Heavy-vehicle adjustment factor, fHV	0.965		0.965	
Grade adjustment factor,(note-1) fg	1.00		1.00	
Directional flow rate,(note-2) vi	146	pc/h	125	pc/h
Base percent time-spent-following,(note-4) BPTSFd	16.4	%		
Adjustment for no-passing zones, fnp	33.1			
Percent time-spent-following, PTSFd	34.2	%		

Level of Service and Other Performance Measures

Level of service, LOS	A	
Volume to capacity ratio, v/c	0.10	
Peak 15-min vehicle-miles of travel, VMT15	35	veh-mi
Peak-hour vehicle-miles of travel, VMT60	123	veh-mi
Peak 15-min total travel time, TT15	0.6	veh-h
Capacity from ATS, CdATS	1319	veh/h
Capacity from PTSF, CdPTSF	1641	veh/h
Directional Capacity	1319	veh/h

Passing Lane Analysis

Total length of analysis segment, Lt	1.0	mi
Length of two-lane highway upstream of the passing lane, Lu	-	mi
Length of passing lane including tapers, Lpl	-	mi
Average travel speed, ATSd (from above)	55.8	mi/h
Percent time-spent-following, PTSFd (from above)	34.2	
Level of service, LOSd (from above)	A	

Average Travel Speed with Passing Lane

Downstream length of two-lane highway within effective length of passing lane for average travel speed, Lde	-	mi
Length of two-lane highway downstream of effective length of the passing lane for average travel speed, Ld	-	mi
Adj. factor for the effect of passing lane on average speed, fpl	-	
Average travel speed including passing lane, ATSpl	-	
Percent free flow speed including passing lane, PFFSpl	0.0	%

Percent Time-Spent-Following with Passing Lane

Downstream length of two-lane highway within effective length of passing lane for percent time-spent-following, Lde	-	mi
Length of two-lane highway downstream of effective length of the passing lane for percent time-spent-following, Ld	-	mi
Adj. factor for the effect of passing lane on percent time-spent-following, fpl	-	
Percent time-spent-following including passing lane, PTSFpl	-	%

Level of Service and Other Performance Measures with Passing Lane

Level of service including passing lane, LOSpl	E	
Peak 15-min total travel time, TT15	-	veh-h

Bicycle Level of Service

Posted speed limit, Sp	55
Percent of segment with occupied on-highway parking	0
Pavement rating, P	3
Flow rate in outside lane, vOL	141.4
Effective width of outside lane, We	40.47
Effective speed factor, St	4.79
Bicycle LOS Score, BLOS	16.65
Bicycle LOS	F

Notes:

1. Note that the adjustment factor for level terrain is 1.00, as level terrain is one of the base conditions. For the purpose of grade adjustment, specific dewngrade segments are treated as level terrain.
2. If vi (vd or vo) >= 1,700 pc/h, terminate analysis-the LOS is F.
3. For the analysis direction only and for v>200 veh/h.
4. For the analysis direction only.
5. Use alternative Exhibit 15-14 if some trucks operate at crawl speeds on a specific downgrade.

Phone: Fax:
E-Mail:

Directional Two-Lane Highway Segment Analysis

Analyst	RC
Agency/Co.	Kimley-Horn
Date Performed	3/21/2014
Analysis Time Period	AM Peak
Highway	SR-138
From/To	Gorman Post Rd/Old Ridge Rt
Jurisdiction	CALTRANS
Analysis Year	2014
Description	STATE ROUTE 138 HCS ANALYSIS

Input Data

Highway class	Class 1		Peak hour factor, PHF	0.79	
Shoulder width	10.0	ft	% Trucks and buses	36	%
Lane width	12.0	ft	% Trucks crawling	0.0	%
Segment length	2.5	mi	Truck crawl speed	0.0	mi/hr
Terrain type	Level		% Recreational vehicles	20	%
Grade: Length	-	mi	% No-passing zones	20	%
Up/down	-	%	Access point density	1	/mi

Analysis direction volume, Vd 88 veh/h
Opposing direction volume, Vo 123 veh/h

Average Travel Speed

Direction	Analysis(d)		Opposing (o)	
PCE for trucks, ET	1.9		1.7	
PCE for RVs, ER	1.0		1.0	
Heavy-vehicle adj. factor,(note-5) fHV	0.755		0.799	
Grade adj. factor,(note-1) fg	1.00		1.00	
Directional flow rate,(note-2) vi	148	pc/h	195	pc/h

Free-Flow Speed from Field Measurement:

Field measured speed,(note-3) S FM	-	mi/h
Observed total demand,(note-3) V	-	veh/h

Estimated Free-Flow Speed:

Base free-flow speed,(note-3) BFFS	60.0	mi/h
Adj. for lane and shoulder width,(note-3) fLS	0.0	mi/h
Adj. for access point density,(note-3) fA	0.3	mi/h
Free-flow speed, FFSd	59.8	mi/h
Adjustment for no-passing zones, fnp	1.8	mi/h
Average travel speed, ATSd	55.3	mi/h
Percent Free Flow Speed, PFFS	92.5	%

Percent Time-Spent-Following

Direction	Analysis(d)		Opposing (o)	
PCE for trucks, ET	1.1		1.1	
PCE for RVs, ER	1.0		1.0	
Heavy-vehicle adjustment factor, fHV	0.965		0.965	
Grade adjustment factor,(note-1) fg	1.00		1.00	
Directional flow rate,(note-2) vi	115	pc/h	161	pc/h

Base percent time-spent-following,(note-4) BPTSFd	13.2	%
Adjustment for no-passing zones, fnp	32.9	
Percent time-spent-following, PTSFd	26.9	%

Level of Service and Other Performance Measures

Level of service, LOS	A	
Volume to capacity ratio, v/c	0.09	
Peak 15-min vehicle-miles of travel, VMT15	70	veh-mi
Peak-hour vehicle-miles of travel, VMT60	220	veh-mi
Peak 15-min total travel time, TT15	1.3	veh-h
Capacity from ATS, CdATS	1358	veh/h
Capacity from PTSF, CdPTSF	1641	veh/h
Directional Capacity	1358	veh/h

Passing Lane Analysis

Total length of analysis segment, Lt	2.5	mi
Length of two-lane highway upstream of the passing lane, Lu	-	mi
Length of passing lane including tapers, Lpl	-	mi
Average travel speed, ATSd (from above)	55.3	mi/h
Percent time-spent-following, PTSFd (from above)	26.9	
Level of service, LOSd (from above)	A	

Average Travel Speed with Passing Lane

Downstream length of two-lane highway within effective length of passing lane for average travel speed, Lde	-	mi
Length of two-lane highway downstream of effective length of the passing lane for average travel speed, Ld	-	mi
Adj. factor for the effect of passing lane on average speed, fpl	-	
Average travel speed including passing lane, ATSpl	-	
Percent free flow speed including passing lane, PFFSpl	0.0	%

Percent Time-Spent-Following with Passing Lane

Downstream length of two-lane highway within effective length of passing lane for percent time-spent-following, Lde	-	mi
Length of two-lane highway downstream of effective length of the passing lane for percent time-spent-following, Ld	-	mi
Adj. factor for the effect of passing lane on percent time-spent-following, fpl	-	
Percent time-spent-following including passing lane, PTSFpl	-	%

Level of Service and Other Performance Measures with Passing Lane

Level of service including passing lane, LOSpl	E	
Peak 15-min total travel time, TT15	-	veh-h

Bicycle Level of Service

Posted speed limit, Sp	55
Percent of segment with occupied on-highway parking	0
Pavement rating, P	3
Flow rate in outside lane, vOL	111.4
Effective width of outside lane, We	44.32
Effective speed factor, St	4.79
Bicycle LOS Score, BLOS	14.90
Bicycle LOS	F

Notes:

1. Note that the adjustment factor for level terrain is 1.00, as level terrain is one of the base conditions. For the purpose of grade adjustment, specific dewngrade segments are treated as level terrain.
2. If vi (vd or vo) >= 1,700 pc/h, terminate analysis-the LOS is F.
3. For the analysis direction only and for v>200 veh/h.
4. For the analysis direction only.
5. Use alternative Exhibit 15-14 if some trucks operate at crawl speeds on a specific downgrade.

Phone: Fax:
E-Mail:

Directional Two-Lane Highway Segment Analysis

Analyst	RC
Agency/Co.	Kimley-Horn
Date Performed	3/21/2014
Analysis Time Period	AM Peak
Highway	SR-138
From/To	Old Ridge Rd/300th St
Jurisdiction	CALTRANS
Analysis Year	2014
Description	STATE ROUTE 138 HCS ANALYSIS

Input Data

Highway class	Class 1		Peak hour factor, PHF	0.72	
Shoulder width	10.0	ft	% Trucks and buses	31	%
Lane width	12.0	ft	% Trucks crawling	0.0	%
Segment length	4.4	mi	Truck crawl speed	0.0	mi/hr
Terrain type	Level		% Recreational vehicles	23	%
Grade: Length	-	mi	% No-passing zones	20	%
Up/down	-	%	Access point density	1	/mi

Analysis direction volume, Vd 50 veh/h
Opposing direction volume, Vo 107 veh/h

Average Travel Speed

Direction	Analysis(d)		Opposing (o)	
PCE for trucks, ET	1.9		1.7	
PCE for RVs, ER	1.0		1.0	
Heavy-vehicle adj. factor,(note-5) fHV	0.782		0.822	
Grade adj. factor,(note-1) fg	1.00		1.00	
Directional flow rate,(note-2) vi	89	pc/h	181	pc/h

Free-Flow Speed from Field Measurement:

Field measured speed,(note-3) S FM	-	mi/h
Observed total demand,(note-3) V	-	veh/h

Estimated Free-Flow Speed:

Base free-flow speed,(note-3) BFFS	60.0	mi/h
Adj. for lane and shoulder width,(note-3) fLS	0.0	mi/h
Adj. for access point density,(note-3) fA	0.3	mi/h
Free-flow speed, FFSd	59.8	mi/h
Adjustment for no-passing zones, fnp	1.7	mi/h
Average travel speed, ATSd	56.0	mi/h
Percent Free Flow Speed, PFFS	93.7	%

Percent Time-Spent-Following

Direction	Analysis(d)		Opposing (o)	
PCE for trucks, ET	1.1		1.1	
PCE for RVs, ER	1.0		1.0	
Heavy-vehicle adjustment factor, fHV	0.970		0.970	
Grade adjustment factor,(note-1) fg	1.00		1.00	
Directional flow rate,(note-2) vi	72	pc/h	153	pc/h
Base percent time-spent-following,(note-4) BPTSFd	8.6	%		
Adjustment for no-passing zones, fnp	28.9			
Percent time-spent-following, PTSFd	17.8	%		

Level of Service and Other Performance Measures

Level of service, LOS	A	
Volume to capacity ratio, v/c	0.05	
Peak 15-min vehicle-miles of travel, VMT15	76	veh-mi
Peak-hour vehicle-miles of travel, VMT60	220	veh-mi
Peak 15-min total travel time, TT15	1.4	veh-h
Capacity from ATS, CdATS	1397	veh/h
Capacity from PTSF, CdPTSF	1649	veh/h
Directional Capacity	1397	veh/h

Passing Lane Analysis

Total length of analysis segment, Lt	4.4	mi
Length of two-lane highway upstream of the passing lane, Lu	-	mi
Length of passing lane including tapers, Lpl	-	mi
Average travel speed, ATSd (from above)	56.0	mi/h
Percent time-spent-following, PTSFd (from above)	17.8	
Level of service, LOSd (from above)	A	

Average Travel Speed with Passing Lane

Downstream length of two-lane highway within effective length of passing lane for average travel speed, Lde	-	mi
Length of two-lane highway downstream of effective length of the passing lane for average travel speed, Ld	-	mi
Adj. factor for the effect of passing lane on average speed, fpl	-	
Average travel speed including passing lane, ATSpl	-	
Percent free flow speed including passing lane, PFFSpl	0.0	%

Percent Time-Spent-Following with Passing Lane

Downstream length of two-lane highway within effective length of passing lane for percent time-spent-following, Lde	-	mi
Length of two-lane highway downstream of effective length of the passing lane for percent time-spent-following, Ld	-	mi
Adj. factor for the effect of passing lane on percent time-spent-following, fpl	-	
Percent time-spent-following including passing lane, PTSFpl	-	%

Level of Service and Other Performance Measures with Passing Lane

Level of service including passing lane, LOSpl	E	
Peak 15-min total travel time, TT15	-	veh-h

Bicycle Level of Service

Posted speed limit, Sp	55
Percent of segment with occupied on-highway parking	0
Pavement rating, P	3
Flow rate in outside lane, vOL	69.4
Effective width of outside lane, We	48.50
Effective speed factor, St	4.79
Bicycle LOS Score, BLOS	8.27
Bicycle LOS	F

Notes:

1. Note that the adjustment factor for level terrain is 1.00, as level terrain is one of the base conditions. For the purpose of grade adjustment, specific dewngrade segments are treated as level terrain.
2. If vi (vd or vo) >= 1,700 pc/h, terminate analysis-the LOS is F.
3. For the analysis direction only and for v>200 veh/h.
4. For the analysis direction only.
5. Use alternative Exhibit 15-14 if some trucks operate at crawl speeds on a specific downgrade.

Phone: Fax:
E-Mail:

Directional Two-Lane Highway Segment Analysis

Analyst	RC
Agency/Co.	Kimley-Horn
Date Performed	3/21/2014
Analysis Time Period	AM Peak
Highway	SR-138
From/To	280th St/270th St
Jurisdiction	CALTRANS
Analysis Year	2014
Description	STATE ROUTE 138 HCS ANALYSIS

Input Data

Highway class	Class 1		Peak hour factor, PHF	0.97	
Shoulder width	10.0	ft	% Trucks and buses	30	%
Lane width	12.0	ft	% Trucks crawling	0.0	%
Segment length	1.3	mi	Truck crawl speed	0.0	mi/hr
Terrain type	Level		% Recreational vehicles	22	%
Grade: Length	-	mi	% No-passing zones	20	%
Up/down	-	%	Access point density	2	/mi

Analysis direction volume, Vd 67 veh/h
Opposing direction volume, Vo 102 veh/h

Average Travel Speed

Direction	Analysis(d)		Opposing (o)	
PCE for trucks, ET	1.9		1.9	
PCE for RVs, ER	1.0		1.0	
Heavy-vehicle adj. factor,(note-5) fHV	0.787		0.787	
Grade adj. factor,(note-1) fg	1.00		1.00	
Directional flow rate,(note-2) vi	88	pc/h	134	pc/h

Free-Flow Speed from Field Measurement:

Field measured speed,(note-3) S FM	-	mi/h
Observed total demand,(note-3) V	-	veh/h

Estimated Free-Flow Speed:

Base free-flow speed,(note-3) BFFS	60.0	mi/h
Adj. for lane and shoulder width,(note-3) fLS	0.0	mi/h
Adj. for access point density,(note-3) fA	0.5	mi/h
Free-flow speed, FFSd	59.5	mi/h
Adjustment for no-passing zones, fnp	1.1	mi/h
Average travel speed, ATSd	56.7	mi/h
Percent Free Flow Speed, PFFS	95.3	%

Percent Time-Spent-Following

Direction	Analysis(d)		Opposing (o)	
PCE for trucks, ET	1.1		1.1	
PCE for RVs, ER	1.0		1.0	
Heavy-vehicle adjustment factor, fHV	0.971		0.971	
Grade adjustment factor,(note-1) fg	1.00		1.00	
Directional flow rate,(note-2) vi	71	pc/h	108	pc/h
Base percent time-spent-following,(note-4) BPTSFd	8.5	%		
Adjustment for no-passing zones, fnp	30.5			
Percent time-spent-following, PTSFd	20.6	%		

Level of Service and Other Performance Measures

Level of service, LOS	A	
Volume to capacity ratio, v/c	0.05	
Peak 15-min vehicle-miles of travel, VMT15	22	veh-mi
Peak-hour vehicle-miles of travel, VMT60	87	veh-mi
Peak 15-min total travel time, TT15	0.4	veh-h
Capacity from ATS, CdATS	1338	veh/h
Capacity from PTSF, CdPTSF	1650	veh/h
Directional Capacity	1338	veh/h

Passing Lane Analysis

Total length of analysis segment, Lt	1.3	mi
Length of two-lane highway upstream of the passing lane, Lu	-	mi
Length of passing lane including tapers, Lpl	-	mi
Average travel speed, ATSd (from above)	56.7	mi/h
Percent time-spent-following, PTSFd (from above)	20.6	
Level of service, LOSd (from above)	A	

Average Travel Speed with Passing Lane

Downstream length of two-lane highway within effective length of passing lane for average travel speed, Lde	-	mi
Length of two-lane highway downstream of effective length of the passing lane for average travel speed, Ld	-	mi
Adj. factor for the effect of passing lane on average speed, fpl	-	
Average travel speed including passing lane, ATSpl	-	
Percent free flow speed including passing lane, PFFSpl	0.0	%

Percent Time-Spent-Following with Passing Lane

Downstream length of two-lane highway within effective length of passing lane for percent time-spent-following, Lde	-	mi
Length of two-lane highway downstream of effective length of the passing lane for percent time-spent-following, Ld	-	mi
Adj. factor for the effect of passing lane on percent time-spent-following, fpl	-	
Percent time-spent-following including passing lane, PTSFpl	-	%

Level of Service and Other Performance Measures with Passing Lane

Level of service including passing lane, LOSpl	E	
Peak 15-min total travel time, TT15	-	veh-h

Bicycle Level of Service

Posted speed limit, Sp	55
Percent of segment with occupied on-highway parking	0
Pavement rating, P	3
Flow rate in outside lane, vOL	69.1
Effective width of outside lane, We	46.63
Effective speed factor, St	4.79
Bicycle LOS Score, BLOS	8.33
Bicycle LOS	F

Notes:

1. Note that the adjustment factor for level terrain is 1.00, as level terrain is one of the base conditions. For the purpose of grade adjustment, specific dewngrade segments are treated as level terrain.
2. If vi (vd or vo) >= 1,700 pc/h, terminate analysis-the LOS is F.
3. For the analysis direction only and for v>200 veh/h.
4. For the analysis direction only.
5. Use alternative Exhibit 15-14 if some trucks operate at crawl speeds on a specific downgrade.

Phone: Fax:
E-Mail:

Directional Two-Lane Highway Segment Analysis

Analyst	RC
Agency/Co.	Kimley-Horn
Date Performed	3/21/2014
Analysis Time Period	AM Peak
Highway	SR-138
From/To	Three Points Rd/245th St
Jurisdiction	CALTRANS
Analysis Year	2014
Description	STATE ROUTE 138 HCS ANALYSIS

Input Data

Highway class	Class 1		Peak hour factor, PHF	0.79	
Shoulder width	10.0	ft	% Trucks and buses	32	%
Lane width	12.0	ft	% Trucks crawling	0.0	%
Segment length	1.6	mi	Truck crawl speed	0.0	mi/hr
Terrain type	Level		% Recreational vehicles	22	%
Grade: Length	-	mi	% No-passing zones	20	%
Up/down	-	%	Access point density	3	/mi

Analysis direction volume, Vd 70 veh/h
Opposing direction volume, Vo 102 veh/h

Average Travel Speed

Direction	Analysis(d)		Opposing (o)	
PCE for trucks, ET	1.9		1.8	
PCE for RVs, ER	1.0		1.0	
Heavy-vehicle adj. factor,(note-5) fHV	0.776		0.796	
Grade adj. factor,(note-1) fg	1.00		1.00	
Directional flow rate,(note-2) vi	114	pc/h	162	pc/h

Free-Flow Speed from Field Measurement:

Field measured speed,(note-3) S FM	-	mi/h
Observed total demand,(note-3) V	-	veh/h

Estimated Free-Flow Speed:

Base free-flow speed,(note-3) BFFS	60.0	mi/h
Adj. for lane and shoulder width,(note-3) fLS	0.0	mi/h
Adj. for access point density,(note-3) fA	0.8	mi/h
Free-flow speed, FFSd	59.3	mi/h
Adjustment for no-passing zones, fnp	1.4	mi/h
Average travel speed, ATSd	55.7	mi/h
Percent Free Flow Speed, PFFS	94.0	%

Percent Time-Spent-Following

Direction	Analysis(d)		Opposing (o)	
PCE for trucks, ET	1.1		1.1	
PCE for RVs, ER	1.0		1.0	
Heavy-vehicle adjustment factor, fHV	0.969		0.969	
Grade adjustment factor,(note-1) fg	1.00		1.00	
Directional flow rate,(note-2) vi	91	pc/h	133	pc/h
Base percent time-spent-following,(note-4) BPTSFd	10.7	%		
Adjustment for no-passing zones, fnp	31.2			
Percent time-spent-following, PTSFd	23.4	%		

Level of Service and Other Performance Measures

Level of service, LOS	A	
Volume to capacity ratio, v/c	0.07	
Peak 15-min vehicle-miles of travel, VMT15	35	veh-mi
Peak-hour vehicle-miles of travel, VMT60	112	veh-mi
Peak 15-min total travel time, TT15	0.6	veh-h
Capacity from ATS, CdATS	1353	veh/h
Capacity from PTSF, CdPTSF	1647	veh/h
Directional Capacity	1353	veh/h

Passing Lane Analysis

Total length of analysis segment, Lt	1.6	mi
Length of two-lane highway upstream of the passing lane, Lu	-	mi
Length of passing lane including tapers, Lpl	-	mi
Average travel speed, ATSd (from above)	55.7	mi/h
Percent time-spent-following, PTSFd (from above)	23.4	
Level of service, LOSd (from above)	A	

Average Travel Speed with Passing Lane

Downstream length of two-lane highway within effective length of passing lane for average travel speed, Lde	-	mi
Length of two-lane highway downstream of effective length of the passing lane for average travel speed, Ld	-	mi
Adj. factor for the effect of passing lane on average speed, fpl	-	
Average travel speed including passing lane, ATSpl	-	
Percent free flow speed including passing lane, PFFSpl	0.0	%

Percent Time-Spent-Following with Passing Lane

Downstream length of two-lane highway within effective length of passing lane for percent time-spent-following, Lde	-	mi
Length of two-lane highway downstream of effective length of the passing lane for percent time-spent-following, Ld	-	mi
Adj. factor for the effect of passing lane on percent time-spent-following, fpl	-	
Percent time-spent-following including passing lane, PTSFpl	-	%

Level of Service and Other Performance Measures with Passing Lane

Level of service including passing lane, LOSpl	E	
Peak 15-min total travel time, TT15	-	veh-h

Bicycle Level of Service

Posted speed limit, Sp	55
Percent of segment with occupied on-highway parking	0
Pavement rating, P	3
Flow rate in outside lane, vOL	88.6
Effective width of outside lane, We	46.30
Effective speed factor, St	4.79
Bicycle LOS Score, BLOS	10.29
Bicycle LOS	F

Notes:

1. Note that the adjustment factor for level terrain is 1.00, as level terrain is one of the base conditions. For the purpose of grade adjustment, specific dewngrade segments are treated as level terrain.
2. If vi (vd or vo) >= 1,700 pc/h, terminate analysis-the LOS is F.
3. For the analysis direction only and for v>200 veh/h.
4. For the analysis direction only.
5. Use alternative Exhibit 15-14 if some trucks operate at crawl speeds on a specific downgrade.

Phone: Fax:
E-Mail:

Directional Two-Lane Highway Segment Analysis

Analyst	RC
Agency/Co.	Kimley-Horn
Date Performed	3/21/2014
Analysis Time Period	AM Peak
Highway	SR-138
From/To	230th St/190th St
Jurisdiction	CALTRANS
Analysis Year	2014
Description	STATE ROUTE 138 HCS ANALYSIS

Input Data

Highway class	Class 1		Peak hour factor, PHF	0.82	
Shoulder width	10.0	ft	% Trucks and buses	33	%
Lane width	12.0	ft	% Trucks crawling	0.0	%
Segment length	1.6	mi	Truck crawl speed	0.0	mi/hr
Terrain type	Level		% Recreational vehicles	22	%
Grade: Length	-	mi	% No-passing zones	20	%
Up/down	-	%	Access point density	2	/mi

Analysis direction volume, Vd 64 veh/h
Opposing direction volume, Vo 93 veh/h

Average Travel Speed

Direction	Analysis(d)		Opposing (o)	
PCE for trucks, ET	1.9		1.8	
PCE for RVs, ER	1.0		1.0	
Heavy-vehicle adj. factor,(note-5) fHV	0.771		0.791	
Grade adj. factor,(note-1) fg	1.00		1.00	
Directional flow rate,(note-2) vi	101	pc/h	143	pc/h

Free-Flow Speed from Field Measurement:

Field measured speed,(note-3) S FM	-	mi/h
Observed total demand,(note-3) V	-	veh/h

Estimated Free-Flow Speed:

Base free-flow speed,(note-3) BFFS	60.0	mi/h
Adj. for lane and shoulder width,(note-3) fLS	0.0	mi/h
Adj. for access point density,(note-3) fA	0.5	mi/h
Free-flow speed, FFSd	59.5	mi/h
Adjustment for no-passing zones, fnp	1.2	mi/h
Average travel speed, ATSd	56.4	mi/h
Percent Free Flow Speed, PFFS	94.8	%

Percent Time-Spent-Following

Direction	Analysis(d)		Opposing (o)	
PCE for trucks, ET	1.1		1.1	
PCE for RVs, ER	1.0		1.0	
Heavy-vehicle adjustment factor, fHV	0.968		0.968	
Grade adjustment factor,(note-1) fg	1.00		1.00	
Directional flow rate,(note-2) vi	81	pc/h	117	pc/h

Base percent time-spent-following,(note-4) BPTSFd	9.6	%
Adjustment for no-passing zones, fnp	30.5	
Percent time-spent-following, PTSFd	22.1	%

Level of Service and Other Performance Measures

Level of service, LOS	A	
Volume to capacity ratio, v/c	0.06	
Peak 15-min vehicle-miles of travel, VMT15	31	veh-mi
Peak-hour vehicle-miles of travel, VMT60	102	veh-mi
Peak 15-min total travel time, TT15	0.5	veh-h
Capacity from ATS, CdATS	1345	veh/h
Capacity from PTSF, CdPTSF	1646	veh/h
Directional Capacity	1345	veh/h

Passing Lane Analysis

Total length of analysis segment, Lt	1.6	mi
Length of two-lane highway upstream of the passing lane, Lu	-	mi
Length of passing lane including tapers, Lpl	-	mi
Average travel speed, ATSd (from above)	56.4	mi/h
Percent time-spent-following, PTSFd (from above)	22.1	
Level of service, LOSd (from above)	A	

Average Travel Speed with Passing Lane

Downstream length of two-lane highway within effective length of passing lane for average travel speed, Lde	-	mi
Length of two-lane highway downstream of effective length of the passing lane for average travel speed, Ld	-	mi
Adj. factor for the effect of passing lane on average speed, fpl	-	
Average travel speed including passing lane, ATSpl	-	
Percent free flow speed including passing lane, PFFSpl	0.0	%

Percent Time-Spent-Following with Passing Lane

Downstream length of two-lane highway within effective length of passing lane for percent time-spent-following, Lde	-	mi
Length of two-lane highway downstream of effective length of the passing lane for percent time-spent-following, Ld	-	mi
Adj. factor for the effect of passing lane on percent time-spent-following, fpl	-	
Percent time-spent-following including passing lane, PTSFpl	-	%

Level of Service and Other Performance Measures with Passing Lane

Level of service including passing lane, LOSpl	E	
Peak 15-min total travel time, TT15	-	veh-h

Bicycle Level of Service

Posted speed limit, Sp	55
Percent of segment with occupied on-highway parking	0
Pavement rating, P	3
Flow rate in outside lane, vOL	78.0
Effective width of outside lane, We	46.96
Effective speed factor, St	4.79
Bicycle LOS Score, BLOS	10.78
Bicycle LOS	F

Notes:

1. Note that the adjustment factor for level terrain is 1.00, as level terrain is one of the base conditions. For the purpose of grade adjustment, specific dewngrade segments are treated as level terrain.
2. If vi (vd or vo) >= 1,700 pc/h, terminate analysis-the LOS is F.
3. For the analysis direction only and for v>200 veh/h.
4. For the analysis direction only.
5. Use alternative Exhibit 15-14 if some trucks operate at crawl speeds on a specific downgrade.

Phone: Fax:
E-Mail:

Directional Two-Lane Highway Segment Analysis

Analyst	RC
Agency/Co.	Kimley-Horn
Date Performed	3/21/2014
Analysis Time Period	AM Peak
Highway	SR-138
From/To	190th St/130th St
Jurisdiction	CALTRANS
Analysis Year	2014
Description	STATE ROUTE 138 HCS ANALYSIS

Input Data

Highway class	Class 1		Peak hour factor, PHF	0.72	
Shoulder width	10.0	ft	% Trucks and buses	31	%
Lane width	12.0	ft	% Trucks crawling	0.0	%
Segment length	6.0	mi	Truck crawl speed	0.0	mi/hr
Terrain type	Level		% Recreational vehicles	24	%
Grade: Length	-	mi	% No-passing zones	20	%
Up/down	-	%	Access point density	2	/mi

Analysis direction volume, Vd 42 veh/h
Opposing direction volume, Vo 229 veh/h

Average Travel Speed

Direction	Analysis(d)		Opposing (o)	
PCE for trucks, ET	1.9		1.4	
PCE for RVs, ER	1.0		1.0	
Heavy-vehicle adj. factor,(note-5) fHV	0.782		0.890	
Grade adj. factor,(note-1) fg	1.00		1.00	
Directional flow rate,(note-2) vi	75	pc/h	357	pc/h

Free-Flow Speed from Field Measurement:

Field measured speed,(note-3) S FM	-	mi/h
Observed total demand,(note-3) V	-	veh/h

Estimated Free-Flow Speed:

Base free-flow speed,(note-3) BFFS	60.0	mi/h
Adj. for lane and shoulder width,(note-3) fLS	0.0	mi/h
Adj. for access point density,(note-3) fA	0.5	mi/h
Free-flow speed, FFSd	59.5	mi/h
Adjustment for no-passing zones, fnp	1.5	mi/h
Average travel speed, ATSd	54.7	mi/h
Percent Free Flow Speed, PFFS	91.9	%

Percent Time-Spent-Following

Direction	Analysis(d)		Opposing (o)	
PCE for trucks, ET	1.1		1.1	
PCE for RVs, ER	1.0		1.0	
Heavy-vehicle adjustment factor, fHV	0.970		0.970	
Grade adjustment factor,(note-1) fg	1.00		1.00	
Directional flow rate,(note-2) vi	60	pc/h	328	pc/h

Base percent time-spent-following,(note-4) BPTSFd	8.6	%
Adjustment for no-passing zones, fnp	23.6	
Percent time-spent-following, PTSFd	12.2	%

Level of Service and Other Performance Measures

Level of service, LOS	B	
Volume to capacity ratio, v/c	0.04	
Peak 15-min vehicle-miles of travel, VMT15	87	veh-mi
Peak-hour vehicle-miles of travel, VMT60	252	veh-mi
Peak 15-min total travel time, TT15	1.6	veh-h
Capacity from ATS, CdATS	1513	veh/h
Capacity from PTSF, CdPTSF	1649	veh/h
Directional Capacity	1513	veh/h

Passing Lane Analysis

Total length of analysis segment, Lt	6.0	mi
Length of two-lane highway upstream of the passing lane, Lu	-	mi
Length of passing lane including tapers, Lpl	-	mi
Average travel speed, ATSd (from above)	54.7	mi/h
Percent time-spent-following, PTSFd (from above)	12.2	
Level of service, LOSd (from above)	B	

Average Travel Speed with Passing Lane

Downstream length of two-lane highway within effective length of passing lane for average travel speed, Lde	-	mi
Length of two-lane highway downstream of effective length of the passing lane for average travel speed, Ld	-	mi
Adj. factor for the effect of passing lane on average speed, fpl	-	
Average travel speed including passing lane, ATSpl	-	
Percent free flow speed including passing lane, PFFSpl	0.0	%

Percent Time-Spent-Following with Passing Lane

Downstream length of two-lane highway within effective length of passing lane for percent time-spent-following, Lde	-	mi
Length of two-lane highway downstream of effective length of the passing lane for percent time-spent-following, Ld	-	mi
Adj. factor for the effect of passing lane on percent time-spent-following, fpl	-	
Percent time-spent-following including passing lane, PTSFpl	-	%

Level of Service and Other Performance Measures with Passing Lane

Level of service including passing lane, LOSpl	E	
Peak 15-min total travel time, TT15	-	veh-h

Bicycle Level of Service

Posted speed limit, Sp	55
Percent of segment with occupied on-highway parking	0
Pavement rating, P	3
Flow rate in outside lane, vOL	58.3
Effective width of outside lane, We	49.38
Effective speed factor, St	4.79
Bicycle LOS Score, BLOS	7.75
Bicycle LOS	F

Notes:

1. Note that the adjustment factor for level terrain is 1.00, as level terrain is one of the base conditions. For the purpose of grade adjustment, specific dewngrade segments are treated as level terrain.
2. If vi (vd or vo) >= 1,700 pc/h, terminate analysis-the LOS is F.
3. For the analysis direction only and for v>200 veh/h.
4. For the analysis direction only.
5. Use alternative Exhibit 15-14 if some trucks operate at crawl speeds on a specific downgrade.

Phone: Fax:
E-Mail:

Directional Two-Lane Highway Segment Analysis

Analyst	RC
Agency/Co.	Kimley-Horn
Date Performed	3/21/2014
Analysis Time Period	AM Peak
Highway	SR-138
From/To	130th St/80th St
Jurisdiction	CALTRANS
Analysis Year	2014
Description	STATE ROUTE 138 HCS ANALYSIS

Input Data

Highway class	Class 1		Peak hour factor, PHF	0.85	
Shoulder width	10.0	ft	% Trucks and buses	29	%
Lane width	12.0	ft	% Trucks crawling	0.0	%
Segment length	5.0	mi	Truck crawl speed	0.0	mi/hr
Terrain type	Level		% Recreational vehicles	23	%
Grade: Length	-	mi	% No-passing zones	20	%
Up/down	-	%	Access point density	3	/mi

Analysis direction volume, Vd 37 veh/h
Opposing direction volume, Vo 247 veh/h

Average Travel Speed

Direction	Analysis(d)		Opposing (o)	
PCE for trucks, ET	1.9		1.4	
PCE for RVs, ER	1.0		1.0	
Heavy-vehicle adj. factor,(note-5) fHV	0.793		0.896	
Grade adj. factor,(note-1) fg	1.00		1.00	
Directional flow rate,(note-2) vi	55	pc/h	324	pc/h

Free-Flow Speed from Field Measurement:

Field measured speed,(note-3) S FM	-	mi/h
Observed total demand,(note-3) V	-	veh/h

Estimated Free-Flow Speed:

Base free-flow speed,(note-3) BFFS	60.0	mi/h
Adj. for lane and shoulder width,(note-3) fLS	0.0	mi/h
Adj. for access point density,(note-3) fA	0.8	mi/h
Free-flow speed, FFSd	59.3	mi/h
Adjustment for no-passing zones, fnp	1.6	mi/h
Average travel speed, ATSd	54.8	mi/h
Percent Free Flow Speed, PFFS	92.4	%

Percent Time-Spent-Following

Direction	Analysis(d)		Opposing (o)	
PCE for trucks, ET	1.1		1.1	
PCE for RVs, ER	1.0		1.0	
Heavy-vehicle adjustment factor, fHV	0.972		0.972	
Grade adjustment factor,(note-1) fg	1.00		1.00	
Directional flow rate,(note-2) vi	45	pc/h	299	pc/h
Base percent time-spent-following,(note-4) BPTSFd	6.4	%		
Adjustment for no-passing zones, fnp	22.8			
Percent time-spent-following, PTSFd	9.4	%		

Level of Service and Other Performance Measures

Level of service, LOS	B	
Volume to capacity ratio, v/c	0.03	
Peak 15-min vehicle-miles of travel, VMT15	54	veh-mi
Peak-hour vehicle-miles of travel, VMT60	185	veh-mi
Peak 15-min total travel time, TT15	1.0	veh-h
Capacity from ATS, CdATS	1523	veh/h
Capacity from PTSF, CdPTSF	1652	veh/h
Directional Capacity	1523	veh/h

Passing Lane Analysis

Total length of analysis segment, Lt	5.0	mi
Length of two-lane highway upstream of the passing lane, Lu	-	mi
Length of passing lane including tapers, Lpl	-	mi
Average travel speed, ATSd (from above)	54.8	mi/h
Percent time-spent-following, PTSFd (from above)	9.4	
Level of service, LOSd (from above)	B	

Average Travel Speed with Passing Lane

Downstream length of two-lane highway within effective length of passing lane for average travel speed, Lde	-	mi
Length of two-lane highway downstream of effective length of the passing lane for average travel speed, Ld	-	mi
Adj. factor for the effect of passing lane on average speed, fpl	-	
Average travel speed including passing lane, ATSpl	-	
Percent free flow speed including passing lane, PFFSpl	0.0	%

Percent Time-Spent-Following with Passing Lane

Downstream length of two-lane highway within effective length of passing lane for percent time-spent-following, Lde	-	mi
Length of two-lane highway downstream of effective length of the passing lane for percent time-spent-following, Ld	-	mi
Adj. factor for the effect of passing lane on percent time-spent-following, fpl	-	
Percent time-spent-following including passing lane, PTSFpl	-	%

Level of Service and Other Performance Measures with Passing Lane

Level of service including passing lane, LOSpl	E	
Peak 15-min total travel time, TT15	-	veh-h

Bicycle Level of Service

Posted speed limit, Sp	55
Percent of segment with occupied on-highway parking	0
Pavement rating, P	3
Flow rate in outside lane, vOL	43.5
Effective width of outside lane, We	49.93
Effective speed factor, St	4.79
Bicycle LOS Score, BLOS	5.70
Bicycle LOS	F

Notes:

1. Note that the adjustment factor for level terrain is 1.00, as level terrain is one of the base conditions. For the purpose of grade adjustment, specific dewngrade segments are treated as level terrain.
2. If vi (vd or vo) >= 1,700 pc/h, terminate analysis-the LOS is F.
3. For the analysis direction only and for v>200 veh/h.
4. For the analysis direction only.
5. Use alternative Exhibit 15-14 if some trucks operate at crawl speeds on a specific downgrade.

Phone: Fax:
E-Mail:

Directional Two-Lane Highway Segment Analysis

Analyst	RC
Agency/Co.	Kimley-Horn
Date Performed	3/21/2014
Analysis Time Period	AM Peak
Highway	SR-138
From/To	80th St/30th St
Jurisdiction	CALTRANS
Analysis Year	2014
Description	STATE ROUTE 138 HCS ANALYSIS

Input Data

Highway class	Class 1		Peak hour factor, PHF	0.94	
Shoulder width	10.0	ft	% Trucks and buses	28	%
Lane width	12.0	ft	% Trucks crawling	0.0	%
Segment length	5.0	mi	Truck crawl speed	0.0	mi/hr
Terrain type	Level		% Recreational vehicles	22	%
Grade: Length	-	mi	% No-passing zones	20	%
Up/down	-	%	Access point density	3	/mi

Analysis direction volume, Vd 69 veh/h
Opposing direction volume, Vo 230 veh/h

Average Travel Speed

Direction	Analysis(d)		Opposing (o)	
PCE for trucks, ET	1.9		1.5	
PCE for RVs, ER	1.0		1.0	
Heavy-vehicle adj. factor,(note-5) fHV	0.799		0.877	
Grade adj. factor,(note-1) fg	1.00		1.00	
Directional flow rate,(note-2) vi	92	pc/h	279	pc/h

Free-Flow Speed from Field Measurement:

Field measured speed,(note-3) S FM	-	mi/h
Observed total demand,(note-3) V	-	veh/h

Estimated Free-Flow Speed:

Base free-flow speed,(note-3) BFFS	60.0	mi/h
Adj. for lane and shoulder width,(note-3) fLS	0.0	mi/h
Adj. for access point density,(note-3) fA	0.8	mi/h
Free-flow speed, FFSd	59.3	mi/h
Adjustment for no-passing zones, fnp	1.7	mi/h
Average travel speed, ATSd	54.7	mi/h
Percent Free Flow Speed, PFFS	92.3	%

Percent Time-Spent-Following

Direction	Analysis(d)		Opposing (o)	
PCE for trucks, ET	1.1		1.1	
PCE for RVs, ER	1.0		1.0	
Heavy-vehicle adjustment factor, fHV	0.973		0.973	
Grade adjustment factor,(note-1) fg	1.00		1.00	
Directional flow rate,(note-2) vi	75	pc/h	252	pc/h

Base percent time-spent-following,(note-4) BPTSFd	9.6	%
Adjustment for no-passing zones, fnp	27.4	
Percent time-spent-following, PTSFd	15.9	%

Level of Service and Other Performance Measures

Level of service, LOS	B	
Volume to capacity ratio, v/c	0.05	
Peak 15-min vehicle-miles of travel, VMT15	92	veh-mi
Peak-hour vehicle-miles of travel, VMT60	345	veh-mi
Peak 15-min total travel time, TT15	1.7	veh-h
Capacity from ATS, CdATS	1528	veh/h
Capacity from PTSF, CdPTSF	1654	veh/h
Directional Capacity	1528	veh/h

Passing Lane Analysis

Total length of analysis segment, Lt	5.0	mi
Length of two-lane highway upstream of the passing lane, Lu	-	mi
Length of passing lane including tapers, Lpl	-	mi
Average travel speed, ATSd (from above)	54.7	mi/h
Percent time-spent-following, PTSFd (from above)	15.9	
Level of service, LOSd (from above)	B	

Average Travel Speed with Passing Lane

Downstream length of two-lane highway within effective length of passing lane for average travel speed, Lde	-	mi
Length of two-lane highway downstream of effective length of the passing lane for average travel speed, Ld	-	mi
Adj. factor for the effect of passing lane on average speed, fpl	-	
Average travel speed including passing lane, ATSpl	-	
Percent free flow speed including passing lane, PFFSpl	0.0	%

Percent Time-Spent-Following with Passing Lane

Downstream length of two-lane highway within effective length of passing lane for percent time-spent-following, Lde	-	mi
Length of two-lane highway downstream of effective length of the passing lane for percent time-spent-following, Ld	-	mi
Adj. factor for the effect of passing lane on percent time-spent-following, fpl	-	
Percent time-spent-following including passing lane, PTSFpl	-	%

Level of Service and Other Performance Measures with Passing Lane

Level of service including passing lane, LOSpl	E	
Peak 15-min total travel time, TT15	-	veh-h

Bicycle Level of Service

Posted speed limit, Sp	55
Percent of segment with occupied on-highway parking	0
Pavement rating, P	3
Flow rate in outside lane, vOL	73.4
Effective width of outside lane, We	46.41
Effective speed factor, St	4.79
Bicycle LOS Score, BLOS	6.87
Bicycle LOS	F

Notes:

1. Note that the adjustment factor for level terrain is 1.00, as level terrain is one of the base conditions. For the purpose of grade adjustment, specific dewngrade segments are treated as level terrain.
2. If vi (vd or vo) >= 1,700 pc/h, terminate analysis-the LOS is F.
3. For the analysis direction only and for v>200 veh/h.
4. For the analysis direction only.
5. Use alternative Exhibit 15-14 if some trucks operate at crawl speeds on a specific downgrade.

Phone: Fax:
E-Mail:

Directional Two-Lane Highway Segment Analysis

Analyst	RC
Agency/Co.	Kimley-Horn
Date Performed	3/21/2014
Analysis Time Period	AM Peak
Highway	SR-138
From/To	30th St/Route 14
Jurisdiction	CALTRANS
Analysis Year	2014
Description	STATE ROUTE 138 HCS ANALYSIS

Input Data

Highway class	Class 1		Peak hour factor, PHF	0.89	
Shoulder width	10.0	ft	% Trucks and buses	38	%
Lane width	12.0	ft	% Trucks crawling	0.0	%
Segment length	0.7	mi	Truck crawl speed	0.0	mi/hr
Terrain type	Level		% Recreational vehicles	20	%
Grade: Length	-	mi	% No-passing zones	20	%
Up/down	-	%	Access point density	1	/mi

Analysis direction volume, Vd 15 veh/h
Opposing direction volume, Vo 52 veh/h

Average Travel Speed

Direction	Analysis(d)		Opposing (o)	
PCE for trucks, ET	1.9		1.9	
PCE for RVs, ER	1.0		1.0	
Heavy-vehicle adj. factor,(note-5) fHV	0.745		0.745	
Grade adj. factor,(note-1) fg	1.00		1.00	
Directional flow rate,(note-2) vi	23	pc/h	78	pc/h

Free-Flow Speed from Field Measurement:

Field measured speed,(note-3) S FM	-	mi/h
Observed total demand,(note-3) V	-	veh/h

Estimated Free-Flow Speed:

Base free-flow speed,(note-3) BFFS	60.0	mi/h
Adj. for lane and shoulder width,(note-3) fLS	0.0	mi/h
Adj. for access point density,(note-3) fA	0.3	mi/h
Free-flow speed, FFSd	59.8	mi/h
Adjustment for no-passing zones, fnp	0.7	mi/h
Average travel speed, ATSd	58.3	mi/h
Percent Free Flow Speed, PFFS	97.5	%

Percent Time-Spent-Following

Direction	Analysis(d)		Opposing (o)	
PCE for trucks, ET	1.1		1.1	
PCE for RVs, ER	1.0		1.0	
Heavy-vehicle adjustment factor, fHV	0.963		0.963	
Grade adjustment factor,(note-1) fg	1.00		1.00	
Directional flow rate,(note-2) vi	17	pc/h	61	pc/h
Base percent time-spent-following,(note-4) BPTSFd	2.2	%		
Adjustment for no-passing zones, fnp	27.3			
Percent time-spent-following, PTSFd	8.1	%		

Level of Service and Other Performance Measures

Level of service, LOS	A	
Volume to capacity ratio, v/c	0.01	
Peak 15-min vehicle-miles of travel, VMT15	3	veh-mi
Peak-hour vehicle-miles of travel, VMT60	10	veh-mi
Peak 15-min total travel time, TT15	0.1	veh-h
Capacity from ATS, CdATS	1267	veh/h
Capacity from PTSF, CdPTSF	1638	veh/h
Directional Capacity	1267	veh/h

Passing Lane Analysis

Total length of analysis segment, Lt	0.7	mi
Length of two-lane highway upstream of the passing lane, Lu	-	mi
Length of passing lane including tapers, Lpl	-	mi
Average travel speed, ATSd (from above)	58.3	mi/h
Percent time-spent-following, PTSFd (from above)	8.1	
Level of service, LOSd (from above)	A	

Average Travel Speed with Passing Lane

Downstream length of two-lane highway within effective length of passing lane for average travel speed, Lde	-	mi
Length of two-lane highway downstream of effective length of the passing lane for average travel speed, Ld	-	mi
Adj. factor for the effect of passing lane on average speed, fpl	-	
Average travel speed including passing lane, ATSpl	-	
Percent free flow speed including passing lane, PFFSpl	0.0	%

Percent Time-Spent-Following with Passing Lane

Downstream length of two-lane highway within effective length of passing lane for percent time-spent-following, Lde	-	mi
Length of two-lane highway downstream of effective length of the passing lane for percent time-spent-following, Ld	-	mi
Adj. factor for the effect of passing lane on percent time-spent-following, fpl	-	
Percent time-spent-following including passing lane, PTSFpl	-	%

Level of Service and Other Performance Measures with Passing Lane

Level of service including passing lane, LOSpl	E	
Peak 15-min total travel time, TT15	-	veh-h

Bicycle Level of Service

Posted speed limit, Sp	55
Percent of segment with occupied on-highway parking	0
Pavement rating, P	3
Flow rate in outside lane, vOL	16.9
Effective width of outside lane, We	52.35
Effective speed factor, St	4.79
Bicycle LOS Score, BLOS	11.99
Bicycle LOS	F

Notes:

1. Note that the adjustment factor for level terrain is 1.00, as level terrain is one of the base conditions. For the purpose of grade adjustment, specific dewngrade segments are treated as level terrain.
2. If vi (vd or vo) >= 1,700 pc/h, terminate analysis-the LOS is F.
3. For the analysis direction only and for v>200 veh/h.
4. For the analysis direction only.
5. Use alternative Exhibit 15-14 if some trucks operate at crawl speeds on a specific downgrade.

Phone: Fax:
E-Mail:

Directional Two-Lane Highway Segment Analysis

Analyst	RC
Agency/Co.	Kimley-Horn
Date Performed	3/21/2014
Analysis Time Period	PM Peak
Highway	SR-138
From/To	I-5 Connector to Gorman Post
Jurisdiction	CALTRANS
Analysis Year	2014
Description	STATE ROUTE 138 HCS ANALYSIS

Input Data

Highway class	Class 1		Peak hour factor, PHF	0.86	
Shoulder width	10.0	ft	% Trucks and buses	36	%
Lane width	12.0	ft	% Trucks crawling	0.0	%
Segment length	1.0	mi	Truck crawl speed	0.0	mi/hr
Terrain type	Level		% Recreational vehicles	21	%
Grade: Length	-	mi	% No-passing zones	20	%
Up/down	-	%	Access point density	1	/mi

Analysis direction volume, Vd 149 veh/h
Opposing direction volume, Vo 96 veh/h

Average Travel Speed

Direction	Analysis(d)		Opposing (o)	
PCE for trucks, ET	1.6		1.9	
PCE for RVs, ER	1.0		1.0	
Heavy-vehicle adj. factor,(note-5) fHV	0.822		0.755	
Grade adj. factor,(note-1) fg	1.00		1.00	
Directional flow rate,(note-2) vi	211	pc/h	148	pc/h

Free-Flow Speed from Field Measurement:		
Field measured speed,(note-3) S FM	-	mi/h
Observed total demand,(note-3) V	-	veh/h
Estimated Free-Flow Speed:		
Base free-flow speed,(note-3) BFFS	60.0	mi/h
Adj. for lane and shoulder width,(note-3) fLS	0.0	mi/h
Adj. for access point density,(note-3) fA	0.3	mi/h
Free-flow speed, FFSd	59.8	mi/h
Adjustment for no-passing zones, fnp	1.3	mi/h
Average travel speed, ATSd	55.7	mi/h
Percent Free Flow Speed, PFFS	93.2	%

Percent Time-Spent-Following

Direction	Analysis(d)		Opposing (o)	
PCE for trucks, ET	1.1		1.1	
PCE for RVs, ER	1.0		1.0	
Heavy-vehicle adjustment factor, fHV	0.965		0.965	
Grade adjustment factor,(note-1) fg	1.00		1.00	
Directional flow rate,(note-2) vi	179	pc/h	116	pc/h
Base percent time-spent-following,(note-4) BPTSFd	19.6	%		
Adjustment for no-passing zones, fnp	32.9			
Percent time-spent-following, PTSFd	39.6	%		

Level of Service and Other Performance Measures

Level of service, LOS	B	
Volume to capacity ratio, v/c	0.12	
Peak 15-min vehicle-miles of travel, VMT15	43	veh-mi
Peak-hour vehicle-miles of travel, VMT60	149	veh-mi
Peak 15-min total travel time, TT15	0.8	veh-h
Capacity from ATS, CdATS	1319	veh/h
Capacity from PTSF, CdPTSF	1641	veh/h
Directional Capacity	1319	veh/h

Passing Lane Analysis

Total length of analysis segment, Lt	1.0	mi
Length of two-lane highway upstream of the passing lane, Lu	-	mi
Length of passing lane including tapers, Lpl	-	mi
Average travel speed, ATSd (from above)	55.7	mi/h
Percent time-spent-following, PTSFd (from above)	39.6	
Level of service, LOSd (from above)	B	

Average Travel Speed with Passing Lane

Downstream length of two-lane highway within effective length of passing lane for average travel speed, Lde	-	mi
Length of two-lane highway downstream of effective length of the passing lane for average travel speed, Ld	-	mi
Adj. factor for the effect of passing lane on average speed, fpl	-	
Average travel speed including passing lane, ATSpl	-	
Percent free flow speed including passing lane, PFFSpl	0.0	%

Percent Time-Spent-Following with Passing Lane

Downstream length of two-lane highway within effective length of passing lane for percent time-spent-following, Lde	-	mi
Length of two-lane highway downstream of effective length of the passing lane for percent time-spent-following, Ld	-	mi
Adj. factor for the effect of passing lane on percent time-spent-following, fpl	-	
Percent time-spent-following including passing lane, PTSFpl	-	%

Level of Service and Other Performance Measures with Passing Lane

Level of service including passing lane, LOSpl	E	
Peak 15-min total travel time, TT15	-	veh-h

Bicycle Level of Service

Posted speed limit, Sp	55
Percent of segment with occupied on-highway parking	0
Pavement rating, P	3
Flow rate in outside lane, vOL	173.3
Effective width of outside lane, We	37.61
Effective speed factor, St	4.79
Bicycle LOS Score, BLOS	17.88
Bicycle LOS	F

Notes:

1. Note that the adjustment factor for level terrain is 1.00, as level terrain is one of the base conditions. For the purpose of grade adjustment, specific dewngrade segments are treated as level terrain.
2. If vi (vd or vo) >= 1,700 pc/h, terminate analysis-the LOS is F.
3. For the analysis direction only and for v>200 veh/h.
4. For the analysis direction only.
5. Use alternative Exhibit 15-14 if some trucks operate at crawl speeds on a specific downgrade.

Phone: Fax:
E-Mail:

Directional Two-Lane Highway Segment Analysis

Analyst	RC
Agency/Co.	Kimley-Horn
Date Performed	3/21/2014
Analysis Time Period	PM Peak
Highway	SR-138
From/To	Gorman Post Rd/Old Ridge Rt
Jurisdiction	CALTRANS
Analysis Year	2014
Description	STATE ROUTE 138 HCS ANALYSIS

Input Data

Highway class	Class 1		Peak hour factor, PHF	0.90	
Shoulder width	10.0	ft	% Trucks and buses	36	%
Lane width	12.0	ft	% Trucks crawling	0.0	%
Segment length	2.5	mi	Truck crawl speed	0.0	mi/hr
Terrain type	Level		% Recreational vehicles	20	%
Grade: Length	-	mi	% No-passing zones	20	%
Up/down	-	%	Access point density	1	/mi

Analysis direction volume, Vd 137 veh/h
Opposing direction volume, Vo 156 veh/h

Average Travel Speed

Direction	Analysis(d)		Opposing (o)	
PCE for trucks, ET	1.7		1.6	
PCE for RVs, ER	1.0		1.0	
Heavy-vehicle adj. factor,(note-5) fHV	0.799		0.822	
Grade adj. factor,(note-1) fg	1.00		1.00	
Directional flow rate,(note-2) vi	191	pc/h	211	pc/h

Free-Flow Speed from Field Measurement:

Field measured speed,(note-3) S FM	-	mi/h
Observed total demand,(note-3) V	-	veh/h

Estimated Free-Flow Speed:

Base free-flow speed,(note-3) BFFS	60.0	mi/h
Adj. for lane and shoulder width,(note-3) fLS	0.0	mi/h
Adj. for access point density,(note-3) fA	0.3	mi/h
Free-flow speed, FFSd	59.8	mi/h
Adjustment for no-passing zones, fnp	1.9	mi/h
Average travel speed, ATSd	54.8	mi/h
Percent Free Flow Speed, PFFS	91.7	%

Percent Time-Spent-Following

Direction	Analysis(d)		Opposing (o)	
PCE for trucks, ET	1.1		1.1	
PCE for RVs, ER	1.0		1.0	
Heavy-vehicle adjustment factor, fHV	0.965		0.965	
Grade adjustment factor,(note-1) fg	1.00		1.00	
Directional flow rate,(note-2) vi	158	pc/h	180	pc/h
Base percent time-spent-following,(note-4) BPTSFd	17.5	%		
Adjustment for no-passing zones, fnp	36.4			
Percent time-spent-following, PTSFd	34.5	%		

Level of Service and Other Performance Measures

Level of service, LOS	B	
Volume to capacity ratio, v/c	0.11	
Peak 15-min vehicle-miles of travel, VMT15	95	veh-mi
Peak-hour vehicle-miles of travel, VMT60	343	veh-mi
Peak 15-min total travel time, TT15	1.7	veh-h
Capacity from ATS, CdATS	1397	veh/h
Capacity from PTSF, CdPTSF	1641	veh/h
Directional Capacity	1397	veh/h

Passing Lane Analysis

Total length of analysis segment, Lt	2.5	mi
Length of two-lane highway upstream of the passing lane, Lu	-	mi
Length of passing lane including tapers, Lpl	-	mi
Average travel speed, ATSd (from above)	54.8	mi/h
Percent time-spent-following, PTSFd (from above)	34.5	
Level of service, LOSd (from above)	B	

Average Travel Speed with Passing Lane

Downstream length of two-lane highway within effective length of passing lane for average travel speed, Lde	-	mi
Length of two-lane highway downstream of effective length of the passing lane for average travel speed, Ld	-	mi
Adj. factor for the effect of passing lane on average speed, fpl	-	
Average travel speed including passing lane, ATSpl	-	
Percent free flow speed including passing lane, PFFSpl	0.0	%

Percent Time-Spent-Following with Passing Lane

Downstream length of two-lane highway within effective length of passing lane for percent time-spent-following, Lde	-	mi
Length of two-lane highway downstream of effective length of the passing lane for percent time-spent-following, Ld	-	mi
Adj. factor for the effect of passing lane on percent time-spent-following, fpl	-	
Percent time-spent-following including passing lane, PTSFpl	-	%

Level of Service and Other Performance Measures with Passing Lane

Level of service including passing lane, LOSpl	E	
Peak 15-min total travel time, TT15	-	veh-h

Bicycle Level of Service

Posted speed limit, Sp	55
Percent of segment with occupied on-highway parking	0
Pavement rating, P	3
Flow rate in outside lane, vOL	152.2
Effective width of outside lane, We	38.93
Effective speed factor, St	4.79
Bicycle LOS Score, BLOS	17.30
Bicycle LOS	F

Notes:

1. Note that the adjustment factor for level terrain is 1.00, as level terrain is one of the base conditions. For the purpose of grade adjustment, specific dewngrade segments are treated as level terrain.
2. If vi (vd or vo) >= 1,700 pc/h, terminate analysis-the LOS is F.
3. For the analysis direction only and for v>200 veh/h.
4. For the analysis direction only.
5. Use alternative Exhibit 15-14 if some trucks operate at crawl speeds on a specific downgrade.

Phone: Fax:
E-Mail:

Directional Two-Lane Highway Segment Analysis

Analyst	RC
Agency/Co.	Kimley-Horn
Date Performed	3/21/2014
Analysis Time Period	PM Peak
Highway	SR-138
From/To	Old Ridge Rd/300th St
Jurisdiction	CALTRANS
Analysis Year	2014
Description	STATE ROUTE 138 HCS ANALYSIS

Input Data

Highway class	Class 1		Peak hour factor, PHF	0.77	
Shoulder width	10.0	ft	% Trucks and buses	31	%
Lane width	12.0	ft	% Trucks crawling	0.0	%
Segment length	4.4	mi	Truck crawl speed	0.0	mi/hr
Terrain type	Level		% Recreational vehicles	23	%
Grade: Length	-	mi	% No-passing zones	20	%
Up/down	-	%	Access point density	1	/mi

Analysis direction volume, Vd 156 veh/h
Opposing direction volume, Vo 93 veh/h

Average Travel Speed

Direction	Analysis(d)		Opposing (o)	
PCE for trucks, ET	1.5		1.8	
PCE for RVs, ER	1.0		1.0	
Heavy-vehicle adj. factor,(note-5) fHV	0.866		0.801	
Grade adj. factor,(note-1) fg	1.00		1.00	
Directional flow rate,(note-2) vi	234	pc/h	151	pc/h

Free-Flow Speed from Field Measurement:

Field measured speed,(note-3) S FM	-	mi/h
Observed total demand,(note-3) V	-	veh/h

Estimated Free-Flow Speed:

Base free-flow speed,(note-3) BFFS	60.0	mi/h
Adj. for lane and shoulder width,(note-3) fLS	0.0	mi/h
Adj. for access point density,(note-3) fA	0.3	mi/h
Free-flow speed, FFSd	59.8	mi/h
Adjustment for no-passing zones, fnp	1.3	mi/h
Average travel speed, ATSd	55.5	mi/h
Percent Free Flow Speed, PFFS	92.8	%

Percent Time-Spent-Following

Direction	Analysis(d)		Opposing (o)	
PCE for trucks, ET	1.1		1.1	
PCE for RVs, ER	1.0		1.0	
Heavy-vehicle adjustment factor, fHV	0.970		0.970	
Grade adjustment factor,(note-1) fg	1.00		1.00	
Directional flow rate,(note-2) vi	209	pc/h	125	pc/h
Base percent time-spent-following,(note-4) BPTSFd	22.4	%		
Adjustment for no-passing zones, fnp	33.0			
Percent time-spent-following, PTSFd	43.0	%		

Level of Service and Other Performance Measures

Level of service, LOS	B	
Volume to capacity ratio, v/c	0.14	
Peak 15-min vehicle-miles of travel, VMT15	223	veh-mi
Peak-hour vehicle-miles of travel, VMT60	686	veh-mi
Peak 15-min total travel time, TT15	4.0	veh-h
Capacity from ATS, CdATS	1362	veh/h
Capacity from PTSF, CdPTSF	1649	veh/h
Directional Capacity	1362	veh/h

Passing Lane Analysis

Total length of analysis segment, Lt	4.4	mi
Length of two-lane highway upstream of the passing lane, Lu	-	mi
Length of passing lane including tapers, Lpl	-	mi
Average travel speed, ATSd (from above)	55.5	mi/h
Percent time-spent-following, PTSFd (from above)	43.0	
Level of service, LOSd (from above)	B	

Average Travel Speed with Passing Lane

Downstream length of two-lane highway within effective length of passing lane for average travel speed, Lde	-	mi
Length of two-lane highway downstream of effective length of the passing lane for average travel speed, Ld	-	mi
Adj. factor for the effect of passing lane on average speed, fpl	-	
Average travel speed including passing lane, ATSpl	-	
Percent free flow speed including passing lane, PFFSpl	0.0	%

Percent Time-Spent-Following with Passing Lane

Downstream length of two-lane highway within effective length of passing lane for percent time-spent-following, Lde	-	mi
Length of two-lane highway downstream of effective length of the passing lane for percent time-spent-following, Ld	-	mi
Adj. factor for the effect of passing lane on percent time-spent-following, fpl	-	
Percent time-spent-following including passing lane, PTSFpl	-	%

Level of Service and Other Performance Measures with Passing Lane

Level of service including passing lane, LOSpl	E	
Peak 15-min total travel time, TT15	-	veh-h

Bicycle Level of Service

Posted speed limit, Sp	55
Percent of segment with occupied on-highway parking	0
Pavement rating, P	3
Flow rate in outside lane, vOL	202.6
Effective width of outside lane, We	36.84
Effective speed factor, St	4.79
Bicycle LOS Score, BLOS	13.79
Bicycle LOS	F

Notes:

1. Note that the adjustment factor for level terrain is 1.00, as level terrain is one of the base conditions. For the purpose of grade adjustment, specific dewngrade segments are treated as level terrain.
2. If vi (vd or vo) >= 1,700 pc/h, terminate analysis-the LOS is F.
3. For the analysis direction only and for v>200 veh/h.
4. For the analysis direction only.
5. Use alternative Exhibit 15-14 if some trucks operate at crawl speeds on a specific downgrade.

Phone: Fax:
E-Mail:

Directional Two-Lane Highway Segment Analysis

Analyst	RC
Agency/Co.	Kimley-Horn
Date Performed	3/21/2014
Analysis Time Period	PM Peak
Highway	SR-138
From/To	280th St/270th St
Jurisdiction	CALTRANS
Analysis Year	2014
Description	STATE ROUTE 138 HCS ANALYSIS

Input Data

Highway class	Class 1		Peak hour factor, PHF	0.90	
Shoulder width	10.0	ft	% Trucks and buses	30	%
Lane width	12.0	ft	% Trucks crawling	0.0	%
Segment length	1.3	mi	Truck crawl speed	0.0	mi/hr
Terrain type	Level		% Recreational vehicles	22	%
Grade: Length	-	mi	% No-passing zones	20	%
Up/down	-	%	Access point density	2	/mi

Analysis direction volume, Vd 148 veh/h
Opposing direction volume, Vo 78 veh/h

Average Travel Speed

Direction	Analysis(d)		Opposing (o)	
PCE for trucks, ET	1.6		1.9	
PCE for RVs, ER	1.0		1.0	
Heavy-vehicle adj. factor,(note-5) fHV	0.847		0.787	
Grade adj. factor,(note-1) fg	1.00		1.00	
Directional flow rate,(note-2) vi	194	pc/h	110	pc/h

Free-Flow Speed from Field Measurement:

Field measured speed,(note-3) S FM	-	mi/h
Observed total demand,(note-3) V	-	veh/h

Estimated Free-Flow Speed:

Base free-flow speed,(note-3) BFFS	60.0	mi/h
Adj. for lane and shoulder width,(note-3) fLS	0.0	mi/h
Adj. for access point density,(note-3) fA	0.5	mi/h
Free-flow speed, FFSd	59.5	mi/h
Adjustment for no-passing zones, fnp	0.8	mi/h
Average travel speed, ATSd	56.3	mi/h
Percent Free Flow Speed, PFFS	94.7	%

Percent Time-Spent-Following

Direction	Analysis(d)		Opposing (o)	
PCE for trucks, ET	1.1		1.1	
PCE for RVs, ER	1.0		1.0	
Heavy-vehicle adjustment factor, fHV	0.971		0.971	
Grade adjustment factor,(note-1) fg	1.00		1.00	
Directional flow rate,(note-2) vi	169	pc/h	89	pc/h
Base percent time-spent-following,(note-4) BPTSFd	18.6	%		
Adjustment for no-passing zones, fnp	30.3			
Percent time-spent-following, PTSFd	38.4	%		

Level of Service and Other Performance Measures

Level of service, LOS	B	
Volume to capacity ratio, v/c	0.11	
Peak 15-min vehicle-miles of travel, VMT15	53	veh-mi
Peak-hour vehicle-miles of travel, VMT60	192	veh-mi
Peak 15-min total travel time, TT15	0.9	veh-h
Capacity from ATS, CdATS	1338	veh/h
Capacity from PTSF, CdPTSF	1650	veh/h
Directional Capacity	1338	veh/h

Passing Lane Analysis

Total length of analysis segment, Lt	1.3	mi
Length of two-lane highway upstream of the passing lane, Lu	-	mi
Length of passing lane including tapers, Lpl	-	mi
Average travel speed, ATSd (from above)	56.3	mi/h
Percent time-spent-following, PTSFd (from above)	38.4	
Level of service, LOSd (from above)	B	

Average Travel Speed with Passing Lane

Downstream length of two-lane highway within effective length of passing lane for average travel speed, Lde	-	mi
Length of two-lane highway downstream of effective length of the passing lane for average travel speed, Ld	-	mi
Adj. factor for the effect of passing lane on average speed, fpl	-	
Average travel speed including passing lane, ATSpl	-	
Percent free flow speed including passing lane, PFFSpl	0.0	%

Percent Time-Spent-Following with Passing Lane

Downstream length of two-lane highway within effective length of passing lane for percent time-spent-following, Lde	-	mi
Length of two-lane highway downstream of effective length of the passing lane for percent time-spent-following, Ld	-	mi
Adj. factor for the effect of passing lane on percent time-spent-following, fpl	-	
Percent time-spent-following including passing lane, PTSFpl	-	%

Level of Service and Other Performance Measures with Passing Lane

Level of service including passing lane, LOSpl	E	
Peak 15-min total travel time, TT15	-	veh-h

Bicycle Level of Service

Posted speed limit, Sp	55
Percent of segment with occupied on-highway parking	0
Pavement rating, P	3
Flow rate in outside lane, vOL	164.4
Effective width of outside lane, We	37.72
Effective speed factor, St	4.79
Bicycle LOS Score, BLOS	12.53
Bicycle LOS	F

Notes:

1. Note that the adjustment factor for level terrain is 1.00, as level terrain is one of the base conditions. For the purpose of grade adjustment, specific dewngrade segments are treated as level terrain.
2. If vi (vd or vo) >= 1,700 pc/h, terminate analysis-the LOS is F.
3. For the analysis direction only and for v>200 veh/h.
4. For the analysis direction only.
5. Use alternative Exhibit 15-14 if some trucks operate at crawl speeds on a specific downgrade.

Phone: Fax:
E-Mail:

Directional Two-Lane Highway Segment Analysis

Analyst	RC
Agency/Co.	Kimley-Horn
Date Performed	3/21/2014
Analysis Time Period	PM Peak
Highway	SR-138
From/To	Three Points Rd/245th St
Jurisdiction	CALTRANS
Analysis Year	2014
Description	STATE ROUTE 138 HCS ANALYSIS

Input Data

Highway class	Class 1		Peak hour factor, PHF	0.89	
Shoulder width	10.0	ft	% Trucks and buses	32	%
Lane width	12.0	ft	% Trucks crawling	0.0	%
Segment length	1.6	mi	Truck crawl speed	0.0	mi/hr
Terrain type	Level		% Recreational vehicles	22	%
Grade: Length	-	mi	% No-passing zones	20	%
Up/down	-	%	Access point density	3	/mi

Analysis direction volume, Vd 143 veh/h
Opposing direction volume, Vo 75 veh/h

Average Travel Speed

Direction	Analysis(d)		Opposing (o)	
PCE for trucks, ET	1.7		1.9	
PCE for RVs, ER	1.0		1.0	
Heavy-vehicle adj. factor,(note-5) fHV	0.817		0.776	
Grade adj. factor,(note-1) fg	1.00		1.00	
Directional flow rate,(note-2) vi	197	pc/h	109	pc/h

Free-Flow Speed from Field Measurement:

Field measured speed,(note-3) S FM	-	mi/h
Observed total demand,(note-3) V	-	veh/h

Estimated Free-Flow Speed:

Base free-flow speed,(note-3) BFFS	60.0	mi/h
Adj. for lane and shoulder width,(note-3) fLS	0.0	mi/h
Adj. for access point density,(note-3) fA	0.8	mi/h
Free-flow speed, FFSd	59.3	mi/h
Adjustment for no-passing zones, fnp	0.8	mi/h
Average travel speed, ATSd	56.1	mi/h
Percent Free Flow Speed, PFFS	94.7	%

Percent Time-Spent-Following

Direction	Analysis(d)		Opposing (o)	
PCE for trucks, ET	1.1		1.1	
PCE for RVs, ER	1.0		1.0	
Heavy-vehicle adjustment factor, fHV	0.969		0.969	
Grade adjustment factor,(note-1) fg	1.00		1.00	
Directional flow rate,(note-2) vi	166	pc/h	87	pc/h
Base percent time-spent-following,(note-4) BPTSFd	18.3	%		
Adjustment for no-passing zones, fnp	30.2			
Percent time-spent-following, PTSFd	38.1	%		

Level of Service and Other Performance Measures

Level of service, LOS	B	
Volume to capacity ratio, v/c	0.12	
Peak 15-min vehicle-miles of travel, VMT15	64	veh-mi
Peak-hour vehicle-miles of travel, VMT60	229	veh-mi
Peak 15-min total travel time, TT15	1.1	veh-h
Capacity from ATS, CdATS	1319	veh/h
Capacity from PTSF, CdPTSF	1647	veh/h
Directional Capacity	1319	veh/h

Passing Lane Analysis

Total length of analysis segment, Lt	1.6	mi
Length of two-lane highway upstream of the passing lane, Lu	-	mi
Length of passing lane including tapers, Lpl	-	mi
Average travel speed, ATSd (from above)	56.1	mi/h
Percent time-spent-following, PTSFd (from above)	38.1	
Level of service, LOSd (from above)	B	

Average Travel Speed with Passing Lane

Downstream length of two-lane highway within effective length of passing lane for average travel speed, Lde	-	mi
Length of two-lane highway downstream of effective length of the passing lane for average travel speed, Ld	-	mi
Adj. factor for the effect of passing lane on average speed, fpl	-	
Average travel speed including passing lane, ATSpl	-	
Percent free flow speed including passing lane, PFFSpl	0.0	%

Percent Time-Spent-Following with Passing Lane

Downstream length of two-lane highway within effective length of passing lane for percent time-spent-following, Lde	-	mi
Length of two-lane highway downstream of effective length of the passing lane for percent time-spent-following, Ld	-	mi
Adj. factor for the effect of passing lane on percent time-spent-following, fpl	-	
Percent time-spent-following including passing lane, PTSFpl	-	%

Level of Service and Other Performance Measures with Passing Lane

Level of service including passing lane, LOSpl	E	
Peak 15-min total travel time, TT15	-	veh-h

Bicycle Level of Service

Posted speed limit, Sp	55
Percent of segment with occupied on-highway parking	0
Pavement rating, P	3
Flow rate in outside lane, vOL	160.7
Effective width of outside lane, We	38.27
Effective speed factor, St	4.79
Bicycle LOS Score, BLOS	13.99
Bicycle LOS	F

Notes:

1. Note that the adjustment factor for level terrain is 1.00, as level terrain is one of the base conditions. For the purpose of grade adjustment, specific dewngrade segments are treated as level terrain.
2. If vi (vd or vo) >= 1,700 pc/h, terminate analysis-the LOS is F.
3. For the analysis direction only and for v>200 veh/h.
4. For the analysis direction only.
5. Use alternative Exhibit 15-14 if some trucks operate at crawl speeds on a specific downgrade.

Phone: Fax:
E-Mail:

Directional Two-Lane Highway Segment Analysis

Analyst	RC
Agency/Co.	Kimley-Horn
Date Performed	3/21/2014
Analysis Time Period	PM Peak
Highway	SR-138
From/To	230th St/190th St
Jurisdiction	CALTRANS
Analysis Year	2014
Description	STATE ROUTE 138 HCS ANALYSIS

Input Data

Highway class	Class 1		Peak hour factor, PHF	0.88	
Shoulder width	10.0	ft	% Trucks and buses	33	%
Lane width	12.0	ft	% Trucks crawling	0.0	%
Segment length	1.6	mi	Truck crawl speed	0.0	mi/hr
Terrain type	Level		% Recreational vehicles	22	%
Grade: Length	-	mi	% No-passing zones	20	%
Up/down	-	%	Access point density	2	/mi

Analysis direction volume, Vd 136 veh/h
Opposing direction volume, Vo 81 veh/h

Average Travel Speed

Direction	Analysis(d)		Opposing (o)	
PCE for trucks, ET	1.7		1.9	
PCE for RVs, ER	1.0		1.0	
Heavy-vehicle adj. factor,(note-5) fHV	0.812		0.771	
Grade adj. factor,(note-1) fg	1.00		1.00	
Directional flow rate,(note-2) vi	190	pc/h	119	pc/h

Free-Flow Speed from Field Measurement:

Field measured speed,(note-3) S FM	-	mi/h
Observed total demand,(note-3) V	-	veh/h

Estimated Free-Flow Speed:

Base free-flow speed,(note-3) BFFS	60.0	mi/h
Adj. for lane and shoulder width,(note-3) fLS	0.0	mi/h
Adj. for access point density,(note-3) fA	0.5	mi/h
Free-flow speed, FFSd	59.5	mi/h
Adjustment for no-passing zones, fnp	0.9	mi/h
Average travel speed, ATSd	56.2	mi/h
Percent Free Flow Speed, PFFS	94.5	%

Percent Time-Spent-Following

Direction	Analysis(d)		Opposing (o)	
PCE for trucks, ET	1.1		1.1	
PCE for RVs, ER	1.0		1.0	
Heavy-vehicle adjustment factor, fHV	0.968		0.968	
Grade adjustment factor,(note-1) fg	1.00		1.00	
Directional flow rate,(note-2) vi	160	pc/h	95	pc/h
Base percent time-spent-following,(note-4) BPTSFd	17.7	%		
Adjustment for no-passing zones, fnp	31.2			
Percent time-spent-following, PTSFd	37.3	%		

Level of Service and Other Performance Measures

Level of service, LOS	B	
Volume to capacity ratio, v/c	0.11	
Peak 15-min vehicle-miles of travel, VMT15	62	veh-mi
Peak-hour vehicle-miles of travel, VMT60	218	veh-mi
Peak 15-min total travel time, TT15	1.1	veh-h
Capacity from ATS, CdATS	1311	veh/h
Capacity from PTSF, CdPTSF	1646	veh/h
Directional Capacity	1311	veh/h

Passing Lane Analysis

Total length of analysis segment, Lt	1.6	mi
Length of two-lane highway upstream of the passing lane, Lu	-	mi
Length of passing lane including tapers, Lpl	-	mi
Average travel speed, ATSd (from above)	56.2	mi/h
Percent time-spent-following, PTSFd (from above)	37.3	
Level of service, LOSd (from above)	B	

Average Travel Speed with Passing Lane

Downstream length of two-lane highway within effective length of passing lane for average travel speed, Lde	-	mi
Length of two-lane highway downstream of effective length of the passing lane for average travel speed, Ld	-	mi
Adj. factor for the effect of passing lane on average speed, fpl	-	
Average travel speed including passing lane, ATSpl	-	
Percent free flow speed including passing lane, PFFSpl	0.0	%

Percent Time-Spent-Following with Passing Lane

Downstream length of two-lane highway within effective length of passing lane for percent time-spent-following, Lde	-	mi
Length of two-lane highway downstream of effective length of the passing lane for percent time-spent-following, Ld	-	mi
Adj. factor for the effect of passing lane on percent time-spent-following, fpl	-	
Percent time-spent-following including passing lane, PTSFpl	-	%

Level of Service and Other Performance Measures with Passing Lane

Level of service including passing lane, LOSpl	E	
Peak 15-min total travel time, TT15	-	veh-h

Bicycle Level of Service

Posted speed limit, Sp	55
Percent of segment with occupied on-highway parking	0
Pavement rating, P	3
Flow rate in outside lane, vOL	154.5
Effective width of outside lane, We	39.04
Effective speed factor, St	4.79
Bicycle LOS Score, BLOS	14.54
Bicycle LOS	F

Notes:

1. Note that the adjustment factor for level terrain is 1.00, as level terrain is one of the base conditions. For the purpose of grade adjustment, specific dewngrade segments are treated as level terrain.
2. If vi (vd or vo) >= 1,700 pc/h, terminate analysis-the LOS is F.
3. For the analysis direction only and for v>200 veh/h.
4. For the analysis direction only.
5. Use alternative Exhibit 15-14 if some trucks operate at crawl speeds on a specific downgrade.

Phone: Fax:
E-Mail:

Directional Two-Lane Highway Segment Analysis

Analyst	RC
Agency/Co.	Kimley-Horn
Date Performed	3/21/2014
Analysis Time Period	PM Peak
Highway	SR-138
From/To	190th St/130th St
Jurisdiction	CALTRANS
Analysis Year	2014
Description	STATE ROUTE 138 HCS ANALYSIS

Input Data

Highway class	Class 1		Peak hour factor, PHF	0.89	
Shoulder width	10.0	ft	% Trucks and buses	31	%
Lane width	12.0	ft	% Trucks crawling	0.0	%
Segment length	6.0	mi	Truck crawl speed	0.0	mi/hr
Terrain type	Level		% Recreational vehicles	24	%
Grade: Length	-	mi	% No-passing zones	20	%
Up/down	-	%	Access point density	2	/mi

Analysis direction volume, Vd 251 veh/h
Opposing direction volume, Vo 70 veh/h

Average Travel Speed

Direction	Analysis(d)		Opposing (o)	
PCE for trucks, ET	1.4		1.9	
PCE for RVs, ER	1.0		1.0	
Heavy-vehicle adj. factor,(note-5) fHV	0.890		0.782	
Grade adj. factor,(note-1) fg	1.00		1.00	
Directional flow rate,(note-2) vi	317	pc/h	101	pc/h

Free-Flow Speed from Field Measurement:

Field measured speed,(note-3) S FM	-	mi/h
Observed total demand,(note-3) V	-	veh/h

Estimated Free-Flow Speed:

Base free-flow speed,(note-3) BFFS	60.0	mi/h
Adj. for lane and shoulder width,(note-3) fLS	0.0	mi/h
Adj. for access point density,(note-3) fA	0.5	mi/h
Free-flow speed, FFSd	59.5	mi/h
Adjustment for no-passing zones, fnp	0.7	mi/h
Average travel speed, ATSd	55.6	mi/h
Percent Free Flow Speed, PFFS	93.4	%

Percent Time-Spent-Following

Direction	Analysis(d)		Opposing (o)	
PCE for trucks, ET	1.1		1.1	
PCE for RVs, ER	1.0		1.0	
Heavy-vehicle adjustment factor, fHV	0.970		0.970	
Grade adjustment factor,(note-1) fg	1.00		1.00	
Directional flow rate,(note-2) vi	291	pc/h	81	pc/h
Base percent time-spent-following,(note-4) BPTSFd	29.5	%		
Adjustment for no-passing zones, fnp	26.9			
Percent time-spent-following, PTSFd	50.5	%		

Level of Service and Other Performance Measures

Level of service, LOS	C	
Volume to capacity ratio, v/c	0.19	
Peak 15-min vehicle-miles of travel, VMT15	423	veh-mi
Peak-hour vehicle-miles of travel, VMT60	1506	veh-mi
Peak 15-min total travel time, TT15	7.6	veh-h
Capacity from ATS, CdATS	1329	veh/h
Capacity from PTSF, CdPTSF	1649	veh/h
Directional Capacity	1329	veh/h

Passing Lane Analysis

Total length of analysis segment, Lt	6.0	mi
Length of two-lane highway upstream of the passing lane, Lu	-	mi
Length of passing lane including tapers, Lpl	-	mi
Average travel speed, ATSd (from above)	55.6	mi/h
Percent time-spent-following, PTSFd (from above)	50.5	
Level of service, LOSd (from above)	C	

Average Travel Speed with Passing Lane

Downstream length of two-lane highway within effective length of passing lane for average travel speed, Lde	-	mi
Length of two-lane highway downstream of effective length of the passing lane for average travel speed, Ld	-	mi
Adj. factor for the effect of passing lane on average speed, fpl	-	
Average travel speed including passing lane, ATSpl	-	
Percent free flow speed including passing lane, PFFSpl	0.0	%

Percent Time-Spent-Following with Passing Lane

Downstream length of two-lane highway within effective length of passing lane for percent time-spent-following, Lde	-	mi
Length of two-lane highway downstream of effective length of the passing lane for percent time-spent-following, Ld	-	mi
Adj. factor for the effect of passing lane on percent time-spent-following, fpl	-	
Percent time-spent-following including passing lane, PTSFpl	-	%

Level of Service and Other Performance Measures with Passing Lane

Level of service including passing lane, LOSpl	E	
Peak 15-min total travel time, TT15	-	veh-h

Bicycle Level of Service

Posted speed limit, Sp	55
Percent of segment with occupied on-highway parking	0
Pavement rating, P	3
Flow rate in outside lane, vOL	282.0
Effective width of outside lane, We	32.00
Effective speed factor, St	4.79
Bicycle LOS Score, BLOS	15.62
Bicycle LOS	F

Notes:

1. Note that the adjustment factor for level terrain is 1.00, as level terrain is one of the base conditions. For the purpose of grade adjustment, specific dewngrade segments are treated as level terrain.
2. If vi (vd or vo) >= 1,700 pc/h, terminate analysis-the LOS is F.
3. For the analysis direction only and for v>200 veh/h.
4. For the analysis direction only.
5. Use alternative Exhibit 15-14 if some trucks operate at crawl speeds on a specific downgrade.

Phone: Fax:
E-Mail:

Directional Two-Lane Highway Segment Analysis

Analyst	RC
Agency/Co.	Kimley-Horn
Date Performed	3/21/2014
Analysis Time Period	PM Peak
Highway	SR-138
From/To	130th St/80th St
Jurisdiction	CALTRANS
Analysis Year	2014
Description	STATE ROUTE 138 HCS ANALYSIS

Input Data

Highway class	Class 1		Peak hour factor, PHF	0.91	
Shoulder width	10.0	ft	% Trucks and buses	29	%
Lane width	12.0	ft	% Trucks crawling	0.0	%
Segment length	5.0	mi	Truck crawl speed	0.0	mi/hr
Terrain type	Level		% Recreational vehicles	23	%
Grade: Length	-	mi	% No-passing zones	20	%
Up/down	-	%	Access point density	3	/mi

Analysis direction volume, Vd 248 veh/h
Opposing direction volume, Vo 70 veh/h

Average Travel Speed

Direction	Analysis(d)		Opposing (o)	
PCE for trucks, ET	1.4		1.9	
PCE for RVs, ER	1.0		1.0	
Heavy-vehicle adj. factor,(note-5) fHV	0.896		0.793	
Grade adj. factor,(note-1) fg	1.00		1.00	
Directional flow rate,(note-2) vi	304	pc/h	97	pc/h

Free-Flow Speed from Field Measurement:

Field measured speed,(note-3) S FM	-	mi/h
Observed total demand,(note-3) V	-	veh/h

Estimated Free-Flow Speed:

Base free-flow speed,(note-3) BFFS	60.0	mi/h
Adj. for lane and shoulder width,(note-3) fLS	0.0	mi/h
Adj. for access point density,(note-3) fA	0.8	mi/h
Free-flow speed, FFSd	59.3	mi/h
Adjustment for no-passing zones, fnp	0.7	mi/h
Average travel speed, ATSd	55.5	mi/h
Percent Free Flow Speed, PFFS	93.6	%

Percent Time-Spent-Following

Direction	Analysis(d)		Opposing (o)	
PCE for trucks, ET	1.1		1.1	
PCE for RVs, ER	1.0		1.0	
Heavy-vehicle adjustment factor, fHV	0.972		0.972	
Grade adjustment factor,(note-1) fg	1.00		1.00	
Directional flow rate,(note-2) vi	280	pc/h	79	pc/h
Base percent time-spent-following,(note-4) BPTSFd	28.6	%		
Adjustment for no-passing zones, fnp	27.0			
Percent time-spent-following, PTSFd	49.7	%		

Level of Service and Other Performance Measures

Level of service, LOS	B	
Volume to capacity ratio, v/c	0.18	
Peak 15-min vehicle-miles of travel, VMT15	341	veh-mi
Peak-hour vehicle-miles of travel, VMT60	1240	veh-mi
Peak 15-min total travel time, TT15	6.1	veh-h
Capacity from ATS, CdATS	1348	veh/h
Capacity from PTSF, CdPTSF	1652	veh/h
Directional Capacity	1348	veh/h

Passing Lane Analysis

Total length of analysis segment, Lt	5.0	mi
Length of two-lane highway upstream of the passing lane, Lu	-	mi
Length of passing lane including tapers, Lpl	-	mi
Average travel speed, ATSd (from above)	55.5	mi/h
Percent time-spent-following, PTSFd (from above)	49.7	
Level of service, LOSd (from above)	B	

Average Travel Speed with Passing Lane

Downstream length of two-lane highway within effective length of passing lane for average travel speed, Lde	-	mi
Length of two-lane highway downstream of effective length of the passing lane for average travel speed, Ld	-	mi
Adj. factor for the effect of passing lane on average speed, fpl	-	
Average travel speed including passing lane, ATSpl	-	
Percent free flow speed including passing lane, PFFSpl	0.0	%

Percent Time-Spent-Following with Passing Lane

Downstream length of two-lane highway within effective length of passing lane for percent time-spent-following, Lde	-	mi
Length of two-lane highway downstream of effective length of the passing lane for percent time-spent-following, Ld	-	mi
Adj. factor for the effect of passing lane on percent time-spent-following, fpl	-	
Percent time-spent-following including passing lane, PTSFpl	-	%

Level of Service and Other Performance Measures with Passing Lane

Level of service including passing lane, LOSpl	E	
Peak 15-min total travel time, TT15	-	veh-h

Bicycle Level of Service

Posted speed limit, Sp	55
Percent of segment with occupied on-highway parking	0
Pavement rating, P	3
Flow rate in outside lane, vOL	272.5
Effective width of outside lane, We	32.00
Effective speed factor, St	4.79
Bicycle LOS Score, BLOS	13.97
Bicycle LOS	F

Notes:

1. Note that the adjustment factor for level terrain is 1.00, as level terrain is one of the base conditions. For the purpose of grade adjustment, specific dewngrade segments are treated as level terrain.
2. If vi (vd or vo) >= 1,700 pc/h, terminate analysis-the LOS is F.
3. For the analysis direction only and for v>200 veh/h.
4. For the analysis direction only.
5. Use alternative Exhibit 15-14 if some trucks operate at crawl speeds on a specific downgrade.

Phone: Fax:
E-Mail:

Directional Two-Lane Highway Segment Analysis

Analyst	RC
Agency/Co.	Kimley-Horn
Date Performed	3/21/2014
Analysis Time Period	PM Peak
Highway	SR-138
From/To	80th St/30th St
Jurisdiction	CALTRANS
Analysis Year	2014
Description	STATE ROUTE 138 HCS ANALYSIS

Input Data

Highway class	Class 1		Peak hour factor, PHF	0.94	
Shoulder width	10.0	ft	% Trucks and buses	28	%
Lane width	12.0	ft	% Trucks crawling	0.0	%
Segment length	5.0	mi	Truck crawl speed	0.0	mi/hr
Terrain type	Level		% Recreational vehicles	22	%
Grade: Length	-	mi	% No-passing zones	20	%
Up/down	-	%	Access point density	3	/mi

Analysis direction volume, Vd 253 veh/h
Opposing direction volume, Vo 99 veh/h

Average Travel Speed

Direction	Analysis(d)		Opposing (o)	
PCE for trucks, ET	1.4		1.9	
PCE for RVs, ER	1.0		1.0	
Heavy-vehicle adj. factor,(note-5) fHV	0.899		0.799	
Grade adj. factor,(note-1) fg	1.00		1.00	
Directional flow rate,(note-2) vi	299	pc/h	132	pc/h

Free-Flow Speed from Field Measurement:

Field measured speed,(note-3) S FM	-	mi/h
Observed total demand,(note-3) V	-	veh/h

Estimated Free-Flow Speed:

Base free-flow speed,(note-3) BFFS	60.0	mi/h
Adj. for lane and shoulder width,(note-3) fLS	0.0	mi/h
Adj. for access point density,(note-3) fA	0.8	mi/h
Free-flow speed, FFSd	59.3	mi/h
Adjustment for no-passing zones, fnp	1.0	mi/h
Average travel speed, ATSd	54.9	mi/h
Percent Free Flow Speed, PFFS	92.6	%

Percent Time-Spent-Following

Direction	Analysis(d)		Opposing (o)	
PCE for trucks, ET	1.1		1.1	
PCE for RVs, ER	1.0		1.0	
Heavy-vehicle adjustment factor, fHV	0.973		0.973	
Grade adjustment factor,(note-1) fg	1.00		1.00	
Directional flow rate,(note-2) vi	277	pc/h	108	pc/h
Base percent time-spent-following,(note-4) BPTSFd	28.3	%		
Adjustment for no-passing zones, fnp	29.4			
Percent time-spent-following, PTSFd	49.5	%		

Level of Service and Other Performance Measures

Level of service, LOS	B	
Volume to capacity ratio, v/c	0.18	
Peak 15-min vehicle-miles of travel, VMT15	336	veh-mi
Peak-hour vehicle-miles of travel, VMT60	1265	veh-mi
Peak 15-min total travel time, TT15	6.1	veh-h
Capacity from ATS, CdATS	1059	veh/h
Capacity from PTSF, CdPTSF	1654	veh/h
Directional Capacity	1059	veh/h

Passing Lane Analysis

Total length of analysis segment, Lt	5.0	mi
Length of two-lane highway upstream of the passing lane, Lu	-	mi
Length of passing lane including tapers, Lpl	-	mi
Average travel speed, ATSd (from above)	54.9	mi/h
Percent time-spent-following, PTSFd (from above)	49.5	
Level of service, LOSd (from above)	B	

Average Travel Speed with Passing Lane

Downstream length of two-lane highway within effective length of passing lane for average travel speed, Lde	-	mi
Length of two-lane highway downstream of effective length of the passing lane for average travel speed, Ld	-	mi
Adj. factor for the effect of passing lane on average speed, fpl	-	
Average travel speed including passing lane, ATSpl	-	
Percent free flow speed including passing lane, PFFSpl	0.0	%

Percent Time-Spent-Following with Passing Lane

Downstream length of two-lane highway within effective length of passing lane for percent time-spent-following, Lde	-	mi
Length of two-lane highway downstream of effective length of the passing lane for percent time-spent-following, Ld	-	mi
Adj. factor for the effect of passing lane on percent time-spent-following, fpl	-	
Percent time-spent-following including passing lane, PTSFpl	-	%

Level of Service and Other Performance Measures with Passing Lane

Level of service including passing lane, LOSpl	E	
Peak 15-min total travel time, TT15	-	veh-h

Bicycle Level of Service

Posted speed limit, Sp	55
Percent of segment with occupied on-highway parking	0
Pavement rating, P	3
Flow rate in outside lane, vOL	269.1
Effective width of outside lane, We	32.00
Effective speed factor, St	4.79
Bicycle LOS Score, BLOS	13.18
Bicycle LOS	F

Notes:

1. Note that the adjustment factor for level terrain is 1.00, as level terrain is one of the base conditions. For the purpose of grade adjustment, specific dewngrade segments are treated as level terrain.
2. If vi (vd or vo) >= 1,700 pc/h, terminate analysis-the LOS is F.
3. For the analysis direction only and for v>200 veh/h.
4. For the analysis direction only.
5. Use alternative Exhibit 15-14 if some trucks operate at crawl speeds on a specific downgrade.

Phone: Fax:
E-Mail:

Directional Two-Lane Highway Segment Analysis

Analyst	RC
Agency/Co.	Kimley-Horn
Date Performed	3/21/2014
Analysis Time Period	PM Peak
Highway	SR-138
From/To	30th St/Route 14
Jurisdiction	CALTRANS
Analysis Year	2014
Description	STATE ROUTE 138 HCS ANALYSIS

Input Data

Highway class	Class 1		Peak hour factor, PHF	0.94	
Shoulder width	10.0	ft	% Trucks and buses	38	%
Lane width	12.0	ft	% Trucks crawling	0.0	%
Segment length	0.7	mi	Truck crawl speed	0.0	mi/hr
Terrain type	Level		% Recreational vehicles	20	%
Grade: Length	-	mi	% No-passing zones	20	%
Up/down	-	%	Access point density	1	/mi

Analysis direction volume, Vd 65 veh/h
Opposing direction volume, Vo 45 veh/h

Average Travel Speed

Direction	Analysis(d)		Opposing (o)	
PCE for trucks, ET	1.9		1.9	
PCE for RVs, ER	1.0		1.0	
Heavy-vehicle adj. factor,(note-5) fHV	0.745		0.745	
Grade adj. factor,(note-1) fg	1.00		1.00	
Directional flow rate,(note-2) vi	93	pc/h	64	pc/h

Free-Flow Speed from Field Measurement:

Field measured speed,(note-3) S FM	-	mi/h
Observed total demand,(note-3) V	-	veh/h

Estimated Free-Flow Speed:

Base free-flow speed,(note-3) BFFS	60.0	mi/h
Adj. for lane and shoulder width,(note-3) fLS	0.0	mi/h
Adj. for access point density,(note-3) fA	0.3	mi/h
Free-flow speed, FFSd	59.8	mi/h
Adjustment for no-passing zones, fnp	0.7	mi/h
Average travel speed, ATSd	57.8	mi/h
Percent Free Flow Speed, PFFS	96.8	%

Percent Time-Spent-Following

Direction	Analysis(d)		Opposing (o)	
PCE for trucks, ET	1.1		1.1	
PCE for RVs, ER	1.0		1.0	
Heavy-vehicle adjustment factor, fHV	0.963		0.963	
Grade adjustment factor,(note-1) fg	1.00		1.00	
Directional flow rate,(note-2) vi	72	pc/h	50	pc/h

Base percent time-spent-following,(note-4) BPTSFd	8.6	%
Adjustment for no-passing zones, fnp	30.5	
Percent time-spent-following, PTSFd	26.6	%

Level of Service and Other Performance Measures

Level of service, LOS	A	
Volume to capacity ratio, v/c	0.05	
Peak 15-min vehicle-miles of travel, VMT15	12	veh-mi
Peak-hour vehicle-miles of travel, VMT60	45	veh-mi
Peak 15-min total travel time, TT15	0.2	veh-h
Capacity from ATS, CdATS	1267	veh/h
Capacity from PTSF, CdPTSF	1638	veh/h
Directional Capacity	1267	veh/h

Passing Lane Analysis

Total length of analysis segment, Lt	0.7	mi
Length of two-lane highway upstream of the passing lane, Lu	-	mi
Length of passing lane including tapers, Lpl	-	mi
Average travel speed, ATSd (from above)	57.8	mi/h
Percent time-spent-following, PTSFd (from above)	26.6	
Level of service, LOSd (from above)	A	

Average Travel Speed with Passing Lane

Downstream length of two-lane highway within effective length of passing lane for average travel speed, Lde	-	mi
Length of two-lane highway downstream of effective length of the passing lane for average travel speed, Ld	-	mi
Adj. factor for the effect of passing lane on average speed, fpl	-	
Average travel speed including passing lane, ATSpl	-	
Percent free flow speed including passing lane, PFFSpl	0.0	%

Percent Time-Spent-Following with Passing Lane

Downstream length of two-lane highway within effective length of passing lane for percent time-spent-following, Lde	-	mi
Length of two-lane highway downstream of effective length of the passing lane for percent time-spent-following, Ld	-	mi
Adj. factor for the effect of passing lane on percent time-spent-following, fpl	-	
Percent time-spent-following including passing lane, PTSFpl	-	%

Level of Service and Other Performance Measures with Passing Lane

Level of service including passing lane, LOSpl	E	
Peak 15-min total travel time, TT15	-	veh-h

Bicycle Level of Service

Posted speed limit, Sp	55
Percent of segment with occupied on-highway parking	0
Pavement rating, P	3
Flow rate in outside lane, vOL	69.1
Effective width of outside lane, We	46.85
Effective speed factor, St	4.79
Bicycle LOS Score, BLOS	15.43
Bicycle LOS	F

Notes:

1. Note that the adjustment factor for level terrain is 1.00, as level terrain is one of the base conditions. For the purpose of grade adjustment, specific dewngrade segments are treated as level terrain.
2. If vi (vd or vo) >= 1,700 pc/h, terminate analysis-the LOS is F.
3. For the analysis direction only and for v>200 veh/h.
4. For the analysis direction only.
5. Use alternative Exhibit 15-14 if some trucks operate at crawl speeds on a specific downgrade.

Appendix E

I-5 & SR-138 Operations

HCM LOS Results for Existing, 2020/2025, and No Build/TSM Year 2040

VISSIM LOS Results for Year 2040 Alternatives 1 & 2

HCM 2010
Basic Freeway & Merge Segments
Operational Analysis

Jurisdiction: Los Angeles County
Analysis Year: 2020/2025 & 2040
Sceanrio: No Build/TSM, Alternative 1 & 2

Metro/Caltrans
6/12/2015
I-5 & SR-138 Interchange

General Information			*Flow Rate Calculation*												*Results*		
Freeway/ Direction	From/To	Analysis Time Period	Volume (vph)	PHF	Lanes	Terrain	Truck/ Bus %	E_T	E_R	f_{HV}	f_P	Flow Rate v_p (pcphpl)	FFS (mph)	v_p/c	Speed, S (mph)	Density, D (pcplpm)	Level of Service
Existing																	
1	I5 NB (South of SR-138)	AM	2,220	0.95	4	Level	25%	1.5	1.2	0.889	1.00	876	65	0.37	65.0	**13.5**	**B**
2	I5 SB (South of SR-138)	AM	2,300	0.95	4	Level	25%	1.5	1.2	0.889	1.00	908	65	0.39	65.0	**14.0**	**B**
3	I5 NB (North of SR-138)	AM	2,370	0.95	4	Level	25%	1.5	1.2	0.889	1.00	936	65	0.40	65.0	**14.4**	**B**
4	I5 SB (North of SR-138)	AM	2,370	0.95	4	Level	25%	1.5	1.2	0.889	1.00	936	65	0.40	65.0	**14.4**	**B**
1	I5 NB (South of SR-138)	PM	2,210	0.95	4	Level	25%	1.5	1.2	0.889	1.00	872	65	0.37	65.0	**13.4**	**B**
2	I5 SB (South of SR-138)	PM	2,160	0.95	4	Level	25%	1.5	1.2	0.889	1.00	853	65	0.36	65.0	**13.1**	**B**
3	I5 NB (North of SR-138)	PM	2,295	0.95	4	Level	25%	1.5	1.2	0.889	1.00	906	65	0.39	65.0	**13.9**	**B**
4	I5 SB (North of SR-138)	PM	2,250	0.95	4	Level	25%	1.5	1.2	0.889	1.00	888	65	0.38	65.0	**13.7**	**B**
2020 No Build/TSM																	
1	I5 NB (South of SR-138)	AM	2,650	0.95	4	Level	25%	1.5	1.2	0.889	1.00	1,046	65	0.45	65.0	**16.1**	**B**
2	I5 SB (South of SR-138)	AM	3,040	0.95	4	Level	25%	1.5	1.2	0.889	1.00	1,200	65	0.51	65.0	**18.5**	**C**
3	I5 NB (North of SR-138)	AM	2,790	0.95	4	Level	25%	1.5	1.2	0.889	1.00	1,101	65	0.47	65.0	**16.9**	**B**
4	I5 SB (North of SR-138)	AM	2,990	0.95	4	Level	25%	1.5	1.2	0.889	1.00	1,180	65	0.50	65.0	**18.2**	**C**
1	I5 NB (South of SR-138)	PM	2,990	0.95	4	Level	25%	1.5	1.2	0.889	1.00	1,180	65	0.50	65.0	**18.2**	**C**
2	I5 SB (South of SR-138)	PM	2,660	0.95	4	Level	25%	1.5	1.2	0.889	1.00	1,050	65	0.45	65.0	**16.2**	**B**
3	I5 NB (North of SR-138)	PM	2,990	0.95	4	Level	25%	1.5	1.2	0.889	1.00	1,180	65	0.50	65.0	**18.2**	**C**
4	I5 SB (North of SR-138)	PM	2,750	0.95	4	Level	25%	1.5	1.2	0.889	1.00	1,086	65	0.46	65.0	**16.7**	**B**
2025 Alternative 1																	
1	I5 NB (South of SR-138)	AM	3,060	0.95	4	Level	25%	1.5	1.2	0.889	1.00	1,208	65	0.51	65.0	**18.6**	**C**
2	I5 SB (South of SR-138)	AM	3,870	0.95	4	Level	25%	1.5	1.2	0.889	1.00	1,528	65	0.65	64.8	**23.6**	**C**
3	I5 NB (North of SR-138)	AM	3,340	0.95	4	Level	25%	1.5	1.2	0.889	1.00	1,318	65	0.56	65.0	**20.3**	**C**
4	I5 SB (North of SR-138)	AM	3,570	0.95	4	Level	25%	1.5	1.2	0.889	1.00	1,409	65	0.60	65.0	**21.7**	**C**
1	I5 NB (South of SR-138)	PM	3,720	0.95	4	Level	25%	1.5	1.2	0.889	1.00	1,468	65	0.62	64.9	**22.6**	**C**
2	I5 SB (South of SR-138)	PM	3,090	0.95	4	Level	25%	1.5	1.2	0.889	1.00	1,220	65	0.52	65.0	**18.8**	**C**
3	I5 NB (North of SR-138)	PM	3,570	0.95	4	Level	25%	1.5	1.2	0.889	1.00	1,409	65	0.60	65.0	**21.7**	**C**
4	I5 SB (North of SR-138)	PM	3,230	0.95	4	Level	25%	1.5	1.2	0.889	1.00	1,275	65	0.54	65.0	**19.6**	**C**
2025 Alternative 2																	
1	I5 NB (South of SR-138)	AM	3,060	0.95	4	Level	25%	1.5	1.2	0.889	1.00	1,208	65	0.51	65.0	**18.6**	**C**
2	I5 SB (South of SR-138)	AM	3,850	0.95	4	Level	25%	1.5	1.2	0.889	1.00	1,520	65	0.65	64.8	**23.5**	**C**
3	I5 NB (North of SR-138)	AM	3,330	0.95	4	Level	25%	1.5	1.2	0.889	1.00	1,314	65	0.56	65.0	**20.2**	**C**
4	I5 SB (North of SR-138)	AM	3,560	0.95	4	Level	25%	1.5	1.2	0.889	1.00	1,405	65	0.60	65.0	**21.6**	**C**
1	I5 NB (South of SR-138)	PM	3,710	0.95	4	Level	25%	1.5	1.2	0.889	1.00	1,464	65	0.62	64.9	**22.6**	**C**
2	I5 SB (South of SR-138)	PM	3,090	0.95	4	Level	25%	1.5	1.2	0.889	1.00	1,220	65	0.52	65.0	**18.8**	**C**
3	I5 NB (North of SR-138)	PM	3,560	0.95	4	Level	25%	1.5	1.2	0.889	1.00	1,405	65	0.60	65.0	**21.6**	**C**
4	I5 SB (North of SR-138)	PM	3,230	0.95	4	Level	25%	1.5	1.2	0.889	1.00	1,275	65	0.54	65.0	**19.6**	**C**
2040 No Build/TSM																	
1	I5 NB (South of SR-138)	AM	4,080	1.00	4	Level	25%	1.5	1.2	0.889	1.00	1,530	65	0.65	64.8	**23.6**	**C**
2	I5 SB (South of SR-138)	AM	5,450	1.00	4	Level	25%	1.5	1.2	0.889	1.00	2,044	65	0.87	59.1	**34.6**	**D**
3	I5 NB (North of SR-138)	AM	4,400	1.00	4	Level	25%	1.5	1.2	0.889	1.00	1,650	65	0.70	64.1	**25.7**	**C**
4	I5 SB (North of SR-138)	AM	5,040	1.00	4	Level	25%	1.5	1.2	0.889	1.00	1,890	65	0.80	61.6	**30.7**	**D**
1	I5 NB (South of SR-138)	PM	5,400	1.00	4	Level	25%	1.5	1.2	0.889	1.00	2,025	65	0.86	59.5	**34.1**	**D**
2	I5 SB (South of SR-138)	PM	4,310	1.00	4	Level	25%	1.5	1.2	0.889	1.00	1,616	65	0.69	64.3	**25.1**	**C**
3	I5 NB (North of SR-138)	PM	5,270	1.00	4	Level	25%	1.5	1.2	0.889	1.00	1,976	65	0.84	60.3	**32.8**	**D**
4	I5 SB (North of SR-138)	PM	4,430	1.00	4	Level	25%	1.5	1.2	0.889	1.00	1,661	65	0.71	64.0	**25.9**	**C**

HCM 2010
Merge Ramp Junctions
Capacity Analysis

Jurisdiction Los Angeles County
Analysis Year 2020/2025 & 2040
Sceanrio No Build/TSM, Alternative 1 & 2

Agency or Company Metro/Caltrans
Date 6/12/2015
Project Description SR138

General Information				*Freeway Data*				*Freeway Volume Adjustment*							
	Freeway/ Direction	On-ramp	Analysis Time Period	Lanes	FFS (mph)	V_F (vph)	Highway or C-D?	PHF	Terrain	Truck/ Bus %	E_T	E_R	f_{HV}	f_P	Flow Rate v_F (pcph)
Existing Conditions															
1	I5 NB	SR138 NB On-Ramp	AM	4	55	2,260	Yes	0.95	Level	25%	1.5	1.20	0.889	1.00	2,676
2	I5 SB	SR138 SB On-Ramp	AM	4	65	2,250	Yes	0.95	Level	25%	1.5	1.20	0.889	1.00	2,664
1	I5 NB	SR138 NB On-Ramp	PM	4	55	2,135	Yes	0.95	Level	25%	1.5	1.20	0.889	1.00	2,528
2	I5 SB	SR138 SB On-Ramp	PM	4	65	2,130	Yes	0.95	Level	25%	1.5	1.20	0.889	1.00	2,522
2020 No Build/TSM															
1	I5 NB	SR138 NB On-Ramp	AM	4	55	2,550	Yes	0.95	Level	25%	1.5	1.20	0.889	1.00	3,020
2	I5 SB	SR138 SB On-Ramp	AM	4	65	2,740	Yes	0.95	Level	25%	1.5	1.20	0.889	1.00	3,245
1	I5 NB	SR138 NB On-Ramp	PM	4	55	2,690	Yes	0.95	Level	25%	1.5	1.20	0.889	1.00	3,186
2	I5 SB	SR138 SB On-Ramp	PM	4	65	2,510	Yes	0.95	Level	25%	1.5	1.20	0.889	1.00	2,972
2025 Alternative 1															
1	I5 NB	SR138 NB On-Ramp	AM	4	55	2,790	Yes	0.95	Level	25%	1.5	1.20	0.889	1.00	3,304
2	I5 SB	SR138 SB On-Ramp	AM	4	65	2,990	Yes	0.95	Level	25%	1.5	1.20	0.889	1.00	3,541
1	I5 NB	SR138 NB On-Ramp	PM	4	55	2,910	Yes	0.95	Level	25%	1.5	1.20	0.889	1.00	3,446
2	I5 SB	SR138 SB On-Ramp	PM	4	65	2,670	Yes	0.95	Level	25%	1.5	1.20	0.889	1.00	3,162
2025 Alternative 2															
1	I5 NB	SR138 NB On-Ramp	AM	4	55	2,790	Yes	0.95	Level	25%	1.5	1.20	0.889	1.00	3,304
2	I5 SB	SR138 SB On-Ramp	AM	4	65	2,990	Yes	0.95	Level	25%	1.5	1.20	0.889	1.00	3,541
1	I5 NB	SR138 NB On-Ramp	PM	4	55	2,910	Yes	0.95	Level	25%	1.5	1.20	0.889	1.00	3,446
2	I5 SB	SR138 SB On-Ramp	PM	4	65	2,680	Yes	0.95	Level	25%	1.5	1.20	0.889	1.00	3,174
2040 No Build/TSM															
1	I5 NB	SR138 NB On-Ramp	AM	4	55	3,740	Yes	1.00	Level	25%	1.5	1.20	0.889	1.00	4,208
2	I5 SB	SR138 SB On-Ramp	AM	4	65	4,280	Yes	1.00	Level	25%	1.5	1.20	0.889	1.00	4,815
1	I5 NB	SR138 NB On-Ramp	PM	4	55	4,490	Yes	1.00	Level	25%	1.5	1.20	0.889	1.00	5,051
2	I5 SB	SR138 SB On-Ramp	PM	4	65	3,750	Yes	1.00	Level	25%	1.5	1.20	0.889	1.00	4,219

HCM 2010
Merge Ramp Junctions
Capacity Analysis

General Information			Effective	*On-Ramp Data*							*On-Ramp Volume Adjustment*								*Capacity Checks*					
	Freeway/		Flow Rate			S_{FR}	V_R	Accel Lane (ft)					Truck/					Flow Rate	v_{Fi}	Max v_{Fi}		v_{Fo}	Max v_{Fo}	
	Direction	On-ramp	v_p (pcph)	Type	Lanes	(mph)	(vph)	L_{A1}	L_{A2}	L_{Aeff}	PHF	Terrain	Bus %	E_T	E_R	f_{HV}	f_P	v_R (pcph)	(pcph)	(pcph)	LOS F?	(pcph)	(pcph)	LOS F?
Existing Conditions																								
1	I5 NB	SR138 NB On-Ramp	2,676	Major	2	55.0	110			0	0.95	Level	18%	1.5	1.2	0.917	1.00	126	2,676	8,400	No	2,803	8,400	No
2	I5 SB	SR138 SB On-Ramp	2,664	Major	2	55.0	50			0	0.95	Level	18%	1.5	1.2	0.917	1.00	57	2,664	8,800	No	2,722	8,800	No
1	I5 NB	SR138 NB On-Ramp	2,528	Major	2	55.0	160			0	0.95	Level	18%	1.5	1.2	0.917	1.00	184	2,528	8,400	No	2,712	8,400	No
2	I5 SB	SR138 SB On-Ramp	2,522	Major	2	55.0	30			0	0.95	Level	18%	1.5	1.2	0.917	1.00	34	2,522	8,800	No	2,557	8,800	No
2020 No Build/TSM																								
1	I5 NB	SR138 NB On-Ramp	3,020	Major	2	55.0	240			0	0.95	Level	18%	1.5	1.2	0.917	1.00	275	3,020	8,400	No	3,295	8,400	No
2	I5 SB	SR138 SB On-Ramp	3,245	Major	2	55.0	300			0	0.95	Level	18%	1.5	1.2	0.917	1.00	344	3,245	8,800	No	3,589	8,800	No
1	I5 NB	SR138 NB On-Ramp	3,186	Major	2	55.0	300			0	0.95	Level	18%	1.5	1.2	0.917	1.00	344	3,186	8,400	No	3,530	8,400	No
2	I5 SB	SR138 SB On-Ramp	2,972	Major	2	55.0	150			0	0.95	Level	18%	1.5	1.2	0.917	1.00	172	2,972	8,800	No	3,144	8,800	No
2025 Alternative 1																								
1	I5 NB	SR138 NB On-Ramp	3,304	Major	2	55.0	550	1,250		2,500	0.95	Level	13%	1.5	1.2	0.939	1.00	617	3,304	8,400	No	3,921	8,400	No
2	I5 SB	SR138 SB On-Ramp	3,541	Major	2	55.0	880	1,250		2,500	0.95	Level	13%	1.5	1.2	0.939	1.00	987	3,541	8,800	No	4,527	8,800	No
1	I5 NB	SR138 NB On-Ramp	3,446	Major	2	55.0	660	1,250		2,500	0.95	Level	13%	1.5	1.2	0.939	1.00	740	3,446	8,400	No	4,186	8,400	No
2	I5 SB	SR138 SB On-Ramp	3,162	Major	2	55.0	420	1,250		2,500	0.95	Level	13%	1.5	1.2	0.939	1.00	471	3,162	8,800	No	3,633	8,800	No
2025 Alternative 2																								
1	I5 NB	SR138 NB On-Ramp	3,304	Major	2	55.0	540	1,250		2,500	0.95	Level	13%	1.5	1.2	0.939	1.00	605	3,304	8,400	No	3,909	8,400	No
2	I5 SB	SR138 SB On-Ramp	3,541	Major	2	55.0	860	1,250		2,500	0.95	Level	13%	1.5	1.2	0.939	1.00	964	3,541	8,800	No	4,505	8,800	No
1	I5 NB	SR138 NB On-Ramp	3,446	Major	2	55.0	650	1,250		2,500	0.95	Level	13%	1.5	1.2	0.939	1.00	729	3,446	8,400	No	4,175	8,400	No
2	I5 SB	SR138 SB On-Ramp	3,174	Major	2	55.0	410	1,250		2,500	0.95	Level	13%	1.5	1.2	0.939	1.00	460	3,174	8,800	No	3,633	8,800	No
2040 No Build/TSM																								
1	I5 NB	SR138 NB On-Ramp	4,208	Major	2	55.0	660			0	0.95	Level	6%	1.5	1.2	0.971	1.00	716	4,208	8,400	No	4,923	8,400	No
2	I5 SB	SR138 SB On-Ramp	4,815	Major	2	55.0	1,170			0	0.95	Level	6%	1.5	1.2	0.971	1.00	1,269	4,815	8,800	No	6,084	8,800	No
1	I5 NB	SR138 NB On-Ramp	5,051	Major	2	55.0	780			0	0.95	Level	6%	1.5	1.2	0.971	1.00	846	5,051	8,400	No	5,897	8,400	No
2	I5 SB	SR138 SB On-Ramp	4,219	Major	2	55.0	560			0	0.95	Level	6%	1.5	1.2	0.971	1.00	607	4,219	8,800	No	4,826	8,800	No

HCM 2010
Merge Ramp Junctions
Capacity Analysis

General Information													*Results*	
	Freeway/ Direction	On-ramp	v_3, v_{av34} (pcphpl)	v_3, v_{av34} > 2,700?	v_3, v_{av34} >1.5*v_{12}/2?	v_{12a} (pcph)	v_{R12a} (pcph)	Max v_{R12a} (pcph)	Exceeds Max v_{R12a}?	v_R (pcph)	Max v_R (pcph)	LOS F?	Density, D (pcplpm)	Level of Service
Existing Conditions														
1	I5 NB	SR138 NB On-Ramp	1,058	No	Yes	1,071	1,197	4,600	No	126	4,500	No	14.8	**B**
2	I5 SB	SR138 SB On-Ramp	1,054	No	Yes	1,066	1,123	4,600	No	57	4,500	No	14.2	**B**
1	I5 NB	SR138 NB On-Ramp	1,000	No	Yes	1,011	1,195	4,600	No	184	4,500	No	14.7	**B**
2	I5 SB	SR138 SB On-Ramp	998	No	Yes	1,009	1,043	4,600	No	34	4,500	No	13.6	**B**
2020 No Build/TSM														
1	I5 NB	SR138 NB On-Ramp	1,194	No	Yes	1,208	1,483	4,600	No	275	4,500	No	16.9	**B**
2	I5 SB	SR138 SB On-Ramp	1,283	No	Yes	1,298	1,642	4,600	No	344	4,500	No	18.1	**B**
1	I5 NB	SR138 NB On-Ramp	1,260	No	Yes	1,274	1,618	4,600	No	344	4,500	No	17.9	**B**
2	I5 SB	SR138 SB On-Ramp	1,176	No	Yes	1,189	1,361	4,600	No	172	4,500	No	16.0	**B**
2025 Alternative 1														
1	I5 NB	SR138 NB On-Ramp	1,307	No	Yes	1,322	1,938	4,600	No	617	4,500	No	4.6	**A**
2	I5 SB	SR138 SB On-Ramp	1,400	No	Yes	1,416	2,403	4,600	No	987	4,500	No	8.1	**A**
1	I5 NB	SR138 NB On-Ramp	1,363	No	Yes	1,378	2,118	4,600	No	740	4,500	No	6.0	**A**
2	I5 SB	SR138 SB On-Ramp	1,251	No	Yes	1,265	1,736	4,600	No	471	4,500	No	3.1	**A**
2025 Alternative 2														
1	I5 NB	SR138 NB On-Ramp	1,307	No	Yes	1,322	1,927	4,600	No	605	4,500	No	4.6	**A**
2	I5 SB	SR138 SB On-Ramp	1,400	No	Yes	1,416	2,380	4,600	No	964	4,500	No	7.9	**A**
1	I5 NB	SR138 NB On-Ramp	1,363	No	Yes	1,378	2,107	4,600	No	729	4,500	No	5.9	**A**
2	I5 SB	SR138 SB On-Ramp	1,255	No	Yes	1,269	1,729	4,600	No	460	4,500	No	3	**A**
2040 No Build/TSM														
1	I5 NB	SR138 NB On-Ramp	1,664	No	Yes	1,683	2,399	4,600	No	716	4,500	No	23.9	**C**
2	I5 SB	SR138 SB On-Ramp	1,904	No	Yes	1,926	3,195	4,600	No	1,269	4,500	No	29.8	**D**
1	I5 NB	SR138 NB On-Ramp	1,998	No	Yes	2,021	2,866	4,600	No	846	4,500	No	27.4	**C**
2	I5 SB	SR138 SB On-Ramp	1,669	No	Yes	1,688	2,295	4,600	No	607	4,500	No	23.1	**C**

HCM 2010
Diverge Ramp Junctions
Capacity Analysis

Jurisdiction LA County
Analysis Year 2020/2025 & 2040
Sceanrio No Build/TSM, Alternative 1 & 2

Agency Metro/Caltrans
Date 6/12/2015
Project Description SR138

General Information			*Mainline Data*				*Mainline Volume Adjustment*			Effective
Freeway/ Direction	Off-ramp	Analysis Time Period	Lanes	FFS (mph)	V_F (vph)	Highway or C-D?	PHF	Terrain	Truck/ Bus %	Flow Rate v_p (pcph)
Existing										
1	SB I5 to SR138 EB	AM	4	65	2,370	Yes	0.95	Level	25%	2,807
2	NB I5 to SR138 EB	AM	4	55	2,220	Yes	0.95	Level	25%	2,629
1	SB I5 to SR138 EB	PM	4	65	2,250	Yes	0.95	Level	25%	2,664
2	NB I5 to SR138 EB	PM	4	55	2,210	Yes	0.95	Level	25%	2,617
2020 No Build/TSM										
1	SB I5 to SR138 EB	AM	4	65	2,990	Yes	0.95	Level	25%	3,541
2	NB I5 to SR138 EB	AM	4	55	2,650	Yes	0.95	Level	25%	3,138
1	SB I5 to SR138 EB	PM	4	65	2,750	Yes	0.95	Level	25%	3,257
2	NB I5 to SR138 EB	PM	4	55	2,990	Yes	0.95	Level	25%	3,541
2025 Alternative 1										
1	SB I5 to SR138 EB	AM	4	65	3,570	Yes	0.95	Level	25%	4,228
2	NB I5 to SR138 EB	AM	4	55	3,060	Yes	0.95	Level	25%	3,624
1	SB I5 to SR138 EB	PM	4	65	3,230	Yes	0.95	Level	25%	3,825
2	NB I5 to SR138 EB	PM	4	55	3,720	Yes	0.95	Level	25%	4,405
2025 Alternative 2										
1	SB I5 to SR138 EB	AM	4	65	3,560	Yes	0.95	Level	25%	4,216
2	NB I5 to SR138 EB	AM	4	55	3,060	Yes	0.95	Level	25%	3,624
1	SB I5 to SR138 EB	PM	4	65	3,230	Yes	0.95	Level	25%	3,825
2	NB I5 to SR138 EB	PM	4	55	3,710	Yes	0.95	Level	25%	4,393
2040 No Build/TSM										
1	SB I5 to SR138 EB	AM	4	65	5,040	Yes	1.00	Level	25%	5,670
2	NB I5 to SR138 EB	AM	4	55	4,080	Yes	1.00	Level	25%	4,590
1	SB I5 to SR138 EB	PM	4	65	4,430	Yes	1.00	Level	25%	4,984
2	NB I5 to SR138 EB	PM	4	55	5,400	Yes	1.00	Level	25%	6,075

HCM 2010
Diverge Ramp Junctions
Capacity Analysis

General Information		*Off-Ramp Data*						*Off-Ramp Volume Adjustment*									*Capacity Checks*		
Freeway/ Direction	Off-ramp	Type	Lanes	S_{FR} (mph)	V_R (vph)	Decel Lane (ft) L_{D1}	L_{Deff}	PHF	Terrain	Truck/ Bus %	RV %	E_T	E_R	f_{HV}	f_P	Flow Rate v_R (pcph)	v_{Fi} (pcph)	Max v_{Fi} (pcph)	LOS F?
Existing																			
1	SB I5 to SR138 EB	Major	1	55.0	120		0	0.95	Level	18%		1.5	1.2	0.917	1.00	138	2,807	8,800	No
2	NB I5 to SR138 EB	Major	1	55.0	20		0	0.95	Level	18%		1.5	1.2	0.917	1.00	23	2,629	9,000	No
1	SB I5 to SR138 EB	Major	1	55.0	115		0	0.95	Level	18%		1.5	1.2	0.917	0.85	155	2,664	8,800	No
2	NB I5 to SR138 EB	Major	1	55.0	60		0	0.95	Level	18%		1.5	1.2	0.917	1.00	69	2,617	8,400	No
2020 No Build/TSM																			
1	SB I5 to SR138 EB	Major	1	55.0	250		0	0.95	Level	13%		1.5	1.2	0.939	1.00	280	3,541	8,800	No
2	NB I5 to SR138 EB	Major	1	55.0	100		0	0.95	Level	13%		1.5	1.2	0.939	1.00	112	3,138	9,000	No
1	SB I5 to SR138 EB	Major	1	65.0	245		0	0.95	Level	13%		1.5	1.2	0.939	0.85	323	3,257	8,800	No
2	NB I5 to SR138 EB	Major	1	55.0	300		0	0.95	Level	13%		1.5	1.2	0.939	1.00	336	3,541	8,400	No
2025 Alternative 1																			
1	SB I5 to SR138 EB	Major	1	55.0	580	1,300	1,300	0.95	Level	13%		1.5	1.2	0.939	1.00	650	4,228	8,800	No
2	NB I5 to SR138 EB	Major	1	55.0	270	1,300	1,300	0.95	Level	13%		1.5	1.2	0.939	1.00	303	3,624	9,000	No
1	SB I5 to SR138 EB	Major	1	55.0	560	1,300	1,300	0.95	Level	13%		1.5	1.2	0.939	0.85	739	3,825	8,800	No
2	NB I5 to SR138 EB	Major	1	55.0	810	1,300	1,300	0.95	Level	13%		1.5	1.2	0.939	1.00	908	4,405	8,400	No
2025 Alternative 2																			
1	SB I5 to SR138 EB	Major	1	55.0	570	1,300	1,300	0.95	Level	13%		1.5	1.2	0.939	1.00	639	4,216	8,800	No
2	NB I5 to SR138 EB	Major	1	55.0	260	1,300	1,300	0.95	Level	13%		1.5	1.2	0.939	1.00	291	3,624	9,000	No
1	SB I5 to SR138 EB	Major	1	55.0	550	1,300	1,300	0.95	Level	13%		1.5	1.2	0.939	0.85	725	3,825	8,800	No
2	NB I5 to SR138 EB	Major	1	55.0	800	1,300	1,300	0.95	Level	13%		1.5	1.2	0.939	1.00	897	4,393	8,400	No
2040 No Build/TSM																			
1	SB I5 to SR138 EB	Major	1	55.0	700		0	1.00	Level	6%		1.5	1.2	0.971	1.00	721	5,670	8,800	No
2	NB I5 to SR138 EB	Major	1	55.0	350		0	1.00	Level	6%		1.5	1.2	0.971	1.00	361	4,590	9,000	No
1	SB I5 to SR138 EB	Major	1	55.0	680		0	1.00	Level	6%		1.5	1.2	0.971	0.85	824	4,984	8,800	No
2	NB I5 to SR138 EB	Major	1	55.0	1100		0	1.00	Level	6%		1.5	1.2	0.971	1.00	1,133	6,075	8,400	No

HCM 2010
Diverge Ramp Junctions
Capacity Analysis

General Information *Results*

Freeway/ Direction	Off-ramp	v_3, v_{av34} (pcphpl)	v_3, v_{av34} > 2,700?	v_3, v_{av34} >1.5*v_{12}/2?	v_{12a} (pcph)	Max v_{12a} (pcph)	Exceeds Max v_{12a}?	v_{Fo} (pcph)	Max v_{Fo} (pcph)	LOS F?	v_R (pcph)	Max v_R (pcph)	LOS F?	Density, D (pcplpm)	Level of Service
Existing															
1	SB I5 to SR138 EB	753	No	No	1,301	4,400	No	2,669	8,800	No	138	2,250	No	**12.3**	**B**
2	NB I5 to SR138 EB	735	No	No	1,159	4,400	No	2,606	8,400	No	23	2,200	No	**7.2**	**A**
1	SB I5 to SR138 EB	708	No	No	1,249	4,400	No	2,510	8,800	No	155	2,250	No	**11.7**	**B**
2	NB I5 to SR138 EB	719	No	No	1,180	4,400	No	2,548	8,400	No	69	2,250	No	**11.4**	**B**
2020 No Build/TSM															
1	SB I5 to SR138 EB	919	No	No	1,702	4,400	No	3,261	8,800	No	280	2,250	No	**15.5**	**B**
2	NB I5 to SR138 EB	853	No	No	1,431	4,400	No	3,026	8,400	No	112	2,200	No	**8.6**	**A**
1	SB I5 to SR138 EB	827	No	No	1,602	4,400	No	2,933	8,800	No	323	2,350	No	**14.2**	**B**
2	NB I5 to SR138 EB	904	No	No	1,733	4,400	No	3,204	8,400	No	336	2,250	No	**15.5**	**B**
2025 Alternative 1															
1	SB I5 to SR138 EB	1,009	No	No	2,210	4,400	No	3,577	8,800	No	650	2,250	No	**18.5**	**B**
2	NB I5 to SR138 EB	937	No	No	1,751	4,400	No	3,321	8,400	No	303	2,200	No	**9.9**	**A**
1	SB I5 to SR138 EB	870	No	No	2,084	4,400	No	3,086	8,800	No	739	2,250	No	**16.7**	**B**
2	NB I5 to SR138 EB	986	No	No	2,433	4,400	No	3,497	8,400	No	908	2,250	No	**19.3**	**B**
2025 Alternative 2															
1	SB I5 to SR138 EB	1,009	No	No	2,198	4,400	No	3,577	8,800	No	639	2,250	No	**18.4**	**B**
2	NB I5 to SR138 EB	940	No	No	1,744	4,400	No	3,332	8,400	No	291	2,200	No	**9.9**	**A**
1	SB I5 to SR138 EB	874	No	No	2,077	4,400	No	3,100	8,800	No	725	2,250	No	**16.7**	**B**
2	NB I5 to SR138 EB	986	No	No	2,421	4,400	No	3,497	8,400	No	897	2,250	No	**19.2**	**B**
2040 No Build/TSM															
1	SB I5 to SR138 EB	1,396	No	No	2,879	4,400	No	4,949	8,800	No	721	2,250	No	**24.8**	**C**
2	NB I5 to SR138 EB	1,193	No	No	2,205	4,400	No	4,230	8,400	No	361	2,200	No	**12.5**	**B**
1	SB I5 to SR138 EB	1,173	No	No	2,638	4,400	No	4,160	8,800	No	824	2,250	No	**21.8**	**C**
2	NB I5 to SR138 EB	1,394	No	No	3,288	4,400	No	4,942	8,400	No	1,133	2,250	No	**26.6**	**C**

VISSIM Anlysis Results for I-5 and SR-138 Under Design Year 2040 Conditions

Year 2040 Alternative 1 & Alternative 2 - AM Peak Hour																	
		Facility	Entering Lanes		Mainline Volume (vph)			On-ramp Volume (vph)			Off-ramp Volume (vph)			Speed (mph)		Density (vplpm)		
	Location	Type	ML	On	Avg.	St. Dev.	%	Avg.	St. Dev.	%	Avg.	St. Dev.	%	Avg.	St. Dev.	Avg.	St. Dev.	LOS
1	I-5 NB Off-Ramp to SR-138	Diverge	5	0	4,208	104	100.0%				595	44	99.2%	52.6	0.6	14.3	0.7	B
2	I-5 NB On-Ramp from SR-138	Merge	4	1	3,602	82	99.8%	1,133	48	99.4%				52.6	0.5	21.0	0.6	C
3	I-5 SB Off-Ramp to SR-138	Diverge	5	0	5,206	118	100.1%				1,196	59	99.6%	59.0	0.5	20.0	0.5	C
4	I-5 SB On-Ramp from SR-138	Merge	4	1	4,016	98	100.4%	2,016	79	100.3%				58.5	0.5	26.4	0.9	C
5	I-5 NB South of SR-138	Basic	4	0	4,214	102	100.1%							55.1	0.2	18.9	0.5	C
6	I-5 NB North of SR-138	Basic	4	0	4,736	102	99.7%							55.1	0.2	21.9	0.5	C
7	I-5 SB North of SR-138	Basic	4	0	5,198	119	100.0%							59.8	0.7	23.9	0.7	C
8	I-5 SB South of SR-138	Basic	4	0	6,038	111	100.5%							60.3	0.2	25.4	0.5	C

Note: Forecasts between Alternatives 1 and 2 are very similar. Alternative 1, the ultimate buildout scenario with the highest forecasts was used to produce the LOS results using VISSIM.

Year 2040 Alternative 1 & Alternative 2 - PM Peak Hour																	
		Facility	Entering Lanes		Mainline Volume (vph)			On-ramp Volume (vph)			Off-ramp Volume (vph)			Speed (mph)		Density (vplpm)		
	Location	Type	ML	On	Avg.	St. Dev.	%	Avg.	St. Dev.	%	Avg.	St. Dev.	%	Avg.	St. Dev.	Avg.	St. Dev.	LOS
1	I-5 NB Off-Ramp to SR-138	Diverge	5	0	5,758	128	99.8%				1,828	96	99.4%	50.1	1.6	24.9	1.2	C
2	I-5 NB On-Ramp from SR-138	Merge	4	1	3,935	75	100.1%	1,342	46	99.4%				51.0	0.3	25.3	0.8	C
3	I-5 SB Off-Ramp to SR-138	Diverge	5	0	4,581	113	100.2%				1,166	69	99.7%	59.6	0.4	18.8	0.4	B
4	I-5 SB On-Ramp from SR-138	Merge	4	1	3,416	103	100.5%	967	52	100.7%				59.5	0.2	18.1	0.5	B
5	I-5 NB South of SR-138	Basic	4	0	5,771	127	100.0%							50.8	1.2	29.3	1.4	D
6	I-5 NB North of SR-138	Basic	4	0	5,279	113	100.0%							53.8	0.3	24.8	0.6	C
7	I-5 SB North of SR-138	Basic	4	0	4,566	113	99.9%							60.3	0.3	21.7	0.4	C
8	I-5 SB South of SR-138	Basic	4	0	4,385	111	100.6%							61.1	0.2	18.1	0.4	C

Note: Forecasts between Alternatives 1 and 2 are very similar. Alternative 1, the ultimate buildout scenario with the highest forecasts was used to produce the LOS results using VISSIM.

Appendix F
Intersection LOS Worksheets – Existing Conditions

HCM Unsignalized Intersection Capacity Analysis
3: SR-138 & Gorman Post Road

3/31/2014

Movement	EBL	EBT	WBT	WBR	SBL	SBR
Lane Configurations						
Volume (veh/h)	3	138	115	6	15	1
Sign Control		Free	Free		Stop	
Grade		0%	0%		0%	
Peak Hour Factor	0.87	0.87	0.87	0.87	0.87	0.87
Hourly flow rate (vph)	3	159	132	3	17	1
Pedestrians						
Lane Width (ft)						
Walking Speed (ft/s)						
Percent Blockage						
Right turn flare (veh)						
Median type		None	None			
Median storage veh)						
Upstream signal (ft)						
pX, platoon unblocked						
vC, conflicting volume	136				220	68
vC1, stage 1 conf vol						
vC2, stage 2 conf vol						
vCu, unblocked vol	136				220	68
tC, single (s)	4.8				6.8	6.9
tC, 2 stage (s)						
tF (s)	2.6				3.5	3.3
p0 queue free %	100				98	100
cM capacity (veh/h)	1236				746	982

Direction, Lane #	EB 1	EB 2	EB 3	WB 1	WB 2	SB 1
Volume Total	3	79	79	88	48	18
Volume Left	3	0	0	0	0	17
Volume Right	0	0	0	0	3	1
cSH	1236	1700	1700	1700	1700	757
Volume to Capacity	0.00	0.05	0.05	0.05	0.03	0.02
Queue Length 95th (ft)	0	0	0	0	0	2
Control Delay (s)	7.9	0.0	0.0	0.0	0.0	9.9
Lane LOS	A					A
Approach Delay (s)	0.2			0.0		9.9
Approach LOS						A

Intersection Summary			
Average Delay	0.7		
Intersection Capacity Utilization	13.8%	ICU Level of Service	A
Analysis Period (min)	15		

Movement	EBT	EBR	WBL	WBT	NBL	NBR
Lane Configurations						
Volume (veh/h)	140	3	0	119	2	0
Sign Control	Free			Free	Stop	
Grade	0%			0%	0%	
Peak Hour Factor	0.79	0.79	0.79	0.79	0.79	0.79
Hourly flow rate (vph)	177	4	0	151	3	0
Pedestrians						
Lane Width (ft)						
Walking Speed (ft/s)						
Percent Blockage						
Right turn flare (veh)						
Median type	None			None		
Median storage veh)						
Upstream signal (ft)						
pX, platoon unblocked						
vC, conflicting volume			181		330	179
vC1, stage 1 conf vol						
vC2, stage 2 conf vol						
vCu, unblocked vol			181		330	179
tC, single (s)			4.5		6.4	6.2
tC, 2 stage (s)						
tF (s)			2.6		3.5	3.3
p0 queue free %			100		100	100
cM capacity (veh/h)			1191		665	864

Direction, Lane #	EB 1	WB 1	NB 1
Volume Total	181	151	3
Volume Left	0	0	3
Volume Right	4	0	0
cSH	1700	1191	665
Volume to Capacity	0.11	0.00	0.00
Queue Length 95th (ft)	0	0	0
Control Delay (s)	0.0	0.0	10.4
Lane LOS			B
Approach Delay (s)	0.0	0.0	10.4
Approach LOS			B

Intersection Summary			
Average Delay	0.1		
Intersection Capacity Utilization	17.6%	ICU Level of Service	A
Analysis Period (min)	15		

Movement	EBL	EBT	WBT	WBR	SBL	SBR
Lane Configurations						
Volume (veh/h)	52	76	96	11	0	16
Sign Control		Free	Free		Stop	
Grade		0%	0%		0%	
Peak Hour Factor	0.72	0.72	0.72	0.72	0.72	0.72
Hourly flow rate (vph)	72	106	133	15	0	22
Pedestrians						
Lane Width (ft)						
Walking Speed (ft/s)						
Percent Blockage						
Right turn flare (veh)						
Median type		None	None			
Median storage veh)						
Upstream signal (ft)						
pX, platoon unblocked						
vC, conflicting volume	149				391	141
vC1, stage 1 conf vol						
vC2, stage 2 conf vol						
vCu, unblocked vol	149				391	141
tC, single (s)	4.4				6.4	6.2
tC, 2 stage (s)						
tF (s)	2.5				3.5	3.3
p0 queue free %	94				100	98
cM capacity (veh/h)	1278				578	907

Direction, Lane #	EB 1	WB 1	SB 1
Volume Total	178	149	22
Volume Left	72	0	0
Volume Right	0	15	22
cSH	1278	1700	907
Volume to Capacity	0.06	0.09	0.02
Queue Length 95th (ft)	4	0	2
Control Delay (s)	3.5	0.0	9.1
Lane LOS	A		A
Approach Delay (s)	3.5	0.0	9.1
Approach LOS			A

Intersection Summary			
Average Delay	2.4		
Intersection Capacity Utilization	23.5%	ICU Level of Service	A
Analysis Period (min)	15		

Movement	EBL	EBT	WBT	WBR	SBL	SBR
Lane Configurations						
Volume (veh/h)	0	54	126	1	1	1
Sign Control		Free	Free		Stop	
Grade		0%	0%		0%	
Peak Hour Factor	0.92	0.92	0.92	0.92	0.92	0.92
Hourly flow rate (vph)	0	59	137	1	1	1
Pedestrians						
Lane Width (ft)						
Walking Speed (ft/s)						
Percent Blockage						
Right turn flare (veh)						
Median type		None	None			
Median storage veh)						
Upstream signal (ft)						
pX, platoon unblocked						
vC, conflicting volume	138				196	138
vC1, stage 1 conf vol						
vC2, stage 2 conf vol						
vCu, unblocked vol	138				196	138
tC, single (s)	4.4				6.4	6.2
tC, 2 stage (s)						
tF (s)	2.5				3.5	3.3
p0 queue free %	100				100	100
cM capacity (veh/h)	1290				793	911

Direction, Lane #	EB 1	WB 1	SB 1
Volume Total	59	138	2
Volume Left	0	0	1
Volume Right	0	1	1
cSH	1290	1700	848
Volume to Capacity	0.00	0.08	0.00
Queue Length 95th (ft)	0	0	0
Control Delay (s)	0.0	0.0	9.3
Lane LOS			A
Approach Delay (s)	0.0	0.0	9.3
Approach LOS			A

Intersection Summary			
Average Delay	0.1		
Intersection Capacity Utilization	16.7%	ICU Level of Service	A
Analysis Period (min)	15		

Movement	EBL	EBT	WBT	WBR	SBL	SBR
Lane Configurations						
Volume (veh/h)	1	58	135	1	1	2
Sign Control		Free	Free		Stop	
Grade		0%	0%		0%	
Peak Hour Factor	0.95	0.95	0.95	0.95	0.95	0.95
Hourly flow rate (vph)	1	61	142	1	1	2
Pedestrians						
Lane Width (ft)						
Walking Speed (ft/s)						
Percent Blockage						
Right turn flare (veh)						
Median type		None	None			
Median storage veh)						
Upstream signal (ft)						
pX, platoon unblocked						
vC, conflicting volume	143				206	143
vC1, stage 1 conf vol						
vC2, stage 2 conf vol						
vCu, unblocked vol	143				206	143
tC, single (s)	4.4				6.4	6.2
tC, 2 stage (s)						
tF (s)	2.5				3.5	3.3
p0 queue free %	100				100	100
cM capacity (veh/h)	1285				782	905

Direction, Lane #	EB 1	WB 1	SB 1
Volume Total	62	143	3
Volume Left	1	0	1
Volume Right	0	1	2
cSH	1285	1700	860
Volume to Capacity	0.00	0.08	0.00
Queue Length 95th (ft)	0	0	0
Control Delay (s)	0.1	0.0	9.2
Lane LOS	A		A
Approach Delay (s)	0.1	0.0	9.2
Approach LOS			A

Intersection Summary			
Average Delay		0.2	
Intersection Capacity Utilization		17.2%	ICU Level of Service A
Analysis Period (min)		15	

Movement	EBL	EBT	WBT	WBR	SBL	SBR
Lane Configurations						
Volume (veh/h)	0	61	143	0	0	0
Sign Control		Free	Free		Stop	
Grade		0%	0%		0%	
Peak Hour Factor	0.97	0.97	0.97	0.97	0.97	0.97
Hourly flow rate (vph)	0	63	147	0	0	0
Pedestrians						
Lane Width (ft)						
Walking Speed (ft/s)						
Percent Blockage						
Right turn flare (veh)						
Median type		None	None			
Median storage veh)						
Upstream signal (ft)						
pX, platoon unblocked						
vC, conflicting volume	147				210	147
vC1, stage 1 conf vol						
vC2, stage 2 conf vol						
vCu, unblocked vol	147				210	147
tC, single (s)	4.4				6.4	6.2
tC, 2 stage (s)						
tF (s)	2.5				3.5	3.3
p0 queue free %	100				100	100
cM capacity (veh/h)	1280				778	899

Direction, Lane #	EB 1	WB 1	SB 1
Volume Total	63	147	0
Volume Left	0	0	0
Volume Right	0	0	0
cSH	1280	1700	1700
Volume to Capacity	0.00	0.09	0.00
Queue Length 95th (ft)	0	0	0
Control Delay (s)	0.0	0.0	0.0
Lane LOS			A
Approach Delay (s)	0.0	0.0	0.0
Approach LOS			A

Intersection Summary			
Average Delay	0.0		
Intersection Capacity Utilization	10.9%	ICU Level of Service	A
Analysis Period (min)	15		

Movement	EBL	EBT	EBR	WBL	WBT	WBR	NBL	NBT	NBR	SBL	SBT	SBR
Lane Configurations												
Volume (veh/h)	1	76	0	4	104	2	4	0	3	4	0	2
Sign Control		Free			Free			Stop			Stop	
Grade		0%			0%			0%			0%	
Peak Hour Factor	0.79	0.79	0.79	0.79	0.79	0.79	0.79	0.79	0.79	0.79	0.79	0.79
Hourly flow rate (vph)	1	96	0	5	132	3	5	0	4	5	0	3
Pedestrians												
Lane Width (ft)												
Walking Speed (ft/s)												
Percent Blockage												
Right turn flare (veh)												
Median type		None			None							
Median storage veh)												
Upstream signal (ft)												
pX, platoon unblocked												
vC, conflicting volume	134			96			244	243	96	246	242	133
vC1, stage 1 conf vol												
vC2, stage 2 conf vol												
vCu, unblocked vol	134			96			244	243	96	246	242	133
tC, single (s)	4.4			4.5			7.1	6.5	6.2	7.1	6.5	6.2
tC, 2 stage (s)												
tF (s)	2.5			2.6			3.5	4.0	3.3	3.5	4.0	3.3
p0 queue free %	100			100			99	100	100	99	100	100
cM capacity (veh/h)	1295			1295			705	656	960	703	657	916

Direction, Lane #	EB 1	WB 1	NB 1	SB 1
Volume Total	97	139	9	8
Volume Left	1	5	5	5
Volume Right	0	3	4	3
cSH	1295	1295	796	762
Volume to Capacity	0.00	0.00	0.01	0.01
Queue Length 95th (ft)	0	0	1	1
Control Delay (s)	0.1	0.3	9.6	9.8
Lane LOS	A	A	A	A
Approach Delay (s)	0.1	0.3	9.6	9.8
Approach LOS			A	A

Intersection Summary			
Average Delay	0.8		
Intersection Capacity Utilization	18.0%	ICU Level of Service	A
Analysis Period (min)	15		

Movement	EBL	EBT	WBT	WBR	SBL	SBR
Lane Configurations						
Volume (veh/h)	16	63	101	8	21	21
Sign Control		Free	Free		Stop	
Grade		0%	0%		0%	
Peak Hour Factor	0.79	0.79	0.79	0.79	0.79	0.79
Hourly flow rate (vph)	20	80	128	10	27	27
Pedestrians						
Lane Width (ft)						
Walking Speed (ft/s)						
Percent Blockage						
Right turn flare (veh)						
Median type		None	None			
Median storage veh)						
Upstream signal (ft)						
pX, platoon unblocked						
vC, conflicting volume	138				253	133
vC1, stage 1 conf vol						
vC2, stage 2 conf vol						
vCu, unblocked vol	138				253	133
tC, single (s)	4.4				6.4	6.2
tC, 2 stage (s)						
tF (s)	2.5				3.5	3.3
p0 queue free %	98				96	97
cM capacity (veh/h)	1291				724	916

Direction, Lane #	EB 1	WB 1	SB 1
Volume Total	100	138	53
Volume Left	20	0	27
Volume Right	0	10	27
cSH	1291	1700	809
Volume to Capacity	0.02	0.08	0.07
Queue Length 95th (ft)	1	0	5
Control Delay (s)	1.7	0.0	9.8
Lane LOS	A		A
Approach Delay (s)	1.7	0.0	9.8
Approach LOS			A

Intersection Summary			
Average Delay	2.4		
Intersection Capacity Utilization	20.9%	ICU Level of Service	A
Analysis Period (min)	15		

Movement	EBL	EBT	WBT	WBR	SBL	SBR
Lane Configurations						
Volume (veh/h)	1	66	104	0	2	1
Sign Control		Free	Free		Stop	
Grade		0%	0%		0%	
Peak Hour Factor	0.92	0.92	0.92	0.92	0.92	0.92
Hourly flow rate (vph)	1	72	113	0	2	1
Pedestrians						
Lane Width (ft)						
Walking Speed (ft/s)						
Percent Blockage						
Right turn flare (veh)						
Median type		None	None			
Median storage veh)						
Upstream signal (ft)						
pX, platoon unblocked						
vC, conflicting volume	113				187	113
vC1, stage 1 conf vol						
vC2, stage 2 conf vol						
vCu, unblocked vol	113				187	113
tC, single (s)	4.4				6.4	6.2
tC, 2 stage (s)						
tF (s)	2.5				3.5	3.3
p0 queue free %	100				100	100
cM capacity (veh/h)	1304				802	940

Direction, Lane #	EB 1	WB 1	SB 1
Volume Total	73	113	3
Volume Left	1	0	2
Volume Right	0	0	1
cSH	1304	1700	843
Volume to Capacity	0.00	0.07	0.00
Queue Length 95th (ft)	0	0	0
Control Delay (s)	0.1	0.0	9.3
Lane LOS	A		A
Approach Delay (s)	0.1	0.0	9.3
Approach LOS			A

Intersection Summary			
Average Delay	0.2		
Intersection Capacity Utilization	15.5%	ICU Level of Service	A
Analysis Period (min)	15		

Movement	EBL	EBT	EBR	WBL	WBT	WBR	NBL	NBT	NBR	SBL	SBT	SBR
Lane Configurations												
Volume (veh/h)	0	63	0	0	89	0	1	0	2	0	0	0
Sign Control		Free			Free			Stop			Stop	
Grade		0%			0%			0%			0%	
Peak Hour Factor	0.74	0.74	0.74	0.74	0.74	0.74	0.74	0.74	0.74	0.74	0.74	0.74
Hourly flow rate (vph)	0	85	0	0	120	0	1	0	3	0	0	0
Pedestrians												
Lane Width (ft)												
Walking Speed (ft/s)												
Percent Blockage												
Right turn flare (veh)												
Median type		None			None							
Median storage veh)												
Upstream signal (ft)												
pX, platoon unblocked												
vC, conflicting volume	120			85			205	205	85	208	205	120
vC1, stage 1 conf vol												
vC2, stage 2 conf vol												
vCu, unblocked vol	120			85			205	205	85	208	205	120
tC, single (s)	4.4			4.5			7.1	6.5	6.2	7.1	6.5	6.2
tC, 2 stage (s)												
tF (s)	2.5			2.6			3.5	4.0	3.3	3.5	4.0	3.3
p0 queue free %	100			100			100	100	100	100	100	100
cM capacity (veh/h)	1296			1298			752	691	974	747	691	931

Direction, Lane #	EB 1	WB 1	NB 1	SB 1
Volume Total	85	120	4	0
Volume Left	0	0	1	0
Volume Right	0	0	3	0
cSH	1296	1298	887	1700
Volume to Capacity	0.00	0.00	0.00	0.00
Queue Length 95th (ft)	0	0	0	0
Control Delay (s)	0.0	0.0	9.1	0.0
Lane LOS			A	A
Approach Delay (s)	0.0	0.0	9.1	0.0
Approach LOS			A	A

Intersection Summary			
Average Delay	0.2		
Intersection Capacity Utilization	14.7%	ICU Level of Service	A
Analysis Period (min)	15		

Movement	EBL	EBT	EBR	WBL	WBT	WBR	NBL	NBT	NBR	SBL	SBT	SBR
Lane Configurations												
Volume (veh/h)	0	63	0	0	89	3	1	0	1	4	0	0
Sign Control		Free			Free			Stop			Stop	
Grade		0%			0%			0%			0%	
Peak Hour Factor	0.79	0.79	0.79	0.79	0.79	0.79	0.79	0.79	0.79	0.79	0.79	0.79
Hourly flow rate (vph)	0	80	0	0	113	4	1	0	1	5	0	0
Pedestrians												
Lane Width (ft)												
Walking Speed (ft/s)												
Percent Blockage												
Right turn flare (veh)												
Median type		None			None							
Median storage veh)												
Upstream signal (ft)												
pX, platoon unblocked												
vC, conflicting volume	116			80			194	196	80	196	194	115
vC1, stage 1 conf vol												
vC2, stage 2 conf vol												
vCu, unblocked vol	116			80			194	196	80	196	194	115
tC, single (s)	4.4			4.5			7.1	6.5	6.2	7.1	6.5	6.2
tC, 2 stage (s)												
tF (s)	2.5			2.6			3.5	4.0	3.3	3.5	4.0	3.3
p0 queue free %	100			100			100	100	100	99	100	100
cM capacity (veh/h)	1310			1314			765	699	981	763	701	938

Direction, Lane #	EB 1	WB 1	NB 1	SB 1
Volume Total	80	116	3	5
Volume Left	0	0	1	5
Volume Right	0	4	1	0
cSH	1310	1314	859	763
Volume to Capacity	0.00	0.00	0.00	0.01
Queue Length 95th (ft)	0	0	0	1
Control Delay (s)	0.0	0.0	9.2	9.8
Lane LOS			A	A
Approach Delay (s)	0.0	0.0	9.2	9.8
Approach LOS			A	A

Intersection Summary			
Average Delay	0.4		
Intersection Capacity Utilization	14.9%	ICU Level of Service	A
Analysis Period (min)	15		

Movement	EBL	EBT	EBR	WBL	WBT	WBR	NBL	NBT	NBR	SBL	SBT	SBR
Lane Configurations												
Volume (veh/h)	11	58	0	0	88	21	0	9	1	1	7	4
Sign Control		Free			Free			Stop			Stop	
Grade		0%			0%			0%			0%	
Peak Hour Factor	0.72	0.72	0.72	0.72	0.72	0.72	0.72	0.72	0.72	0.72	0.72	0.72
Hourly flow rate (vph)	15	81	0	0	122	29	0	12	1	1	10	6
Pedestrians												
Lane Width (ft)												
Walking Speed (ft/s)												
Percent Blockage												
Right turn flare (veh)												
Median type		None			None							
Median storage veh)												
Upstream signal (ft)												
pX, platoon unblocked												
vC, conflicting volume	151			81			258	262	81	256	248	137
vC1, stage 1 conf vol												
vC2, stage 2 conf vol												
vCu, unblocked vol	151			81			258	262	81	256	248	137
tC, single (s)	4.4			4.5			7.1	6.5	6.2	7.1	6.5	6.2
tC, 2 stage (s)												
tF (s)	2.5			2.6			3.5	4.0	3.3	3.5	4.0	3.3
p0 queue free %	99			100			100	98	100	100	98	99
cM capacity (veh/h)	1270			1313			676	635	979	680	647	912

Direction, Lane #	EB 1	WB 1	NB 1	SB 1
Volume Total	96	151	14	17
Volume Left	15	0	0	1
Volume Right	0	29	1	6
cSH	1270	1313	658	719
Volume to Capacity	0.01	0.00	0.02	0.02
Queue Length 95th (ft)	1	0	2	2
Control Delay (s)	1.3	0.0	10.6	10.1
Lane LOS	A		B	B
Approach Delay (s)	1.3	0.0	10.6	10.1
Approach LOS			B	B

Intersection Summary			
Average Delay	1.6		
Intersection Capacity Utilization	20.3%	ICU Level of Service	A
Analysis Period (min)	15		

Movement	EBL	EBT	EBR	WBL	WBT	WBR	NBL	NBT	NBR	SBL	SBT	SBR
Lane Configurations												
Volume (veh/h)	2	56	0	0	111	0	1	0	1	0	1	0
Sign Control		Free			Free			Stop			Stop	
Grade		0%			0%			0%			0%	
Peak Hour Factor	0.77	0.77	0.77	0.77	0.77	0.77	0.77	0.77	0.77	0.77	0.77	0.77
Hourly flow rate (vph)	3	73	0	0	144	0	1	0	1	0	1	0
Pedestrians												
Lane Width (ft)												
Walking Speed (ft/s)												
Percent Blockage												
Right turn flare (veh)												
Median type		None			None							
Median storage veh)												
Upstream signal (ft)												
pX, platoon unblocked												
vC, conflicting volume	144			73			223	222	73	223	222	144
vC1, stage 1 conf vol												
vC2, stage 2 conf vol												
vCu, unblocked vol	144			73			223	222	73	223	222	144
tC, single (s)	4.4			4.5			7.1	6.5	6.2	7.1	6.5	6.2
tC, 2 stage (s)												
tF (s)	2.5			2.5			3.5	4.0	3.3	3.5	4.0	3.3
p0 queue free %	100			100			100	100	100	100	100	100
cM capacity (veh/h)	1288			1337			731	675	989	730	675	903

Direction, Lane #	EB 1	WB 1	NB 1	SB 1
Volume Total	75	144	3	1
Volume Left	3	0	1	0
Volume Right	0	0	1	0
cSH	1288	1337	841	675
Volume to Capacity	0.00	0.00	0.00	0.00
Queue Length 95th (ft)	0	0	0	0
Control Delay (s)	0.3	0.0	9.3	10.3
Lane LOS	A		A	B
Approach Delay (s)	0.3	0.0	9.3	10.3
Approach LOS			A	B

Intersection Summary			
Average Delay	0.3		
Intersection Capacity Utilization	15.8%	ICU Level of Service	A
Analysis Period (min)	15		

Movement	EBL	EBT	EBR	WBL	WBT	WBR	NBL	NBT	NBR	SBL	SBT	SBR
Lane Configurations												
Volume (veh/h)	6	55	4	11	110	13	4	16	11	25	25	4
Sign Control		Free			Free			Stop			Stop	
Grade		0%			0%			0%			0%	
Peak Hour Factor	0.85	0.85	0.85	0.85	0.85	0.85	0.85	0.85	0.85	0.85	0.85	0.85
Hourly flow rate (vph)	7	65	5	13	129	15	5	19	13	29	29	5
Pedestrians												
Lane Width (ft)												
Walking Speed (ft/s)												
Percent Blockage												
Right turn flare (veh)												
Median type		None			None							
Median storage veh)												
Upstream signal (ft)												
pX, platoon unblocked												
vC, conflicting volume	145			69			264	252	67	266	246	137
vC1, stage 1 conf vol												
vC2, stage 2 conf vol												
vCu, unblocked vol	145			69			264	252	67	266	246	137
tC, single (s)	4.4			4.5			7.1	6.5	6.2	7.1	6.5	6.2
tC, 2 stage (s)												
tF (s)	2.5			2.5			3.5	4.0	3.3	3.5	4.0	3.3
p0 queue free %	99			99			99	97	99	96	95	99
cM capacity (veh/h)	1288			1341			654	642	996	655	646	911

Direction, Lane #	EB 1	WB 1	NB 1	SB 1
Volume Total	76	158	36	64
Volume Left	7	13	5	29
Volume Right	5	15	13	5
cSH	1288	1341	737	664
Volume to Capacity	0.01	0.01	0.05	0.10
Queue Length 95th (ft)	0	1	4	8
Control Delay (s)	0.8	0.7	10.1	11.0
Lane LOS	A	A	B	B
Approach Delay (s)	0.8	0.7	10.1	11.0
Approach LOS			B	B

Intersection Summary			
Average Delay	3.7		
Intersection Capacity Utilization	23.6%	ICU Level of Service	A
Analysis Period (min)	15		

Movement	EBL	EBT	EBR	WBL	WBT	WBR	NBL	NBT	NBR	SBL	SBT	SBR
Lane Configurations												
Volume (veh/h)	0	95	0	0	131	0	0	0	5	8	0	2
Sign Control		Free			Free			Stop			Stop	
Grade		0%			0%			0%			0%	
Peak Hour Factor	0.84	0.84	0.84	0.84	0.84	0.84	0.84	0.84	0.84	0.84	0.84	0.84
Hourly flow rate (vph)	0	113	0	0	156	0	0	0	6	10	0	2
Pedestrians												
Lane Width (ft)												
Walking Speed (ft/s)												
Percent Blockage												
Right turn flare (veh)												
Median type		None			None							
Median storage veh)												
Upstream signal (ft)												
pX, platoon unblocked												
vC, conflicting volume	156			113			271	269	113	275	269	156
vC1, stage 1 conf vol												
vC2, stage 2 conf vol												
vCu, unblocked vol	156			113			271	269	113	275	269	156
tC, single (s)	4.4			4.5			7.1	6.5	6.2	7.1	6.5	6.2
tC, 2 stage (s)												
tF (s)	2.5			2.5			3.5	4.0	3.3	3.5	4.0	3.3
p0 queue free %	100			100			100	100	99	99	100	100
cM capacity (veh/h)	1275			1290			679	637	940	673	637	890

Direction, Lane #	EB 1	WB 1	NB 1	SB 1
Volume Total	113	156	6	12
Volume Left	0	0	0	10
Volume Right	0	0	6	2
cSH	1275	1290	940	708
Volume to Capacity	0.00	0.00	0.01	0.02
Queue Length 95th (ft)	0	0	0	1
Control Delay (s)	0.0	0.0	8.9	10.2
Lane LOS			A	B
Approach Delay (s)	0.0	0.0	8.9	10.2
Approach LOS			A	B

Intersection Summary			
Average Delay	0.6		
Intersection Capacity Utilization	20.8%	ICU Level of Service	A
Analysis Period (min)	15		

Movement	EBL	EBT	EBR	WBL	WBT	WBR	NBL	NBT	NBR	SBL	SBT	SBR
Lane Configurations												
Volume (veh/h)	0	114	1	4	120	3	1	0	3	3	3	1
Sign Control		Free			Free			Stop			Stop	
Grade		0%			0%			0%			0%	
Peak Hour Factor	0.92	0.92	0.92	0.92	0.92	0.92	0.92	0.92	0.92	0.92	0.92	0.92
Hourly flow rate (vph)	0	124	1	4	130	3	1	0	3	3	3	1
Pedestrians												
Lane Width (ft)												
Walking Speed (ft/s)												
Percent Blockage												
Right turn flare (veh)												
Median type		None			None							
Median storage veh)												
Upstream signal (ft)												
pX, platoon unblocked												
vC, conflicting volume	134			125			268	267	124	268	266	132
vC1, stage 1 conf vol												
vC2, stage 2 conf vol												
vCu, unblocked vol	134			125			268	267	124	268	266	132
tC, single (s)	4.4			4.5			7.1	6.5	6.2	7.1	6.5	6.2
tC, 2 stage (s)												
tF (s)	2.4			2.5			3.5	4.0	3.3	3.5	4.0	3.3
p0 queue free %	100			100			100	100	100	100	99	100
cM capacity (veh/h)	1316			1276			679	637	926	680	638	917

Direction, Lane #	EB 1	WB 1	NB 1	SB 1
Volume Total	125	138	4	8
Volume Left	0	4	1	3
Volume Right	1	3	3	1
cSH	1316	1276	849	686
Volume to Capacity	0.00	0.00	0.01	0.01
Queue Length 95th (ft)	0	0	0	1
Control Delay (s)	0.0	0.3	9.3	10.3
Lane LOS		A	A	B
Approach Delay (s)	0.0	0.3	9.3	10.3
Approach LOS			A	B

Intersection Summary			
Average Delay	0.6		
Intersection Capacity Utilization	19.7%	ICU Level of Service	A
Analysis Period (min)	15		

Movement	EBL	EBT	EBR	WBL	WBT	WBR	NBL	NBT	NBR	SBL	SBT	SBR
Lane Configurations												
Volume (veh/h)	0	128	1	2	105	2	1	11	2	12	8	0
Sign Control		Free			Free			Stop			Stop	
Grade		0%			0%			0%			0%	
Peak Hour Factor	0.92	0.92	0.92	0.92	0.92	0.92	0.92	0.92	0.92	0.92	0.92	0.92
Hourly flow rate (vph)	0	139	1	2	114	2	1	12	2	13	9	0
Pedestrians												
Lane Width (ft)												
Walking Speed (ft/s)												
Percent Blockage												
Right turn flare (veh)												
Median type		None			None							
Median storage veh)												
Upstream signal (ft)												
pX, platoon unblocked												
vC, conflicting volume	116			140			264	260	140	267	260	115
vC1, stage 1 conf vol												
vC2, stage 2 conf vol												
vCu, unblocked vol	116			140			264	260	140	267	260	115
tC, single (s)	4.4			4.5			7.1	6.5	6.2	7.1	6.5	6.2
tC, 2 stage (s)												
tF (s)	2.4			2.5			3.5	4.0	3.3	3.5	4.0	3.3
p0 queue free %	100			100			100	98	100	98	99	100
cM capacity (veh/h)	1336			1259			681	643	908	673	644	937

Direction, Lane #	EB 1	WB 1	NB 1	SB 1
Volume Total	140	118	15	22
Volume Left	0	2	1	13
Volume Right	1	2	2	0
cSH	1336	1259	674	661
Volume to Capacity	0.00	0.00	0.02	0.03
Queue Length 95th (ft)	0	0	2	3
Control Delay (s)	0.0	0.2	10.5	10.6
Lane LOS		A	B	B
Approach Delay (s)	0.0	0.2	10.5	10.6
Approach LOS			B	B

Intersection Summary			
Average Delay	1.4		
Intersection Capacity Utilization	18.9%	ICU Level of Service	A
Analysis Period (min)	15		

Movement	EBL	EBT	EBR	WBL	WBT	WBR	NBL	NBT	NBR	SBL	SBT	SBR
Lane Configurations												
Volume (veh/h)	1	115	23	1	115	4	10	27	7	3	59	1
Sign Control		Free			Free			Stop			Stop	
Grade		0%			0%			0%			0%	
Peak Hour Factor	0.94	0.94	0.94	0.94	0.94	0.94	0.94	0.94	0.94	0.94	0.94	0.94
Hourly flow rate (vph)	1	122	24	1	122	4	11	29	7	3	63	1
Pedestrians												
Lane Width (ft)												
Walking Speed (ft/s)												
Percent Blockage												
Right turn flare (veh)												
Median type		None			None							
Median storage veh)												
Upstream signal (ft)												
pX, platoon unblocked												
vC, conflicting volume	127			147			296	265	135	285	276	124
vC1, stage 1 conf vol												
vC2, stage 2 conf vol												
vCu, unblocked vol	127			147			296	265	135	285	276	124
tC, single (s)	4.4			4.5			7.1	6.5	6.2	7.1	6.5	6.2
tC, 2 stage (s)												
tF (s)	2.4			2.5			3.5	4.0	3.3	3.5	4.0	3.3
p0 queue free %	100			100			98	96	99	99	90	100
cM capacity (veh/h)	1324			1251			605	639	914	638	631	926

Direction, Lane #	EB 1	WB 1	NB 1	SB 1
Volume Total	148	128	47	67
Volume Left	1	1	11	3
Volume Right	24	4	7	1
cSH	1324	1251	662	634
Volume to Capacity	0.00	0.00	0.07	0.11
Queue Length 95th (ft)	0	0	6	9
Control Delay (s)	0.1	0.1	10.8	11.3
Lane LOS	A	A	B	B
Approach Delay (s)	0.1	0.1	10.8	11.3
Approach LOS			B	B

Intersection Summary			
Average Delay	3.3		
Intersection Capacity Utilization	20.7%	ICU Level of Service	A
Analysis Period (min)	15		

Movement	EBL	EBT	EBR	WBL	WBT	WBR	NBL	NBT	NBR	SBL	SBT	SBR
Lane Configurations												
Volume (veh/h)	0	118	0	0	113	0	3	2	2	0	1	0
Sign Control		Free			Free			Stop			Stop	
Grade		0%			0%			0%			0%	
Peak Hour Factor	0.96	0.96	0.96	0.96	0.96	0.96	0.96	0.96	0.96	0.96	0.96	0.96
Hourly flow rate (vph)	0	123	0	0	118	0	3	2	2	0	1	0
Pedestrians												
Lane Width (ft)												
Walking Speed (ft/s)												
Percent Blockage												
Right turn flare (veh)												
Median type		None			None							
Median storage veh)												
Upstream signal (ft)												
pX, platoon unblocked												
vC, conflicting volume	118			123			241	241	123	244	241	118
vC1, stage 1 conf vol												
vC2, stage 2 conf vol												
vCu, unblocked vol	118			123			241	241	123	244	241	118
tC, single (s)	4.4			4.5			7.1	6.5	6.2	7.1	6.5	6.2
tC, 2 stage (s)												
tF (s)	2.4			2.5			3.5	4.0	3.3	3.5	4.0	3.3
p0 queue free %	100			100			100	100	100	100	100	100
cM capacity (veh/h)	1334			1278			712	661	928	707	661	934

Direction, Lane #	EB 1	WB 1	NB 1	SB 1
Volume Total	123	118	7	1
Volume Left	0	0	3	0
Volume Right	0	0	2	0
cSH	1334	1278	745	661
Volume to Capacity	0.00	0.00	0.01	0.00
Queue Length 95th (ft)	0	0	1	0
Control Delay (s)	0.0	0.0	9.9	10.5
Lane LOS			A	B
Approach Delay (s)	0.0	0.0	9.9	10.5
Approach LOS			A	B

Intersection Summary			
Average Delay	0.3		
Intersection Capacity Utilization	16.2%	ICU Level of Service	A
Analysis Period (min)	15		

Movement	EBL	EBT	EBR	WBL	WBT	WBR	NBL	NBT	NBR	SBL	SBT	SBR
Lane Configurations												
Volume (veh/h)	0	62	58	1	106	0	0	0	0	14	0	7
Sign Control		Free			Free			Stop			Stop	
Grade		0%			0%			0%			0%	
Peak Hour Factor	0.92	0.92	0.92	0.92	0.92	0.92	0.92	0.92	0.92	0.92	0.92	0.92
Hourly flow rate (vph)	0	67	63	1	115	0	0	0	0	15	0	8
Pedestrians												
Lane Width (ft)												
Walking Speed (ft/s)												
Percent Blockage												
Right turn flare (veh)												
Median type		None			None							
Median storage veh)												
Upstream signal (ft)												
pX, platoon unblocked												
vC, conflicting volume	115			67			224	216	99	216	185	115
vC1, stage 1 conf vol												
vC2, stage 2 conf vol												
vCu, unblocked vol	115			67			224	216	99	216	185	115
tC, single (s)	4.5			4.5			7.1	6.5	6.2	7.5	6.5	6.6
tC, 2 stage (s)												
tF (s)	2.5			2.6			3.5	4.0	3.3	3.8	4.0	3.7
p0 queue free %	100			100			100	100	100	98	100	99
cM capacity (veh/h)	1278			1305			725	681	957	669	709	835

Direction, Lane #	EB 1	WB 1	WB 2	SB 1	SB 2
Volume Total	130	1	115	15	8
Volume Left	0	1	0	15	0
Volume Right	63	0	0	0	8
cSH	1700	1305	1700	669	835
Volume to Capacity	0.08	0.00	0.07	0.02	0.01
Queue Length 95th (ft)	0	0	0	2	1
Control Delay (s)	0.0	7.8	0.0	10.5	9.4
Lane LOS		A		B	A
Approach Delay (s)	0.0	0.1		10.1	
Approach LOS				B	

Intersection Summary			
Average Delay	0.9		
Intersection Capacity Utilization	16.8%	ICU Level of Service	A
Analysis Period (min)	15		

Movement	EBL	EBT	EBR	WBL	WBT	WBR	NBL	NBT	NBR	SBL	SBT	SBR
Lane Configurations												
Volume (veh/h)	0	60	16	0	42	15	65	0	6	0	0	0
Sign Control		Free			Free			Stop			Stop	
Grade		0%			0%			0%			0%	
Peak Hour Factor	0.86	0.86	0.86	0.86	0.86	0.86	0.86	0.86	0.86	0.86	0.86	0.86
Hourly flow rate (vph)	0	70	19	0	49	17	76	0	7	0	0	0
Pedestrians												
Lane Width (ft)												
Walking Speed (ft/s)												
Percent Blockage												
Right turn flare (veh)												
Median type		None			None							
Median storage veh)												
Upstream signal (ft)												
pX, platoon unblocked												
vC, conflicting volume	66			88			137	145	79	144	146	58
vC1, stage 1 conf vol												
vC2, stage 2 conf vol												
vCu, unblocked vol	66			88			137	145	79	144	146	58
tC, single (s)	4.5			4.5			7.5	6.5	6.2	7.1	6.5	6.2
tC, 2 stage (s)												
tF (s)	2.5			2.6			3.9	4.0	3.3	3.5	4.0	3.3
p0 queue free %	100			100			90	100	99	100	100	100
cM capacity (veh/h)	1335			1280			747	746	981	820	745	1009

Direction, Lane #	EB 1	WB 1	NB 1	NB 2
Volume Total	88	66	76	7
Volume Left	0	0	76	0
Volume Right	19	17	0	7
cSH	1700	1700	747	981
Volume to Capacity	0.05	0.04	0.10	0.01
Queue Length 95th (ft)	0	0	8	1
Control Delay (s)	0.0	0.0	10.4	8.7
Lane LOS			B	A
Approach Delay (s)	0.0	0.0	10.2	
Approach LOS			B	

Intersection Summary			
Average Delay	3.6		
Intersection Capacity Utilization	14.4%	ICU Level of Service	A
Analysis Period (min)	15		

Movement	EBL	EBT	WBT	WBR	SBL	SBR
Lane Configurations						
Volume (veh/h)	0	165	156	19	10	1
Sign Control		Free	Free		Stop	
Grade		0%	0%		0%	
Peak Hour Factor	0.86	0.86	0.86	0.86	0.86	0.86
Hourly flow rate (vph)	0	192	181	22	12	1
Pedestrians						
Lane Width (ft)						
Walking Speed (ft/s)						
Percent Blockage						
Right turn flare (veh)						
Median type		None	None			
Median storage veh)						
Upstream signal (ft)						
pX, platoon unblocked						
vC, conflicting volume	203				288	102
vC1, stage 1 conf vol						
vC2, stage 2 conf vol						
vCu, unblocked vol	203				288	102
tC, single (s)	4.8				6.8	6.9
tC, 2 stage (s)						
tF (s)	2.6				3.5	3.3
p0 queue free %	100				98	100
cM capacity (veh/h)	1156				679	934

Direction, Lane #	EB 1	EB 2	EB 3	WB 1	WB 2	SB 1
Volume Total	0	96	96	121	83	13
Volume Left	0	0	0	0	0	12
Volume Right	0	0	0	0	22	1
cSH	1700	1700	1700	1700	1700	696
Volume to Capacity	0.00	0.06	0.06	0.07	0.05	0.02
Queue Length 95th (ft)	0	0	0	0	0	1
Control Delay (s)	0.0	0.0	0.0	0.0	0.0	10.3
Lane LOS						B
Approach Delay (s)	0.0			0.0		10.3
Approach LOS						B

Intersection Summary			
Average Delay	0.3		
Intersection Capacity Utilization	14.9%	ICU Level of Service	A
Analysis Period (min)	15		

Movement	EBT	EBR	WBL	WBT	NBL	NBR
Lane Configurations						
Volume (veh/h)	170	2	0	174	4	1
Sign Control	Free			Free	Stop	
Grade	0%			0%	0%	
Peak Hour Factor	0.90	0.90	0.90	0.90	0.90	0.90
Hourly flow rate (vph)	189	2	0	193	4	1
Pedestrians						
Lane Width (ft)						
Walking Speed (ft/s)						
Percent Blockage						
Right turn flare (veh)						
Median type	None			None		
Median storage veh)						
Upstream signal (ft)						
pX, platoon unblocked						
vC, conflicting volume			191		383	190
vC1, stage 1 conf vol						
vC2, stage 2 conf vol						
vCu, unblocked vol			191		383	190
tC, single (s)			4.5		6.4	6.2
tC, 2 stage (s)						
tF (s)			2.6		3.5	3.3
p0 queue free %			100		99	100
cM capacity (veh/h)			1180		619	852

Direction, Lane #	EB 1	WB 1	NB 1
Volume Total	191	193	6
Volume Left	0	0	4
Volume Right	2	0	1
cSH	1700	1180	655
Volume to Capacity	0.11	0.00	0.01
Queue Length 95th (ft)	0	0	1
Control Delay (s)	0.0	0.0	10.5
Lane LOS			B
Approach Delay (s)	0.0	0.0	10.5
Approach LOS			B

Intersection Summary			
Average Delay	0.2		
Intersection Capacity Utilization	19.2%	ICU Level of Service	A
Analysis Period (min)	15		

Movement	EBL	EBT	WBT	WBR	SBL	SBR
Lane Configurations						
Volume (veh/h)	3	168	148	0	14	27
Sign Control		Free	Free		Stop	
Grade		0%	0%		0%	
Peak Hour Factor	0.77	0.77	0.77	0.77	0.77	0.77
Hourly flow rate (vph)	4	218	192	0	18	35
Pedestrians						
Lane Width (ft)						
Walking Speed (ft/s)						
Percent Blockage						
Right turn flare (veh)						
Median type		None	None			
Median storage veh)						
Upstream signal (ft)						
pX, platoon unblocked						
vC, conflicting volume	192				418	192
vC1, stage 1 conf vol						
vC2, stage 2 conf vol						
vCu, unblocked vol	192				418	192
tC, single (s)	4.4				6.4	6.2
tC, 2 stage (s)						
tF (s)	2.5				3.5	3.3
p0 queue free %	100				97	96
cM capacity (veh/h)	1230				589	849

Direction, Lane #	EB 1	WB 1	SB 1
Volume Total	222	192	53
Volume Left	4	0	18
Volume Right	0	0	35
cSH	1230	1700	738
Volume to Capacity	0.00	0.11	0.07
Queue Length 95th (ft)	0	0	6
Control Delay (s)	0.2	0.0	10.3
Lane LOS	A		B
Approach Delay (s)	0.2	0.0	10.3
Approach LOS			B

Intersection Summary			
Average Delay	1.2		
Intersection Capacity Utilization	21.2%	ICU Level of Service	A
Analysis Period (min)	15		

Movement	EBL	EBT	WBT	WBR	SBL	SBR
Lane Configurations						
Volume (veh/h)	1	166	113	4	8	5
Sign Control		Free	Free		Stop	
Grade		0%	0%		0%	
Peak Hour Factor	0.90	0.90	0.90	0.90	0.90	0.90
Hourly flow rate (vph)	1	184	126	4	9	6
Pedestrians						
Lane Width (ft)						
Walking Speed (ft/s)						
Percent Blockage						
Right turn flare (veh)						
Median type		None	None			
Median storage veh)						
Upstream signal (ft)						
pX, platoon unblocked						
vC, conflicting volume	130				314	128
vC1, stage 1 conf vol						
vC2, stage 2 conf vol						
vCu, unblocked vol	130				314	128
tC, single (s)	4.4				6.4	6.2
tC, 2 stage (s)						
tF (s)	2.5				3.5	3.3
p0 queue free %	100				99	99
cM capacity (veh/h)	1300				678	922

Direction, Lane #	EB 1	WB 1	SB 1
Volume Total	186	130	14
Volume Left	1	0	9
Volume Right	0	4	6
cSH	1300	1700	755
Volume to Capacity	0.00	0.08	0.02
Queue Length 95th (ft)	0	0	1
Control Delay (s)	0.1	0.0	9.9
Lane LOS	A		A
Approach Delay (s)	0.1	0.0	9.9
Approach LOS			A

Intersection Summary			
Average Delay	0.5		
Intersection Capacity Utilization	19.5%	ICU Level of Service	A
Analysis Period (min)	15		

Movement	EBL	EBT	WBT	WBR	SBL	SBR
Lane Configurations						
Volume (veh/h)	3	173	119	1	1	0
Sign Control		Free	Free		Stop	
Grade		0%	0%		0%	
Peak Hour Factor	0.92	0.92	0.92	0.92	0.92	0.92
Hourly flow rate (vph)	3	188	129	1	1	0
Pedestrians						
Lane Width (ft)						
Walking Speed (ft/s)						
Percent Blockage						
Right turn flare (veh)						
Median type		None	None			
Median storage veh)						
Upstream signal (ft)						
pX, platoon unblocked						
vC, conflicting volume	130				324	130
vC1, stage 1 conf vol						
vC2, stage 2 conf vol						
vCu, unblocked vol	130				324	130
tC, single (s)	4.4				6.4	6.2
tC, 2 stage (s)						
tF (s)	2.5				3.5	3.3
p0 queue free %	100				100	100
cM capacity (veh/h)	1299				668	920

Direction, Lane #	EB 1	WB 1	SB 1
Volume Total	191	130	1
Volume Left	3	0	1
Volume Right	0	1	0
cSH	1299	1700	668
Volume to Capacity	0.00	0.08	0.00
Queue Length 95th (ft)	0	0	0
Control Delay (s)	0.2	0.0	10.4
Lane LOS	A		B
Approach Delay (s)	0.2	0.0	10.4
Approach LOS			B

Intersection Summary			
Average Delay	0.1		
Intersection Capacity Utilization	21.5%	ICU Level of Service	A
Analysis Period (min)	15		

Movement	EBL	EBT	WBT	WBR	SBL	SBR
Lane Configurations						
Volume (veh/h)	1	178	118	0	0	0
Sign Control		Free	Free		Stop	
Grade		0%	0%		0%	
Peak Hour Factor	0.88	0.88	0.88	0.88	0.88	0.88
Hourly flow rate (vph)	1	202	134	0	0	0
Pedestrians						
Lane Width (ft)						
Walking Speed (ft/s)						
Percent Blockage						
Right turn flare (veh)						
Median type		None	None			
Median storage veh)						
Upstream signal (ft)						
pX, platoon unblocked						
vC, conflicting volume	134				339	134
vC1, stage 1 conf vol						
vC2, stage 2 conf vol						
vCu, unblocked vol	134				339	134
tC, single (s)	4.4				6.4	6.2
tC, 2 stage (s)						
tF (s)	2.5				3.5	3.3
p0 queue free %	100				100	100
cM capacity (veh/h)	1295				656	915

Direction, Lane #	EB 1	WB 1	SB 1
Volume Total	203	134	0
Volume Left	1	0	0
Volume Right	0	0	0
cSH	1295	1700	1700
Volume to Capacity	0.00	0.08	0.00
Queue Length 95th (ft)	0	0	0
Control Delay (s)	0.1	0.0	0.0
Lane LOS	A		A
Approach Delay (s)	0.1	0.0	0.0
Approach LOS			A

Intersection Summary			
Average Delay	0.0		
Intersection Capacity Utilization	13.5%	ICU Level of Service	A
Analysis Period (min)	15		

Movement	EBL	EBT	EBR	WBL	WBT	WBR	NBL	NBT	NBR	SBL	SBT	SBR
Lane Configurations												
Volume (veh/h)	1	181	2	2	115	12	3	1	3	2	1	4
Sign Control		Free			Free			Stop			Stop	
Grade		0%			0%			0%			0%	
Peak Hour Factor	0.89	0.89	0.89	0.89	0.89	0.89	0.89	0.89	0.89	0.89	0.89	0.89
Hourly flow rate (vph)	1	203	2	2	129	13	3	1	3	2	1	4
Pedestrians												
Lane Width (ft)												
Walking Speed (ft/s)												
Percent Blockage												
Right turn flare (veh)												
Median type		None			None							
Median storage veh)												
Upstream signal (ft)												
pX, platoon unblocked												
vC, conflicting volume	143			206			352	354	204	351	348	136
vC1, stage 1 conf vol												
vC2, stage 2 conf vol												
vCu, unblocked vol	143			206			352	354	204	351	348	136
tC, single (s)	4.4			4.5			7.1	6.5	6.2	7.1	6.5	6.2
tC, 2 stage (s)												
tF (s)	2.5			2.6			3.5	4.0	3.3	3.5	4.0	3.3
p0 queue free %	100			100			99	100	100	100	100	100
cM capacity (veh/h)	1285			1173			597	570	836	599	574	913

Direction, Lane #	EB 1	WB 1	NB 1	SB 1
Volume Total	207	145	8	8
Volume Left	1	2	3	2
Volume Right	2	13	3	4
cSH	1285	1173	675	740
Volume to Capacity	0.00	0.00	0.01	0.01
Queue Length 95th (ft)	0	0	1	1
Control Delay (s)	0.1	0.1	10.4	9.9
Lane LOS	A	A	B	A
Approach Delay (s)	0.1	0.1	10.4	9.9
Approach LOS			B	A

Intersection Summary			
Average Delay	0.5		
Intersection Capacity Utilization	20.2%	ICU Level of Service	A
Analysis Period (min)	15		

Movement	EBL	EBT	WBT	WBR	SBL	SBR
Lane Configurations						
Volume (veh/h)	15	168	125	20	5	7
Sign Control		Free	Free		Stop	
Grade		0%	0%		0%	
Peak Hour Factor	0.98	0.98	0.98	0.98	0.98	0.98
Hourly flow rate (vph)	15	171	128	20	5	7
Pedestrians						
Lane Width (ft)						
Walking Speed (ft/s)						
Percent Blockage						
Right turn flare (veh)						
Median type		None	None			
Median storage veh)						
Upstream signal (ft)						
pX, platoon unblocked						
vC, conflicting volume	148				340	138
vC1, stage 1 conf vol						
vC2, stage 2 conf vol						
vCu, unblocked vol	148				340	138
tC, single (s)	4.4				6.4	6.2
tC, 2 stage (s)						
tF (s)	2.5				3.5	3.3
p0 queue free %	99				99	99
cM capacity (veh/h)	1279				648	911

Direction, Lane #	EB 1	WB 1	SB 1
Volume Total	187	148	12
Volume Left	15	0	5
Volume Right	0	20	7
cSH	1279	1700	779
Volume to Capacity	0.01	0.09	0.02
Queue Length 95th (ft)	1	0	1
Control Delay (s)	0.7	0.0	9.7
Lane LOS	A		A
Approach Delay (s)	0.7	0.0	9.7
Approach LOS			A

Intersection Summary			
Average Delay	0.7		
Intersection Capacity Utilization	30.8%	ICU Level of Service	A
Analysis Period (min)	15		

Movement	EBL	EBT	WBT	WBR	SBL	SBR
Lane Configurations						
Volume (veh/h)	4	164	143	3	2	2
Sign Control		Free	Free		Stop	
Grade		0%	0%		0%	
Peak Hour Factor	0.93	0.93	0.93	0.93	0.93	0.93
Hourly flow rate (vph)	4	176	154	3	2	2
Pedestrians						
Lane Width (ft)						
Walking Speed (ft/s)						
Percent Blockage						
Right turn flare (veh)						
Median type		None	None			
Median storage veh)						
Upstream signal (ft)						
pX, platoon unblocked						
vC, conflicting volume	157				340	155
vC1, stage 1 conf vol						
vC2, stage 2 conf vol						
vCu, unblocked vol	157				340	155
tC, single (s)	4.4				6.4	6.2
tC, 2 stage (s)						
tF (s)	2.5				3.5	3.3
p0 queue free %	100				100	100
cM capacity (veh/h)	1254				653	890

Direction, Lane #	EB 1	WB 1	SB 1
Volume Total	181	157	4
Volume Left	4	0	2
Volume Right	0	3	2
cSH	1254	1700	754
Volume to Capacity	0.00	0.09	0.01
Queue Length 95th (ft)	0	0	0
Control Delay (s)	0.2	0.0	9.8
Lane LOS	A		A
Approach Delay (s)	0.2	0.0	9.8
Approach LOS			A

Intersection Summary			
Average Delay	0.2		
Intersection Capacity Utilization	21.8%	ICU Level of Service	A
Analysis Period (min)	15		

Movement	EBL	EBT	EBR	WBL	WBT	WBR	NBL	NBT	NBR	SBL	SBT	SBR
Lane Configurations												
Volume (veh/h)	4	164	0	0	143	0	2	0	2	0	0	0
Sign Control		Free			Free			Stop			Stop	
Grade		0%			0%			0%			0%	
Peak Hour Factor	0.94	0.94	0.94	0.94	0.94	0.94	0.94	0.94	0.94	0.94	0.94	0.94
Hourly flow rate (vph)	4	174	0	0	152	0	2	0	2	0	0	0
Pedestrians												
Lane Width (ft)												
Walking Speed (ft/s)												
Percent Blockage												
Right turn flare (veh)												
Median type		None			None							
Median storage veh)												
Upstream signal (ft)												
pX, platoon unblocked												
vC, conflicting volume	152			174			335	335	174	337	335	152
vC1, stage 1 conf vol												
vC2, stage 2 conf vol												
vCu, unblocked vol	152			174			335	335	174	337	335	152
tC, single (s)	4.4			4.5			7.1	6.5	6.2	7.1	6.5	6.2
tC, 2 stage (s)												
tF (s)	2.5			2.6			3.5	4.0	3.3	3.5	4.0	3.3
p0 queue free %	100			100			100	100	100	100	100	100
cM capacity (veh/h)	1260			1198			617	583	869	613	583	894

Direction, Lane #	EB 1	WB 1	NB 1	SB 1
Volume Total	179	152	4	0
Volume Left	4	0	2	0
Volume Right	0	0	2	0
cSH	1260	1198	722	1700
Volume to Capacity	0.00	0.00	0.01	0.00
Queue Length 95th (ft)	0	0	0	0
Control Delay (s)	0.2	0.0	10.0	0.0
Lane LOS	A		B	A
Approach Delay (s)	0.2	0.0	10.0	0.0
Approach LOS			B	A

Intersection Summary			
Average Delay	0.2		
Intersection Capacity Utilization	21.8%	ICU Level of Service	A
Analysis Period (min)	15		

Movement	EBL	EBT	EBR	WBL	WBT	WBR	NBL	NBT	NBR	SBL	SBT	SBR
Lane Configurations												
Volume (veh/h)	1	178	0	0	129	3	1	0	1	4	0	0
Sign Control		Free			Free			Stop			Stop	
Grade		0%			0%			0%			0%	
Peak Hour Factor	0.78	0.78	0.78	0.78	0.78	0.78	0.78	0.78	0.78	0.78	0.78	0.78
Hourly flow rate (vph)	1	228	0	0	165	4	1	0	1	5	0	0
Pedestrians												
Lane Width (ft)												
Walking Speed (ft/s)												
Percent Blockage												
Right turn flare (veh)												
Median type		None			None							
Median storage veh)												
Upstream signal (ft)												
pX, platoon unblocked												
vC, conflicting volume	169			228			398	400	228	399	398	167
vC1, stage 1 conf vol												
vC2, stage 2 conf vol												
vCu, unblocked vol	169			228			398	400	228	399	398	167
tC, single (s)	4.4			4.5			7.1	6.5	6.2	7.1	6.5	6.2
tC, 2 stage (s)												
tF (s)	2.5			2.6			3.5	4.0	3.3	3.5	4.0	3.3
p0 queue free %	100			100			100	100	100	99	100	100
cM capacity (veh/h)	1250			1150			562	538	811	560	539	877

Direction, Lane #	EB 1	WB 1	NB 1	SB 1
Volume Total	229	169	3	5
Volume Left	1	0	1	5
Volume Right	0	4	1	0
cSH	1250	1150	664	560
Volume to Capacity	0.00	0.00	0.00	0.01
Queue Length 95th (ft)	0	0	0	1
Control Delay (s)	0.1	0.0	10.4	11.5
Lane LOS	A		B	B
Approach Delay (s)	0.1	0.0	10.4	11.5
Approach LOS			B	B

Intersection Summary			
Average Delay	0.2		
Intersection Capacity Utilization	20.2%	ICU Level of Service	A
Analysis Period (min)	15		

Movement	EBL	EBT	EBR	WBL	WBT	WBR	NBL	NBT	NBR	SBL	SBT	SBR
Lane Configurations												
Volume (veh/h)	7	171	2	2	101	3	2	0	1	22	9	19
Sign Control		Free			Free			Stop			Stop	
Grade		0%			0%			0%			0%	
Peak Hour Factor	0.89	0.89	0.89	0.89	0.89	0.89	0.89	0.89	0.89	0.89	0.89	0.89
Hourly flow rate (vph)	8	192	2	2	113	3	2	0	1	25	10	21
Pedestrians												
Lane Width (ft)												
Walking Speed (ft/s)												
Percent Blockage												
Right turn flare (veh)												
Median type		None			None							
Median storage veh)												
Upstream signal (ft)												
pX, platoon unblocked												
vC, conflicting volume	117			194			355	330	193	330	330	115
vC1, stage 1 conf vol												
vC2, stage 2 conf vol												
vCu, unblocked vol	117			194			355	330	193	330	330	115
tC, single (s)	4.4			4.5			7.1	6.5	6.2	7.1	6.5	6.2
tC, 2 stage (s)												
tF (s)	2.5			2.6			3.5	4.0	3.3	3.5	4.0	3.3
p0 queue free %	99			100			100	100	100	96	98	98
cM capacity (veh/h)	1310			1185			575	584	848	619	585	937

Direction, Lane #	EB 1	WB 1	NB 1	SB 1
Volume Total	202	119	3	56
Volume Left	8	2	2	25
Volume Right	2	3	1	21
cSH	1310	1185	644	702
Volume to Capacity	0.01	0.00	0.01	0.08
Queue Length 95th (ft)	0	0	0	7
Control Delay (s)	0.4	0.2	10.6	10.6
Lane LOS	A	A	B	B
Approach Delay (s)	0.4	0.2	10.6	10.6
Approach LOS			B	B

Intersection Summary			
Average Delay	1.9		
Intersection Capacity Utilization	22.8%	ICU Level of Service	A
Analysis Period (min)	15		

Movement	EBL	EBT	EBR	WBL	WBT	WBR	NBL	NBT	NBR	SBL	SBT	SBR
Lane Configurations												
Volume (veh/h)	0	185	0	1	131	1	1	0	0	2	0	0
Sign Control		Free			Free			Stop			Stop	
Grade		0%			0%			0%			0%	
Peak Hour Factor	0.95	0.95	0.95	0.95	0.95	0.95	0.95	0.95	0.95	0.95	0.95	0.95
Hourly flow rate (vph)	0	195	0	1	138	1	1	0	0	2	0	0
Pedestrians												
Lane Width (ft)												
Walking Speed (ft/s)												
Percent Blockage												
Right turn flare (veh)												
Median type		None			None							
Median storage veh)												
Upstream signal (ft)												
pX, platoon unblocked												
vC, conflicting volume	139			195			335	336	195	335	335	138
vC1, stage 1 conf vol												
vC2, stage 2 conf vol												
vCu, unblocked vol	139			195			335	336	195	335	335	138
tC, single (s)	4.4			4.5			7.1	6.5	6.2	7.1	6.5	6.2
tC, 2 stage (s)												
tF (s)	2.5			2.5			3.5	4.0	3.3	3.5	4.0	3.3
p0 queue free %	100			100			100	100	100	100	100	100
cM capacity (veh/h)	1294			1199			618	584	847	618	585	910

Direction, Lane #	EB 1	WB 1	NB 1	SB 1
Volume Total	195	140	1	2
Volume Left	0	1	1	2
Volume Right	0	1	0	0
cSH	1294	1199	618	618
Volume to Capacity	0.00	0.00	0.00	0.00
Queue Length 95th (ft)	0	0	0	0
Control Delay (s)	0.0	0.1	10.8	10.8
Lane LOS		A	B	B
Approach Delay (s)	0.0	0.1	10.8	10.8
Approach LOS			B	B

Intersection Summary			
Average Delay	0.1		
Intersection Capacity Utilization	19.7%	ICU Level of Service	A
Analysis Period (min)	15		

Movement	EBL	EBT	EBR	WBL	WBT	WBR	NBL	NBT	NBR	SBL	SBT	SBR
Lane Configurations												
Volume (veh/h)	6	179	6	7	101	19	6	20	9	21	23	1
Sign Control		Free			Free			Stop			Stop	
Grade		0%			0%			0%			0%	
Peak Hour Factor	0.86	0.86	0.86	0.86	0.86	0.86	0.86	0.86	0.86	0.86	0.86	0.86
Hourly flow rate (vph)	7	208	7	8	117	22	7	23	10	24	27	1
Pedestrians												
Lane Width (ft)												
Walking Speed (ft/s)												
Percent Blockage												
Right turn flare (veh)												
Median type		None			None							
Median storage veh)												
Upstream signal (ft)												
pX, platoon unblocked												
vC, conflicting volume	140			215			385	381	212	392	374	128
vC1, stage 1 conf vol												
vC2, stage 2 conf vol												
vCu, unblocked vol	140			215			385	381	212	392	374	128
tC, single (s)	4.4			4.5			7.1	6.5	6.2	7.1	6.5	6.2
tC, 2 stage (s)												
tF (s)	2.5			2.5			3.5	4.0	3.3	3.5	4.0	3.3
p0 queue free %	99			99			99	96	99	95	95	100
cM capacity (veh/h)	1294			1177			546	545	829	536	550	921

Direction, Lane #	EB 1	WB 1	NB 1	SB 1
Volume Total	222	148	41	52
Volume Left	7	8	7	24
Volume Right	7	22	10	1
cSH	1294	1177	598	548
Volume to Capacity	0.01	0.01	0.07	0.10
Queue Length 95th (ft)	0	1	5	8
Control Delay (s)	0.3	0.5	11.5	12.3
Lane LOS	A	A	B	B
Approach Delay (s)	0.3	0.5	11.5	12.3
Approach LOS			B	B

Intersection Summary			
Average Delay	2.7		
Intersection Capacity Utilization	23.8%	ICU Level of Service	A
Analysis Period (min)	15		

Movement	EBL	EBT	EBR	WBL	WBT	WBR	NBL	NBT	NBR	SBL	SBT	SBR
Lane Configurations												
Volume (veh/h)	1	211	1	2	133	6	0	0	1	2	0	1
Sign Control		Free			Free			Stop			Stop	
Grade		0%			0%			0%			0%	
Peak Hour Factor	0.84	0.84	0.84	0.84	0.84	0.84	0.84	0.84	0.84	0.84	0.84	0.84
Hourly flow rate (vph)	1	251	1	2	158	7	0	0	1	2	0	1
Pedestrians												
Lane Width (ft)												
Walking Speed (ft/s)												
Percent Blockage												
Right turn flare (veh)												
Median type		None			None							
Median storage veh)												
Upstream signal (ft)												
pX, platoon unblocked												
vC, conflicting volume	165			252			422	424	252	422	421	162
vC1, stage 1 conf vol												
vC2, stage 2 conf vol												
vCu, unblocked vol	165			252			422	424	252	422	421	162
tC, single (s)	4.4			4.5			7.1	6.5	6.2	7.1	6.5	6.2
tC, 2 stage (s)												
tF (s)	2.5			2.5			3.5	4.0	3.3	3.5	4.0	3.3
p0 queue free %	100			100			100	100	100	100	100	100
cM capacity (veh/h)	1264			1138			540	520	787	540	522	883

Direction, Lane #	EB 1	WB 1	NB 1	SB 1
Volume Total	254	168	1	4
Volume Left	1	2	0	2
Volume Right	1	7	1	1
cSH	1264	1138	787	620
Volume to Capacity	0.00	0.00	0.00	0.01
Queue Length 95th (ft)	0	0	0	0
Control Delay (s)	0.0	0.1	9.6	10.8
Lane LOS	A	A	A	B
Approach Delay (s)	0.0	0.1	9.6	10.8
Approach LOS			A	B

Intersection Summary			
Average Delay	0.2		
Intersection Capacity Utilization	21.7%	ICU Level of Service	A
Analysis Period (min)	15		

Movement	EBL	EBT	EBR	WBL	WBT	WBR	NBL	NBT	NBR	SBL	SBT	SBR
Lane Configurations												
Volume (veh/h)	0	206	3	5	144	7	2	3	2	1	2	0
Sign Control		Free			Free			Stop			Stop	
Grade		0%			0%			0%			0%	
Peak Hour Factor	0.99	0.99	0.99	0.99	0.99	0.99	0.99	0.99	0.99	0.99	0.99	0.99
Hourly flow rate (vph)	0	208	3	5	145	7	2	3	2	1	2	0
Pedestrians												
Lane Width (ft)												
Walking Speed (ft/s)												
Percent Blockage												
Right turn flare (veh)												
Median type		None			None							
Median storage veh)												
Upstream signal (ft)												
pX, platoon unblocked												
vC, conflicting volume	153			211			370	372	210	372	370	149
vC1, stage 1 conf vol												
vC2, stage 2 conf vol												
vCu, unblocked vol	153			211			370	372	210	372	370	149
tC, single (s)	4.4			4.5			7.1	6.5	6.2	7.1	6.5	6.2
tC, 2 stage (s)												
tF (s)	2.4			2.5			3.5	4.0	3.3	3.5	4.0	3.3
p0 queue free %	100			100			100	99	100	100	100	100
cM capacity (veh/h)	1294			1181			583	556	831	579	557	898

Direction, Lane #	EB 1	WB 1	NB 1	SB 1
Volume Total	211	158	7	3
Volume Left	0	5	2	1
Volume Right	3	7	2	0
cSH	1294	1181	623	564
Volume to Capacity	0.00	0.00	0.01	0.01
Queue Length 95th (ft)	0	0	1	0
Control Delay (s)	0.0	0.3	10.8	11.4
Lane LOS		A	B	B
Approach Delay (s)	0.0	0.3	10.8	11.4
Approach LOS			B	B

Intersection Summary			
Average Delay	0.4		
Intersection Capacity Utilization	22.1%	ICU Level of Service	A
Analysis Period (min)	15		

Movement	EBL	EBT	EBR	WBL	WBT	WBR	NBL	NBT	NBR	SBL	SBT	SBR
Lane Configurations												
Volume (veh/h)	2	225	2	0	165	14	3	9	1	6	5	0
Sign Control		Free			Free			Stop			Stop	
Grade		0%			0%			0%			0%	
Peak Hour Factor	0.94	0.94	0.94	0.94	0.94	0.94	0.94	0.94	0.94	0.94	0.94	0.94
Hourly flow rate (vph)	2	239	2	0	176	15	3	10	1	6	5	0
Pedestrians												
Lane Width (ft)												
Walking Speed (ft/s)												
Percent Blockage												
Right turn flare (veh)												
Median type		None			None							
Median storage veh)												
Upstream signal (ft)												
pX, platoon unblocked												
vC, conflicting volume	190			241			430	435	240	434	429	183
vC1, stage 1 conf vol												
vC2, stage 2 conf vol												
vCu, unblocked vol	190			241			430	435	240	434	429	183
tC, single (s)	4.4			4.5			7.1	6.5	6.2	7.1	6.5	6.2
tC, 2 stage (s)												
tF (s)	2.4			2.5			3.5	4.0	3.3	3.5	4.0	3.3
p0 queue free %	100			100			99	98	100	99	99	100
cM capacity (veh/h)	1252			1150			530	513	798	524	518	859

Direction, Lane #	EB 1	WB 1	NB 1	SB 1
Volume Total	244	190	14	12
Volume Left	2	0	3	6
Volume Right	2	15	1	0
cSH	1252	1150	532	521
Volume to Capacity	0.00	0.00	0.03	0.02
Queue Length 95th (ft)	0	0	2	2
Control Delay (s)	0.1	0.0	11.9	12.1
Lane LOS	A		B	B
Approach Delay (s)	0.1	0.0	11.9	12.1
Approach LOS			B	B

Intersection Summary			
Average Delay	0.7		
Intersection Capacity Utilization	23.6%	ICU Level of Service	A
Analysis Period (min)	15		

Movement	EBL	EBT	EBR	WBL	WBT	WBR	NBL	NBT	NBR	SBL	SBT	SBR
Lane Configurations												
Volume (veh/h)	3	196	25	4	159	6	14	40	2	4	33	2
Sign Control		Free			Free			Stop			Stop	
Grade		0%			0%			0%			0%	
Peak Hour Factor	0.94	0.94	0.94	0.94	0.94	0.94	0.94	0.94	0.94	0.94	0.94	0.94
Hourly flow rate (vph)	3	209	27	4	169	6	15	43	2	4	35	2
Pedestrians												
Lane Width (ft)												
Walking Speed (ft/s)												
Percent Blockage												
Right turn flare (veh)												
Median type		None			None							
Median storage veh)												
Upstream signal (ft)												
pX, platoon unblocked												
vC, conflicting volume	176			235			429	412	222	432	422	172
vC1, stage 1 conf vol												
vC2, stage 2 conf vol												
vCu, unblocked vol	176			235			429	412	222	432	422	172
tC, single (s)	4.4			4.5			7.1	6.5	6.2	7.1	6.5	6.2
tC, 2 stage (s)												
tF (s)	2.4			2.5			3.5	4.0	3.3	3.5	4.0	3.3
p0 queue free %	100			100			97	92	100	99	93	100
cM capacity (veh/h)	1268			1156			505	527	818	497	520	871

Direction, Lane #	EB 1	WB 1	NB 1	SB 1
Volume Total	238	180	60	41
Volume Left	3	4	15	4
Volume Right	27	6	2	2
cSH	1268	1156	528	528
Volume to Capacity	0.00	0.00	0.11	0.08
Queue Length 95th (ft)	0	0	9	6
Control Delay (s)	0.1	0.2	12.7	12.4
Lane LOS	A	A	B	B
Approach Delay (s)	0.1	0.2	12.7	12.4
Approach LOS			B	B

Intersection Summary			
Average Delay	2.6		
Intersection Capacity Utilization	25.7%	ICU Level of Service	A
Analysis Period (min)	15		

Movement	EBL	EBT	EBR	WBL	WBT	WBR	NBL	NBT	NBR	SBL	SBT	SBR
Lane Configurations												
Volume (veh/h)	0	200	4	4	161	1	5	0	2	1	1	0
Sign Control		Free			Free			Stop			Stop	
Grade		0%			0%			0%			0%	
Peak Hour Factor	0.94	0.94	0.94	0.94	0.94	0.94	0.94	0.94	0.94	0.94	0.94	0.94
Hourly flow rate (vph)	0	213	4	4	171	1	5	0	2	1	1	0
Pedestrians												
Lane Width (ft)												
Walking Speed (ft/s)												
Percent Blockage												
Right turn flare (veh)												
Median type		None			None							
Median storage veh)												
Upstream signal (ft)												
pX, platoon unblocked												
vC, conflicting volume	172			217			396	396	215	397	397	172
vC1, stage 1 conf vol												
vC2, stage 2 conf vol												
vCu, unblocked vol	172			217			396	396	215	397	397	172
tC, single (s)	4.4			4.5			7.1	6.5	6.2	7.1	6.5	6.2
tC, 2 stage (s)												
tF (s)	2.4			2.5			3.5	4.0	3.3	3.5	4.0	3.3
p0 queue free %	100			100			99	100	100	100	100	100
cM capacity (veh/h)	1272			1175			562	539	825	560	538	872

Direction, Lane #	EB 1	WB 1	NB 1	SB 1
Volume Total	217	177	7	2
Volume Left	0	4	5	1
Volume Right	4	1	2	0
cSH	1272	1175	618	549
Volume to Capacity	0.00	0.00	0.01	0.00
Queue Length 95th (ft)	0	0	1	0
Control Delay (s)	0.0	0.2	10.9	11.6
Lane LOS		A	B	B
Approach Delay (s)	0.0	0.2	10.9	11.6
Approach LOS			B	B

Intersection Summary			
Average Delay	0.4		
Intersection Capacity Utilization	21.8%	ICU Level of Service	A
Analysis Period (min)	15		

Movement	EBL	EBT	EBR	WBL	WBT	WBR	NBL	NBT	NBR	SBL	SBT	SBR
Lane Configurations												
Volume (veh/h)	0	82	121	10	145	0	0	0	0	20	0	21
Sign Control		Free			Free			Stop			Stop	
Grade		0%			0%			0%			0%	
Peak Hour Factor	0.86	0.86	0.86	0.86	0.86	0.86	0.86	0.86	0.86	0.86	0.86	0.86
Hourly flow rate (vph)	0	95	141	12	169	0	0	0	0	23	0	24
Pedestrians												
Lane Width (ft)												
Walking Speed (ft/s)												
Percent Blockage												
Right turn flare (veh)												
Median type		None			None							
Median storage veh)												
Upstream signal (ft)												
pX, platoon unblocked												
vC, conflicting volume	169			95			382	358	166	358	287	169
vC1, stage 1 conf vol												
vC2, stage 2 conf vol												
vCu, unblocked vol	169			95			382	358	166	358	287	169
tC, single (s)	4.5			4.5			7.1	6.5	6.2	7.5	6.5	6.6
tC, 2 stage (s)												
tF (s)	2.5			2.6			3.5	4.0	3.3	3.8	4.0	3.7
p0 queue free %	100			99			100	100	100	96	100	97
cM capacity (veh/h)	1218			1272			554	563	879	532	617	777

Direction, Lane #	EB 1	WB 1	WB 2	SB 1	SB 2
Volume Total	236	12	169	23	24
Volume Left	0	12	0	23	0
Volume Right	141	0	0	0	24
cSH	1700	1272	1700	532	777
Volume to Capacity	0.14	0.01	0.10	0.04	0.03
Queue Length 95th (ft)	0	1	0	3	2
Control Delay (s)	0.0	7.9	0.0	12.1	9.8
Lane LOS		A		B	A
Approach Delay (s)	0.0	0.5		10.9	
Approach LOS				B	

Intersection Summary			
Average Delay	1.3		
Intersection Capacity Utilization	21.7%	ICU Level of Service	A
Analysis Period (min)	15		

Movement	EBL	EBT	EBR	WBL	WBT	WBR	NBL	NBT	NBR	SBL	SBT	SBR
Lane Configurations												
Volume (veh/h)	0	86	16	0	46	27	109	0	6	0	0	0
Sign Control		Free			Free			Stop			Stop	
Grade		0%			0%			0%			0%	
Peak Hour Factor	0.91	0.91	0.91	0.91	0.91	0.91	0.91	0.91	0.91	0.91	0.91	0.91
Hourly flow rate (vph)	0	95	18	0	51	30	120	0	7	0	0	0
Pedestrians												
Lane Width (ft)												
Walking Speed (ft/s)												
Percent Blockage												
Right turn flare (veh)												
Median type		None			None							
Median storage veh)												
Upstream signal (ft)												
pX, platoon unblocked												
vC, conflicting volume	80			112			169	184	103	175	177	65
vC1, stage 1 conf vol												
vC2, stage 2 conf vol												
vCu, unblocked vol	80			112			169	184	103	175	177	65
tC, single (s)	4.5			4.5			7.5	6.5	6.2	7.1	6.5	6.2
tC, 2 stage (s)												
tF (s)	2.5			2.6			3.9	4.0	3.3	3.5	4.0	3.3
p0 queue free %	100			100			83	100	99	100	100	100
cM capacity (veh/h)	1318			1253			710	711	952	782	716	999

Direction, Lane #	EB 1	WB 1	NB 1	NB 2
Volume Total	112	80	120	7
Volume Left	0	0	120	0
Volume Right	18	30	0	7
cSH	1700	1700	710	952
Volume to Capacity	0.07	0.05	0.17	0.01
Queue Length 95th (ft)	0	0	15	1
Control Delay (s)	0.0	0.0	11.1	8.8
Lane LOS			B	A
Approach Delay (s)	0.0	0.0	11.0	
Approach LOS			B	

Intersection Summary			
Average Delay	4.4		
Intersection Capacity Utilization	18.2%	ICU Level of Service	A
Analysis Period (min)	15		

Appendix G
Intersection Control Evaluation (ICE) Report

metro.net/nw138

Northwest 138 Corridor Improvement Project

Intersection Control Evaluation Report

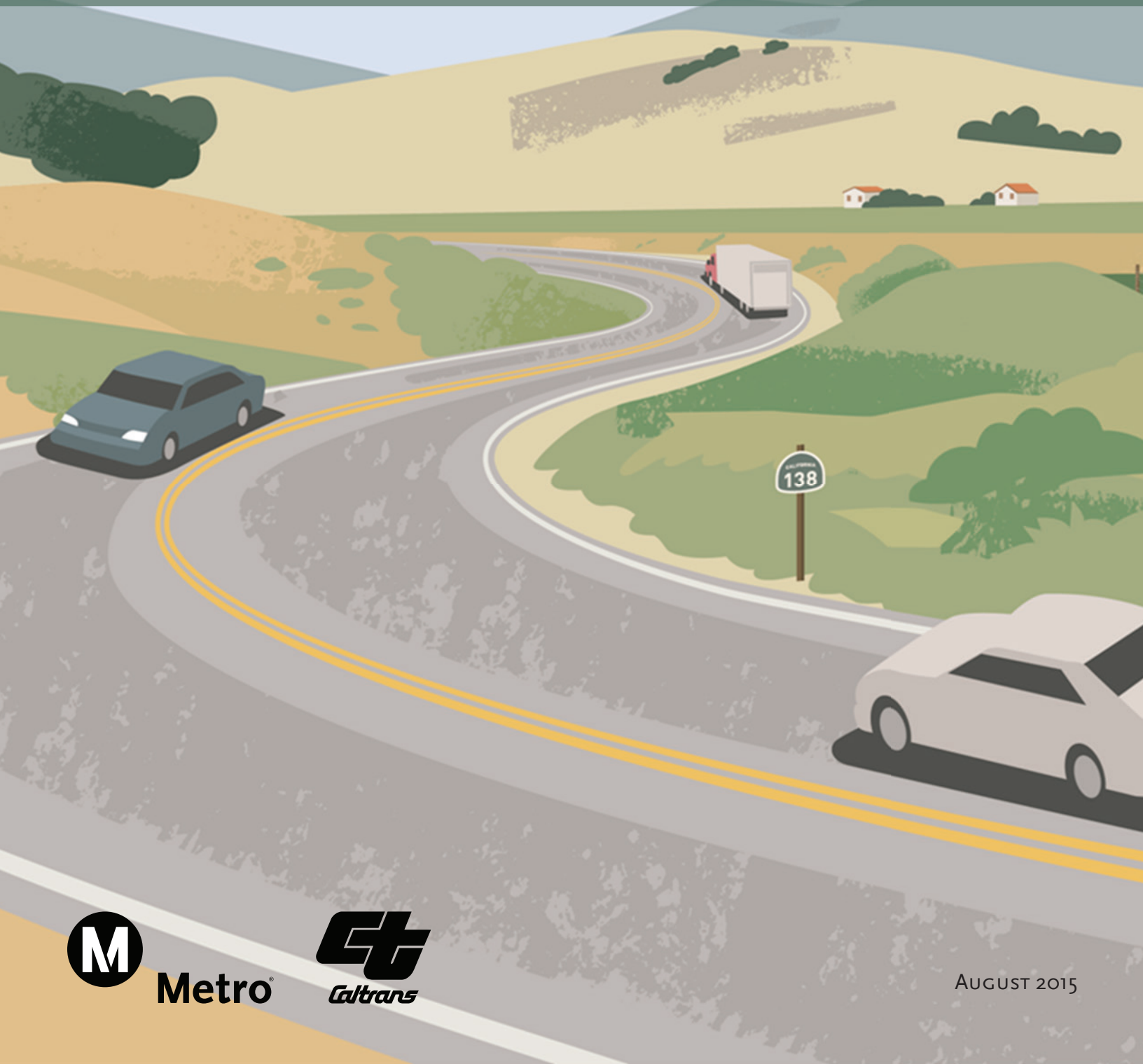

Metro

Caltrans

August 2015

NORTHWEST 138 CORRIDOR IMPROVEMENT PROJECT

INTERSECTION CONTROL EVALUATION REPORT

To:	Bob Blume, P.E.
From:	Sri Chakravarthy, P.E. T.E. and Sarah Brandenberg
	Kimley-Horn and Associates, Inc. & Fehr & Peers
Date:	August 5, 2015
Subject:	Intersection Control Evaluation Report for SR-138

Introduction

This Intersection Control Evaluation Report (report) was prepared for the Northwest 138 Corridor Improvement Project. The report contains an overview of the project, Caltrans Intersection Control Evaluation (ICE) process, the intersection treatments considered and evaluated and the conclusions.

The Transportation Analysis Report (TOAR) for the Northwest 138 Corridor Improvement Project was submitted in June 2015. This memo serves as a supplemental document and focuses on intersection treatment options along the project corridor.

PROJECT BACKGROUND

The proposed project would improve State Route 138 (SR-138) between the Interstate 5 (I-5) interchange and the State Route 14 (SR-14) interchange. The project corridor spans west to east approximately 36.8 miles (Post Mile [PM] 0.0 to PM 36.8) in the northwest (NW) portion of Los Angeles County, just south of the Kern County border. The existing SR-138 is a 2-lane rural highway that contributes to the local circulation network and provides an alternate route for east-west traffic in northwest Los Angeles County. The NW SR-138 Corridor Improvement Project (project) would upgrade SR-138 and provide operational and safety improvements.

STUDY AREA

The study area is shown in **Figure 1**. For the purposes of reflecting regional travel demands, the northern portion of Los Angeles County and southern portion of Kern County were included as part of the study vicinity. However, the corridor analysis and operational improvements are focused on SR-138 from I-5 to SR-14.

Kimley»Horn

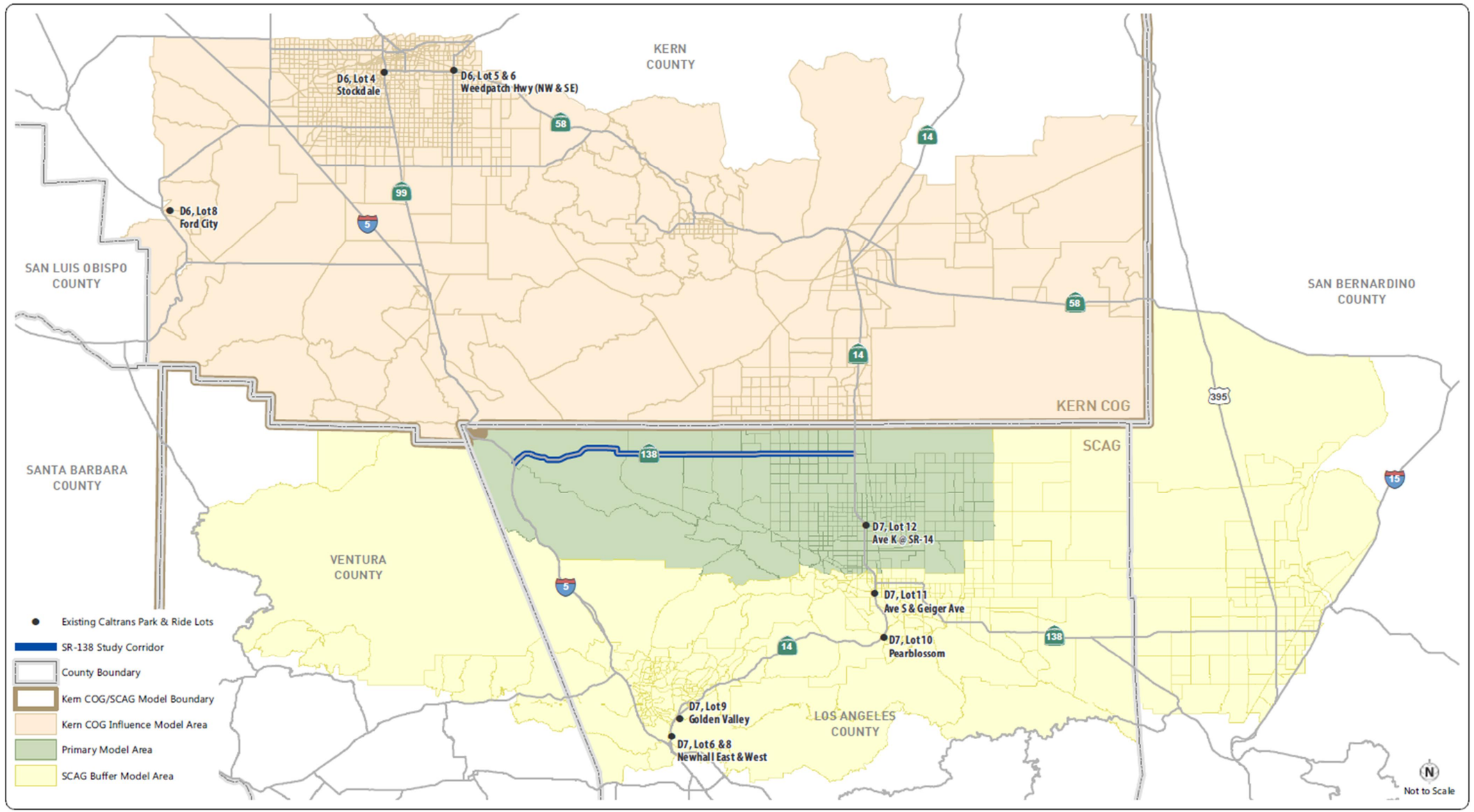
KERN COUNTY
D6, Lot 4
Stockdale
D6, Lot 5 & 6
Weedpatch Hwy (NW & SE)
D6, Lot 8
Ford City
SAN LUIS OBISPO COUNTY
SAN BERNARDINO COUNTY
KERN COG
SCAG
SANTA BARBARA COUNTY
VENTURA COUNTY
D7, Lot 12
Ave K @ SR-14
D7, Lot 11
Ave S & Geiger Ave
D7, Lot 10
Pearblossom
D7, Lot 9
Golden Valley
D7, Lot 6 & 8
Newhall East & West
LOS ANGELES COUNTY
Existing Caltrans Park & Ride Lots
SR-138 Study Corridor
County Boundary
Kern COG/SCAG Model Boundary
Kern COG Influence Model Area
Primary Model Area
SCAG Buffer Model Area
N
Not to Scale

PURPOSE AND NEED

The purpose and need of a project defines the objectives of the project and the transportation deficiencies. The project purpose aids decision-making by providing clear objectives and a basis for comparing alternatives.

The purpose of this project is to:

- Improve mobility and operations in northwest Los Angeles County;
- Enhance safety within the SR-138 Corridor;
- Accommodate foreseeable increases in travel and goods movement within northern Los Angeles County.

The need for the proposed project is derived from data that shows future travel demand will exceed the current capacity of SR-138, accident rates are higher than the state average, and it is an opportunity to bring roadway deficiencies up to current design standards.

Project Description & Alternatives

The project alternatives that have been developed to meet the purpose and need of the project are the No Build Alternative, Alternative 1 (Freeway/Expressway), Alternative 2 (Expressway/Limited Access Conventional Highway), and the Transportation System Management (TSM) Alternative.

No Build Alternative

Implementation of the No-Build Alternative would maintain the existing configuration of SR-138. It would not result in improvements to SR-138 and existing operational and safety design features of the corridor would remain as-is. The No-Build Alternative provides a baseline for comparing the impacts associated with the Build Alternatives.

Alternative 1 (Freeway and Expressway)

Alternative 1 (Freeway/Expressway) would include a 6-lane freeway from the I-5 interchange connector ramps to County Road 300th Street West, and a 4-lane expressway from County Road 300th Street West to the SR-14 interchange generally following the existing alignment of SR-138. There would also be improvements to the I-5/SR-138 and SR-138/SR-14 freeway connections. Study limits on I-5 are from PM 79.5 to PM 83.1 and on SR -14 the limits are from PM 73.4 to PM 74.4.

Antelope Acres Bypass. There is a design option with this alternative to include a bypass route around the Antelope Acres community. This option was developed to reduce the impacts to the community of Antelope Acres due to the proposed four-lane expressway along the existing alignment of SR-138. The alignment would bypass the community to the north along West Avenue C and going from west to east, the alignment would begin to deviate from the existing SR-138 near 100th Street West and continue in a northeasterly direction towards West Avenue C. After paralleling West Avenue C for approximately 1.0 mile, the alignment would continue in a southeasterly direction back towards the existing SR-138, and eventually join the existing SR-138 near 70th Street West. The existing highway would be

relinquished to the County as a local roadway between 100th Street West and 70th Street West, with additional speed reduction measures proposed to reduce cut-through traffic.

Alternative 2 (Expressway and Four-Lane Conventional Highway)

Alternative 2 (Expressway/Highway) would include a 6-lane freeway from the I-5 interchange connector ramps to Gorman Post Road, a 6-lane expressway from the Gorman Post Road interchange to County Road 300th Street West, a 4-lane expressway from 300th Street West to County Road 240th Street West, and a limited access Conventional Highway from County Road 240th Street West to the SR-14 interchange, generally following the existing alignment of SR-138. There would also be improvements to the I-5/SR-138 and SR-138/SR-14 freeway connections. The study limits on these connectors would be the same as Alternative 1; on I-5 from PM 79.5 to PM 83.1 and on SR -14 the limits are from PM 73.4 to PM 74.4.

Transportation System Management (TSM) Alternative

The TSM alternative would include improvements to SR-138 without major changes to the overall capacity of the corridor. This alternative would improve the vertical and horizontal roadway alignment in areas that are currently non-standard, widen shoulders, provide localized improvements at accident hot spots, improve intersections, add additional lanes to improve safety and traffic flow at focused areas, and provide guardrails at some existing utility pole locations. In addition, upgrades to signage and lighting are included to improve safety and operations.

The common design considerations for Alternatives 1 and 2 include:

- The improvement of three non-standard curve locations on existing alignment to 80 miles per hour (mph) design speed;
- Utility pole relocations would be required throughout the corridor and new easements for maintenance access;
- Existing Southern California Edison (SCE) and Los Angeles Department of Water and Power (LADWP) high voltage transmission lines cross the SR-138 corridor at four locations: Gorman Post Road, 140th Street, 120th Street and 105th Street. On the I-5 corridor, two existing SCE high voltage transmission lines cross I-5 just north of Gorman Creek Bridge. The project proposes to protect these facilities in place;
- On northbound I-5 approaching the SR-138 interchange, it is proposed to add a 1,300-foot deceleration lane prior to the proposed two-lane exit to SR-138. Approximately 1 mile to the north where SR-138 merges with I-5 north, a 2,500-foot acceleration lane is proposed. On southbound I-5 approaching the interchange, it is proposed to add a 1,300-foot deceleration lane prior to the proposed two-lane exit to SR-138. Approximately 1 mile to the south where SR-138 merges with I-5 south, a 3,500-foot acceleration lane is proposed;
- Improvements to the SR-138/SR-14 interchange to improve connections to the existing ramps;

- Use of the existing roadway as a local frontage road to provide local circulation or to maintain current parcel access. The existing highway would be relinquished to the County as a local roadway in these areas;
- Modification and/or replacement of the existing drainage system along the corridor as needed to be compatible with the proposed facility. Cross culverts with sufficient capacity would be installed at various locations to allow for passage of the 100-year storm event without overtopping the roadway;
- Proposed interchange and overcrossing at Gorman Post Road on SR-138. Alternative 1 also proposes new interchanges and undercrossings at Cement Plant Road and 300th Street West;
- The existing SR-138/SR-14 Separation Structure (Bridge #53-1835) would be replaced with a new wider structure to provide standard vertical clearance over SR-14;
- Five new grade separation structures (standard Box Culverts) are proposed to accommodate bicyclists, recreational use, and maintenance access across SR-138 at the following locations: Quail Lake near the private airport, 269th Street West (existing Pacific Crest Trail crossing), east of Three Points Road, and the east branch of the California Aqueduct crossing near 245th Street West; and
- Existing bicycle and pedestrian facilities would be maintained and/or enhanced. The existing bicycle routes south of SR-138 and east of 245th Street West would continue to be utilized. These routes follow parallel County roads. Between 300th Street West and 245th Street West, bicycle access would be provided by the existing SR-138 roadway which would be replaced by the new alignment to the south. Further west, the new access road proposed along the overhead utility corridor between Cement Plant Road and 300th Street West would accommodate bicyclists.

Other considerations for Alternatives 1 and 2 include:

- Alignment options that reduce impacts around Quail Lake. This includes the elimination of the separated median and use of a barrier to reduce the impacts on a residence, hillside adjacent to Quail Lake, and Quail Lake;
- Traffic Management Plan (TMP) development during final design;
- Consideration of truck inspection facilities within the corridor;
- Maintenance pullout locations would be coordinated with the Caltrans Maintenance staff.
- Construction staging would require one lane of traffic in each direction open to the public at all times. The anticipated construction staging would allow construction of new lanes adjacent to the existing lanes (either north or south of the existing roadway), and allow traffic to continue to use the existing lanes.
- Multiple access and treatment options at at-grade intersections would be considered to enhance operational efficiencies.

ICE Process

In August 2013, Caltrans issued the Intersection Control Evaluation (ICE) and design guidance to establish a performance-based evaluation process to identify viable and practical access alternatives. The SR-138 corridor improvement study has followed this guidance and has developed multiple access treatment options as part of the project's build alternatives.

ICE is a two stage process. The first stage is a screening assessment that identifies potentially feasible alternatives. The second stage is the more detailed operational and design analysis.

The ICE process is not complete until the treatment options for each access intersection are agreed upon by the Project Development Team, project owner/operators and project sponsor. At this time, all treatment options and strategies are still "in play" for all affected intersections along the SR-138 corridor. Any engineering recommendations in draft PR are preliminary and not binding.

Additional or customized performance and economic analysis may need to be completed by the Caltrans District staff to support the decision for each specific intersection. The following should be considered when performing the additional performance analysis at a later date:

- Utilize the Caltrans Safety Performance analysis tool (spreadsheet)
- The tool estimates the number and severity of crashes during Design Period based on a handful of inputs:
    - current and forecasted volumes (entering)
    - control strategy / alternative (roundabout, two-way or all-way stop control, signal control, or others)
    - environmental factor (surrogate for speed and context)

Intersection Treatments Considered

Several access treatment configurations and control strategies were reviewed for the intersections along the SR-138 corridor as part of the build alternatives as discussed below:

Two-way Stop control provides for free flow along the mainline while the minor street traffic waits for a gap in traffic flow on the mainline. This control strategy is typically considered when the traffic volumes on minor street are significantly lower and sufficient gaps exist in mainline traffic. This type of control was considered at several locations including Gormon Post Road, 245th Street W., 240th Street W., 230th Street W., 190th Street W., 150th Street W., 140th Street W., 130th Street W., 110th Street W., Loop Road West, Loop Road East, 40th Street W. and 30th Street W. for Alternative 1. Under Alternative 2, the two-way stop control was considered for 245th Street W., 240th Street W., 230th Street W., 190th Street W., 150th Street W., 140th Street W., 130th Street W., 110th Street W., 80th Street W., 70th Street W., 40th Street W. and 30th Street W. These streets have significantly lower traffic volumes as compared to SR-138 mainline. The eastbound and westbound left-turning traffic volumes at these locations are also low; and therefore median left-turns and/or displaced left-turn control types were not considered as the appropriate treatment option at these locations.

Roundabouts are circular intersections and provide field control of all entering traffic, channelized approaches, and appropriate geometric curvature to ensure that travel speeds on the circulatory roadway are typically less than 30 mph. They provide the least amount of conflict points and have been found to minimize the severity and frequency of most crash types. This type of control was considered at freeway on/off ramps at Private Road, 300th Street W., 90th Street W., 60th Street W., and SR-14 Ramps for Alternative 1. A roundabout treatment was considered for these locations due to high level of side street delay, poor level of service and high frequency/severity of collisions.

Jug-handles are one-way roadways in two quadrants of the intersection that allow for removal of left-turning traffic from the through stream without providing left-turn lanes. All turns—right, left, and U-turns—are made from the right side of the roadway. Drivers wishing to turn left exit the highway at a ramp on the right and turn left onto the minor road at a terminus separated from the main intersection. This control type has a potential for reducing left-turn collisions. A few select locations along the corridor were considered for this treatment but were not selected due to right-of-way constraints and bigger footprint and additional right-of-way required.

Median U-turns are a control type in which drivers wishing to turn left at an intersection are moved further to median crossovers. For median U-turn crossovers located on highways, drivers turn left off the highway by passing through the intersection, making a U-turn at the crossover, and turning right at the cross road through a channelized lane. Drivers intending to turn left onto the highway from the cross street turn right onto the highway and make a U-turn at the crossover. This type of control has a potential for reductions in left-turn collisions and merging/diverging collisions by reducing conflicting movements, and can minimize stops along the mainline. Median U-turns were considered at 5 locations including 3 Points Road, 210th Street W., 170th Street W., 90th Street W. and 60th Street W. under Alternative 1. These locations were selected due to the potential for high delays associated with left-turning vehicles and/or a high potential for right-angled collisions (left-turning vehicles from the mainline onto side-streets).

Displaced left-turn control removes the conflict between left-turning vehicles and oncoming traffic by introducing a left-turn bay placed to the left of oncoming traffic prior to the intersection. Vehicles access the left-turn bay at a midblock intersection on the approach where continuous flow is desired. This type of control removes left turns from the main intersection and was considered at Margalo Drive and 250th Street W. along the corridor. These locations were selected due to low U-Turn volumes and available right-of-way adjacent to the intersection for left-turn lane. This option also provides a smaller footprint than an interchange alternative and was determined to be a more economical option for treatment at subject intersections.

Tight Urban Diamond Interchange (TUDI) includes closely spaced ramp intersections, typically within 250 ft to 400 ft. of each other, with side-by-side left turn lanes on the minor highway that extend beyond the first ramp intersection. Coordinated signal phasing allows queuing of vehicles outside the ramp intersections and minimizes queuing of vehicles between the ramp intersections. Other traffic flow parameters like saturation flow rate, clearance times, and turning speeds in a TUDI are the same as a conventional at-grade intersection. Typically, a TUDI requires a four-phase signal phasing with

overlap phases for both intersections. This type of control was considered at a few select locations along the corridor but was not selected.

Traffic Signals are a common form of traffic control used to address roadway operations by alternately directing the conflicting traffic movements to stop and proceed. They allow the shared use of road space by separating conflicting movements in time and allocating delay. Traffic signals have a potential to reduce the severity and frequency of right angle and left turn collisions. This control type was considered at several locations along the corridor under Alternative 2 including Gormon Post Road, Private Road, 300th Street W., Margalo Drive, 3 Points Road, La Petite Avenue, 210th Street W., 170th Street W., 90th Street W., 60th Street W. and northbound and southbound freeway on-off ramps at SR-14. These locations were selected due to higher turning movement volumes, queuing and delay along crossing streets due to high mainline traffic volumes and collision history.

Intersection Treatments Evaluated

A variety of access treatment options are available along the SR-138 corridor. For the purpose of the Project Report, select treatment options were analyzed under each build alternative. Table 1 provides a comparison of the treatment options under No Build, Alternative 1 (Freeway and Expressway), Alternative 2 (Expressway and Four-Lane Conventional Highway), and the TSM Alternative. However, all treatment options for the build alternatives are still under consideration as described in further detail below.

Figure 2 displays the access locations along the corridor and analyzed traffic control devices under Alternative 1. For the purposes of analyzing traffic operations with the implementation of Alternative 1, traffic control treatments at the proposed access locations were assumed to be in place based on the projected traffic forecasts and allowable turning movements at each location. However, alternate intersection treatments were also explored and could ultimately be implemented based on the development patterns and resulting traffic demands that will evolve as development occurs in the area.

Figure 3 displays the access locations along the corridor and analyzed traffic control devices under Alternative 2.

Figure 4 displays the access locations along the corridor and analyzed traffic control devices under the TSM Alternative.

TABLE 1 – SUMMARY COMPARISON OF SR-138 ALTERNATIVES				
Design Feature	Alternative (No Build)	Alternative 1 (Freeway & Expressway)	Alternative 2 (Expressway & Four-Lane Conventional Highway)	TSM Alternative
Type of Facility	2-lane conventional highway	6-lane Freeway to 300th Street West ; 4-lane Expressway to SR-14	6-lane Expressway to 300th Street West; 4-lane Expressway to 240th Street West/4 lane limited access conventional highway to SR-14	2-lane conventional highway with improvements (curve corrections, paved shoulders, passing lanes, intersection channelization)
Access	Multiple access location, driveways, field roads, county roads	Interchanges along Freeway; Median U-Turns, Displaced Left-Turns, Two-Way Stop Controlled, Roundabouts	Tight Diamond Interchange; Traffic Signals; Two-Way Stop Control; Roundabouts	Two-Way Stop Control (Roundabouts & Traffic Signals may also be considered)
Median Widths	N/A	Varies 22 to 86 feet	Varies 0 to 86 feet	N/A – TBD

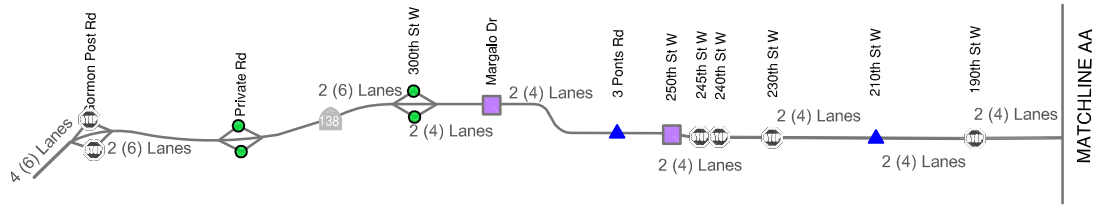

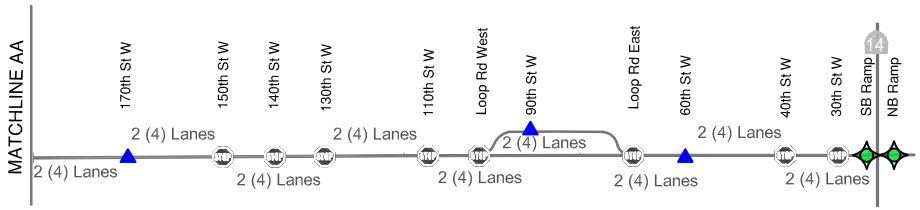

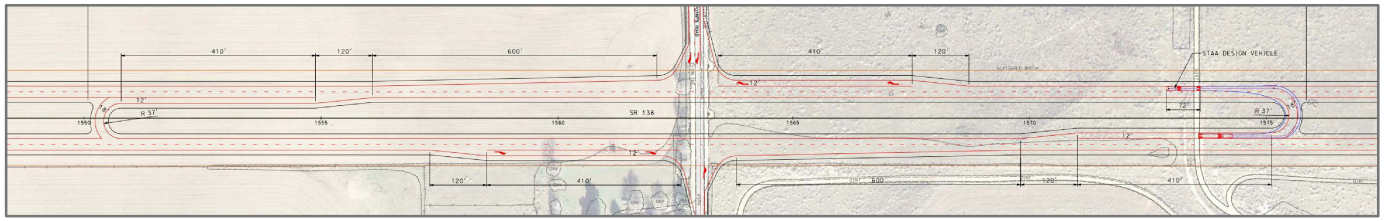

1 MEDIAN U-TURN - TYPICAL LAYOUT

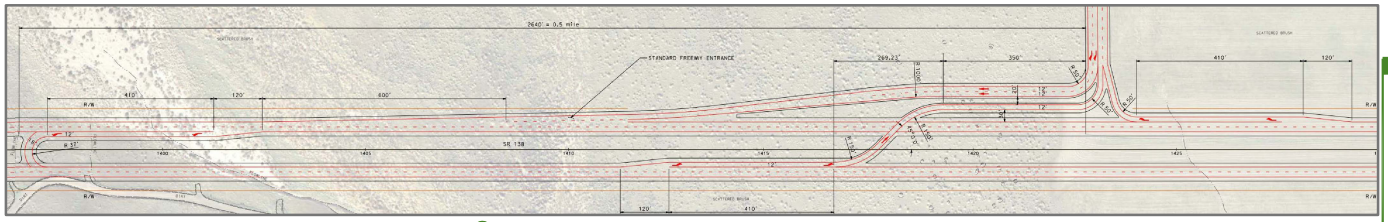

2 DISPLACED LEFT TURN - TYPICAL LAYOUT

LEGEND

- Grade Separated
- Median U-Turn
- Displaced Left Turn
- Traffic Signal
- Two-Way Stop
- Roundabout
- #(#) Existing Number of Lanes (Proposed Number of Lanes)

FIGURE 2

ANALYZED TREATMENTS - ALTERNATIVE 1

FEHR & PEERS

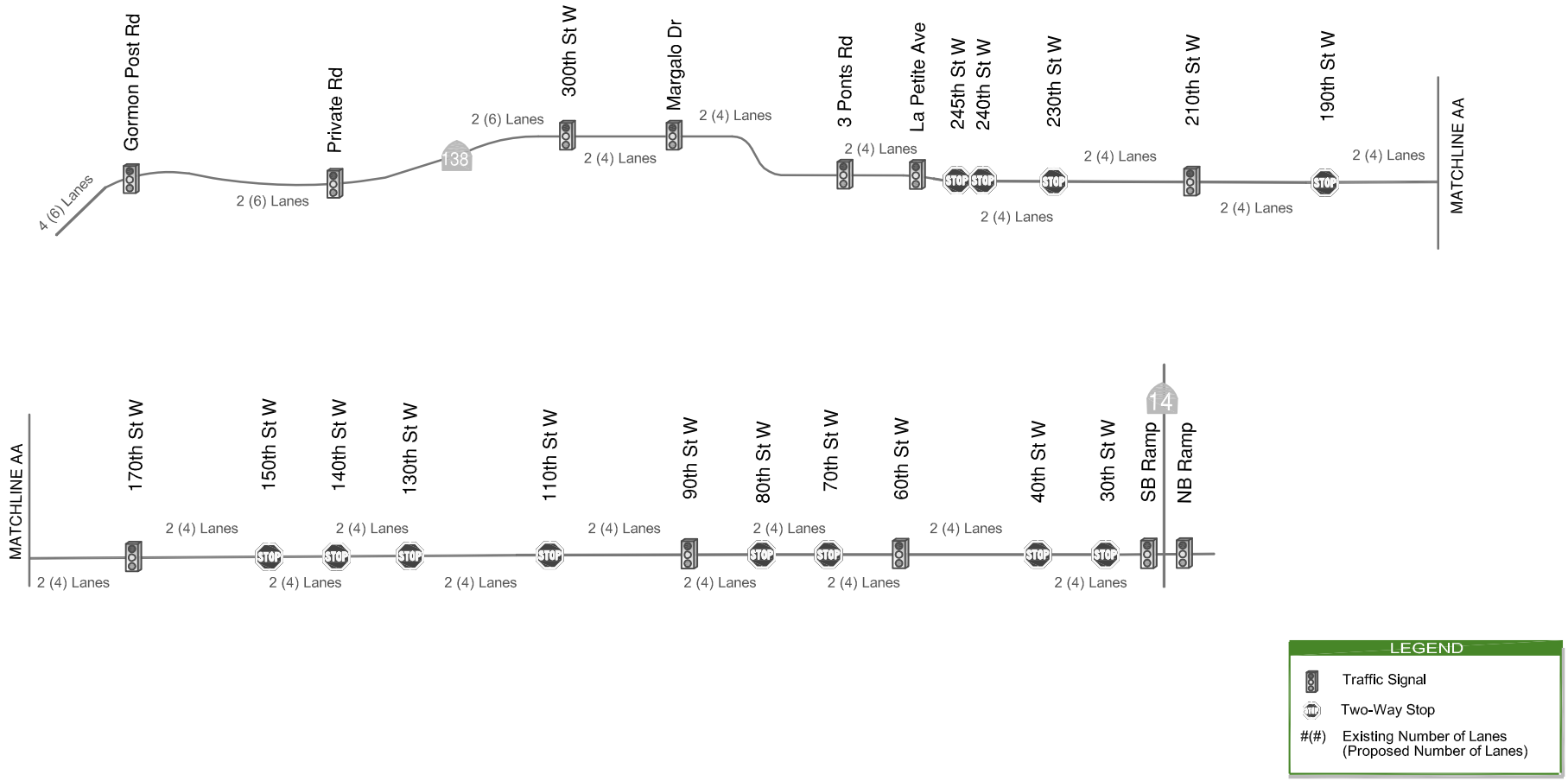

FIGURE 3

ANALYZED TREATMENTS - ALTERNATIVE 2

FEHR PEERS

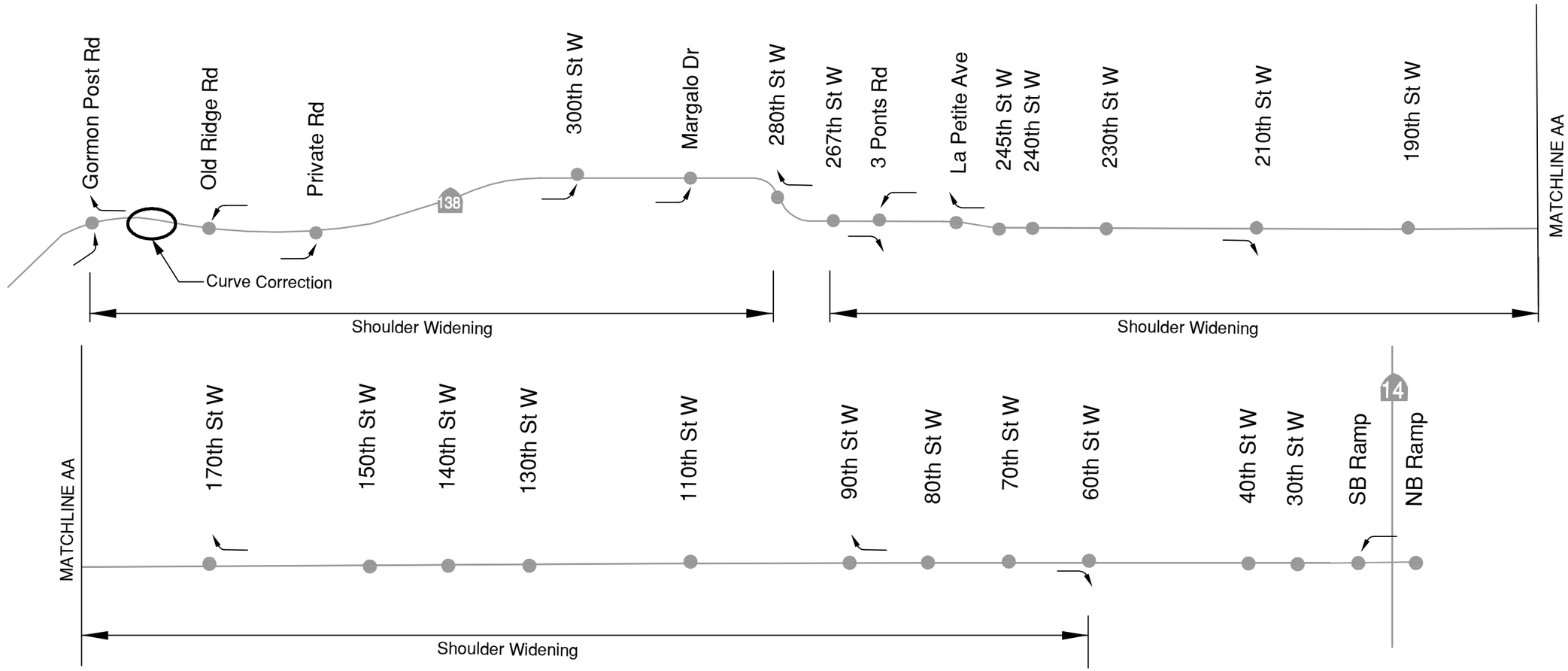

LEGEND

- Intersection
- Intersection Channelization *(Roundabouts and Traffic Signal May also be Considered)*

FIGURE 4
ANALYZED TREATMENTS - TSM ALTERNATIVE

Kimley»Horn

Evaluation Results

As identified in the previous section, several intersections along the corridor would have similar operational characteristics and were grouped together. Treatment options for these groups of intersections were identified and evaluated together. Intersections with unique operational characteristics such as SR-138/3 Points Road, SR-138/90th Street W., and SR-138/60th Street W. were evaluated separately. Table 2 summarizes the analyzed and potential treatment options for the year 2020 No Build/2025 Build Alternatives for all intersection locations along the corridor. Table 3 summarizes the analyzed and potential treatment options for the year 2040 No Build/2040 Build Alternatives for all intersection locations along the corridor.

Table 2. ICE for Opening Year (2020/2025) Conditions with Build Alternatives

Interchange/ Intersection	Existing/No Build/TSM Intersection Control (TWSC)	Alternative 1 & 2 Two-Way Stop (TWSC)	Alternative 1 & 2 Median U-Turn	Alternative 1 & 2 Displaced Left Turn	Alternative 1 & 2 Traffic Signal	Alternative 1 & 2 Roundabout	Alternative 1 & 2 Local Street Interchange
Group 1 - Interchanges Gorman Post Road Private Road 300th Street W. SR-14 Ramps	• Under 2020 conditions, these intersections would operate at LOS C or better with TWSC. • The average delay would range from approximately 10 seconds per vehicle (LOS B) to 20 seconds per vehicle (LOS C). • Vehicle queueing is expected to be minimal given the LOS results; however, some queueing could occur for side-street vehicles. • TWSC intersections can have more severe crashes due to uncontrolled approaches. • Cost is negligible given side-street stop control is present currently. • While LOS operations remain acceptable in the near-term, safety is not being improved. Control type under TSM Alternative to be determined at a later time.	• Under 2025 Alternative 1 & 2 conditions, these intersections would operate poorly (approximately LOS D or worse) if left as TWSC. • Delay would exceed 30 seconds per vehicle (given LOS delay thresholds). • Vehicle queueing would occur for side-street vehicles and vehicles making left-turns from SR-138 onto the side streets. • TWSC intersections can have more severe crashes due to uncontrolled approaches. • Cost is negligible given side-street stop control is present currently. • Vehicle delay worsens and safety is not being improved. TWSC not recommended under Alternative 1 &2.	• Under 2025 Alternative 1 & 2 conditions, these intersection would operate poorly (approximately LOS D or worse) with median U-turn. • Delay would exceed 30 seconds per vehicle (given LOS delay thresholds). • Vehicle queueing would occur for side-street vehicles and those making a U-turn. • Median U-turns reduce left-turn collisions compared to TWSC. • Cost is moderate and on-going maintenance is minimal. • Vehicle delay remains high but safety is improved for left-turning vehicles. Median U-turn not recommended under Alternative 1 &2.	• Under 2025 Alternative 1 & 2 conditions, these intersections would operate poorly (approximately LOS D or worse) with a displaced left-turn. • Delay would exceed 30 seconds per vehicle (given LOS delay thresholds). • Vehicle queueing would occur for side-street vehicles and those making a left-turn. • Displaced left-turns reduce left-turn collisions compared to TWSC. • Cost is moderate and on-going maintenance is minimal. • Vehicle delay remains high but safety is improved for left-turning vehicles. Displaced left-turns not recommended under Alternative 1 &2.	• Under 2025 Alternative 1 & 2 conditions, these intersections would operate at LOS C or better with a traffic signal. • Delay would range from approximately 10 to 20 seconds per vehicle. • Vehicle queues could be accommodated by providing extended turn pockets for left/right-turning vehicles. • Traffic signals reduce broadside collisions, and may increase rear-end collisions. • Cost is higher than other uncontrolled options and on-going maintenance costs are also higher. • Vehicle operations are acceptable and some safety improvements are implemented. Control type to be determined at a later time.	• Under 2025 Alternative 1 & 2 conditions, a dual-lane roundabout could accommodate the vehicle flows in the four-lane sections (i.e., at the SR-14 ramps) but not in the portion widened to 6 lanes. • Delay at SR-14 ramp intersections would be less than an average of 10 seconds per vehicle. • Vehicle queueing would be minimal given the low delay at the SR-14 ramps. • Roundabouts result in less severe crashes due to lower speeds, and eliminates some conflicts. • Cost is higher than other uncontrolled options but on-going maintenance costs are lower than signals. • At SR-14 ramp locations, vehicle operations are acceptable and some safety improvements are implemented. Control type to be determined at a later time.	• Under 2025 Alternative 1 & 2 conditions, these locations would operate at LOS B or better. • Delay would be less than an average of 15 seconds per vehicle. • Vehicle queueing would be minimal given the low delay. • Local street interchanges reduce collision rates by reducing the number of conflict points through grade-separation. • Cost is significantly higher than other options. • Vehicle operations are acceptable and safety improvements are implemented. Control type to be determined at a later time.

Table 2. ICE for Opening Year (2020/2025) Conditions with Build Alternatives (*continued)*

Interchange/ Intersection	Existing/No Build/TSM Intersection Control (TWSC)	Alternative 1 & 2 Two-Way Stop (TWSC)	Alternative 1 & 2 Median U-Turn	Alternative 1 & 2 Displaced Left Turn	Alternative 1 & 2 Traffic Signal	Alternative 1 & 2 Roundabout	Alternative 1 & 2 Local Street Interchange
Group 2 – Tee Intersections Margalo Drive 250Th St W.	• Under 2020 conditions, these intersections would operate at LOS C or better with TWSC. • The average delay would range from approximately 10 seconds per vehicle (LOS B) to 20 seconds per vehicle (LOS C). • Vehicle queueing is expected to be minimal given the LOS results; however, some queueing could occur for side-street vehicles. • TWSC intersections can have more severe crashes due to uncontrolled approaches. • Cost is negligible given side-street stop control is present currently. • While LOS operations remain acceptable in the near-term, safety is not being improved. Control type under TSM Alternative to be determined at a later time.	• Under 2025 Alternative 1 & 2 conditions, these intersections would operate poorly (approximately LOS D or worse) if left as TWSC. • Delay would exceed 30 seconds per vehicle (given LOS delay thresholds). • Vehicle queueing would occur for side-street vehicles and vehicles making left-turns from SR-138 onto the side streets. • TWSC intersections can have more severe crashes due to uncontrolled approaches. • Cost is negligible given side-street stop control is present currently. • Vehicle delay worsens and safety is not being improved. TWSC not recommended under Alternative 1 &2.	• Under 2025 Alternative 1 & 2 conditions, these intersections would operate acceptably with a median U-turn. • Delay would be minimal given the separation of the turning movements from the intersection. • Vehicle queueing would be minimal for side-street vehicles and those making a U-turn. • Median U-turns reduce left-turn collisions compared to TWSC. • Cost is moderate and on-going maintenance is minimal. • Vehicle delay is low and safety is improved for left-turning vehicles. Control type to be determined at a later time.	• Under 2025 Alternative 1 & 2 conditions, these intersections would operate acceptably with a displaced left-turn. • Delay would be minimal given the separation of the turning movements from the intersection. • Vehicle queueing would be minimal for side-street vehicles and those making a left-turn. • Displaced left-turns reduce left-turn collisions compared to TWSC. • Cost is moderate and on-going maintenance is minimal. • Vehicle delay is low and safety is improved for left-turning vehicles. Control type to be determined at a later time.	• Under 2025 Alternative 1 & 2 conditions, these intersections would operate at LOS B or better with a traffic signal. • Delay would range from approximately 10 to 15 seconds per vehicle. • Vehicle queues could be accommodated by providing extended turn pockets for left/right-turning vehicles. • Traffic signals reduce broadside collisions, and may increase rear-end collisions. • Cost is higher than other uncontrolled options and on-going maintenance costs are also higher. • Vehicle operations are acceptable and some safety improvements are implemented. Control type to be determined at a later time.	• Under 2025 Alternative 1 & 2 conditions, a dual-lane roundabout could be considered in this four-lane section. • Delay would be higher than the median U-turn and Displaced Left-turn options due to all vehicles needing to reduce speed through the roundabout. • Vehicle queueing would be minimal. • Roundabouts result in less severe crashes due to lower speeds, and eliminates some conflicts. • Cost is higher than other uncontrolled options but on-going maintenance costs are lower than signals. • Operations are acceptable and some safety improvements are implemented; however, design speeds would be reduced through the roundabout. Control type to be determined at a later time.	• Not Applicable as interchange is not under consideration at these locations.

Table 2. ICE for Opening Year (2020/2025) Conditions with Build Alternatives (*continued)*

Interchange/ Intersection	Existing/No Build/TSM Intersection Control (TWSC)	Alternative 1 & 2 Two-Way Stop (TWSC)	Alternative 1 & 2 Median U-Turn	Alternative 1 & 2 Displaced Left Turn	Alternative 1 & 2 Traffic Signal	Alternative 1 & 2 Roundabout	Alternative 1 & 2 Local Street Interchange
Group 3 – Four legged Intersections 210th Street W. 170th Street W.	• Under 2020 conditions, these intersections would operate at LOS C or better with TWSC. • The average delay would range from approximately 10 seconds per vehicle (LOS B) to 20 seconds per vehicle (LOS C). • Vehicle queueing is expected to be minimal given the LOS results; however, some queueing could occur for side-street vehicles. • TWSC intersections can have more severe crashes due to uncontrolled approaches. • Cost is negligible given side-street stop control is present currently. • While LOS operations remain acceptable in the near-term, safety is not being improved. Control type under TSM Alternative to be determined at a later time.	• Under 2025 Alternative 1 & 2 conditions, these intersections would operate poorly (approximately LOS D or worse) if left as TWSC. • Delay would exceed 30 seconds per vehicle (given LOS delay thresholds). • Vehicle queueing would occur for side-street vehicles and vehicles making left-turns from SR-138 onto the side streets. • TWSC intersections can have more severe crashes due to uncontrolled approaches. • Cost is negligible given side-street stop control is present currently. • Vehicle delay worsens and safety is not being improved. TWSC not recommended under Alternative 1 &2.	• Under 2025 Alternative 1 & 2 conditions, these intersections would operate acceptably with a median U-turn. • Delay would be minimal given the separation of the turning movements from the intersection. • Vehicle queueing would be minimal for side-street vehicles and those making a U-turn. • Median U-turns reduce left-turn collisions compared to TWSC. • Cost is moderate and on-going maintenance is minimal. • Vehicle delay is low and safety is improved for left-turning vehicles. Control type to be determined at a later time.	• Under 2025 Alternative 1 & 2 conditions, these intersections would operate acceptably with a displaced left-turn. • Delay would be minimal given the separation of the turning movements from the intersection. • Vehicle queueing would be minimal for side-street vehicles and those making a left-turn. • Displaced left-turns reduce left-turn collisions compared to TWSC. • Cost is moderate and on-going maintenance is minimal. • Vehicle delay is low and safety is improved for left-turning vehicles. Control type to be determined at a later time.	• Under 2025 Alternative 1 & 2 conditions, these intersections would operate at LOS A or better with a traffic signal. • Delay would be minimal given the LOS results. • Vehicle queues could be accommodated by providing turn pockets for left/right-turning vehicles. • Traffic signals reduce broadside collisions, and may increase rear-end collisions. • Cost is higher than other uncontrolled options and on-going maintenance costs are also higher. • Vehicle operations are acceptable and some safety improvements are implemented. Control type to be determined at a later time.	• Under 2025 Alternative 1 & 2 conditions, a dual-lane roundabout could be considered in this four-lane section. • Delay would be higher than the median U-turn and Displaced Left-turn options due to all vehicles needing to reduce speed through the roundabout. • Vehicle queueing would be minimal. • Roundabouts result in less severe crashes due to lower speeds, and eliminates some conflicts. • Cost is higher than other uncontrolled options but on-going maintenance costs are lower than signals. • Operations are acceptable and some safety improvements are implemented; however, design speeds would be reduced through the roundabout. Control type to be determined at a later time.	• Not Applicable as interchange is not under consideration at these locations.

Table 2. ICE for Opening Year (2020/2025) Conditions with Build Alternatives (*continued)*

Interchange/ Intersection	Existing/No Build/TSM Intersection Control (TWSC)	Alternative 1 & 2 Two-Way Stop (TWSC)	Alternative 1 & 2 Median U-Turn	Alternative 1 & 2 Displaced Left Turn	Alternative 1 & 2 Traffic Signal	Alternative 1 & 2 Roundabout	Alternative 1 & 2 Local Street Interchange
SR-138/ 3 points Road	• Under 2020 conditions, this intersection would operate at LOS D or better with TWSC. • The average delay would range from approximately 15 seconds per vehicle (LOS C) to 35 seconds per vehicle (LOS D). • Vehicle queueing would occur for side-street vehicles. • TWSC intersections can have more severe crashes due to uncontrolled approaches. • Cost is negligible given side-street stop control is present currently. • LOS operations worsen in the near-term, and safety is not being improved. Control type under TSM Alternative to be determined at a later time.	• Under 2025 Alternative 1 & 2 conditions, this intersection would operate poorly (approximately LOS D or worse) if left as TWSC. • Delay would exceed 30 seconds per vehicle (given LOS delay thresholds). • Vehicle queueing would occur for side-street vehicles and vehicles making left-turns from SR-138 onto the side streets. • TWSC intersections can have more severe crashes due to uncontrolled approaches. • Cost is negligible given side-street stop control is present currently. • Vehicle delay worsens and safety is not being improved. TWSC not recommended under Alternative 1 &2.	• Under 2025 Alternative 1 & 2 conditions, this intersection would operate acceptably with a median U-turn. • Delay would be minimal given the separation of the turning movements from the intersection. • Vehicle queueing would be minimal for side-street vehicles and those making a U-turn. • Median U-turns reduce left-turn collisions compared to TWSC. • Cost is moderate and on-going maintenance is minimal. • Vehicle delay is low and safety is improved for left-turning vehicles. Control type to be determined at a later time.	• Under 2025 Alternative 1 & 2 conditions, this intersection would operate acceptably with a displaced left-turn. • Delay would be minimal given the separation of the turning movements from the intersection. • Vehicle queueing would be minimal for side-street vehicles and those making a left-turn. • Displaced left-turns reduce left-turn collisions compared to TWSC. • Cost is moderate and on-going maintenance is minimal. • Vehicle delay is low and safety is improved for left-turning vehicles. Control type to be determined at a later time.	• Under 2025 Alternative 1 & 2 conditions, this intersection would operate at LOS C or better with a traffic signal. • Delay would be modest given the LOS results. • Vehicle queues could be accommodated by providing turn pockets for left/right-turning vehicles. • Traffic signals reduce broadside collisions, and may increase rear-end collisions. • Cost is higher than other uncontrolled options and on-going maintenance costs are also higher. • Vehicle operations are acceptable and some safety improvements are implemented. Control type to be determined at a later time.	• Under 2025 Alternative 1 & 2 conditions, a dual-lane roundabout could be considered in this four-lane section. • Delay would be higher than the median U-turn and Displaced Left-turn options due to all vehicles needing to reduce speed through the roundabout. • Vehicle queueing would be minimal. • Roundabouts result in less severe crashes due to lower speeds, and eliminates some conflicts. • Cost is higher than other uncontrolled options but on-going maintenance costs are lower than signals. • Operations are acceptable and some safety improvements are implemented; however, design speeds would be reduced through the roundabout. Control type to be determined at a later time.	• Not Applicable as interchange is not under consideration at this location.

Table 2. ICE for Opening Year (2020/2025) Conditions with Build Alternatives (*continued)*

Interchange/ Intersection	Existing/No Build/TSM Intersection Control (TWSC)	Alternative 1 & 2 Two-Way Stop (TWSC)	Alternative 1 & 2 Median U-Turn	Alternative 1 & 2 Displaced Left Turn	Alternative 1 & 2 Traffic Signal	Alternative 1 & 2 Roundabout	Alternative 1 & 2 Local Street Interchange
SR-138/ 90th Street W.	• Under 2020 conditions, this intersection would operate at LOS C with TWSC. • The average delay would range from approximately 15 to 20 seconds per vehicle. • Vehicle queueing would occur for side-street vehicles. • TWSC intersections can have more severe crashes due to uncontrolled approaches. • Cost is negligible given side-street stop control is present currently. • LOS operations somewhat worsen in the near-term but are still acceptable, and safety is not being improved. Control type under TSM Alternative to be determined at a later time.	• Under 2025 Alternative 1 & 2 conditions, this intersection would operate poorly (approximately LOS D or worse) if left as TWSC. • Delay would exceed 30 seconds per vehicle (given LOS delay thresholds). • Vehicle queueing would occur for side-street vehicles and vehicles making left-turns from SR-138 onto the side streets. • TWSC intersections can have more severe crashes due to uncontrolled approaches. • Cost is negligible given side-street stop control is present currently. • Vehicle delay worsens and safety is not being improved. TWSC not recommended under Alternative 1 &2.	• Under 2025 Alternative 1 & 2 conditions, this intersection would operate acceptably with a median U-turn. • Delay would be minimal given the separation of the turning movements from the intersection. • Vehicle queueing would be minimal for side-street vehicles and those making a U-turn. • Median U-turns reduce left-turn collisions compared to TWSC. • Cost is moderate and on-going maintenance is minimal. • Vehicle delay is low and safety is improved for left-turning vehicles. Control type to be determined at a later time.	• Under 2025 Alternative 1 & 2 conditions, this intersection would operate acceptably with a displaced left-turn. • Delay would be minimal given the separation of the turning movements from the intersection. • Vehicle queueing would be minimal for side-street vehicles and those making a left-turn. • Displaced left-turns reduce left-turn collisions compared to TWSC. • Cost is moderate and on-going maintenance is minimal. • Vehicle delay is low and safety is improved for left-turning vehicles. Control type to be determined at a later time.	• Under 2025 Alternative 1 & 2 conditions, this intersection would operate at LOS B with a traffic signal. • Delay would be modest given the LOS results. • Vehicle queues could be accommodated by providing turn pockets for left/right-turning vehicles. • Traffic signals reduce broadside collisions, and may increase rear-end collisions. • Cost is higher than other uncontrolled options and on-going maintenance costs are also higher. • Vehicle operations are acceptable and some safety improvements are implemented. Control type to be determined at a later time.	• Under 2025 Alternative 1 & 2 conditions, a dual-lane roundabout could be considered in this four-lane section. • Delay would be higher than the median U-turn and Displaced Left-turn options due to all vehicles needing to reduce speed through the roundabout. • Vehicle queueing would be minimal. • Roundabouts result in less severe crashes due to lower speeds, and eliminates some conflicts. • Cost is higher than other uncontrolled options but on-going maintenance costs are lower than signals. • Operations are acceptable and some safety improvements are implemented; however, design speeds would be reduced through the roundabout. Control type to be determined at a later time.	• Not Applicable as interchange is not under consideration at this location.

Table 2. ICE for Opening Year (2020/2025) Conditions with Build Alternatives (*continued)*

Interchange/ Intersection	Existing/No Build/TSM Intersection Control (TWSC)	Alternative 1 & 2 Two-Way Stop (TWSC)	Alternative 1 & 2 Median U-Turn	Alternative 1 & 2 Displaced Left Turn	Alternative 1 & 2 Traffic Signal	Alternative 1 & 2 Roundabout	Alternative 1 & 2 Local Street Interchange
SR-138/ 60th Street W.	• Under 2020 conditions, this intersection would operate at LOS C or better with TWSC. • The average delay would range from approximately 15 to 20 seconds per vehicle. • Vehicle queueing would occur for side-street vehicles. • TWSC intersections can have more severe crashes due to uncontrolled approaches. • Cost is negligible given side-street stop control is present currently. • LOS operations are acceptable in the near-term but safety is not being improved. Control type under TSM Alternative to be determined at a later time.	• Under 2025 Alternative 1 & 2 conditions, this intersection would operate poorly (approximately LOS D or worse) if left as TWSC. • Delay would exceed 30 seconds per vehicle (given LOS delay thresholds). • Vehicle queueing would occur for side-street vehicles and vehicles making left-turns from SR-138 onto the side streets. • TWSC intersections can have more severe crashes due to uncontrolled approaches. • Cost is negligible given side-street stop control is present currently. • Vehicle delay worsens and safety is not being improved. TWSC not recommended under Alternative 1 &2.	• Under 2025 Alternative 1 & 2 conditions, this intersection would operate acceptably with a median U-turn. • Delay would be minimal given the separation of the turning movements from the intersection. • Vehicle queueing would be minimal for side-street vehicles and those making a U-turn. • Median U-turns reduce left-turn collisions compared to TWSC. • Cost is moderate and on-going maintenance is minimal. • Vehicle delay is low and safety is improved for left-turning vehicles. Control type to be determined at a later time.	• Under 2025 Alternative 1 & 2 conditions, this intersection would operate acceptably with a displaced left-turn. • Delay would be minimal given the separation of the turning movements from the intersection. • Vehicle queueing would be minimal for side-street vehicles and those making a left-turn. • Displaced left-turns reduce left-turn collisions compared to TWSC. • Cost is moderate and on-going maintenance is minimal. • Vehicle delay is low and safety is improved for left-turning vehicles. Control type to be determined at a later time.	• Under 2025 Alternative 1 & 2 conditions, this intersection would operate at LOS B with a traffic signal. • Delay would be modest given the LOS results. • Vehicle queues could be accommodated by providing turn pockets for left/right-turning vehicles. • Traffic signals reduce broadside collisions, and may increase rear-end collisions. • Cost is higher than other uncontrolled options and on-going maintenance costs are also higher. • Vehicle operations are acceptable and some safety improvements are implemented. Control type to be determined at a later time.	• Under 2025 Alternative 1 & 2 conditions, a dual-lane roundabout could be considered in this four-lane section. • Delay would be higher than the median U-turn and Displaced Left-turn options due to all vehicles needing to reduce speed through the roundabout. • Vehicle queueing would be minimal. • Roundabouts result in less severe crashes due to lower speeds, and eliminates some conflicts. • Cost is higher than other uncontrolled options but on-going maintenance costs are lower than signals. • Operations are acceptable and some safety improvements are implemented; however, design speeds would be reduced through the roundabout. Control type to be determined at a later time.	• Not Applicable as interchange is not under consideration at this location.

Table 2. ICE for Opening Year (2020/2025) Conditions with Build Alternatives (*continued)*

Interchange/ Intersection	Existing/No Build/TSM Intersection Control (TWSC)	Alternative 1 & 2 Two-Way Stop (TWSC)	Alternative 1 & 2 Median U-Turn	Alternative 1 & 2 Displaced Left Turn	Alternative 1 & 2 Traffic Signal	Alternative 1 & 2 Roundabout	Alternative 1 & 2 Local Street Interchange
Group 4 – Intersections with low volume cross streets 245th Street W. 240th Street W. 230th Street W. 190th Street W. 150th Street W. 140th Street W. 130th Street W. 110th Street W. Loop Road W. 80th Street W./ Loop Road E. 70th Street W. 40th Street W. 30th Street W.	• Under 2020 conditions, these intersections would operate at LOS C or better with TWSC. • The average delay would range from approximately 10 seconds per vehicle (LOS B) to 20 seconds per vehicle (LOS C). • Vehicle queueing is expected to be minimal given the LOS results; however, some queueing could occur for side-street vehicles. • TWSC intersections can have more severe crashes due to uncontrolled approaches. • Cost is negligible given side-street stop control is present currently. • While LOS operations remain acceptable in the near-term, safety is not being improved. Given low volumes on side-streets, TWSC is adequate at these locations.	• Under 2025 Alternative 1 & 2 conditions, these intersections would operate acceptably (approximately LOS B) if left as TWSC. • Delay would range from 10 to 20 seconds per vehicle (given LOS delay thresholds). • Minimal vehicle queueing would occur for side-street vehicles and vehicles making left-turns from SR-138 onto the side streets. • TWSC intersections can have more severe crashes due to uncontrolled approaches. • Cost is negligible given side-street stop control is present currently. • While LOS operations remain acceptable in the near-term, safety is not being improved. Given low volumes on side-streets, TWSC is adequate at these locations. Control type to be determined at a later time.	• Under 2025 Alternative 1 & 2 conditions, these intersections would operate acceptably with a median U-turn. • Delay would be minimal given the separation of the turning movements from the intersection. • Vehicle queueing would be minimal for side-street vehicles and those making a U-turn. • Median U-turns reduce left-turn collisions compared to TWSC. • Cost is moderate and on-going maintenance is minimal. • Vehicle delay is low and safety is improved for left-turning vehicles. Given low volumes on side-streets, median U-turns are likely not needed at these locations. Control type to be determined at a later time.	• Under 2025 Alternative 1 & 2 conditions, these intersections would operate acceptably with a displaced left-turn. • Delay would be minimal given the separation of the turning movements from the intersection. • Vehicle queueing would be minimal for side-street vehicles and those making a left-turn. • Displaced left-turns reduce left-turn collisions compared to TWSC. • Cost is moderate and on-going maintenance is minimal. • Vehicle delay is low and safety is improved for left-turning vehicles. Given low volumes on side-streets, displaced left-turns are likely not needed at these locations. Control type to be determined at a later time.	• Under 2025 Alternative 1 & 2 conditions, these intersections would operate at LOS A or better with a traffic signal; however, side-street volumes would not warrant the installation of a signal. • Delay would be minimal given the LOS results. • Vehicle queues could be accommodated by providing turn pockets for left/right-turning vehicles. • Traffic signals reduce broadside collisions, and may increase rear-end collisions. • Cost is higher than other uncontrolled options and on-going maintenance costs are also higher. • Vehicle operations are acceptable and some safety improvements are implemented. Traffic forecasts do not warrant installation of a traffic signal. Control type to be determined at a later time.	• Under 2025 Alternative 1 & 2 conditions, a dual-lane roundabout could be considered in this four-lane section. • Delay would be minimal. • Vehicle queueing would be minimal. • Roundabouts result in less severe crashes due to lower speeds, and eliminates some conflicts. • Cost is higher than other uncontrolled options but on-going maintenance costs are lower than signals. • Operations are acceptable and some safety improvements are implemented; however, design speeds would be reduced through the roundabout. Given low volumes on side-streets, roundabouts are likely not needed at these locations. Control type to be determined at a later time.	• Not Applicable as interchange is not under consideration at these locations.

Table 3. ICE for Opening Year (2040) Conditions with Build Alternatives

Interchange/ Intersection	Existing/No Build/TSM Intersection Control (TWSC)	Alternative 1 & 2 Two-Way Stop (TWSC)	Alternative 1 & 2 Median U-Turn	Alternative 1 & 2 Displaced Left Turn	Alternative 1 & 2 Traffic Signal	Alternative 1 & 2 Roundabout	Alternative 1 & 2 Local Street Interchange
Group 1 - Interchanges Gorman Post Road Private Road 300th Street W. SR-14 Ramps	• Under 2040 No Build/TSM conditions, these intersections would operate at LOS F with TWSC, except SR-14 ramp intersections would operate at LOS C. • The average delay would exceed 200 seconds per vehicle except at SR-14 ramps. • Vehicle queueing would be extensive. • TWSC intersections can have more severe crashes due to uncontrolled approaches. • Cost is negligible given side-street stop control is present currently. • LOS operations are poor, and safety is not being improved. TWSC not recommended.	• Under 2040 Alternative 1 & 2 conditions, these intersections would operate at LOS F. • Average delay would be excessive. • Vehicle queueing would be extensive. • TWSC intersections can have more severe crashes due to uncontrolled approaches. • Cost is negligible given side-street stop control is present currently. • LOS operations are poor, and safety is not being improved. TWSC not recommended.	• Under 2040 Alternative 1 & 2 conditions, these intersections would operate at LOS F. • Average delay would be excessive. • Vehicle queueing would be extensive. • Median U-turns reduce left-turn collisions compared to TWSC. • Cost is moderate and on-going maintenance is minimal. • LOS operations are poor but safety is improved for left-turning vehicles. Median U-turn not recommended.	• Under 2040 Alternative 1 & 2 conditions, these intersections would operate at LOS F. • Average delay would be excessive. • Vehicle queueing would be extensive. • Displaced left-turns reduce left-turn collisions compared to TWSC. • Cost is moderate and on-going maintenance is minimal. • LOS operations are poor but safety is improved for left-turning vehicles. Displaced left-turns not recommended.	• Under 2040 Alternative 1 & 2 conditions, these intersections would operate at LOS C or better with a traffic signal. • Delay would range from approximately 15 to 35 seconds per vehicle. • Vehicle queues could be accommodated by providing extended turn pockets for left/right-turning vehicles. • Traffic signals reduce broadside collisions, and may increase rear-end collisions. • Cost is higher than other uncontrolled options and on-going maintenance costs are also higher. • Vehicle operations are acceptable and some safety improvements are implemented. Control type to be determined at a later time.	• Under 2040 Alternative 1 & 2 conditions, a dual-lane roundabout could accommodate the vehicle flows in the four-lane sections (i.e., at the SR-14 ramps) but not in the western portion widened to 6 lanes. • Delay at SR-14 ramp intersections would be an average of 10 to 20 seconds per vehicle. • Vehicle queueing would be minimal given the modest delay at the SR-14 ramps. • Roundabouts result in less severe crashes due to lower speeds, and eliminates some conflicts. • Cost is higher than other uncontrolled options but on-going maintenance costs are lower than signals. • At SR-14 ramp locations, vehicle operations are acceptable and some safety improvements are implemented. Control type to be determined at a later time for SR-14 ramps.	• Under 2040 Alternative 1 & 2 conditions, these locations would operate at LOS C or better. • Delay would be less than an average of 30 seconds per vehicle. • Vehicle queueing would be minimal given the low delay. • Local street interchanges reduce collision rates by reducing the number of conflict points through grade-separation. • Cost is significantly higher than other options. • Vehicle operations are acceptable and safety improvements are implemented. Control type to be determined at a later time.

Table 3. ICE for Opening Year (2040) Conditions with Build Alternatives (*continued)*

Interchange/ Intersection	Existing/No Build/TSM Intersection Control (TWSC)	Alternative 1 & 2 Two-Way Stop (TWSC)	Alternative 1 & 2 Median U-Turn	Alternative 1 & 2 Displaced Left Turn	Alternative 1 & 2 Traffic Signal	Alternative 1 & 2 Roundabout	Alternative 1 & 2 Local Street Interchange
Group 2 – Tee Intersections Margalo Drive 250Th St W.	• Under 2040 No Build/TSM conditions, these intersections would operate at LOS F with TWSC. • The average delay would exceed 50 seconds per vehicle. • Vehicle queueing would be extensive. • TWSC intersections can have more severe crashes due to uncontrolled approaches. • Cost is negligible given side-street stop control is present currently. • LOS operations are poor, and safety is not being improved. TWSC not recommended.	• Under 2040 Alternative 1 & 2 conditions, these intersections would operate at LOS F. • Average delay would be excessive. • Vehicle queueing would be extensive. • TWSC intersections can have more severe crashes due to uncontrolled approaches. • Cost is negligible given side-street stop control is present currently. • LOS operations are poor, and safety is not being improved. TWSC not recommended.	• Under 2040 Alternative 1 & 2 conditions, these intersections would operate acceptably with a median U-turn. • Delay would be minimal given the separation of the turning movements from the intersection. • Vehicle queueing would be minimal for side-street vehicles and those making a U-turn. • Median U-turns reduce left-turn collisions compared to TWSC. • Cost is moderate and on-going maintenance is minimal. • Vehicle delay is low and safety is improved for left-turning vehicles. Control type to be determined at a later time.	• Under 2040 Alternative 1 & 2 conditions, these intersections would operate acceptably with a displaced left-turn. • Delay would be minimal given the separation of the turning movements from the intersection. • Vehicle queueing would be minimal for side-street vehicles and those making a left-turn. • Displaced left-turns reduce left-turn collisions compared to TWSC. • Cost is moderate and on-going maintenance is minimal. • Vehicle delay is low and safety is improved for left-turning vehicles. Control type to be determined at a later time.	• Under 2040 Alternative 1 & 2 conditions, these intersections would operate at LOS D or better with a traffic signal. • Delay would range from approximately 20 to 45 seconds per vehicle. • Vehicle queues could be accommodated by providing extended turn pockets for left/right-turning vehicles. • Traffic signals reduce broadside collisions, and may increase rear-end collisions. • Cost is higher than other uncontrolled options and on-going maintenance costs are also higher. • Vehicle operations are acceptable and some safety improvements are implemented. Control type to be determined at a later time.	• Under 2040 Alternative 1 & 2 conditions, a dual-lane roundabout could be considered in this four-lane section. • Delay would be higher than the median U-turn and Displaced Left-turn options due to all vehicles needing to reduce speed through the roundabout. • Vehicle queueing would be minimal. • Roundabouts result in less severe crashes due to lower speeds, and eliminates some conflicts. • Cost is higher than other uncontrolled options but on-going maintenance costs are lower than signals. • Operations are acceptable and some safety improvements are implemented; however, design speeds would be reduced through the roundabout. Control type to be determined at a later time.	• Not Applicable as interchange is not under consideration at 250th Street W. • Cost is significantly higher than other options. • Local street interchange at Margalo Drive was not considered due to proximity to adjacent interchange to the west.

Table 3. ICE for Opening Year (2040) Conditions with Build Alternatives (*continued)*

Interchange/ Intersection	Existing/No Build/TSM Intersection Control (TWSC)	Alternative 1 & 2 Two-Way Stop (TWSC)	Alternative 1 & 2 Median U-Turn	Alternative 1 & 2 Displaced Left Turn	Alternative 1 & 2 Traffic Signal	Alternative 1 & 2 Roundabout	Alternative 1 & 2 Local Street Interchange
Group 3 – Four legged Intersections 210th Street W. 170th Street W.	• Under 2040 No Build/TSM conditions, these intersections would operate at LOS E/F with TWSC. • The average delay would exceed 50 seconds per vehicle. • Vehicle queueing would be extensive. • TWSC intersections can have more severe crashes due to uncontrolled approaches. • Cost is negligible given side-street stop control is present currently. • LOS operations are poor, and safety is not being improved. TWSC not recommended.	• Under 2040 Alternative 1 & 2 conditions, these intersections would operate at LOS F. • Average delay would be excessive. • Vehicle queueing would be extensive. • TWSC intersections can have more severe crashes due to uncontrolled approaches. • Cost is negligible given side-street stop control is present currently. • LOS operations are poor, and safety is not being improved. TWSC not recommended.	• Under 2040 Alternative 1 & 2 conditions, these intersections would operate acceptably with a median U-turn. • Delay would be minimal given the separation of the turning movements from the intersection. • Vehicle queueing would be minimal for side-street vehicles and those making a U-turn. • Median U-turns reduce left-turn collisions compared to TWSC. • Cost is moderate and on-going maintenance is minimal. • Vehicle delay is low and safety is improved for left-turning vehicles. Control type to be determined at a later time.	• Under 2040 Alternative 1 & 2 conditions, these intersections would operate acceptably with a displaced left-turn. • Delay would be minimal given the separation of the turning movements from the intersection. • Vehicle queueing would be minimal for side-street vehicles and those making a left-turn. • Displaced left-turns reduce left-turn collisions compared to TWSC. • Cost is moderate and on-going maintenance is minimal. • Vehicle delay is low and safety is improved for left-turning vehicles. Control type to be determined at a later time.	• Under 2040 Alternative 1 & 2 conditions, these intersections would operate at LOS D or better with a traffic signal. • Delay would range from approximately 20 to 45 seconds per vehicle. • Vehicle queues could be accommodated by providing extended turn pockets for left/right-turning vehicles. • Traffic signals reduce broadside collisions, and may increase rear-end collisions. • Cost is higher than other uncontrolled options and on-going maintenance costs are also higher. • Vehicle operations are acceptable and some safety improvements are implemented. Control type to be determined at a later time.	• Under 2040 Alternative 1 & 2 conditions, a dual-lane roundabout could be considered in this four-lane section. • Delay would be higher than the median U-turn and Displaced Left-turn options due to all vehicles needing to reduce speed through the roundabout. • Vehicle queueing would be minimal. • Roundabouts result in less severe crashes due to lower speeds, and eliminates some conflicts. • Cost is higher than other uncontrolled options but on-going maintenance costs are lower than signals. • Operations are acceptable and some safety improvements are implemented; however, design speeds would be reduced through the roundabout. Control type to be determined at a later time.	• Not Applicable as interchange is not under consideration at these locations.

Table 3. ICE for Opening Year (2040) Conditions with Build Alternatives (*continued)*

Interchange/ Intersection	Existing/No Build/TSM Intersection Control (TWSC)	Alternative 1 & 2 Two-Way Stop (TWSC)	Alternative 1 & 2 Median U-Turn	Alternative 1 & 2 Displaced Left Turn	Alternative 1 & 2 Traffic Signal	Alternative 1 & 2 Roundabout	Alternative 1 & 2 Local Street Interchange
SR-138/ 3 points Road	• Under 2040 No Build/TSM conditions, this intersection would operate at LOS F with TWSC. • The average delay would exceed 100 seconds per vehicle. • Vehicle queueing would be extensive. • TWSC intersections can have more severe crashes due to uncontrolled approaches. • Cost is negligible given side-street stop control is present currently. • LOS operations are poor, and safety is not being improved. TWSC not recommended.	• Under 2040 Alternative 1 & 2 conditions, this intersection would operate at LOS F. • Average delay would be excessive. • Vehicle queueing would be extensive. • TWSC intersections can have more severe crashes due to uncontrolled approaches. • Cost is negligible given side-street stop control is present currently. • LOS operations are poor, and safety is not being improved. TWSC not recommended.	• Under 2040 Alternative 1 & 2 conditions, this intersection would operate acceptably with a median U-turn. • Delay would be minimal given the separation of the turning movements from the intersection. • Vehicle queueing would be minimal for side-street vehicles and those making a U-turn. • Median U-turns reduce left-turn collisions compared to TWSC. • Cost is moderate and on-going maintenance is minimal. • Vehicle delay is low and safety is improved for left-turning vehicles. Control type to be determined at a later time.	• Under 2040 Alternative 1 & 2 conditions, this intersection would operate acceptably with a displaced left-turn. • Delay would be minimal given the separation of the turning movements from the intersection. • Vehicle queueing would be minimal for side-street vehicles and those making a left-turn. • Displaced left-turns reduce left-turn collisions compared to TWSC. • Cost is moderate and on-going maintenance is minimal. • Vehicle delay is low and safety is improved for left-turning vehicles. Control type to be determined at a later time.	• Under 2040 Alternative 1 & 2 conditions, this intersection would operate at LOS D or better with a traffic signal. • Delay would range from approximately 35 to 45 seconds per vehicle. • Vehicle queues could be accommodated by providing extended turn pockets for left/right-turning vehicles. • Traffic signals reduce broadside collisions, and may increase rear-end collisions. • Cost is higher than other uncontrolled options and on-going maintenance costs are also higher. • Vehicle operations are acceptable and some safety improvements are implemented. Control type to be determined at a later time.	• Under 2040 Alternative 1 & 2 conditions, a dual-lane roundabout could be considered in this four-lane section. • Delay would be higher than the median U-turn and Displaced Left-turn options due to all vehicles needing to reduce speed through the roundabout. • Vehicle queueing would be minimal. • Roundabouts result in less severe crashes due to lower speeds, and eliminates some conflicts. • Cost is higher than other uncontrolled options but on-going maintenance costs are lower than signals. • Operations are acceptable and some safety improvements are implemented; however, design speeds would be reduced through the roundabout. Control type to be determined at a later time.	• Cost is significantly higher than other options. • Interchange treatment is not required under an expressway alternative. • Control type to be determined at a later time.

Table 3. ICE for Opening Year (2040) Conditions with Build Alternatives (*continued)*

Interchange/ Intersection	Existing/No Build/TSM Intersection Control (TWSC)	Alternative 1 & 2 Two-Way Stop (TWSC)	Alternative 1 & 2 Median U-Turn	Alternative 1 & 2 Displaced Left Turn	Alternative 1 & 2 Traffic Signal	Alternative 1 & 2 Roundabout	Alternative 1 & 2 Local Street Interchange
SR-138/ 90th Street W.	• Under 2040 No Build/TSM conditions, this intersection would operate at LOS F with TWSC. • The average delay would exceed 150 seconds per vehicle. • Vehicle queueing would be extensive. • TWSC intersections can have more severe crashes due to uncontrolled approaches. • Cost is negligible given side-street stop control is present currently. • LOS operations are poor, and safety is not being improved. TWSC not recommended.	• Under 2040 Alternative 1 & 2 conditions, this intersection would operate at LOS F. • Average delay would be excessive. • Vehicle queueing would be extensive. • TWSC intersections can have more severe crashes due to uncontrolled approaches. • Cost is negligible given side-street stop control is present currently. • LOS operations are poor, and safety is not being improved. TWSC not recommended.	• Under 2040 Alternative 1 & 2 conditions, this intersection would operate acceptably with a median U-turn. • Delay would be minimal given the separation of the turning movements from the intersection. • Vehicle queueing would be minimal for side-street vehicles and those making a U-turn. • Median U-turns reduce left-turn collisions compared to TWSC. • Cost is moderate and on-going maintenance is minimal. • Vehicle delay is low and safety is improved for left-turning vehicles. Control type to be determined at a later time.	• Under 2040 Alternative 1 & 2 conditions, this intersection would operate acceptably with a displaced left-turn. • Delay would be minimal given the separation of the turning movements from the intersection. • Vehicle queueing would be minimal for side-street vehicles and those making a left-turn. • Displaced left-turns reduce left-turn collisions compared to TWSC. • Cost is moderate and on-going maintenance is minimal. • Vehicle delay is low and safety is improved for left-turning vehicles. Control type to be determined at a later time.	• Under 2040 Alternative 1 & 2 conditions, this intersection would operate at LOS C or better with a traffic signal. • Delay would range from approximately 20 to 25 seconds per vehicle. • Vehicle queues could be accommodated by providing extended turn pockets for left/right-turning vehicles. • Traffic signals reduce broadside collisions, and may increase rear-end collisions. • Cost is higher than other uncontrolled options and on-going maintenance costs are also higher. • Vehicle operations are acceptable and some safety improvements are implemented. Control type to be determined at a later time.	• Under 2040 Alternative 1 & 2 conditions, a dual-lane roundabout could be considered in this four-lane section. • Delay would be higher than the median U-turn and Displaced Left-turn options due to all vehicles needing to reduce speed through the roundabout. • Vehicle queueing would be minimal. • Roundabouts result in less severe crashes due to lower speeds, and eliminates some conflicts. • Cost is higher than other uncontrolled options but on-going maintenance costs are lower than signals. • Operations are acceptable and some safety improvements are implemented; however, design speeds would be reduced through the roundabout. Control type to be determined at a later time.	• Not Applicable as interchange is not under consideration at this location.

Table 3. ICE for Opening Year (2040) Conditions with Build Alternatives (*continued)*

Interchange/ Intersection	Existing/No Build/TSM Intersection Control (TWSC)	Alternative 1 & 2 Two-Way Stop (TWSC)	Alternative 1 & 2 Median U-Turn	Alternative 1 & 2 Displaced Left Turn	Alternative 1 & 2 Traffic Signal	Alternative 1 & 2 Roundabout	Alternative 1 & 2 Local Street Interchange
SR-138/ 60th Street W.	• Under 2040 No Build/TSM conditions, this intersection would operate at LOS F with TWSC. • The average delay would exceed 50 seconds per vehicle. • Vehicle queueing would be extensive. • TWSC intersections can have more severe crashes due to uncontrolled approaches. • Cost is negligible given side-street stop control is present currently. • LOS operations are poor, and safety is not being improved. TWSC not recommended.	• Under 2040 Alternative 1 & 2 conditions, this intersection would operate at LOS F. • Average delay would be excessive. • Vehicle queueing would be extensive. • TWSC intersections can have more severe crashes due to uncontrolled approaches. • Cost is negligible given side-street stop control is present currently. • LOS operations are poor, and safety is not being improved. TWSC not recommended.	• Under 2040 Alternative 1 & 2 conditions, this intersection would operate acceptably with a median U-turn. • Delay would be minimal given the separation of the turning movements from the intersection. • Vehicle queueing would be minimal for side-street vehicles and those making a U-turn. • Median U-turns reduce left-turn collisions compared to TWSC. • Cost is moderate and on-going maintenance is minimal. • Vehicle delay is low and safety is improved for left-turning vehicles. Control type to be determined at a later time.	• Under 2040 Alternative 1 & 2 conditions, this intersection would operate acceptably with a displaced left-turn. • Delay would be minimal given the separation of the turning movements from the intersection. • Vehicle queueing would be minimal for side-street vehicles and those making a left-turn. • Displaced left-turns reduce left-turn collisions compared to TWSC. • Cost is moderate and on-going maintenance is minimal. • Vehicle delay is low and safety is improved for left-turning vehicles. Control type to be determined at a later time.	• Under 2040 Alternative 1 & 2 conditions, this intersection would operate at LOS C or better with a traffic signal. • Delay would range from approximately 15 to 30 seconds per vehicle. • Vehicle queues could be accommodated by providing extended turn pockets for left/right-turning vehicles. • Traffic signals reduce broadside collisions, and may increase rear-end collisions. • Cost is higher than other uncontrolled options and on-going maintenance costs are also higher. • Vehicle operations are acceptable and some safety improvements are implemented. Control type to be determined at a later time.	• Under 2040 Alternative 1 & 2 conditions, a dual-lane roundabout could be considered in this four-lane section. • Delay would be higher than the median U-turn and Displaced Left-turn options due to all vehicles needing to reduce speed through the roundabout. • Vehicle queueing would be minimal. • Roundabouts result in less severe crashes due to lower speeds, and eliminates some conflicts. • Cost is higher than other uncontrolled options but on-going maintenance costs are lower than signals. • Operations are acceptable and some safety improvements are implemented; however, design speeds would be reduced through the roundabout. Control type to be determined at a later time.	• Not Applicable as interchange is not under consideration at this location.

Table 3. ICE for Opening Year (2040) Conditions with Build Alternatives (*continued)*

Interchange/ Intersection	Existing/No Build/TSM Intersection Control (TWSC)	Alternative 1 & 2 Two-Way Stop (TWSC)	Alternative 1 & 2 Median U-Turn	Alternative 1 & 2 Displaced Left Turn	Alternative 1 & 2 Traffic Signal	Alternative 1 & 2 Roundabout	Alternative 1 & 2 Local Street Interchange
Group 4 – Intersections with low volume cross streets 245th Street W. 240th Street W. 230th Street W. 190th Street W. 150th Street W. 140th Street W. 130th Street W. 110th Street W. Loop Road W. 80th Street W./ Loop Road E. 70th Street W. 40th Street W. 30th Street W.	• Under 2040 conditions, these intersections would operate at LOS D or worse with TWSC. • The average delay would exceed 35 seconds per vehicle. • Vehicle queueing would occur for side-street vehicles. • TWSC intersections can have more severe crashes due to uncontrolled approaches. • Cost is negligible given side-street stop control is present currently. • LOS operations would degrade and safety is not being improved. Control type under TSM Alternative to be determined at a later time.	• Under 2040 Alternative 1 & 2 conditions, these intersections would operate at LOS D or better (most would operate at LOS C) if left as TWSC. • Delay would range from 15 to 25 seconds per vehicle. • Modest vehicle queueing would occur for side-street vehicles and vehicles making left-turns from SR-138 onto the side streets. • TWSC intersections can have more severe crashes due to uncontrolled approaches. • Cost is negligible given side-street stop control is present currently. • While LOS operations remain acceptable in the near-term, safety is not being improved. Given low volumes on side-streets, TWSC is adequate at these locations. Control type to be determined at a later time.	• Under 2040 Alternative 1 & 2 conditions, these intersections would operate acceptably with a median U-turn. • Delay would be minimal given the separation of the turning movements from the intersection. • Vehicle queueing would be minimal for side-street vehicles and those making a U-turn. • Median U-turns reduce left-turn collisions compared to TWSC. • Cost is moderate and on-going maintenance is minimal. • Vehicle delay is low and safety is improved for left-turning vehicles. Given low volumes on side-streets, median U-turns are likely not needed at these locations. Control type to be determined at a later time.	• Under 2040 Alternative 1 & 2 conditions, these intersections would operate acceptably with a displaced left-turn. • Delay would be minimal given the separation of the turning movements from the intersection. • Vehicle queueing would be minimal for side-street vehicles and those making a left-turn. • Displaced left-turns reduce left-turn collisions compared to TWSC. • Cost is moderate and on-going maintenance is minimal. • Vehicle delay is low and safety is improved for left-turning vehicles. Given low volumes on side-streets, displaced left-turns are likely not needed at these locations. Control type to be determined at a later time.	• Under 2040 Alternative 1 & 2 conditions, these intersections would operate at LOS A or better with a traffic signal; however, side-street volumes would not warrant the installation of a signal based on forecasted volumes. • Delay would be minimal given the LOS results. • Vehicle queues could be accommodated by providing turn pockets for left/right-turning vehicles. • Traffic signals reduce broadside collisions, and may increase rear-end collisions. • Cost is higher than other uncontrolled options and on-going maintenance costs are also higher. • Vehicle operations are acceptable and some safety improvements are implemented. Traffic forecasts do not warrant installation of a traffic signal. Control type to be determined at a later time.	• Under 2040 Alternative 1 & 2 conditions, a dual-lane roundabout could be considered in this four-lane section. • Delay would be minimal. • Vehicle queueing would be minimal. • Roundabouts result in less severe crashes due to lower speeds, and eliminates some conflicts. • Cost is higher than other uncontrolled options but on-going maintenance costs are lower than signals. • Operations are acceptable and some safety improvements are implemented; however, design speeds would be reduced through the roundabout. Given low volumes on side-streets, roundabouts are likely not needed at these locations. Control type to be determined at a later time.	• Not Applicable as interchange is not under consideration at these locations.

Conclusions

As discussed above, the build alternatives for SR-138 provide multiple improvement options for consideration along the corridor. In addition to the analyzed access treatments under each build alternative, additional treatment options have been explored and can be selected for implementation at the appropriate time. Several treatments were analyzed as part of the Project Report, and additional analysis will occur at a later date to determine the preferred intersection treatments to be implemented.

Appendix H
SR-138 (HCS 2010) LOS Worksheets – 2020 and 2025 Conditions

Phone: Fax:
E-mail:

OPERATIONAL ANALYSIS

Analyst:	ACS
Agency/Co:	Fehr and Peers
Date:	8/21/2014
Analysis Period:	AM Peak Hour
Highway:	I
From/To:	I-5 Connector to 1-Gorman Post
Jurisdiction:	CALTRANS
Analysis Year:	2020 NB
Project ID:	STATE ROUTE 138 HCS ANALYSIS

FREE-FLOW SPEED

Direction	1		2	
Lane width	12.0	ft	12.0	ft
Lateral clearance:				
Right edge	6.0	ft	6.0	ft
Left edge	6.0	ft	6.0	ft
Total lateral clearance	12.0	ft	12.0	ft
Access points per mile	1		1	
Median type	Divided		Divided	
Free-flow speed:	Base		Base	
FFS or BFFS	60.0	mph	60.0	mph
Lane width adjustment, FLW	0.0	mph	0.0	mph
Lateral clearance adjustment, FLC	0.0	mph	0.0	mph
Median type adjustment, FM	0.0	mph	0.0	mph
Access points adjustment, FA	0.3	mph	0.3	mph
Free-flow speed	59.8	mph	59.8	mph

VOLUME

Direction	1		2	
Volume, V	410	vph	470	vph
Peak-hour factor, PHF	0.87		0.87	
Peak 15-minute volume, v15	118		135	
Trucks and buses	15	%	15	%
Recreational vehicles	0	%	0	%
Terrain type	Level		Level	
Grade	0.00	%	0.00	%
Segment length	0.00	mi	0.00	mi
Number of lanes	2		2	
Driver population adjustment, fP	1.00		1.00	
Trucks and buses PCE, ET	1.5		1.5	
Recreational vehicles PCE, ER	1.2		1.2	
Heavy vehicle adjustment, fHV	0.930		0.930	
Flow rate, vp	253	pcphpl	290	pcphpl

RESULTS

Direction	1		2	
Flow rate, vp	253	pcphpl	290	pcphpl
Free-flow speed, FFS	59.8	mph	59.8	mph
Avg. passenger-car travel speed, S	60.0	mph	60.0	mph
Level of service, LOS	A		A	
Density, D	4.2	pc/mi/ln	4.8	pc/mi/ln

Bicycle Level of Service

Posted speed limit, Sp		55
Percent of segment with occupied on-highway parking	0	0
Pavement rating, P	3	3
Flow rate in outside lane, vOL	235.6	270.1
Effective width of outside lane, We	24.00	24.00
Effective speed factor, St	4.79	4.79
Bicycle LOS Score, BLOS	7.00	7.06
Bicycle LOS	F	F

Overall results are not computed when free-flow speed is less than 45 mph.

Phone: Fax:
E-mail:

OPERATIONAL ANALYSIS

Analyst:	ACS
Agency/Co:	Fehr and Peers
Date:	8/21/2014
Analysis Period:	PM Peak Hour
Highway:	I
From/To:	I-5 Connector to 1-Gorman Post
Jurisdiction:	CALTRANS
Analysis Year:	2020 NB
Project ID:	STATE ROUTE 138 HCS ANALYSIS

FREE-FLOW SPEED

Direction	1		2	
Lane width	12.0	ft	12.0	ft
Lateral clearance:				
Right edge	6.0	ft	6.0	ft
Left edge	6.0	ft	6.0	ft
Total lateral clearance	12.0	ft	12.0	ft
Access points per mile	1		1	
Median type	Divided		Divided	
Free-flow speed:	Base		Base	
FFS or BFFS	60.0	mph	60.0	mph
Lane width adjustment, FLW	0.0	mph	0.0	mph
Lateral clearance adjustment, FLC	0.0	mph	0.0	mph
Median type adjustment, FM	0.0	mph	0.0	mph
Access points adjustment, FA	0.3	mph	0.3	mph
Free-flow speed	59.8	mph	59.8	mph

VOLUME

Direction	1		2	
Volume, V	540	vph	390	vph
Peak-hour factor, PHF	0.86		0.86	
Peak 15-minute volume, v15	157		113	
Trucks and buses	15	%	15	%
Recreational vehicles	0	%	0	%
Terrain type	Level		Level	
Grade	0.00	%	0.00	%
Segment length	0.00	mi	0.00	mi
Number of lanes	2		2	
Driver population adjustment, fP	1.00		1.00	
Trucks and buses PCE, ET	1.5		1.5	
Recreational vehicles PCE, ER	1.2		1.2	
Heavy vehicle adjustment, fHV	0.930		0.930	
Flow rate, vp	337	pcphpl	243	pcphpl

RESULTS

Direction	1		2	
Flow rate, vp	337	pcphpl	243	pcphpl
Free-flow speed, FFS	59.8	mph	59.8	mph
Avg. passenger-car travel speed, S	60.0	mph	60.0	mph
Level of service, LOS	A		A	
Density, D	5.6	pc/mi/ln	4.1	pc/mi/ln

Bicycle Level of Service

Posted speed limit, Sp		55
Percent of segment with occupied on-highway parking	0	0
Pavement rating, P	3	3
Flow rate in outside lane, vOL	314.0	226.7
Effective width of outside lane, We	24.00	24.00
Effective speed factor, St	4.79	4.79
Bicycle LOS Score, BLOS	7.14	6.98
Bicycle LOS	F	F

Overall results are not computed when free-flow speed is less than 45 mph.

Phone: Fax:
E-Mail:

Directional Two-Lane Highway Segment Analysis

Analyst	ACS
Agency/Co.	Fehr and Peers
Date Performed	8/21/2014
Analysis Time Period	AM Peak Hour
Highway	SR-138
From/To	Gorman Post to Private Rd
Jurisdiction	CALTRANS
Analysis Year	2020 NB
Description	STATE ROUTE 138 HCS ANALYSIS

Input Data

Highway class	Class 1		Peak hour factor, PHF	0.79	
Shoulder width	10.0	ft	% Trucks and buses	15	%
Lane width	12.0	ft	% Trucks crawling	0.0	%
Segment length	2.5	mi	Truck crawl speed	0.0	mi/hr
Terrain type	Level		% Recreational vehicles	20	%
Grade: Length	-	mi	% No-passing zones	20	%
Up/down	-	%	Access point density	1	/mi

Analysis direction volume, Vd 380 veh/h
Opposing direction volume, Vo 350 veh/h

Average Travel Speed

Direction	Analysis(d)		Opposing (o)	
PCE for trucks, ET	1.2		1.3	
PCE for RVs, ER	1.0		1.0	
Heavy-vehicle adj. factor,(note-5) fHV	0.971		0.957	
Grade adj. factor,(note-1) fg	1.00		1.00	
Directional flow rate,(note-2) vi	495	pc/h	463	pc/h

Free-Flow Speed from Field Measurement:		
Field measured speed,(note-3) S FM	-	mi/h
Observed total demand,(note-3) V	-	veh/h
Estimated Free-Flow Speed:		
Base free-flow speed,(note-3) BFFS	60.0	mi/h
Adj. for lane and shoulder width,(note-3) fLS	0.0	mi/h
Adj. for access point density,(note-3) fA	0.3	mi/h
Free-flow speed, FFSd	59.8	mi/h
Adjustment for no-passing zones, fnp	1.3	mi/h
Average travel speed, ATSd	51.0	mi/h
Percent Free Flow Speed, PFFS	85.4	%

Percent Time-Spent-Following

Direction	Analysis(d)		Opposing (o)	
PCE for trucks, ET	1.0		1.0	
PCE for RVs, ER	1.0		1.0	
Heavy-vehicle adjustment factor, fHV	1.000		1.000	
Grade adjustment factor,(note-1) fg	1.00		1.00	
Directional flow rate,(note-2) vi	481	pc/h	443	pc/h
Base percent time-spent-following,(note-4) BPTSFd	48.8	%		
Adjustment for no-passing zones, fnp	30.0			
Percent time-spent-following, PTSFd	64.4	%		

Level of Service and Other Performance Measures

Level of service, LOS	C	
Volume to capacity ratio, v/c	0.20	
Peak 15-min vehicle-miles of travel, VMT15	301	veh-mi
Peak-hour vehicle-miles of travel, VMT60	950	veh-mi
Peak 15-min total travel time, TT15	5.9	veh-h
Capacity from ATS, CdATS	1627	veh/h
Capacity from PTSF, CdPTSF	1700	veh/h
Directional Capacity	4775	veh/h

Passing Lane Analysis

Total length of analysis segment, Lt	2.5	mi
Length of two-lane highway upstream of the passing lane, Lu	-	mi
Length of passing lane including tapers, Lpl	-	mi
Average travel speed, ATSd (from above)	51.0	mi/h
Percent time-spent-following, PTSFd (from above)	64.4	
Level of service, LOSd (from above)	C	

Average Travel Speed with Passing Lane

Downstream length of two-lane highway within effective length of passing lane for average travel speed, Lde	-	mi
Length of two-lane highway downstream of effective length of the passing lane for average travel speed, Ld	-	mi
Adj. factor for the effect of passing lane on average speed, fpl	-	
Average travel speed including passing lane, ATSpl	-	

Percent Time-Spent-Following with Passing Lane

Downstream length of two-lane highway within effective length of passing lane for percent time-spent-following, Lde	-	mi
Length of two-lane highway downstream of effective length of the passing lane for percent time-spent-following, Ld	-	mi
Adj. factor for the effect of passing lane on percent time-spent-following, fpl	-	
Percent time-spent-following including passing lane, PTSFpl	-	%

Level of Service and Other Performance Measures with Passing Lane

Level of service including passing lane, LOSpl	-	
Peak 15-min total travel time, TT15	-	veh-h

Bicycle Level of Service

Posted speed limit, Sp	55
Percent of segment with occupied on-highway parking	0
Pavement rating, P	3
Flow rate in outside lane, vOL	481.0
Effective width of outside lane, We	32.00
Effective speed factor, St	4.79
Bicycle LOS Score, BLOS	5.12
Bicycle LOS	E

Notes:

1. Note that the adjustment factor for level terrain is 1.00, as level terrain is one of the base conditions. For the purpose of grade adjustment, specific dewngrade segments are treated as level terrain.
2. If vi (vd or vo) >= 1,700 pc/h, terminate analysis-the LOS is F.
3. For the analysis direction only and for v>200 veh/h.
4. For the analysis direction only.
5. Use alternative Exhibit 15-14 if some trucks operate at crawl speeds on a specific downgrade.

Phone: Fax:
E-Mail:

Directional Two-Lane Highway Segment Analysis

Analyst	ACS
Agency/Co.	Fehr and Peers
Date Performed	8/21/2014
Analysis Time Period	PM Peak Hour
Highway	SR-138
From/To	Gorman Post to Private Rd
Jurisdiction	CALTRANS
Analysis Year	2020 NB
Description	STATE ROUTE 138 HCS ANALYSIS

Input Data

Highway class	Class 1		Peak hour factor, PHF	0.90	
Shoulder width	10.0	ft	% Trucks and buses	15	%
Lane width	12.0	ft	% Trucks crawling	0.0	%
Segment length	2.5	mi	Truck crawl speed	0.0	mi/hr
Terrain type	Level		% Recreational vehicles	20	%
Grade: Length	-	mi	% No-passing zones	20	%
Up/down	-	%	Access point density	1	/mi

Analysis direction volume, Vd 400 veh/h
Opposing direction volume, Vo 400 veh/h

Average Travel Speed

Direction	Analysis(d)		Opposing (o)	
PCE for trucks, ET	1.3		1.3	
PCE for RVs, ER	1.0		1.0	
Heavy-vehicle adj. factor,(note-5) fHV	0.957		0.957	
Grade adj. factor,(note-1) fg	1.00		1.00	
Directional flow rate,(note-2) vi	464	pc/h	464	pc/h

Free-Flow Speed from Field Measurement:		
Field measured speed,(note-3) S FM	-	mi/h
Observed total demand,(note-3) V	-	veh/h
Estimated Free-Flow Speed:		
Base free-flow speed,(note-3) BFFS	60.0	mi/h
Adj. for lane and shoulder width,(note-3) fLS	0.0	mi/h
Adj. for access point density,(note-3) fA	0.3	mi/h
Free-flow speed, FFSd	59.8	mi/h
Adjustment for no-passing zones, fnp	1.3	mi/h
Average travel speed, ATSd	51.3	mi/h
Percent Free Flow Speed, PFFS	85.8	%

Percent Time-Spent-Following

Direction	Analysis(d)		Opposing (o)	
PCE for trucks, ET	1.0		1.0	
PCE for RVs, ER	1.0		1.0	
Heavy-vehicle adjustment factor, fHV	1.000		1.000	
Grade adjustment factor,(note-1) fg	1.00		1.00	
Directional flow rate,(note-2) vi	444	pc/h	444	pc/h
Base percent time-spent-following,(note-4) BPTSFd	46.2	%		
Adjustment for no-passing zones, fnp	31.8			
Percent time-spent-following, PTSFd	62.1	%		

Level of Service and Other Performance Measures

Level of service, LOS	C	
Volume to capacity ratio, v/c	0.20	
Peak 15-min vehicle-miles of travel, VMT15	278	veh-mi
Peak-hour vehicle-miles of travel, VMT60	1000	veh-mi
Peak 15-min total travel time, TT15	5.4	veh-h
Capacity from ATS, CdATS	1627	veh/h
Capacity from PTSF, CdPTSF	1700	veh/h
Directional Capacity	4689	veh/h

Passing Lane Analysis

Total length of analysis segment, Lt	2.5	mi
Length of two-lane highway upstream of the passing lane, Lu	-	mi
Length of passing lane including tapers, Lpl	-	mi
Average travel speed, ATSd (from above)	51.3	mi/h
Percent time-spent-following, PTSFd (from above)	62.1	
Level of service, LOSd (from above)	C	

Average Travel Speed with Passing Lane

Downstream length of two-lane highway within effective length of passing lane for average travel speed, Lde	-	mi
Length of two-lane highway downstream of effective length of the passing lane for average travel speed, Ld	-	mi
Adj. factor for the effect of passing lane on average speed, fpl	-	
Average travel speed including passing lane, ATSpl	-	

Percent Time-Spent-Following with Passing Lane

Downstream length of two-lane highway within effective length of passing lane for percent time-spent-following, Lde	-	mi
Length of two-lane highway downstream of effective length of the passing lane for percent time-spent-following, Ld	-	mi
Adj. factor for the effect of passing lane on percent time-spent-following, fpl	-	
Percent time-spent-following including passing lane, PTSFpl	-	%

Level of Service and Other Performance Measures with Passing Lane

Level of service including passing lane, LOSpl	-	
Peak 15-min total travel time, TT15	-	veh-h

Bicycle Level of Service

Posted speed limit, Sp	55
Percent of segment with occupied on-highway parking	0
Pavement rating, P	3
Flow rate in outside lane, vOL	444.4
Effective width of outside lane, We	32.00
Effective speed factor, St	4.79
Bicycle LOS Score, BLOS	5.08
Bicycle LOS	E

Notes:

1. Note that the adjustment factor for level terrain is 1.00, as level terrain is one of the base conditions. For the purpose of grade adjustment, specific dewngrade segments are treated as level terrain.
2. If vi (vd or vo) >= 1,700 pc/h, terminate analysis-the LOS is F.
3. For the analysis direction only and for v>200 veh/h.
4. For the analysis direction only.
5. Use alternative Exhibit 15-14 if some trucks operate at crawl speeds on a specific downgrade.

Phone: Fax:
E-Mail:

Directional Two-Lane Highway Segment Analysis

Analyst	ACS
Agency/Co.	Fehr and Peers
Date Performed	8/21/2014
Analysis Time Period	AM Peak Hour
Highway	SR-138
From/To	Private Rd to 300th St
Jurisdiction	CALTRANS
Analysis Year	2020 NB
Description	STATE ROUTE 138 HCS ANALYSIS

Input Data

Highway class	Class 1		Peak hour factor, PHF	0.72	
Shoulder width	10.0	ft	% Trucks and buses	15	%
Lane width	12.0	ft	% Trucks crawling	0.0	%
Segment length	4.4	mi	Truck crawl speed	0.0	mi/hr
Terrain type	Level		% Recreational vehicles	20	%
Grade: Length	-	mi	% No-passing zones	20	%
Up/down	-	%	Access point density	1	/mi

Analysis direction volume, Vd 260 veh/h
Opposing direction volume, Vo 330 veh/h

Average Travel Speed

Direction	Analysis(d)		Opposing (o)	
PCE for trucks, ET	1.3		1.2	
PCE for RVs, ER	1.0		1.0	
Heavy-vehicle adj. factor,(note-5) fHV	0.957		0.971	
Grade adj. factor,(note-1) fg	1.00		1.00	
Directional flow rate,(note-2) vi	377	pc/h	472	pc/h

Free-Flow Speed from Field Measurement:		
Field measured speed,(note-3) S FM	-	mi/h
Observed total demand,(note-3) V	-	veh/h
Estimated Free-Flow Speed:		
Base free-flow speed,(note-3) BFFS	60.0	mi/h
Adj. for lane and shoulder width,(note-3) fLS	0.0	mi/h
Adj. for access point density,(note-3) fA	0.3	mi/h
Free-flow speed, FFSd	59.8	mi/h
Adjustment for no-passing zones, fnp	1.3	mi/h
Average travel speed, ATSd	51.9	mi/h
Percent Free Flow Speed, PFFS	86.8	%

Percent Time-Spent-Following

Direction	Analysis(d)	Opposing (o)
PCE for trucks, ET	1.1	1.0
PCE for RVs, ER	1.0	1.0
Heavy-vehicle adjustment factor, fHV	0.985	1.000
Grade adjustment factor,(note-1) fg	1.00	1.00
Directional flow rate,(note-2) vi	367 pc/h	458 pc/h

Base percent time-spent-following,(note-4) BPTSFd	41.3	%
Adjustment for no-passing zones, fnp	30.0	
Percent time-spent-following, PTSFd	54.6	%

Level of Service and Other Performance Measures

Level of service, LOS	C	
Volume to capacity ratio, v/c	0.18	
Peak 15-min vehicle-miles of travel, VMT15	397	veh-mi
Peak-hour vehicle-miles of travel, VMT60	1144	veh-mi
Peak 15-min total travel time, TT15	7.7	veh-h
Capacity from ATS, CdATS	1651	veh/h
Capacity from PTSF, CdPTSF	1700	veh/h
Directional Capacity	4619	veh/h

Passing Lane Analysis

Total length of analysis segment, Lt	4.4	mi
Length of two-lane highway upstream of the passing lane, Lu	-	mi
Length of passing lane including tapers, Lpl	-	mi
Average travel speed, ATSd (from above)	51.9	mi/h
Percent time-spent-following, PTSFd (from above)	54.6	
Level of service, LOSd (from above)	C	

Average Travel Speed with Passing Lane

Downstream length of two-lane highway within effective length of passing lane for average travel speed, Lde	-	mi
Length of two-lane highway downstream of effective length of the passing lane for average travel speed, Ld	-	mi
Adj. factor for the effect of passing lane on average speed, fpl	-	
Average travel speed including passing lane, ATSpl	-	

Percent Time-Spent-Following with Passing Lane

Downstream length of two-lane highway within effective length of passing lane for percent time-spent-following, Lde	-	mi
Length of two-lane highway downstream of effective length of the passing lane for percent time-spent-following, Ld	-	mi
Adj. factor for the effect of passing lane on percent time-spent-following, fpl	-	
Percent time-spent-following including passing lane, PTSFpl	-	%

Level of Service and Other Performance Measures with Passing Lane

Level of service including passing lane, LOSpl	-	
Peak 15-min total travel time, TT15	-	veh-h

Bicycle Level of Service

Posted speed limit, Sp	55
Percent of segment with occupied on-highway parking	0
Pavement rating, P	3
Flow rate in outside lane, vOL	361.1
Effective width of outside lane, We	32.00
Effective speed factor, St	4.79
Bicycle LOS Score, BLOS	4.97
Bicycle LOS	E

Notes:

1. Note that the adjustment factor for level terrain is 1.00, as level terrain is one of the base conditions. For the purpose of grade adjustment, specific dewngrade segments are treated as level terrain.
2. If vi (vd or vo) >= 1,700 pc/h, terminate analysis-the LOS is F.
3. For the analysis direction only and for v>200 veh/h.
4. For the analysis direction only.
5. Use alternative Exhibit 15-14 if some trucks operate at crawl speeds on a specific downgrade.

Phone: Fax:
E-Mail:

Directional Two-Lane Highway Segment Analysis

Analyst	ACS
Agency/Co.	Fehr and Peers
Date Performed	8/21/2014
Analysis Time Period	PM Peak Hour
Highway	SR-138
From/To	Private Rd to 300th St
Jurisdiction	CALTRANS
Analysis Year	2020 NB
Description	STATE ROUTE 138 HCS ANALYSIS

Input Data

Highway class	Class 1		Peak hour factor, PHF	0.77	
Shoulder width	10.0	ft	% Trucks and buses	15	%
Lane width	12.0	ft	% Trucks crawling	0.0	%
Segment length	4.4	mi	Truck crawl speed	0.0	mi/hr
Terrain type	Level		% Recreational vehicles	20	%
Grade: Length	-	mi	% No-passing zones	20	%
Up/down	-	%	Access point density	1	/mi

Analysis direction volume, Vd 410 veh/h
Opposing direction volume, Vo 320 veh/h

Average Travel Speed

Direction	Analysis(d)		Opposing (o)	
PCE for trucks, ET	1.2		1.3	
PCE for RVs, ER	1.0		1.0	
Heavy-vehicle adj. factor,(note-5) fHV	0.971		0.957	
Grade adj. factor,(note-1) fg	1.00		1.00	
Directional flow rate,(note-2) vi	548	pc/h	434	pc/h

Free-Flow Speed from Field Measurement:		
Field measured speed,(note-3) S FM	-	mi/h
Observed total demand,(note-3) V	-	veh/h
Estimated Free-Flow Speed:		
Base free-flow speed,(note-3) BFFS	60.0	mi/h
Adj. for lane and shoulder width,(note-3) fLS	0.0	mi/h
Adj. for access point density,(note-3) fA	0.3	mi/h
Free-flow speed, FFSd	59.8	mi/h
Adjustment for no-passing zones, fnp	1.3	mi/h
Average travel speed, ATSd	50.8	mi/h
Percent Free Flow Speed, PFFS	85.0	%

Percent Time-Spent-Following

Direction	Analysis(d)		Opposing (o)	
PCE for trucks, ET	1.0		1.0	
PCE for RVs, ER	1.0		1.0	
Heavy-vehicle adjustment factor, fHV	1.000		1.000	
Grade adjustment factor,(note-1) fg	1.00		1.00	
Directional flow rate,(note-2) vi	532	pc/h	416	pc/h
Base percent time-spent-following,(note-4) BPTSFd	52.1	%		
Adjustment for no-passing zones, fnp	27.6			
Percent time-spent-following, PTSFd	67.6	%		

Level of Service and Other Performance Measures

Level of service, LOS	D	
Volume to capacity ratio, v/c	0.22	
Peak 15-min vehicle-miles of travel, VMT15	586	veh-mi
Peak-hour vehicle-miles of travel, VMT60	1804	veh-mi
Peak 15-min total travel time, TT15	11.5	veh-h
Capacity from ATS, CdATS	1627	veh/h
Capacity from PTSF, CdPTSF	1700	veh/h
Directional Capacity	4542	veh/h

Passing Lane Analysis

Total length of analysis segment, Lt	4.4	mi
Length of two-lane highway upstream of the passing lane, Lu	-	mi
Length of passing lane including tapers, Lpl	-	mi
Average travel speed, ATSd (from above)	50.8	mi/h
Percent time-spent-following, PTSFd (from above)	67.6	
Level of service, LOSd (from above)	D	

Average Travel Speed with Passing Lane

Downstream length of two-lane highway within effective length of passing lane for average travel speed, Lde	-	mi
Length of two-lane highway downstream of effective length of the passing lane for average travel speed, Ld	-	mi
Adj. factor for the effect of passing lane on average speed, fpl	-	
Average travel speed including passing lane, ATSpl	-	

Percent Time-Spent-Following with Passing Lane

Downstream length of two-lane highway within effective length of passing lane for percent time-spent-following, Lde	-	mi
Length of two-lane highway downstream of effective length of the passing lane for percent time-spent-following, Ld	-	mi
Adj. factor for the effect of passing lane on percent time-spent-following, fpl	-	
Percent time-spent-following including passing lane, PTSFpl	-	%

Level of Service and Other Performance Measures with Passing Lane

Level of service including passing lane, LOSpl	-	
Peak 15-min total travel time, TT15	-	veh-h

Bicycle Level of Service

Posted speed limit, Sp	55
Percent of segment with occupied on-highway parking	0
Pavement rating, P	3
Flow rate in outside lane, vOL	532.5
Effective width of outside lane, We	32.00
Effective speed factor, St	4.79
Bicycle LOS Score, BLOS	5.17
Bicycle LOS	E

Notes:

1. Note that the adjustment factor for level terrain is 1.00, as level terrain is one of the base conditions. For the purpose of grade adjustment, specific dewngrade segments are treated as level terrain.
2. If vi (vd or vo) >= 1,700 pc/h, terminate analysis-the LOS is F.
3. For the analysis direction only and for v>200 veh/h.
4. For the analysis direction only.
5. Use alternative Exhibit 15-14 if some trucks operate at crawl speeds on a specific downgrade.

Phone: Fax:
E-Mail:

Directional Two-Lane Highway Segment Analysis

Analyst	ACS
Agency/Co.	Fehr and Peers
Date Performed	8/21/2014
Analysis Time Period	AM Peak Hour
Highway	SR-138
From/To	280th St to 270th St
Jurisdiction	CALTRANS
Analysis Year	2020 NB
Description	STATE ROUTE 138 HCS ANALYSIS

Input Data

Highway class	Class 1		Peak hour factor, PHF	0.97	
Shoulder width	10.0	ft	% Trucks and buses	15	%
Lane width	12.0	ft	% Trucks crawling	0.0	%
Segment length	1.3	mi	Truck crawl speed	0.0	mi/hr
Terrain type	Level		% Recreational vehicles	20	%
Grade: Length	-	mi	% No-passing zones	20	%
Up/down	-	%	Access point density	2	/mi

Analysis direction volume, Vd 200 veh/h
Opposing direction volume, Vo 230 veh/h

Average Travel Speed

Direction	Analysis(d)		Opposing (o)	
PCE for trucks, ET	1.5		1.5	
PCE for RVs, ER	1.0		1.0	
Heavy-vehicle adj. factor,(note-5) fHV	0.930		0.930	
Grade adj. factor,(note-1) fg	1.00		1.00	
Directional flow rate,(note-2) vi	222	pc/h	255	pc/h

Free-Flow Speed from Field Measurement:		
Field measured speed,(note-3) S FM	-	mi/h
Observed total demand,(note-3) V	-	veh/h
Estimated Free-Flow Speed:		
Base free-flow speed,(note-3) BFFS	60.0	mi/h
Adj. for lane and shoulder width,(note-3) fLS	0.0	mi/h
Adj. for access point density,(note-3) fA	0.5	mi/h
Free-flow speed, FFSd	59.5	mi/h
Adjustment for no-passing zones, fnp	1.7	mi/h
Average travel speed, ATSd	54.1	mi/h
Percent Free Flow Speed, PFFS	90.9	%

Percent Time-Spent-Following

Direction	Analysis(d)		Opposing (o)	
PCE for trucks, ET	1.1		1.1	
PCE for RVs, ER	1.0		1.0	
Heavy-vehicle adjustment factor, fHV	0.985		0.985	
Grade adjustment factor,(note-1) fg	1.00		1.00	
Directional flow rate,(note-2) vi	209	pc/h	241	pc/h
Base percent time-spent-following,(note-4) BPTSFd	24.0	%		
Adjustment for no-passing zones, fnp	38.9			
Percent time-spent-following, PTSFd	42.1	%		

Level of Service and Other Performance Measures

Level of service, LOS	B	
Volume to capacity ratio, v/c	0.16	
Peak 15-min vehicle-miles of travel, VMT15	67	veh-mi
Peak-hour vehicle-miles of travel, VMT60	260	veh-mi
Peak 15-min total travel time, TT15	1.2	veh-h
Capacity from ATS, CdATS	1581	veh/h
Capacity from PTSF, CdPTSF	1675	veh/h
Directional Capacity	2957	veh/h

Passing Lane Analysis

Total length of analysis segment, Lt	1.3	mi
Length of two-lane highway upstream of the passing lane, Lu	-	mi
Length of passing lane including tapers, Lpl	-	mi
Average travel speed, ATSd (from above)	54.1	mi/h
Percent time-spent-following, PTSFd (from above)	42.1	
Level of service, LOSd (from above)	B	

Average Travel Speed with Passing Lane

Downstream length of two-lane highway within effective length of passing lane for average travel speed, Lde	-	mi
Length of two-lane highway downstream of effective length of the passing lane for average travel speed, Ld	-	mi
Adj. factor for the effect of passing lane on average speed, fpl	-	
Average travel speed including passing lane, ATSpl	-	

Percent Time-Spent-Following with Passing Lane

Downstream length of two-lane highway within effective length of passing lane for percent time-spent-following, Lde	-	mi
Length of two-lane highway downstream of effective length of the passing lane for percent time-spent-following, Ld	-	mi
Adj. factor for the effect of passing lane on percent time-spent-following, fpl	-	
Percent time-spent-following including passing lane, PTSFpl	-	%

Level of Service and Other Performance Measures with Passing Lane

Level of service including passing lane, LOSpl	-	
Peak 15-min total travel time, TT15	-	veh-h

Bicycle Level of Service

Posted speed limit, Sp	55
Percent of segment with occupied on-highway parking	0
Pavement rating, P	3
Flow rate in outside lane, vOL	206.2
Effective width of outside lane, We	32.00
Effective speed factor, St	4.79
Bicycle LOS Score, BLOS	4.69
Bicycle LOS	E

Notes:

1. Note that the adjustment factor for level terrain is 1.00, as level terrain is one of the base conditions. For the purpose of grade adjustment, specific dewngrade segments are treated as level terrain.
2. If vi (vd or vo) >= 1,700 pc/h, terminate analysis-the LOS is F.
3. For the analysis direction only and for v>200 veh/h.
4. For the analysis direction only.
5. Use alternative Exhibit 15-14 if some trucks operate at crawl speeds on a specific downgrade.

Phone: Fax:
E-Mail:

Directional Two-Lane Highway Segment Analysis

Analyst	ACS
Agency/Co.	Fehr and Peers
Date Performed	8/21/2014
Analysis Time Period	PM Peak Hour
Highway	SR-138
From/To	280th St to 270th St
Jurisdiction	CALTRANS
Analysis Year	2020 NB
Description	STATE ROUTE 138 HCS ANALYSIS

Input Data

Highway class	Class 1		Peak hour factor, PHF	0.90	
Shoulder width	10.0	ft	% Trucks and buses	15	%
Lane width	12.0	ft	% Trucks crawling	0.0	%
Segment length	1.3	mi	Truck crawl speed	0.0	mi/hr
Terrain type	Level		% Recreational vehicles	20	%
Grade: Length	-	mi	% No-passing zones	20	%
Up/down	-	%	Access point density	2	/mi

Analysis direction volume, Vd 260 veh/h
Opposing direction volume, Vo 240 veh/h

Average Travel Speed

Direction	Analysis(d)		Opposing (o)	
PCE for trucks, ET	1.4		1.4	
PCE for RVs, ER	1.0		1.0	
Heavy-vehicle adj. factor,(note-5) fHV	0.943		0.943	
Grade adj. factor,(note-1) fg	1.00		1.00	
Directional flow rate,(note-2) vi	306	pc/h	283	pc/h

Free-Flow Speed from Field Measurement:		
Field measured speed,(note-3) S FM	-	mi/h
Observed total demand,(note-3) V	-	veh/h
Estimated Free-Flow Speed:		
Base free-flow speed,(note-3) BFFS	60.0	mi/h
Adj. for lane and shoulder width,(note-3) fLS	0.0	mi/h
Adj. for access point density,(note-3) fA	0.5	mi/h
Free-flow speed, FFSd	59.5	mi/h
Adjustment for no-passing zones, fnp	1.7	mi/h
Average travel speed, ATSd	53.3	mi/h
Percent Free Flow Speed, PFFS	89.5	%

Percent Time-Spent-Following

Direction	Analysis(d)		Opposing (o)	
PCE for trucks, ET	1.1		1.1	
PCE for RVs, ER	1.0		1.0	
Heavy-vehicle adjustment factor, fHV	0.985		0.985	
Grade adjustment factor,(note-1) fg	1.00		1.00	
Directional flow rate,(note-2) vi	293	pc/h	271	pc/h
Base percent time-spent-following,(note-4) BPTSFd	32.0	%		
Adjustment for no-passing zones, fnp	38.3			
Percent time-spent-following, PTSFd	51.9	%		

Level of Service and Other Performance Measures

Level of service, LOS	C	
Volume to capacity ratio, v/c	0.13	
Peak 15-min vehicle-miles of travel, VMT15	94	veh-mi
Peak-hour vehicle-miles of travel, VMT60	338	veh-mi
Peak 15-min total travel time, TT15	1.8	veh-h
Capacity from ATS, CdATS	1603	veh/h
Capacity from PTSF, CdPTSF	1675	veh/h
Directional Capacity	4688	veh/h

Passing Lane Analysis

Total length of analysis segment, Lt	1.3	mi
Length of two-lane highway upstream of the passing lane, Lu	-	mi
Length of passing lane including tapers, Lpl	-	mi
Average travel speed, ATSd (from above)	53.3	mi/h
Percent time-spent-following, PTSFd (from above)	51.9	
Level of service, LOSd (from above)	C	

Average Travel Speed with Passing Lane

Downstream length of two-lane highway within effective length of passing lane for average travel speed, Lde	-	mi
Length of two-lane highway downstream of effective length of the passing lane for average travel speed, Ld	-	mi
Adj. factor for the effect of passing lane on average speed, fpl	-	
Average travel speed including passing lane, ATSpl	-	

Percent Time-Spent-Following with Passing Lane

Downstream length of two-lane highway within effective length of passing lane for percent time-spent-following, Lde	-	mi
Length of two-lane highway downstream of effective length of the passing lane for percent time-spent-following, Ld	-	mi
Adj. factor for the effect of passing lane on percent time-spent-following, fpl	-	
Percent time-spent-following including passing lane, PTSFpl	-	%

Level of Service and Other Performance Measures with Passing Lane

Level of service including passing lane, LOSpl	-	
Peak 15-min total travel time, TT15	-	veh-h

Bicycle Level of Service

Posted speed limit, Sp	55
Percent of segment with occupied on-highway parking	0
Pavement rating, P	3
Flow rate in outside lane, vOL	288.9
Effective width of outside lane, We	32.00
Effective speed factor, St	4.79
Bicycle LOS Score, BLOS	4.86
Bicycle LOS	E

Notes:

1. Note that the adjustment factor for level terrain is 1.00, as level terrain is one of the base conditions. For the purpose of grade adjustment, specific dewngrade segments are treated as level terrain.
2. If vi (vd or vo) >= 1,700 pc/h, terminate analysis-the LOS is F.
3. For the analysis direction only and for v>200 veh/h.
4. For the analysis direction only.
5. Use alternative Exhibit 15-14 if some trucks operate at crawl speeds on a specific downgrade.

Phone: Fax:
E-Mail:

Directional Two-Lane Highway Segment Analysis

Analyst	ACS
Agency/Co.	Fehr and Peers
Date Performed	8/21/2014
Analysis Time Period	AM Peak Hour
Highway	SR-138
From/To	Three Points Rd to 245th St
Jurisdiction	CALTRANS
Analysis Year	2020 NB
Description	STATE ROUTE 138 HCS ANALYSIS

Input Data

Highway class	Class 1		Peak hour factor, PHF	0.79	
Shoulder width	10.0	ft	% Trucks and buses	15	%
Lane width	12.0	ft	% Trucks crawling	0.0	%
Segment length	1.6	mi	Truck crawl speed	0.0	mi/hr
Terrain type	Level		% Recreational vehicles	20	%
Grade: Length	-	mi	% No-passing zones	20	%
Up/down	-	%	Access point density	3	/mi

Analysis direction volume, Vd 210 veh/h
Opposing direction volume, Vo 230 veh/h

Average Travel Speed

Direction	Analysis(d)		Opposing (o)	
PCE for trucks, ET	1.4		1.4	
PCE for RVs, ER	1.0		1.0	
Heavy-vehicle adj. factor,(note-5) fHV	0.943		0.943	
Grade adj. factor,(note-1) fg	1.00		1.00	
Directional flow rate,(note-2) vi	282	pc/h	309	pc/h

Free-Flow Speed from Field Measurement:		
Field measured speed,(note-3) S FM	-	mi/h
Observed total demand,(note-3) V	-	veh/h
Estimated Free-Flow Speed:		
Base free-flow speed,(note-3) BFFS	60.0	mi/h
Adj. for lane and shoulder width,(note-3) fLS	0.0	mi/h
Adj. for access point density,(note-3) fA	0.8	mi/h
Free-flow speed, FFSd	59.3	mi/h
Adjustment for no-passing zones, fnp	1.6	mi/h
Average travel speed, ATSd	53.1	mi/h
Percent Free Flow Speed, PFFS	89.6	%

Percent Time-Spent-Following

Direction	Analysis(d)		Opposing (o)	
PCE for trucks, ET	1.1		1.1	
PCE for RVs, ER	1.0		1.0	
Heavy-vehicle adjustment factor, fHV	0.985		0.985	
Grade adjustment factor,(note-1) fg	1.00		1.00	
Directional flow rate,(note-2) vi	270	pc/h	296	pc/h
Base percent time-spent-following,(note-4) BPTSFd	30.6	%		
Adjustment for no-passing zones, fnp	38.2			
Percent time-spent-following, PTSFd	48.8	%		

Level of Service and Other Performance Measures

Level of service, LOS	B	
Volume to capacity ratio, v/c	0.13	
Peak 15-min vehicle-miles of travel, VMT15	106	veh-mi
Peak-hour vehicle-miles of travel, VMT60	336	veh-mi
Peak 15-min total travel time, TT15	2.0	veh-h
Capacity from ATS, CdATS	1603	veh/h
Capacity from PTSF, CdPTSF	1675	veh/h
Directional Capacity	4669	veh/h

Passing Lane Analysis

Total length of analysis segment, Lt	1.6	mi
Length of two-lane highway upstream of the passing lane, Lu	-	mi
Length of passing lane including tapers, Lpl	-	mi
Average travel speed, ATSd (from above)	53.1	mi/h
Percent time-spent-following, PTSFd (from above)	48.8	
Level of service, LOSd (from above)	B	

Average Travel Speed with Passing Lane

Downstream length of two-lane highway within effective length of passing lane for average travel speed, Lde	-	mi
Length of two-lane highway downstream of effective length of the passing lane for average travel speed, Ld	-	mi
Adj. factor for the effect of passing lane on average speed, fpl	-	
Average travel speed including passing lane, ATSpl	-	

Percent Time-Spent-Following with Passing Lane

Downstream length of two-lane highway within effective length of passing lane for percent time-spent-following, Lde	-	mi
Length of two-lane highway downstream of effective length of the passing lane for percent time-spent-following, Ld	-	mi
Adj. factor for the effect of passing lane on percent time-spent-following, fpl	-	
Percent time-spent-following including passing lane, PTSFpl	-	%

Level of Service and Other Performance Measures with Passing Lane

Level of service including passing lane, LOSpl	-	
Peak 15-min total travel time, TT15	-	veh-h

Bicycle Level of Service

Posted speed limit, Sp	55
Percent of segment with occupied on-highway parking	0
Pavement rating, P	3
Flow rate in outside lane, vOL	265.8
Effective width of outside lane, We	32.00
Effective speed factor, St	4.79
Bicycle LOS Score, BLOS	4.82
Bicycle LOS	E

Notes:

1. Note that the adjustment factor for level terrain is 1.00, as level terrain is one of the base conditions. For the purpose of grade adjustment, specific dewngrade segments are treated as level terrain.
2. If vi (vd or vo) >= 1,700 pc/h, terminate analysis-the LOS is F.
3. For the analysis direction only and for v>200 veh/h.
4. For the analysis direction only.
5. Use alternative Exhibit 15-14 if some trucks operate at crawl speeds on a specific downgrade.

Phone: Fax:
E-Mail:

Directional Two-Lane Highway Segment Analysis

Analyst	ACS
Agency/Co.	Fehr and Peers
Date Performed	8/21/2014
Analysis Time Period	PM Peak Hour
Highway	SR-138
From/To	Three Points Rd to 245th St
Jurisdiction	CALTRANS
Analysis Year	2020 NB
Description	STATE ROUTE 138 HCS ANALYSIS

Input Data

Highway class	Class 1		Peak hour factor, PHF	0.89	
Shoulder width	10.0	ft	% Trucks and buses	15	%
Lane width	12.0	ft	% Trucks crawling	0.0	%
Segment length	1.6	mi	Truck crawl speed	0.0	mi/hr
Terrain type	Level		% Recreational vehicles	20	%
Grade: Length	-	mi	% No-passing zones	20	%
Up/down	-	%	Access point density	3	/mi

Analysis direction volume, Vd 290 veh/h
Opposing direction volume, Vo 260 veh/h

Average Travel Speed

Direction	Analysis(d)		Opposing (o)	
PCE for trucks, ET	1.4		1.4	
PCE for RVs, ER	1.0		1.0	
Heavy-vehicle adj. factor,(note-5) fHV	0.943		0.943	
Grade adj. factor,(note-1) fg	1.00		1.00	
Directional flow rate,(note-2) vi	346	pc/h	310	pc/h

Free-Flow Speed from Field Measurement:		
Field measured speed,(note-3) S FM	-	mi/h
Observed total demand,(note-3) V	-	veh/h
Estimated Free-Flow Speed:		
Base free-flow speed,(note-3) BFFS	60.0	mi/h
Adj. for lane and shoulder width,(note-3) fLS	0.0	mi/h
Adj. for access point density,(note-3) fA	0.8	mi/h
Free-flow speed, FFSd	59.3	mi/h
Adjustment for no-passing zones, fnp	1.6	mi/h
Average travel speed, ATSd	52.6	mi/h
Percent Free Flow Speed, PFFS	88.7	%

Percent Time-Spent-Following

Direction	Analysis(d)		Opposing (o)	
PCE for trucks, ET	1.1		1.1	
PCE for RVs, ER	1.0		1.0	
Heavy-vehicle adjustment factor, fHV	0.985		0.985	
Grade adjustment factor,(note-1) fg	1.00		1.00	
Directional flow rate,(note-2) vi	331	pc/h	297	pc/h
Base percent time-spent-following,(note-4) BPTSFd	35.8	%		
Adjustment for no-passing zones, fnp	37.1			
Percent time-spent-following, PTSFd	55.4	%		

Level of Service and Other Performance Measures

Level of service, LOS	C	
Volume to capacity ratio, v/c	0.14	
Peak 15-min vehicle-miles of travel, VMT15	130	veh-mi
Peak-hour vehicle-miles of travel, VMT60	464	veh-mi
Peak 15-min total travel time, TT15	2.5	veh-h
Capacity from ATS, CdATS	1603	veh/h
Capacity from PTSF, CdPTSF	1675	veh/h
Directional Capacity	4642	veh/h

Passing Lane Analysis

Total length of analysis segment, Lt	1.6	mi
Length of two-lane highway upstream of the passing lane, Lu	-	mi
Length of passing lane including tapers, Lpl	-	mi
Average travel speed, ATSd (from above)	52.6	mi/h
Percent time-spent-following, PTSFd (from above)	55.4	
Level of service, LOSd (from above)	C	

Average Travel Speed with Passing Lane

Downstream length of two-lane highway within effective length of passing lane for average travel speed, Lde	-	mi
Length of two-lane highway downstream of effective length of the passing lane for average travel speed, Ld	-	mi
Adj. factor for the effect of passing lane on average speed, fpl	-	
Average travel speed including passing lane, ATSpl	-	

Percent Time-Spent-Following with Passing Lane

Downstream length of two-lane highway within effective length of passing lane for percent time-spent-following, Lde	-	mi
Length of two-lane highway downstream of effective length of the passing lane for percent time-spent-following, Ld	-	mi
Adj. factor for the effect of passing lane on percent time-spent-following, fpl	-	
Percent time-spent-following including passing lane, PTSFpl	-	%

Level of Service and Other Performance Measures with Passing Lane

Level of service including passing lane, LOSpl	-	
Peak 15-min total travel time, TT15	-	veh-h

Bicycle Level of Service

Posted speed limit, Sp	55
Percent of segment with occupied on-highway parking	0
Pavement rating, P	3
Flow rate in outside lane, vOL	325.8
Effective width of outside lane, We	32.00
Effective speed factor, St	4.79
Bicycle LOS Score, BLOS	4.92
Bicycle LOS	E

Notes:

1. Note that the adjustment factor for level terrain is 1.00, as level terrain is one of the base conditions. For the purpose of grade adjustment, specific dewngrade segments are treated as level terrain.
2. If vi (vd or vo) >= 1,700 pc/h, terminate analysis-the LOS is F.
3. For the analysis direction only and for v>200 veh/h.
4. For the analysis direction only.
5. Use alternative Exhibit 15-14 if some trucks operate at crawl speeds on a specific downgrade.

Phone: Fax:
E-Mail:

Directional Two-Lane Highway Segment Analysis

Analyst	ACS
Agency/Co.	Fehr and Peers
Date Performed	8/21/2014
Analysis Time Period	AM Peak Hour
Highway	SR-138
From/To	230th St to 190th St
Jurisdiction	CALTRANS
Analysis Year	2020 NB
Description	STATE ROUTE 138 HCS ANALYSIS

Input Data

Highway class	Class 1		Peak hour factor, PHF	0.82	
Shoulder width	10.0	ft	% Trucks and buses	20	%
Lane width	12.0	ft	% Trucks crawling	0.0	%
Segment length	1.6	mi	Truck crawl speed	0.0	mi/hr
Terrain type	Level		% Recreational vehicles	20	%
Grade: Length	-	mi	% No-passing zones	20	%
Up/down	-	%	Access point density	2	/mi

Analysis direction volume, Vd 190 veh/h
Opposing direction volume, Vo 230 veh/h

Average Travel Speed

Direction	Analysis(d)		Opposing (o)	
PCE for trucks, ET	1.5		1.4	
PCE for RVs, ER	1.0		1.0	
Heavy-vehicle adj. factor,(note-5) fHV	0.909		0.926	
Grade adj. factor,(note-1) fg	1.00		1.00	
Directional flow rate,(note-2) vi	255	pc/h	303	pc/h

Free-Flow Speed from Field Measurement:		
Field measured speed,(note-3) S FM	-	mi/h
Observed total demand,(note-3) V	-	veh/h
Estimated Free-Flow Speed:		
Base free-flow speed,(note-3) BFFS	60.0	mi/h
Adj. for lane and shoulder width,(note-3) fLS	0.0	mi/h
Adj. for access point density,(note-3) fA	0.5	mi/h
Free-flow speed, FFSd	59.5	mi/h
Adjustment for no-passing zones, fnp	1.6	mi/h
Average travel speed, ATSd	53.6	mi/h
Percent Free Flow Speed, PFFS	90.0	%

Percent Time-Spent-Following

Direction	Analysis(d)		Opposing (o)	
PCE for trucks, ET	1.1		1.1	
PCE for RVs, ER	1.0		1.0	
Heavy-vehicle adjustment factor, fHV	0.980		0.980	
Grade adjustment factor,(note-1) fg	1.00		1.00	
Directional flow rate,(note-2) vi	236	pc/h	286	pc/h
Base percent time-spent-following,(note-4) BPTSFd	26.4	%		
Adjustment for no-passing zones, fnp	38.0			
Percent time-spent-following, PTSFd	43.6	%		

Level of Service and Other Performance Measures

Level of service, LOS	B	
Volume to capacity ratio, v/c	0.19	
Peak 15-min vehicle-miles of travel, VMT15	93	veh-mi
Peak-hour vehicle-miles of travel, VMT60	304	veh-mi
Peak 15-min total travel time, TT15	1.7	veh-h
Capacity from ATS, CdATS	1574	veh/h
Capacity from PTSF, CdPTSF	1667	veh/h
Directional Capacity	2899	veh/h

Passing Lane Analysis

Total length of analysis segment, Lt	1.6	mi
Length of two-lane highway upstream of the passing lane, Lu	-	mi
Length of passing lane including tapers, Lpl	-	mi
Average travel speed, ATSd (from above)	53.6	mi/h
Percent time-spent-following, PTSFd (from above)	43.6	
Level of service, LOSd (from above)	B	

Average Travel Speed with Passing Lane

Downstream length of two-lane highway within effective length of passing lane for average travel speed, Lde	-	mi
Length of two-lane highway downstream of effective length of the passing lane for average travel speed, Ld	-	mi
Adj. factor for the effect of passing lane on average speed, fpl	-	
Average travel speed including passing lane, ATSpl	-	

Percent Time-Spent-Following with Passing Lane

Downstream length of two-lane highway within effective length of passing lane for percent time-spent-following, Lde	-	mi
Length of two-lane highway downstream of effective length of the passing lane for percent time-spent-following, Ld	-	mi
Adj. factor for the effect of passing lane on percent time-spent-following, fpl	-	
Percent time-spent-following including passing lane, PTSFpl	-	%

Level of Service and Other Performance Measures with Passing Lane

Level of service including passing lane, LOSpl	-	
Peak 15-min total travel time, TT15	-	veh-h

Bicycle Level of Service

Posted speed limit, Sp	55
Percent of segment with occupied on-highway parking	0
Pavement rating, P	3
Flow rate in outside lane, vOL	231.7
Effective width of outside lane, We	32.00
Effective speed factor, St	4.79
Bicycle LOS Score, BLOS	7.55
Bicycle LOS	F

Notes:

1. Note that the adjustment factor for level terrain is 1.00, as level terrain is one of the base conditions. For the purpose of grade adjustment, specific dewngrade segments are treated as level terrain.
2. If vi (vd or vo) >= 1,700 pc/h, terminate analysis-the LOS is F.
3. For the analysis direction only and for v>200 veh/h.
4. For the analysis direction only.
5. Use alternative Exhibit 15-14 if some trucks operate at crawl speeds on a specific downgrade.

Phone: Fax:
E-Mail:

Directional Two-Lane Highway Segment Analysis

Analyst	ACS
Agency/Co.	Fehr and Peers
Date Performed	8/21/2014
Analysis Time Period	PM Peak Hour
Highway	SR-138
From/To	230th St to 190th St
Jurisdiction	CALTRANS
Analysis Year	2020 NB
Description	STATE ROUTE 138 HCS ANALYSIS

Input Data

Highway class	Class 1		Peak hour factor, PHF	0.88	
Shoulder width	10.0	ft	% Trucks and buses	20	%
Lane width	12.0	ft	% Trucks crawling	0.0	%
Segment length	1.6	mi	Truck crawl speed	0.0	mi/hr
Terrain type	Level		% Recreational vehicles	20	%
Grade: Length	-	mi	% No-passing zones	20	%
Up/down	-	%	Access point density	2	/mi

Analysis direction volume, Vd 280 veh/h
Opposing direction volume, Vo 270 veh/h

Average Travel Speed

Direction	Analysis(d)		Opposing (o)	
PCE for trucks, ET	1.4		1.4	
PCE for RVs, ER	1.0		1.0	
Heavy-vehicle adj. factor,(note-5) fHV	0.926		0.926	
Grade adj. factor,(note-1) fg	1.00		1.00	
Directional flow rate,(note-2) vi	344	pc/h	331	pc/h

Free-Flow Speed from Field Measurement:		
Field measured speed,(note-3) S FM	-	mi/h
Observed total demand,(note-3) V	-	veh/h
Estimated Free-Flow Speed:		
Base free-flow speed,(note-3) BFFS	60.0	mi/h
Adj. for lane and shoulder width,(note-3) fLS	0.0	mi/h
Adj. for access point density,(note-3) fA	0.5	mi/h
Free-flow speed, FFSd	59.5	mi/h
Adjustment for no-passing zones, fnp	1.6	mi/h
Average travel speed, ATSd	52.7	mi/h
Percent Free Flow Speed, PFFS	88.6	%

Percent Time-Spent-Following

Direction	Analysis(d)		Opposing (o)	
PCE for trucks, ET	1.1		1.1	
PCE for RVs, ER	1.0		1.0	
Heavy-vehicle adjustment factor, fHV	0.980		0.980	
Grade adjustment factor,(note-1) fg	1.00		1.00	
Directional flow rate,(note-2) vi	325	pc/h	313	pc/h
Base percent time-spent-following,(note-4) BPTSFd	36.2	%		
Adjustment for no-passing zones, fnp	37.2			
Percent time-spent-following, PTSFd	55.1	%		

Level of Service and Other Performance Measures

Level of service, LOS	C	
Volume to capacity ratio, v/c	0.22	
Peak 15-min vehicle-miles of travel, VMT15	127	veh-mi
Peak-hour vehicle-miles of travel, VMT60	448	veh-mi
Peak 15-min total travel time, TT15	2.4	veh-h
Capacity from ATS, CdATS	1574	veh/h
Capacity from PTSF, CdPTSF	1667	veh/h
Directional Capacity	3088	veh/h

Passing Lane Analysis

Total length of analysis segment, Lt	1.6	mi
Length of two-lane highway upstream of the passing lane, Lu	-	mi
Length of passing lane including tapers, Lpl	-	mi
Average travel speed, ATSd (from above)	52.7	mi/h
Percent time-spent-following, PTSFd (from above)	55.1	
Level of service, LOSd (from above)	C	

Average Travel Speed with Passing Lane

Downstream length of two-lane highway within effective length of passing lane for average travel speed, Lde	-	mi
Length of two-lane highway downstream of effective length of the passing lane for average travel speed, Ld	-	mi
Adj. factor for the effect of passing lane on average speed, fpl	-	
Average travel speed including passing lane, ATSpl	-	

Percent Time-Spent-Following with Passing Lane

Downstream length of two-lane highway within effective length of passing lane for percent time-spent-following, Lde	-	mi
Length of two-lane highway downstream of effective length of the passing lane for percent time-spent-following, Ld	-	mi
Adj. factor for the effect of passing lane on percent time-spent-following, fpl	-	
Percent time-spent-following including passing lane, PTSFpl	-	%

Level of Service and Other Performance Measures with Passing Lane

Level of service including passing lane, LOSpl	-	
Peak 15-min total travel time, TT15	-	veh-h

Bicycle Level of Service

Posted speed limit, Sp	55
Percent of segment with occupied on-highway parking	0
Pavement rating, P	3
Flow rate in outside lane, vOL	318.2
Effective width of outside lane, We	32.00
Effective speed factor, St	4.79
Bicycle LOS Score, BLOS	7.71
Bicycle LOS	F

Notes:

1. Note that the adjustment factor for level terrain is 1.00, as level terrain is one of the base conditions. For the purpose of grade adjustment, specific dewngrade segments are treated as level terrain.
2. If vi (vd or vo) >= 1,700 pc/h, terminate analysis-the LOS is F.
3. For the analysis direction only and for v>200 veh/h.
4. For the analysis direction only.
5. Use alternative Exhibit 15-14 if some trucks operate at crawl speeds on a specific downgrade.

Phone: Fax:
E-Mail:

Directional Two-Lane Highway Segment Analysis

Analyst	ACS
Agency/Co.	Fehr and Peers
Date Performed	8/21/2014
Analysis Time Period	AM Peak Hour
Highway	SR-138
From/To	190th St to 130th St
Jurisdiction	CALTRANS
Analysis Year	2020 NB
Description	STATE ROUTE 138 HCS ANALYSIS

Input Data

Highway class	Class 1		Peak hour factor, PHF	0.72	
Shoulder width	10.0	ft	% Trucks and buses	20	%
Lane width	12.0	ft	% Trucks crawling	0.0	%
Segment length	6.0	mi	Truck crawl speed	0.0	mi/hr
Terrain type	Level		% Recreational vehicles	20	%
Grade: Length	-	mi	% No-passing zones	20	%
Up/down	-	%	Access point density	2	/mi

Analysis direction volume, Vd 150 veh/h
Opposing direction volume, Vo 230 veh/h

Average Travel Speed

Direction	Analysis(d)		Opposing (o)	
PCE for trucks, ET	1.5		1.4	
PCE for RVs, ER	1.0		1.0	
Heavy-vehicle adj. factor,(note-5) fHV	0.909		0.926	
Grade adj. factor,(note-1) fg	1.00		1.00	
Directional flow rate,(note-2) vi	229	pc/h	345	pc/h

Free-Flow Speed from Field Measurement:		
Field measured speed,(note-3) S FM	-	mi/h
Observed total demand,(note-3) V	-	veh/h
Estimated Free-Flow Speed:		
Base free-flow speed,(note-3) BFFS	60.0	mi/h
Adj. for lane and shoulder width,(note-3) fLS	0.0	mi/h
Adj. for access point density,(note-3) fA	0.5	mi/h
Free-flow speed, FFSd	59.5	mi/h
Adjustment for no-passing zones, fnp	1.5	mi/h
Average travel speed, ATSd	53.5	mi/h
Percent Free Flow Speed, PFFS	90.0	%

Percent Time-Spent-Following

Direction	Analysis(d)		Opposing (o)	
PCE for trucks, ET	1.1		1.1	
PCE for RVs, ER	1.0		1.0	
Heavy-vehicle adjustment factor, fHV	0.980		0.980	
Grade adjustment factor,(note-1) fg	1.00		1.00	
Directional flow rate,(note-2) vi	212	pc/h	326	pc/h

Base percent time-spent-following,(note-4) BPTSFd	25.6	%
Adjustment for no-passing zones, fnp	36.3	
Percent time-spent-following, PTSFd	39.9	%

Level of Service and Other Performance Measures

Level of service, LOS	B	
Volume to capacity ratio, v/c	0.22	
Peak 15-min vehicle-miles of travel, VMT15	312	veh-mi
Peak-hour vehicle-miles of travel, VMT60	900	veh-mi
Peak 15-min total travel time, TT15	5.8	veh-h
Capacity from ATS, CdATS	1574	veh/h
Capacity from PTSF, CdPTSF	1667	veh/h
Directional Capacity	2619	veh/h

Passing Lane Analysis

Total length of analysis segment, Lt	6.0	mi
Length of two-lane highway upstream of the passing lane, Lu	-	mi
Length of passing lane including tapers, Lpl	-	mi
Average travel speed, ATSd (from above)	53.5	mi/h
Percent time-spent-following, PTSFd (from above)	39.9	
Level of service, LOSd (from above)	B	

Average Travel Speed with Passing Lane

Downstream length of two-lane highway within effective length of passing lane for average travel speed, Lde	-	mi
Length of two-lane highway downstream of effective length of the passing lane for average travel speed, Ld	-	mi
Adj. factor for the effect of passing lane on average speed, fpl	-	
Average travel speed including passing lane, ATSpl	-	

Percent Time-Spent-Following with Passing Lane

Downstream length of two-lane highway within effective length of passing lane for percent time-spent-following, Lde	-	mi
Length of two-lane highway downstream of effective length of the passing lane for percent time-spent-following, Ld	-	mi
Adj. factor for the effect of passing lane on percent time-spent-following, fpl	-	
Percent time-spent-following including passing lane, PTSFpl	-	%

Level of Service and Other Performance Measures with Passing Lane

Level of service including passing lane, LOSpl	-	
Peak 15-min total travel time, TT15	-	veh-h

Bicycle Level of Service

Posted speed limit, Sp	55
Percent of segment with occupied on-highway parking	0
Pavement rating, P	3
Flow rate in outside lane, vOL	208.3
Effective width of outside lane, We	37.50
Effective speed factor, St	4.79
Bicycle LOS Score, BLOS	5.58
Bicycle LOS	F

Notes:

1. Note that the adjustment factor for level terrain is 1.00, as level terrain is one of the base conditions. For the purpose of grade adjustment, specific dewngrade segments are treated as level terrain.
2. If vi (vd or vo) >= 1,700 pc/h, terminate analysis-the LOS is F.
3. For the analysis direction only and for v>200 veh/h.
4. For the analysis direction only.
5. Use alternative Exhibit 15-14 if some trucks operate at crawl speeds on a specific downgrade.

Phone: Fax:
E-Mail:

Directional Two-Lane Highway Segment Analysis

Analyst	ACS
Agency/Co.	Fehr and Peers
Date Performed	8/21/2014
Analysis Time Period	PM Peak Hour
Highway	SR-138
From/To	190th St to 130th St
Jurisdiction	CALTRANS
Analysis Year	2020 NB
Description	STATE ROUTE 138 HCS ANALYSIS

Input Data

Highway class	Class 1		Peak hour factor, PHF	0.89	
Shoulder width	10.0	ft	% Trucks and buses	20	%
Lane width	12.0	ft	% Trucks crawling	0.0	%
Segment length	6.0	mi	Truck crawl speed	0.0	mi/hr
Terrain type	Level		% Recreational vehicles	20	%
Grade: Length	-	mi	% No-passing zones	20	%
Up/down	-	%	Access point density	2	/mi

Analysis direction volume, Vd 310 veh/h
Opposing direction volume, Vo 240 veh/h

Average Travel Speed

Direction	Analysis(d)		Opposing (o)	
PCE for trucks, ET	1.4		1.4	
PCE for RVs, ER	1.0		1.0	
Heavy-vehicle adj. factor,(note-5) fHV	0.926		0.926	
Grade adj. factor,(note-1) fg	1.00		1.00	
Directional flow rate,(note-2) vi	376	pc/h	291	pc/h

Free-Flow Speed from Field Measurement:		
Field measured speed,(note-3) S FM	-	mi/h
Observed total demand,(note-3) V	-	veh/h
Estimated Free-Flow Speed:		
Base free-flow speed,(note-3) BFFS	60.0	mi/h
Adj. for lane and shoulder width,(note-3) fLS	0.0	mi/h
Adj. for access point density,(note-3) fA	0.5	mi/h
Free-flow speed, FFSd	59.5	mi/h
Adjustment for no-passing zones, fnp	1.6	mi/h
Average travel speed, ATSd	52.7	mi/h
Percent Free Flow Speed, PFFS	88.5	%

Percent Time-Spent-Following

Direction	Analysis(d)		Opposing (o)	
PCE for trucks, ET	1.1		1.1	
PCE for RVs, ER	1.0		1.0	
Heavy-vehicle adjustment factor, fHV	0.980		0.980	
Grade adjustment factor,(note-1) fg	1.00		1.00	
Directional flow rate,(note-2) vi	355	pc/h	275	pc/h
Base percent time-spent-following,(note-4) BPTSFd	36.9	%		
Adjustment for no-passing zones, fnp	36.3			
Percent time-spent-following, PTSFd	57.4	%		

Level of Service and Other Performance Measures

Level of service, LOS	C	
Volume to capacity ratio, v/c	0.24	
Peak 15-min vehicle-miles of travel, VMT15	522	veh-mi
Peak-hour vehicle-miles of travel, VMT60	1860	veh-mi
Peak 15-min total travel time, TT15	9.9	veh-h
Capacity from ATS, CdATS	1574	veh/h
Capacity from PTSF, CdPTSF	1667	veh/h
Directional Capacity	2792	veh/h

Passing Lane Analysis

Total length of analysis segment, Lt	6.0	mi
Length of two-lane highway upstream of the passing lane, Lu	-	mi
Length of passing lane including tapers, Lpl	-	mi
Average travel speed, ATSd (from above)	52.7	mi/h
Percent time-spent-following, PTSFd (from above)	57.4	
Level of service, LOSd (from above)	C	

Average Travel Speed with Passing Lane

Downstream length of two-lane highway within effective length of passing lane for average travel speed, Lde	-	mi
Length of two-lane highway downstream of effective length of the passing lane for average travel speed, Ld	-	mi
Adj. factor for the effect of passing lane on average speed, fpl	-	
Average travel speed including passing lane, ATSpl	-	

Percent Time-Spent-Following with Passing Lane

Downstream length of two-lane highway within effective length of passing lane for percent time-spent-following, Lde	-	mi
Length of two-lane highway downstream of effective length of the passing lane for percent time-spent-following, Ld	-	mi
Adj. factor for the effect of passing lane on percent time-spent-following, fpl	-	
Percent time-spent-following including passing lane, PTSFpl	-	%

Level of Service and Other Performance Measures with Passing Lane

Level of service including passing lane, LOSpl	-	
Peak 15-min total travel time, TT15	-	veh-h

Bicycle Level of Service

Posted speed limit, Sp	55
Percent of segment with occupied on-highway parking	0
Pavement rating, P	3
Flow rate in outside lane, vOL	348.3
Effective width of outside lane, We	32.00
Effective speed factor, St	4.79
Bicycle LOS Score, BLOS	7.75
Bicycle LOS	F

Notes:

1. Note that the adjustment factor for level terrain is 1.00, as level terrain is one of the base conditions. For the purpose of grade adjustment, specific dewngrade segments are treated as level terrain.
2. If vi (vd or vo) >= 1,700 pc/h, terminate analysis-the LOS is F.
3. For the analysis direction only and for v>200 veh/h.
4. For the analysis direction only.
5. Use alternative Exhibit 15-14 if some trucks operate at crawl speeds on a specific downgrade.

Phone: Fax:
E-Mail:

Directional Two-Lane Highway Segment Analysis

Analyst	ACS
Agency/Co.	Fehr and Peers
Date Performed	8/21/2014
Analysis Time Period	AM Peak Hour
Highway	SR-138
From/To	130th St to 80th St
Jurisdiction	CALTRANS
Analysis Year	2020 NB
Description	STATE ROUTE 138 HCS ANALYSIS

Input Data

Highway class	Class 1		Peak hour factor, PHF	0.85	
Shoulder width	10.0	ft	% Trucks and buses	20	%
Lane width	12.0	ft	% Trucks crawling	0.0	%
Segment length	5.0	mi	Truck crawl speed	0.0	mi/hr
Terrain type	Level		% Recreational vehicles	20	%
Grade: Length	-	mi	% No-passing zones	20	%
Up/down	-	%	Access point density	3	/mi

Analysis direction volume, Vd 220 veh/h
Opposing direction volume, Vo 250 veh/h

Average Travel Speed

Direction	Analysis(d)		Opposing (o)	
PCE for trucks, ET	1.4		1.4	
PCE for RVs, ER	1.0		1.0	
Heavy-vehicle adj. factor,(note-5) fHV	0.926		0.926	
Grade adj. factor,(note-1) fg	1.00		1.00	
Directional flow rate,(note-2) vi	280	pc/h	318	pc/h

Free-Flow Speed from Field Measurement:		
Field measured speed,(note-3) S FM	-	mi/h
Observed total demand,(note-3) V	-	veh/h
Estimated Free-Flow Speed:		
Base free-flow speed,(note-3) BFFS	60.0	mi/h
Adj. for lane and shoulder width,(note-3) fLS	0.0	mi/h
Adj. for access point density,(note-3) fA	0.8	mi/h
Free-flow speed, FFSd	59.3	mi/h
Adjustment for no-passing zones, fnp	1.6	mi/h
Average travel speed, ATSd	53.0	mi/h
Percent Free Flow Speed, PFFS	89.5	%

Percent Time-Spent-Following

Direction	Analysis(d)		Opposing (o)	
PCE for trucks, ET	1.1		1.1	
PCE for RVs, ER	1.0		1.0	
Heavy-vehicle adjustment factor, fHV	0.980		0.980	
Grade adjustment factor,(note-1) fg	1.00		1.00	
Directional flow rate,(note-2) vi	264	pc/h	300	pc/h
Base percent time-spent-following,(note-4) BPTSFd	29.9	%		
Adjustment for no-passing zones, fnp	38.1			
Percent time-spent-following, PTSFd	47.7	%		

Level of Service and Other Performance Measures

Level of service, LOS	B	
Volume to capacity ratio, v/c	0.20	
Peak 15-min vehicle-miles of travel, VMT15	324	veh-mi
Peak-hour vehicle-miles of travel, VMT60	1100	veh-mi
Peak 15-min total travel time, TT15	6.1	veh-h
Capacity from ATS, CdATS	1574	veh/h
Capacity from PTSF, CdPTSF	1667	veh/h
Directional Capacity	2960	veh/h

Passing Lane Analysis

Total length of analysis segment, Lt	5.0	mi
Length of two-lane highway upstream of the passing lane, Lu	-	mi
Length of passing lane including tapers, Lpl	-	mi
Average travel speed, ATSd (from above)	53.0	mi/h
Percent time-spent-following, PTSFd (from above)	47.7	
Level of service, LOSd (from above)	B	

Average Travel Speed with Passing Lane

Downstream length of two-lane highway within effective length of passing lane for average travel speed, Lde	-	mi
Length of two-lane highway downstream of effective length of the passing lane for average travel speed, Ld	-	mi
Adj. factor for the effect of passing lane on average speed, fpl	-	
Average travel speed including passing lane, ATSpl	-	

Percent Time-Spent-Following with Passing Lane

Downstream length of two-lane highway within effective length of passing lane for percent time-spent-following, Lde	-	mi
Length of two-lane highway downstream of effective length of the passing lane for percent time-spent-following, Ld	-	mi
Adj. factor for the effect of passing lane on percent time-spent-following, fpl	-	
Percent time-spent-following including passing lane, PTSFpl	-	%

Level of Service and Other Performance Measures with Passing Lane

Level of service including passing lane, LOSpl	-	
Peak 15-min total travel time, TT15	-	veh-h

Bicycle Level of Service

Posted speed limit, Sp	55
Percent of segment with occupied on-highway parking	0
Pavement rating, P	3
Flow rate in outside lane, vOL	258.8
Effective width of outside lane, We	32.00
Effective speed factor, St	4.79
Bicycle LOS Score, BLOS	7.60
Bicycle LOS	F

Notes:

1. Note that the adjustment factor for level terrain is 1.00, as level terrain is one of the base conditions. For the purpose of grade adjustment, specific dewngrade segments are treated as level terrain.
2. If vi (vd or vo) >= 1,700 pc/h, terminate analysis-the LOS is F.
3. For the analysis direction only and for v>200 veh/h.
4. For the analysis direction only.
5. Use alternative Exhibit 15-14 if some trucks operate at crawl speeds on a specific downgrade.

Phone: Fax:
E-Mail:

Directional Two-Lane Highway Segment Analysis

Analyst	ACS
Agency/Co.	Fehr and Peers
Date Performed	8/21/2014
Analysis Time Period	PM Peak Hour
Highway	SR-138
From/To	130th St to 80th St
Jurisdiction	CALTRANS
Analysis Year	2020 NB
Description	STATE ROUTE 138 HCS ANALYSIS

Input Data

Highway class	Class 1		Peak hour factor, PHF	0.91	
Shoulder width	10.0	ft	% Trucks and buses	20	%
Lane width	12.0	ft	% Trucks crawling	0.0	%
Segment length	5.0	mi	Truck crawl speed	0.0	mi/hr
Terrain type	Level		% Recreational vehicles	20	%
Grade: Length	-	mi	% No-passing zones	20	%
Up/down	-	%	Access point density	3	/mi

Analysis direction volume, Vd 330 veh/h
Opposing direction volume, Vo 270 veh/h

Average Travel Speed

Direction	Analysis(d)		Opposing (o)	
PCE for trucks, ET	1.3		1.4	
PCE for RVs, ER	1.0		1.0	
Heavy-vehicle adj. factor,(note-5) fHV	0.943		0.926	
Grade adj. factor,(note-1) fg	1.00		1.00	
Directional flow rate,(note-2) vi	385	pc/h	320	pc/h

Free-Flow Speed from Field Measurement:		
Field measured speed,(note-3) S FM	-	mi/h
Observed total demand,(note-3) V	-	veh/h
Estimated Free-Flow Speed:		
Base free-flow speed,(note-3) BFFS	60.0	mi/h
Adj. for lane and shoulder width,(note-3) fLS	0.0	mi/h
Adj. for access point density,(note-3) fA	0.8	mi/h
Free-flow speed, FFSd	59.3	mi/h
Adjustment for no-passing zones, fnp	1.6	mi/h
Average travel speed, ATSd	52.2	mi/h
Percent Free Flow Speed, PFFS	88.1	%

Percent Time-Spent-Following

Direction	Analysis(d)		Opposing (o)	
PCE for trucks, ET	1.1		1.1	
PCE for RVs, ER	1.0		1.0	
Heavy-vehicle adjustment factor, fHV	0.980		0.980	
Grade adjustment factor,(note-1) fg	1.00		1.00	
Directional flow rate,(note-2) vi	370	pc/h	303	pc/h
Base percent time-spent-following,(note-4) BPTSFd	38.5	%		
Adjustment for no-passing zones, fnp	35.2			
Percent time-spent-following, PTSFd	57.9	%		

Level of Service and Other Performance Measures

Level of service, LOS	C	
Volume to capacity ratio, v/c	0.24	
Peak 15-min vehicle-miles of travel, VMT15	453	veh-mi
Peak-hour vehicle-miles of travel, VMT60	1650	veh-mi
Peak 15-min total travel time, TT15	8.7	veh-h
Capacity from ATS, CdATS	1574	veh/h
Capacity from PTSF, CdPTSF	1667	veh/h
Directional Capacity	2882	veh/h

Passing Lane Analysis

Total length of analysis segment, Lt	5.0	mi
Length of two-lane highway upstream of the passing lane, Lu	-	mi
Length of passing lane including tapers, Lpl	-	mi
Average travel speed, ATSd (from above)	52.2	mi/h
Percent time-spent-following, PTSFd (from above)	57.9	
Level of service, LOSd (from above)	C	

Average Travel Speed with Passing Lane

Downstream length of two-lane highway within effective length of passing lane for average travel speed, Lde	-	mi
Length of two-lane highway downstream of effective length of the passing lane for average travel speed, Ld	-	mi
Adj. factor for the effect of passing lane on average speed, fpl	-	
Average travel speed including passing lane, ATSpl	-	

Percent Time-Spent-Following with Passing Lane

Downstream length of two-lane highway within effective length of passing lane for percent time-spent-following, Lde	-	mi
Length of two-lane highway downstream of effective length of the passing lane for percent time-spent-following, Ld	-	mi
Adj. factor for the effect of passing lane on percent time-spent-following, fpl	-	
Percent time-spent-following including passing lane, PTSFpl	-	%

Level of Service and Other Performance Measures with Passing Lane

Level of service including passing lane, LOSpl	-	
Peak 15-min total travel time, TT15	-	veh-h

Bicycle Level of Service

Posted speed limit, Sp	55
Percent of segment with occupied on-highway parking	0
Pavement rating, P	3
Flow rate in outside lane, vOL	362.6
Effective width of outside lane, We	32.00
Effective speed factor, St	4.79
Bicycle LOS Score, BLOS	7.77
Bicycle LOS	F

Notes:

1. Note that the adjustment factor for level terrain is 1.00, as level terrain is one of the base conditions. For the purpose of grade adjustment, specific dewngrade segments are treated as level terrain.
2. If vi (vd or vo) >= 1,700 pc/h, terminate analysis-the LOS is F.
3. For the analysis direction only and for v>200 veh/h.
4. For the analysis direction only.
5. Use alternative Exhibit 15-14 if some trucks operate at crawl speeds on a specific downgrade.

Phone: Fax:
E-Mail:

Directional Two-Lane Highway Segment Analysis

Analyst	ACS
Agency/Co.	Fehr and Peers
Date Performed	8/21/2014
Analysis Time Period	AM Peak Hour
Highway	SR-138
From/To	80th St to 30th St
Jurisdiction	CALTRANS
Analysis Year	2020 NB
Description	STATE ROUTE 138 HCS ANALYSIS

Input Data

Highway class	Class 1		Peak hour factor, PHF	0.94	
Shoulder width	10.0	ft	% Trucks and buses	20	%
Lane width	12.0	ft	% Trucks crawling	0.0	%
Segment length	5.0	mi	Truck crawl speed	0.0	mi/hr
Terrain type	Level		% Recreational vehicles	20	%
Grade: Length	-	mi	% No-passing zones	20	%
Up/down	-	%	Access point density	3	/mi

Analysis direction volume, Vd 260 veh/h
Opposing direction volume, Vo 230 veh/h

Average Travel Speed

Direction	Analysis(d)		Opposing (o)	
PCE for trucks, ET	1.4		1.5	
PCE for RVs, ER	1.0		1.0	
Heavy-vehicle adj. factor,(note-5) fHV	0.926		0.909	
Grade adj. factor,(note-1) fg	1.00		1.00	
Directional flow rate,(note-2) vi	299	pc/h	269	pc/h

Free-Flow Speed from Field Measurement:		
Field measured speed,(note-3) S FM	-	mi/h
Observed total demand,(note-3) V	-	veh/h
Estimated Free-Flow Speed:		
Base free-flow speed,(note-3) BFFS	60.0	mi/h
Adj. for lane and shoulder width,(note-3) fLS	0.0	mi/h
Adj. for access point density,(note-3) fA	0.8	mi/h
Free-flow speed, FFSd	59.3	mi/h
Adjustment for no-passing zones, fnp	1.7	mi/h
Average travel speed, ATSd	53.2	mi/h
Percent Free Flow Speed, PFFS	89.7	%

Percent Time-Spent-Following

Direction	Analysis(d)	Opposing (o)
PCE for trucks, ET	1.1	1.1
PCE for RVs, ER	1.0	1.0
Heavy-vehicle adjustment factor, fHV	0.980	0.980
Grade adjustment factor,(note-1) fg	1.00	1.00
Directional flow rate,(note-2) vi	282 pc/h	250 pc/h

Base percent time-spent-following,(note-4) BPTSFd	30.4	%
Adjustment for no-passing zones, fnp	38.4	
Percent time-spent-following, PTSFd	50.8	%

Level of Service and Other Performance Measures

Level of service, LOS	C	
Volume to capacity ratio, v/c	0.19	
Peak 15-min vehicle-miles of travel, VMT15	346	veh-mi
Peak-hour vehicle-miles of travel, VMT60	1300	veh-mi
Peak 15-min total travel time, TT15	6.5	veh-h
Capacity from ATS, CdATS	1574	veh/h
Capacity from PTSF, CdPTSF	1667	veh/h
Directional Capacity	2990	veh/h

Passing Lane Analysis

Total length of analysis segment, Lt	5.0	mi
Length of two-lane highway upstream of the passing lane, Lu	-	mi
Length of passing lane including tapers, Lpl	-	mi
Average travel speed, ATSd (from above)	53.2	mi/h
Percent time-spent-following, PTSFd (from above)	50.8	
Level of service, LOSd (from above)	C	

Average Travel Speed with Passing Lane

Downstream length of two-lane highway within effective length of passing lane for average travel speed, Lde	-	mi
Length of two-lane highway downstream of effective length of the passing lane for average travel speed, Ld	-	mi
Adj. factor for the effect of passing lane on average speed, fpl	-	
Average travel speed including passing lane, ATSpl	-	

Percent Time-Spent-Following with Passing Lane

Downstream length of two-lane highway within effective length of passing lane for percent time-spent-following, Lde	-	mi
Length of two-lane highway downstream of effective length of the passing lane for percent time-spent-following, Ld	-	mi
Adj. factor for the effect of passing lane on percent time-spent-following, fpl	-	
Percent time-spent-following including passing lane, PTSFpl	-	%

Level of Service and Other Performance Measures with Passing Lane

Level of service including passing lane, LOSpl	-	
Peak 15-min total travel time, TT15	-	veh-h

Bicycle Level of Service

Posted speed limit, Sp	55
Percent of segment with occupied on-highway parking	0
Pavement rating, P	3
Flow rate in outside lane, vOL	276.6
Effective width of outside lane, We	32.00
Effective speed factor, St	4.79
Bicycle LOS Score, BLOS	7.64
Bicycle LOS	F

Notes:

1. Note that the adjustment factor for level terrain is 1.00, as level terrain is one of the base conditions. For the purpose of grade adjustment, specific dewngrade segments are treated as level terrain.
2. If vi (vd or vo) >= 1,700 pc/h, terminate analysis-the LOS is F.
3. For the analysis direction only and for v>200 veh/h.
4. For the analysis direction only.
5. Use alternative Exhibit 15-14 if some trucks operate at crawl speeds on a specific downgrade.

Phone: Fax:
E-Mail:

Directional Two-Lane Highway Segment Analysis

Analyst	ACS
Agency/Co.	Fehr and Peers
Date Performed	8/21/2014
Analysis Time Period	PM Peak Hour
Highway	SR-138
From/To	80th St to 30th St
Jurisdiction	CALTRANS
Analysis Year	2020 NB
Description	STATE ROUTE 138 HCS ANALYSIS

Input Data

Highway class	Class 1		Peak hour factor, PHF	0.94	
Shoulder width	10.0	ft	% Trucks and buses	20	%
Lane width	12.0	ft	% Trucks crawling	0.0	%
Segment length	5.0	mi	Truck crawl speed	0.0	mi/hr
Terrain type	Level		% Recreational vehicles	20	%
Grade: Length	-	mi	% No-passing zones	20	%
Up/down	-	%	Access point density	3	/mi

Analysis direction volume, Vd 350 veh/h
Opposing direction volume, Vo 300 veh/h

Average Travel Speed

Direction	Analysis(d)		Opposing (o)	
PCE for trucks, ET	1.3		1.4	
PCE for RVs, ER	1.0		1.0	
Heavy-vehicle adj. factor,(note-5) fHV	0.943		0.926	
Grade adj. factor,(note-1) fg	1.00		1.00	
Directional flow rate,(note-2) vi	395	pc/h	345	pc/h

Free-Flow Speed from Field Measurement:		
Field measured speed,(note-3) S FM	-	mi/h
Observed total demand,(note-3) V	-	veh/h
Estimated Free-Flow Speed:		
Base free-flow speed,(note-3) BFFS	60.0	mi/h
Adj. for lane and shoulder width,(note-3) fLS	0.0	mi/h
Adj. for access point density,(note-3) fA	0.8	mi/h
Free-flow speed, FFSd	59.3	mi/h
Adjustment for no-passing zones, fnp	1.5	mi/h
Average travel speed, ATSd	52.0	mi/h
Percent Free Flow Speed, PFFS	87.8	%

Percent Time-Spent-Following

Direction	Analysis(d)		Opposing (o)	
PCE for trucks, ET	1.1		1.1	
PCE for RVs, ER	1.0		1.0	
Heavy-vehicle adjustment factor, fHV	0.980		0.980	
Grade adjustment factor,(note-1) fg	1.00		1.00	
Directional flow rate,(note-2) vi	380	pc/h	326	pc/h

Base percent time-spent-following,(note-4) BPTSFd	40.0	%
Adjustment for no-passing zones, fnp	34.5	
Percent time-spent-following, PTSFd	58.6	%

Level of Service and Other Performance Measures

Level of service, LOS	C	
Volume to capacity ratio, v/c	0.25	
Peak 15-min vehicle-miles of travel, VMT15	465	veh-mi
Peak-hour vehicle-miles of travel, VMT60	1750	veh-mi
Peak 15-min total travel time, TT15	8.9	veh-h
Capacity from ATS, CdATS	1574	veh/h
Capacity from PTSF, CdPTSF	1667	veh/h
Directional Capacity	2949	veh/h

Passing Lane Analysis

Total length of analysis segment, Lt	5.0	mi
Length of two-lane highway upstream of the passing lane, Lu	-	mi
Length of passing lane including tapers, Lpl	-	mi
Average travel speed, ATSd (from above)	52.0	mi/h
Percent time-spent-following, PTSFd (from above)	58.6	
Level of service, LOSd (from above)	C	

Average Travel Speed with Passing Lane

Downstream length of two-lane highway within effective length of passing lane for average travel speed, Lde	-	mi
Length of two-lane highway downstream of effective length of the passing lane for average travel speed, Ld	-	mi
Adj. factor for the effect of passing lane on average speed, fpl	-	
Average travel speed including passing lane, ATSpl	-	

Percent Time-Spent-Following with Passing Lane

Downstream length of two-lane highway within effective length of passing lane for percent time-spent-following, Lde	-	mi
Length of two-lane highway downstream of effective length of the passing lane for percent time-spent-following, Ld	-	mi
Adj. factor for the effect of passing lane on percent time-spent-following, fpl	-	
Percent time-spent-following including passing lane, PTSFpl	-	%

Level of Service and Other Performance Measures with Passing Lane

Level of service including passing lane, LOSpl	-	
Peak 15-min total travel time, TT15	-	veh-h

Bicycle Level of Service

Posted speed limit, Sp	55
Percent of segment with occupied on-highway parking	0
Pavement rating, P	3
Flow rate in outside lane, vOL	372.3
Effective width of outside lane, We	32.00
Effective speed factor, St	4.79
Bicycle LOS Score, BLOS	7.79
Bicycle LOS	F

Notes:

1. Note that the adjustment factor for level terrain is 1.00, as level terrain is one of the base conditions. For the purpose of grade adjustment, specific dewngrade segments are treated as level terrain.
2. If vi (vd or vo) >= 1,700 pc/h, terminate analysis-the LOS is F.
3. For the analysis direction only and for v>200 veh/h.
4. For the analysis direction only.
5. Use alternative Exhibit 15-14 if some trucks operate at crawl speeds on a specific downgrade.

Phone: Fax:
E-Mail:

Directional Two-Lane Highway Segment Analysis

Analyst	ACS
Agency/Co.	Fehr and Peers
Date Performed	8/21/2014
Analysis Time Period	AM Peak Hour
Highway	SR-138
From/To	30th St to Route 14
Jurisdiction	CALTRANS
Analysis Year	2020 NB
Description	STATE ROUTE 138 HCS ANALYSIS

Input Data

Highway class	Class 1		Peak hour factor, PHF	0.89	
Shoulder width	10.0	ft	% Trucks and buses	20	%
Lane width	12.0	ft	% Trucks crawling	0.0	%
Segment length	0.7	mi	Truck crawl speed	0.0	mi/hr
Terrain type	Level		% Recreational vehicles	20	%
Grade: Length	-	mi	% No-passing zones	20	%
Up/down	-	%	Access point density	1	/mi

Analysis direction volume, Vd 100 veh/h
Opposing direction volume, Vo 70 veh/h

Average Travel Speed

Direction	Analysis(d)		Opposing (o)	
PCE for trucks, ET	1.9		1.9	
PCE for RVs, ER	1.0		1.0	
Heavy-vehicle adj. factor,(note-5) fHV	0.847		0.847	
Grade adj. factor,(note-1) fg	1.00		1.00	
Directional flow rate,(note-2) vi	133	pc/h	93	pc/h

Free-Flow Speed from Field Measurement:		
Field measured speed,(note-3) S FM	-	mi/h
Observed total demand,(note-3) V	-	veh/h
Estimated Free-Flow Speed:		
Base free-flow speed,(note-3) BFFS	60.0	mi/h
Adj. for lane and shoulder width,(note-3) fLS	0.0	mi/h
Adj. for access point density,(note-3) fA	0.3	mi/h
Free-flow speed, FFSd	59.8	mi/h
Adjustment for no-passing zones, fnp	0.7	mi/h
Average travel speed, ATSd	57.3	mi/h
Percent Free Flow Speed, PFFS	95.9	%

Percent Time-Spent-Following

Direction	Analysis(d)	Opposing (o)
PCE for trucks, ET	1.1	1.1
PCE for RVs, ER	1.0	1.0
Heavy-vehicle adjustment factor, fHV	0.980	0.980
Grade adjustment factor,(note-1) fg	1.00	1.00
Directional flow rate,(note-2) vi	115 pc/h	80 pc/h

Base percent time-spent-following,(note-4) BPTSFd	13.2	%
Adjustment for no-passing zones, fnp	30.4	
Percent time-spent-following, PTSFd	31.1	%

Level of Service and Other Performance Measures

Level of service, LOS	A	
Volume to capacity ratio, v/c	0.09	
Peak 15-min vehicle-miles of travel, VMT15	20	veh-mi
Peak-hour vehicle-miles of travel, VMT60	70	veh-mi
Peak 15-min total travel time, TT15	0.3	veh-h
Capacity from ATS, CdATS	1440	veh/h
Capacity from PTSF, CdPTSF	1667	veh/h
Directional Capacity	2446	veh/h

Passing Lane Analysis

Total length of analysis segment, Lt	0.7	mi
Length of two-lane highway upstream of the passing lane, Lu	-	mi
Length of passing lane including tapers, Lpl	-	mi
Average travel speed, ATSd (from above)	57.3	mi/h
Percent time-spent-following, PTSFd (from above)	31.1	
Level of service, LOSd (from above)	A	

Average Travel Speed with Passing Lane

Downstream length of two-lane highway within effective length of passing lane for average travel speed, Lde	-	mi
Length of two-lane highway downstream of effective length of the passing lane for average travel speed, Ld	-	mi
Adj. factor for the effect of passing lane on average speed, fpl	-	
Average travel speed including passing lane, ATSpl	-	

Percent Time-Spent-Following with Passing Lane

Downstream length of two-lane highway within effective length of passing lane for percent time-spent-following, Lde	-	mi
Length of two-lane highway downstream of effective length of the passing lane for percent time-spent-following, Ld	-	mi
Adj. factor for the effect of passing lane on percent time-spent-following, fpl	-	
Percent time-spent-following including passing lane, PTSFpl	-	%

Level of Service and Other Performance Measures with Passing Lane

Level of service including passing lane, LOSpl	-	
Peak 15-min total travel time, TT15	-	veh-h

Bicycle Level of Service

Posted speed limit, Sp	55
Percent of segment with occupied on-highway parking	0
Pavement rating, P	3
Flow rate in outside lane, vOL	112.4
Effective width of outside lane, We	43.00
Effective speed factor, St	4.79
Bicycle LOS Score, BLOS	3.05
Bicycle LOS	C

Notes:

1. Note that the adjustment factor for level terrain is 1.00, as level terrain is one of the base conditions. For the purpose of grade adjustment, specific dewngrade segments are treated as level terrain.
2. If vi (vd or vo) >= 1,700 pc/h, terminate analysis-the LOS is F.
3. For the analysis direction only and for v>200 veh/h.
4. For the analysis direction only.
5. Use alternative Exhibit 15-14 if some trucks operate at crawl speeds on a specific downgrade.

Phone: Fax:
E-Mail:

Directional Two-Lane Highway Segment Analysis

Analyst	ACS
Agency/Co.	Fehr and Peers
Date Performed	8/21/2014
Analysis Time Period	PM Peak Hour
Highway	SR-138
From/To	30th St to Route 14
Jurisdiction	CALTRANS
Analysis Year	2020 NB
Description	STATE ROUTE 138 HCS ANALYSIS

Input Data

Highway class	Class 1		Peak hour factor, PHF	0.94	
Shoulder width	10.0	ft	% Trucks and buses	20	%
Lane width	12.0	ft	% Trucks crawling	0.0	%
Segment length	0.7	mi	Truck crawl speed	0.0	mi/hr
Terrain type	Level		% Recreational vehicles	20	%
Grade: Length	-	mi	% No-passing zones	20	%
Up/down	-	%	Access point density	1	/mi

Analysis direction volume, Vd 160 veh/h
Opposing direction volume, Vo 80 veh/h

Average Travel Speed

Direction	Analysis(d)		Opposing (o)	
PCE for trucks, ET	1.6		1.9	
PCE for RVs, ER	1.0		1.0	
Heavy-vehicle adj. factor,(note-5) fHV	0.893		0.847	
Grade adj. factor,(note-1) fg	1.00		1.00	
Directional flow rate,(note-2) vi	191	pc/h	100	pc/h

Free-Flow Speed from Field Measurement:		
Field measured speed,(note-3) S FM	-	mi/h
Observed total demand,(note-3) V	-	veh/h
Estimated Free-Flow Speed:		
Base free-flow speed,(note-3) BFFS	60.0	mi/h
Adj. for lane and shoulder width,(note-3) fLS	0.0	mi/h
Adj. for access point density,(note-3) fA	0.3	mi/h
Free-flow speed, FFSd	59.8	mi/h
Adjustment for no-passing zones, fnp	0.7	mi/h
Average travel speed, ATSd	56.8	mi/h
Percent Free Flow Speed, PFFS	95.1	%

Percent Time-Spent-Following

Direction	Analysis(d)		Opposing (o)	
PCE for trucks, ET	1.1		1.1	
PCE for RVs, ER	1.0		1.0	
Heavy-vehicle adjustment factor, fHV	0.980		0.980	
Grade adjustment factor,(note-1) fg	1.00		1.00	
Directional flow rate,(note-2) vi	174	pc/h	87	pc/h
Base percent time-spent-following,(note-4) BPTSFd	19.1	%		
Adjustment for no-passing zones, fnp	29.9			
Percent time-spent-following, PTSFd	39.0	%		

Level of Service and Other Performance Measures

Level of service, LOS	B	
Volume to capacity ratio, v/c	0.13	
Peak 15-min vehicle-miles of travel, VMT15	30	veh-mi
Peak-hour vehicle-miles of travel, VMT60	112	veh-mi
Peak 15-min total travel time, TT15	0.5	veh-h
Capacity from ATS, CdATS	1440	veh/h
Capacity from PTSF, CdPTSF	1667	veh/h
Directional Capacity	2193	veh/h

Passing Lane Analysis

Total length of analysis segment, Lt	0.7	mi
Length of two-lane highway upstream of the passing lane, Lu	-	mi
Length of passing lane including tapers, Lpl	-	mi
Average travel speed, ATSd (from above)	56.8	mi/h
Percent time-spent-following, PTSFd (from above)	39.0	
Level of service, LOSd (from above)	B	

Average Travel Speed with Passing Lane

Downstream length of two-lane highway within effective length of passing lane for average travel speed, Lde	-	mi
Length of two-lane highway downstream of effective length of the passing lane for average travel speed, Ld	-	mi
Adj. factor for the effect of passing lane on average speed, fpl	-	
Average travel speed including passing lane, ATSpl	-	

Percent Time-Spent-Following with Passing Lane

Downstream length of two-lane highway within effective length of passing lane for percent time-spent-following, Lde	-	mi
Length of two-lane highway downstream of effective length of the passing lane for percent time-spent-following, Ld	-	mi
Adj. factor for the effect of passing lane on percent time-spent-following, fpl	-	
Percent time-spent-following including passing lane, PTSFpl	-	%

Level of Service and Other Performance Measures with Passing Lane

Level of service including passing lane, LOSpl	-	
Peak 15-min total travel time, TT15	-	veh-h

Bicycle Level of Service

Posted speed limit, Sp	55
Percent of segment with occupied on-highway parking	0
Pavement rating, P	3
Flow rate in outside lane, vOL	170.2
Effective width of outside lane, We	36.40
Effective speed factor, St	4.79
Bicycle LOS Score, BLOS	5.88
Bicycle LOS	F

Notes:

1. Note that the adjustment factor for level terrain is 1.00, as level terrain is one of the base conditions. For the purpose of grade adjustment, specific dewngrade segments are treated as level terrain.
2. If vi (vd or vo) >= 1,700 pc/h, terminate analysis-the LOS is F.
3. For the analysis direction only and for v>200 veh/h.
4. For the analysis direction only.
5. Use alternative Exhibit 15-14 if some trucks operate at crawl speeds on a specific downgrade.

Phone: Fax:
E-mail:

Operational Analysis

Analyst:	ACS
Agency or Company:	Fehr and Peers
Date Performed:	8/21/2014
Analysis Time Period:	AM Peak Hour
Freeway/Direction:	STATE ROUTE 138-EB
From/To:	I-5 Connector to 1-Gorman Post
Jurisdiction:	CAltrans
Analysis Year:	2025 Alt 1
Description:	STATE ROUTE 138 HCS ANALYSIS

Flow Inputs and Adjustments

Volume, V	950	veh/h
Peak-hour factor, PHF	0.87	
Peak 15-min volume, v15	273	v
Trucks and buses	10	%
Recreational vehicles	0	%
Terrain type:	Level	
Grade	-	%
Segment length	-	mi
Trucks and buses PCE, ET	1.5*	
Recreational vehicle PCE, ER	1.2	
Heavy vehicle adjustment, fHV	0.952	
Driver population factor, fp	1.00	
Flow rate, vp	382	pc/h/ln

Speed Inputs and Adjustments

Lane width	-	ft
Right-side lateral clearance	-	ft
Total ramp density, TRD	-	ramps/mi
Number of lanes, N	3	
Free-flow speed:	Measured	
FFS or BFFS	70.0	mi/h
Lane width adjustment, fLW	-	mi/h
Lateral clearance adjustment, fLC	-	mi/h
TRD adjustment	-	mi/h
Free-flow speed, FFS	70.0	mi/h

LOS and Performance Measures

Flow rate, vp	382	pc/h/ln
Free-flow speed, FFS	70.0	mi/h
Average passenger-car speed, S	70.0	mi/h
Number of lanes, N	3	
Density, D	5.5	pc/mi/ln
Level of service, LOS	A	

Overall results are not computed when free-flow speed is less than 55 mph.

Phone: Fax:
E-mail:

Operational Analysis

Analyst:	ACS
Agency or Company:	Fehr and Peers
Date Performed:	8/21/2014
Analysis Time Period:	PM Peak Hour
Freeway/Direction:	STATE ROUTE 138-EB
From/To:	I-5 Connector to 1-Gorman Post
Jurisdiction:	CAltrans
Analysis Year:	2025 Alt 1
Description:	STATE ROUTE 138 HCS ANALYSIS

Flow Inputs and Adjustments

Volume, V	1640	veh/h
Peak-hour factor, PHF	0.86	
Peak 15-min volume, v15	477	v
Trucks and buses	10	%
Recreational vehicles	0	%
Terrain type:	Level	
Grade	-	%
Segment length	-	mi
Trucks and buses PCE, ET	1.5*	
Recreational vehicle PCE, ER	1.2	
Heavy vehicle adjustment, fHV	0.952	
Driver population factor, fp	1.00	
Flow rate, vp	667	pc/h/ln

Speed Inputs and Adjustments

Lane width	-	ft
Right-side lateral clearance	-	ft
Total ramp density, TRD	-	ramps/mi
Number of lanes, N	3	
Free-flow speed:	Measured	
FFS or BFFS	70.0	mi/h
Lane width adjustment, fLW	-	mi/h
Lateral clearance adjustment, fLC	-	mi/h
TRD adjustment	-	mi/h
Free-flow speed, FFS	70.0	mi/h

LOS and Performance Measures

Flow rate, vp	667	pc/h/ln
Free-flow speed, FFS	70.0	mi/h
Average passenger-car speed, S	70.0	mi/h
Number of lanes, N	3	
Density, D	9.5	pc/mi/ln
Level of service, LOS	A	

Overall results are not computed when free-flow speed is less than 55 mph.

Phone: Fax:
E-mail:

Operational Analysis

Analyst:	ACS
Agency or Company:	Fehr and Peers
Date Performed:	8/21/2014
Analysis Time Period:	AM Peak Hour
Freeway/Direction:	STATE ROUTE 138-WB
From/To:	I-5 Connector to 1-Gorman Post
Jurisdiction:	CAltrans
Analysis Year:	2025 Alt 1
Description:	STATE ROUTE 138 HCS ANALYSIS

Flow Inputs and Adjustments

Volume, V	1690	veh/h
Peak-hour factor, PHF	0.87	
Peak 15-min volume, v15	486	v
Trucks and buses	10	%
Recreational vehicles	0	%
Terrain type:	Level	
Grade	-	%
Segment length	-	mi
Trucks and buses PCE, ET	1.5*	
Recreational vehicle PCE, ER	1.2	
Heavy vehicle adjustment, fHV	0.952	
Driver population factor, fp	1.00	
Flow rate, vp	680	pc/h/ln

Speed Inputs and Adjustments

Lane width	-	ft
Right-side lateral clearance	-	ft
Total ramp density, TRD	-	ramps/mi
Number of lanes, N	3	
Free-flow speed:	Measured	
FFS or BFFS	70.0	mi/h
Lane width adjustment, fLW	-	mi/h
Lateral clearance adjustment, fLC	-	mi/h
TRD adjustment	-	mi/h
Free-flow speed, FFS	70.0	mi/h

LOS and Performance Measures

Flow rate, vp	680	pc/h/ln
Free-flow speed, FFS	70.0	mi/h
Average passenger-car speed, S	70.0	mi/h
Number of lanes, N	3	
Density, D	9.7	pc/mi/ln
Level of service, LOS	A	

Overall results are not computed when free-flow speed is less than 55 mph.

Phone: Fax:
E-mail:

Operational Analysis

Analyst:	ACS
Agency or Company:	Fehr and Peers
Date Performed:	8/21/2014
Analysis Time Period:	PM Peak Hour
Freeway/Direction:	STATE ROUTE 138-WB
From/To:	I-5 Connector to 1-Gorman Post
Jurisdiction:	CAltrans
Analysis Year:	2025 Alt 1
Description:	STATE ROUTE 138 HCS ANALYSIS

Flow Inputs and Adjustments

Volume, V	1210	veh/h
Peak-hour factor, PHF	0.86	
Peak 15-min volume, v15	352	v
Trucks and buses	10	%
Recreational vehicles	0	%
Terrain type:	Level	
Grade	-	%
Segment length	-	mi
Trucks and buses PCE, ET	1.5*	
Recreational vehicle PCE, ER	1.2	
Heavy vehicle adjustment, fHV	0.952	
Driver population factor, fp	1.00	
Flow rate, vp	492	pc/h/ln

Speed Inputs and Adjustments

Lane width	-	ft
Right-side lateral clearance	-	ft
Total ramp density, TRD	-	ramps/mi
Number of lanes, N	3	
Free-flow speed:	Measured	
FFS or BFFS	70.0	mi/h
Lane width adjustment, fLW	-	mi/h
Lateral clearance adjustment, fLC	-	mi/h
TRD adjustment	-	mi/h
Free-flow speed, FFS	70.0	mi/h

LOS and Performance Measures

Flow rate, vp	492	pc/h/ln
Free-flow speed, FFS	70.0	mi/h
Average passenger-car speed, S	70.0	mi/h
Number of lanes, N	3	
Density, D	7.0	pc/mi/ln
Level of service, LOS	A	

Overall results are not computed when free-flow speed is less than 55 mph.

Phone: Fax:
E-mail:

Operational Analysis

Analyst:	ACS
Agency or Company:	Fehr and Peers
Date Performed:	8/21/2014
Analysis Time Period:	AM Peak Hour
Freeway/Direction:	STATE ROUTE 138-EB
From/To:	Gorman Post to Private Rd
Jurisdiction:	CAltrans
Analysis Year:	2025 Alt 1
Description:	STATE ROUTE 138 HCS ANALYSIS

Flow Inputs and Adjustments

Volume, V	960	veh/h
Peak-hour factor, PHF	0.79	
Peak 15-min volume, v15	304	v
Trucks and buses	10	%
Recreational vehicles	0	%
Terrain type:	Level	
Grade	-	%
Segment length	-	mi
Trucks and buses PCE, ET	1.5*	
Recreational vehicle PCE, ER	1.2	
Heavy vehicle adjustment, fHV	0.952	
Driver population factor, fp	1.00	
Flow rate, vp	425	pc/h/ln

Speed Inputs and Adjustments

Lane width	-	ft
Right-side lateral clearance	-	ft
Total ramp density, TRD	-	ramps/mi
Number of lanes, N	3	
Free-flow speed:	Measured	
FFS or BFFS	70.0	mi/h
Lane width adjustment, fLW	-	mi/h
Lateral clearance adjustment, fLC	-	mi/h
TRD adjustment	-	mi/h
Free-flow speed, FFS	70.0	mi/h

LOS and Performance Measures

Flow rate, vp	425	pc/h/ln
Free-flow speed, FFS	70.0	mi/h
Average passenger-car speed, S	70.0	mi/h
Number of lanes, N	3	
Density, D	6.1	pc/mi/ln
Level of service, LOS	A	

Overall results are not computed when free-flow speed is less than 55 mph.

Phone: Fax:
E-mail:

Operational Analysis

Analyst:	ACS
Agency or Company:	Fehr and Peers
Date Performed:	8/21/2014
Analysis Time Period:	PM Peak Hour
Freeway/Direction:	STATE ROUTE 138-EB
From/To:	Gorman Post to Private Rd
Jurisdiction:	CAltrans
Analysis Year:	2025 Alt 1
Description:	STATE ROUTE 138 HCS ANALYSIS

Flow Inputs and Adjustments

Volume, V	1440	veh/h
Peak-hour factor, PHF	0.90	
Peak 15-min volume, v15	400	v
Trucks and buses	10	%
Recreational vehicles	0	%
Terrain type:	Level	
Grade	-	%
Segment length	-	mi
Trucks and buses PCE, ET	1.5*	
Recreational vehicle PCE, ER	1.2	
Heavy vehicle adjustment, fHV	0.952	
Driver population factor, fp	1.00	
Flow rate, vp	560	pc/h/ln

Speed Inputs and Adjustments

Lane width	-	ft
Right-side lateral clearance	-	ft
Total ramp density, TRD	-	ramps/mi
Number of lanes, N	3	
Free-flow speed:	Measured	
FFS or BFFS	70.0	mi/h
Lane width adjustment, fLW	-	mi/h
Lateral clearance adjustment, fLC	-	mi/h
TRD adjustment	-	mi/h
Free-flow speed, FFS	70.0	mi/h

LOS and Performance Measures

Flow rate, vp	560	pc/h/ln
Free-flow speed, FFS	70.0	mi/h
Average passenger-car speed, S	70.0	mi/h
Number of lanes, N	3	
Density, D	8.0	pc/mi/ln
Level of service, LOS	A	

Overall results are not computed when free-flow speed is less than 55 mph.

Phone: Fax:
E-mail:

Operational Analysis

Analyst:	ACS
Agency or Company:	Fehr and Peers
Date Performed:	8/21/2014
Analysis Time Period:	AM Peak Hour
Freeway/Direction:	STATE ROUTE 138-WB
From/To:	Gorman Post to Private Rd
Jurisdiction:	CAltrans
Analysis Year:	2025 Alt 1
Description:	STATE ROUTE 138 HCS ANALYSIS

Flow Inputs and Adjustments

Volume, V	1500	veh/h
Peak-hour factor, PHF	0.79	
Peak 15-min volume, v15	475	v
Trucks and buses	10	%
Recreational vehicles	0	%
Terrain type:	Level	
Grade	-	%
Segment length	-	mi
Trucks and buses PCE, ET	1.5*	
Recreational vehicle PCE, ER	1.2	
Heavy vehicle adjustment, fHV	0.952	
Driver population factor, fp	1.00	
Flow rate, vp	665	pc/h/ln

Speed Inputs and Adjustments

Lane width	-	ft
Right-side lateral clearance	-	ft
Total ramp density, TRD	-	ramps/mi
Number of lanes, N	3	
Free-flow speed:	Measured	
FFS or BFFS	70.0	mi/h
Lane width adjustment, fLW	-	mi/h
Lateral clearance adjustment, fLC	-	mi/h
TRD adjustment	-	mi/h
Free-flow speed, FFS	70.0	mi/h

LOS and Performance Measures

Flow rate, vp	665	pc/h/ln
Free-flow speed, FFS	70.0	mi/h
Average passenger-car speed, S	70.0	mi/h
Number of lanes, N	3	
Density, D	9.5	pc/mi/ln
Level of service, LOS	A	

Overall results are not computed when free-flow speed is less than 55 mph.

Phone: Fax:
E-mail:

Operational Analysis

Analyst:	ACS
Agency or Company:	Fehr and Peers
Date Performed:	8/21/2014
Analysis Time Period:	PM Peak Hour
Freeway/Direction:	STATE ROUTE 138-WB
From/To:	Gorman Post to Private Rd
Jurisdiction:	CAltrans
Analysis Year:	2025 Alt 1
Description:	STATE ROUTE 138 HCS ANALYSIS

Flow Inputs and Adjustments

Volume, V	1220	veh/h
Peak-hour factor, PHF	0.90	
Peak 15-min volume, v15	339	v
Trucks and buses	10	%
Recreational vehicles	0	%
Terrain type:	Level	
Grade	-	%
Segment length	-	mi
Trucks and buses PCE, ET	1.5*	
Recreational vehicle PCE, ER	1.2	
Heavy vehicle adjustment, fHV	0.952	
Driver population factor, fp	1.00	
Flow rate, vp	474	pc/h/ln

Speed Inputs and Adjustments

Lane width	-	ft
Right-side lateral clearance	-	ft
Total ramp density, TRD	-	ramps/mi
Number of lanes, N	3	
Free-flow speed:	Measured	
FFS or BFFS	70.0	mi/h
Lane width adjustment, fLW	-	mi/h
Lateral clearance adjustment, fLC	-	mi/h
TRD adjustment	-	mi/h
Free-flow speed, FFS	70.0	mi/h

LOS and Performance Measures

Flow rate, vp	474	pc/h/ln
Free-flow speed, FFS	70.0	mi/h
Average passenger-car speed, S	70.0	mi/h
Number of lanes, N	3	
Density, D	6.8	pc/mi/ln
Level of service, LOS	A	

Overall results are not computed when free-flow speed is less than 55 mph.

Phone: Fax:
E-mail:

Operational Analysis

Analyst:	ACS
Agency or Company:	Fehr and Peers
Date Performed:	8/21/2014
Analysis Time Period:	AM Peak Hour
Freeway/Direction:	STATE ROUTE 138-EB
From/To:	Private Rd to 300th St
Jurisdiction:	CAltrans
Analysis Year:	2025 Alt 1
Description:	STATE ROUTE 138 HCS ANALYSIS

Flow Inputs and Adjustments

Volume, V	1030	veh/h
Peak-hour factor, PHF	0.72	
Peak 15-min volume, v15	358	v
Trucks and buses	10	%
Recreational vehicles	0	%
Terrain type:	Level	
Grade	-	%
Segment length	-	mi
Trucks and buses PCE, ET	1.5*	
Recreational vehicle PCE, ER	1.2	
Heavy vehicle adjustment, fHV	0.952	
Driver population factor, fp	1.00	
Flow rate, vp	501	pc/h/ln

Speed Inputs and Adjustments

Lane width	-	ft
Right-side lateral clearance	-	ft
Total ramp density, TRD	-	ramps/mi
Number of lanes, N	3	
Free-flow speed:	Measured	
FFS or BFFS	70.0	mi/h
Lane width adjustment, fLW	-	mi/h
Lateral clearance adjustment, fLC	-	mi/h
TRD adjustment	-	mi/h
Free-flow speed, FFS	70.0	mi/h

LOS and Performance Measures

Flow rate, vp	501	pc/h/ln
Free-flow speed, FFS	70.0	mi/h
Average passenger-car speed, S	70.0	mi/h
Number of lanes, N	3	
Density, D	7.2	pc/mi/ln
Level of service, LOS	A	

Overall results are not computed when free-flow speed is less than 55 mph.

Phone: Fax:
E-mail:

Operational Analysis

Analyst:	ACS
Agency or Company:	Fehr and Peers
Date Performed:	8/21/2014
Analysis Time Period:	PM Peak Hour
Freeway/Direction:	STATE ROUTE 138-EB
From/To:	Private Rd to 300th St
Jurisdiction:	CAltrans
Analysis Year:	2025 Alt 1
Description:	STATE ROUTE 138 HCS ANALYSIS

Flow Inputs and Adjustments

Volume, V	1380	veh/h
Peak-hour factor, PHF	0.77	
Peak 15-min volume, v15	448	v
Trucks and buses	10	%
Recreational vehicles	0	%
Terrain type:	Level	
Grade	-	%
Segment length	-	mi
Trucks and buses PCE, ET	1.5*	
Recreational vehicle PCE, ER	1.2	
Heavy vehicle adjustment, fHV	0.952	
Driver population factor, fp	1.00	
Flow rate, vp	627	pc/h/ln

Speed Inputs and Adjustments

Lane width	-	ft
Right-side lateral clearance	-	ft
Total ramp density, TRD	-	ramps/mi
Number of lanes, N	3	
Free-flow speed:	Measured	
FFS or BFFS	70.0	mi/h
Lane width adjustment, fLW	-	mi/h
Lateral clearance adjustment, fLC	-	mi/h
TRD adjustment	-	mi/h
Free-flow speed, FFS	70.0	mi/h

LOS and Performance Measures

Flow rate, vp	627	pc/h/ln
Free-flow speed, FFS	70.0	mi/h
Average passenger-car speed, S	70.0	mi/h
Number of lanes, N	3	
Density, D	9.0	pc/mi/ln
Level of service, LOS	A	

Overall results are not computed when free-flow speed is less than 55 mph.

Phone: Fax:
E-mail:

Operational Analysis

Analyst:	ACS
Agency or Company:	Fehr and Peers
Date Performed:	8/21/2014
Analysis Time Period:	AM Peak Hour
Freeway/Direction:	STATE ROUTE 138-WB
From/To:	Private Rd to 300th St
Jurisdiction:	CAltrans
Analysis Year:	2025 Alt 1
Description:	STATE ROUTE 138 HCS ANALYSIS

Flow Inputs and Adjustments

Volume, V	1460	veh/h
Peak-hour factor, PHF	0.72	
Peak 15-min volume, v15	507	v
Trucks and buses	10	%
Recreational vehicles	0	%
Terrain type:	Level	
Grade	-	%
Segment length	-	mi
Trucks and buses PCE, ET	1.5*	
Recreational vehicle PCE, ER	1.2	
Heavy vehicle adjustment, fHV	0.952	
Driver population factor, fp	1.00	
Flow rate, vp	710	pc/h/ln

Speed Inputs and Adjustments

Lane width	-	ft
Right-side lateral clearance	-	ft
Total ramp density, TRD	-	ramps/mi
Number of lanes, N	3	
Free-flow speed:	Measured	
FFS or BFFS	70.0	mi/h
Lane width adjustment, fLW	-	mi/h
Lateral clearance adjustment, fLC	-	mi/h
TRD adjustment	-	mi/h
Free-flow speed, FFS	70.0	mi/h

LOS and Performance Measures

Flow rate, vp	710	pc/h/ln
Free-flow speed, FFS	70.0	mi/h
Average passenger-car speed, S	70.0	mi/h
Number of lanes, N	3	
Density, D	10.1	pc/mi/ln
Level of service, LOS	A	

Overall results are not computed when free-flow speed is less than 55 mph.

Phone: Fax:
E-mail:

Operational Analysis

Analyst:	ACS
Agency or Company:	Fehr and Peers
Date Performed:	8/21/2014
Analysis Time Period:	PM Peak Hour
Freeway/Direction:	STATE ROUTE 138-WB
From/To:	Private Rd to 300th St
Jurisdiction:	CAltrans
Analysis Year:	2025 Alt 1
Description:	STATE ROUTE 138 HCS ANALYSIS

Flow Inputs and Adjustments

Volume, V	1340	veh/h
Peak-hour factor, PHF	0.77	
Peak 15-min volume, v15	435	v
Trucks and buses	10	%
Recreational vehicles	0	%
Terrain type:	Level	
Grade	-	%
Segment length	-	mi
Trucks and buses PCE, ET	1.5*	
Recreational vehicle PCE, ER	1.2	
Heavy vehicle adjustment, fHV	0.952	
Driver population factor, fp	1.00	
Flow rate, vp	609	pc/h/ln

Speed Inputs and Adjustments

Lane width	-	ft
Right-side lateral clearance	-	ft
Total ramp density, TRD	-	ramps/mi
Number of lanes, N	3	
Free-flow speed:	Measured	
FFS or BFFS	70.0	mi/h
Lane width adjustment, fLW	-	mi/h
Lateral clearance adjustment, fLC	-	mi/h
TRD adjustment	-	mi/h
Free-flow speed, FFS	70.0	mi/h

LOS and Performance Measures

Flow rate, vp	609	pc/h/ln
Free-flow speed, FFS	70.0	mi/h
Average passenger-car speed, S	70.0	mi/h
Number of lanes, N	3	
Density, D	8.7	pc/mi/ln
Level of service, LOS	A	

Overall results are not computed when free-flow speed is less than 55 mph.

Phone: Fax:
E-mail:

OPERATIONAL ANALYSIS

Analyst:	ACS
Agency/Co:	Fehr and Peers
Date:	8/21/2014
Analysis Period:	AM Peak Hour
Highway:	STATE ROUTE 138
From/To:	280th St to 270th St
Jurisdiction:	CALTRANS
Analysis Year:	2025 Alt 1
Project ID:	STATE ROUTE 138 HCS ANALYSIS

FREE-FLOW SPEED

Direction	1		2	
Lane width	12.0	ft	12.0	ft
Lateral clearance:				
Right edge	6.0	ft	6.0	ft
Left edge	6.0	ft	6.0	ft
Total lateral clearance	12.0	ft	12.0	ft
Access points per mile	1		1	
Median type	Divided		Divided	
Free-flow speed:	Base		Base	
FFS or BFFS	60.0	mph	60.0	mph
Lane width adjustment, FLW	0.0	mph	0.0	mph
Lateral clearance adjustment, FLC	0.0	mph	0.0	mph
Median type adjustment, FM	0.0	mph	0.0	mph
Access points adjustment, FA	0.3	mph	0.3	mph
Free-flow speed	59.8	mph	59.8	mph

VOLUME

Direction	1		2	
Volume, V	910	vph	1110	vph
Peak-hour factor, PHF	0.97		0.97	
Peak 15-minute volume, v15	235		286	
Trucks and buses	10	%	10	%
Recreational vehicles	0	%	0	%
Terrain type	Level		Level	
Grade	0.00	%	0.00	%
Segment length	0.00	mi	0.00	mi
Number of lanes	2		2	
Driver population adjustment, fP	1.00		1.00	
Trucks and buses PCE, ET	1.5		1.5	
Recreational vehicles PCE, ER	1.2		1.2	
Heavy vehicle adjustment, fHV	0.952		0.952	
Flow rate, vp	492	pcphpl	600	pcphpl

RESULTS

Direction	1		2	
Flow rate, vp	492	pcphpl	600	pcphpl
Free-flow speed, FFS	59.8	mph	59.8	mph
Avg. passenger-car travel speed, S	60.0	mph	60.0	mph
Level of service, LOS	A		A	
Density, D	8.2	pc/mi/ln	10.0	pc/mi/ln

Bicycle Level of Service

Posted speed limit, Sp		55
Percent of segment with occupied on-highway parking	0	0
Pavement rating, P	3	3
Flow rate in outside lane, vOL	469.1	572.2
Effective width of outside lane, We	24.00	24.00
Effective speed factor, St	4.79	4.79
Bicycle LOS Score, BLOS	5.06	5.16
Bicycle LOS	E	E

Overall results are not computed when free-flow speed is less than 45 mph.

Phone: Fax:
E-mail:

OPERATIONAL ANALYSIS

Analyst:	ACS
Agency/Co:	Fehr and Peers
Date:	8/21/2014
Analysis Period:	PM Peak Hour
Highway:	STATE ROUTE 138
From/To:	280th St to 270th St
Jurisdiction:	CALTRANS
Analysis Year:	2025 Alt 1
Project ID:	STATE ROUTE 138 HCS ANALYSIS

FREE-FLOW SPEED

Direction	1		2	
Lane width	12.0	ft	12.0	ft
Lateral clearance:				
Right edge	6.0	ft	6.0	ft
Left edge	6.0	ft	6.0	ft
Total lateral clearance	12.0	ft	12.0	ft
Access points per mile	1		1	
Median type	Divided		Divided	
Free-flow speed:	Base		Base	
FFS or BFFS	60.0	mph	60.0	mph
Lane width adjustment, FLW	0.0	mph	0.0	mph
Lateral clearance adjustment, FLC	0.0	mph	0.0	mph
Median type adjustment, FM	0.0	mph	0.0	mph
Access points adjustment, FA	0.3	mph	0.3	mph
Free-flow speed	59.8	mph	59.8	mph

VOLUME

Direction	1		2	
Volume, V	880	vph	1190	vph
Peak-hour factor, PHF	0.90		0.90	
Peak 15-minute volume, v15	244		331	
Trucks and buses	10	%	10	%
Recreational vehicles	0	%	0	%
Terrain type	Level		Level	
Grade	0.00	%	0.00	%
Segment length	0.00	mi	0.00	mi
Number of lanes	2		2	
Driver population adjustment, fP	1.00		1.00	
Trucks and buses PCE, ET	1.5		1.5	
Recreational vehicles PCE, ER	1.2		1.2	
Heavy vehicle adjustment, fHV	0.952		0.952	
Flow rate, vp	513	pcphpl	694	pcphpl

RESULTS

Direction	1		2	
Flow rate, vp	513	pcphpl	694	pcphpl
Free-flow speed, FFS	59.8	mph	59.8	mph
Avg. passenger-car travel speed, S	60.0	mph	60.0	mph
Level of service, LOS	A		B	
Density, D	8.6	pc/mi/ln	11.6	pc/mi/ln

Bicycle Level of Service

Posted speed limit, Sp		55
Percent of segment with occupied on-highway parking	0	0
Pavement rating, P	3	3
Flow rate in outside lane, vOL	488.9	661.1
Effective width of outside lane, We	24.00	24.00
Effective speed factor, St	4.79	4.79
Bicycle LOS Score, BLOS	5.08	5.23
Bicycle LOS	E	E

Overall results are not computed when free-flow speed is less than 45 mph.

Phone: Fax:
E-mail:

OPERATIONAL ANALYSIS

Analyst:	ACS
Agency/Co:	Fehr and Peers
Date:	8/21/2014
Analysis Period:	AM Peak Hour
Highway:	STATE ROUTE 138
From/To:	Three Points Rd to 245th St
Jurisdiction:	CALTRANS
Analysis Year:	2025 Alt 1
Project ID:	STATE ROUTE 138 HCS ANALYSIS

FREE-FLOW SPEED

Direction	1		2	
Lane width	12.0	ft	12.0	ft
Lateral clearance:				
Right edge	6.0	ft	6.0	ft
Left edge	6.0	ft	6.0	ft
Total lateral clearance	12.0	ft	12.0	ft
Access points per mile	1		1	
Median type	Divided		Divided	
Free-flow speed:	Base		Base	
FFS or BFFS	60.0	mph	60.0	mph
Lane width adjustment, FLW	0.0	mph	0.0	mph
Lateral clearance adjustment, FLC	0.0	mph	0.0	mph
Median type adjustment, FM	0.0	mph	0.0	mph
Access points adjustment, FA	0.3	mph	0.3	mph
Free-flow speed	59.8	mph	59.8	mph

VOLUME

Direction	1		2	
Volume, V	910	vph	1110	vph
Peak-hour factor, PHF	0.79		0.79	
Peak 15-minute volume, v15	288		351	
Trucks and buses	10	%	10	%
Recreational vehicles	0	%	0	%
Terrain type	Level		Level	
Grade	0.00	%	0.00	%
Segment length	0.00	mi	0.00	mi
Number of lanes	2		2	
Driver population adjustment, fP	1.00		1.00	
Trucks and buses PCE, ET	1.5		1.5	
Recreational vehicles PCE, ER	1.2		1.2	
Heavy vehicle adjustment, fHV	0.952		0.952	
Flow rate, vp	604	pcphpl	737	pcphpl

RESULTS

Direction	1		2	
Flow rate, vp	604	pcphpl	737	pcphpl
Free-flow speed, FFS	59.8	mph	59.8	mph
Avg. passenger-car travel speed, S	60.0	mph	60.0	mph
Level of service, LOS	A		B	
Density, D	10.1	pc/mi/ln	12.3	pc/mi/ln

Bicycle Level of Service

Posted speed limit, Sp		55
Percent of segment with occupied on-highway parking	0	0
Pavement rating, P	3	3
Flow rate in outside lane, vOL	575.9	702.5
Effective width of outside lane, We	24.00	24.00
Effective speed factor, St	4.79	4.79
Bicycle LOS Score, BLOS	5.16	5.26
Bicycle LOS	E	E

Overall results are not computed when free-flow speed is less than 45 mph.

Phone: Fax:
E-mail:

OPERATIONAL ANALYSIS

Analyst:	ACS
Agency/Co:	Fehr and Peers
Date:	8/21/2014
Analysis Period:	PM Peak Hour
Highway:	STATE ROUTE 138
From/To:	Three Points Rd to 245th St
Jurisdiction:	CALTRANS
Analysis Year:	2025 Alt 1
Project ID:	STATE ROUTE 138 HCS ANALYSIS

FREE-FLOW SPEED

Direction	1		2	
Lane width	12.0	ft	12.0	ft
Lateral clearance:				
Right edge	6.0	ft	6.0	ft
Left edge	6.0	ft	6.0	ft
Total lateral clearance	12.0	ft	12.0	ft
Access points per mile	1		1	
Median type	Divided		Divided	
Free-flow speed:	Base		Base	
FFS or BFFS	60.0	mph	60.0	mph
Lane width adjustment, FLW	0.0	mph	0.0	mph
Lateral clearance adjustment, FLC	0.0	mph	0.0	mph
Median type adjustment, FM	0.0	mph	0.0	mph
Access points adjustment, FA	0.3	mph	0.3	mph
Free-flow speed	59.8	mph	59.8	mph

VOLUME

Direction	1		2	
Volume, V	880	vph	1190	vph
Peak-hour factor, PHF	0.89		0.89	
Peak 15-minute volume, v15	247		334	
Trucks and buses	10	%	10	%
Recreational vehicles	0	%	0	%
Terrain type	Level		Level	
Grade	0.00	%	0.00	%
Segment length	0.00	mi	0.00	mi
Number of lanes	2		2	
Driver population adjustment, fP	1.00		1.00	
Trucks and buses PCE, ET	1.5		1.5	
Recreational vehicles PCE, ER	1.2		1.2	
Heavy vehicle adjustment, fHV	0.952		0.952	
Flow rate, vp	519	pcphpl	701	pcphpl

RESULTS

Direction	1		2	
Flow rate, vp	519	pcphpl	701	pcphpl
Free-flow speed, FFS	59.8	mph	59.8	mph
Avg. passenger-car travel speed, S	60.0	mph	60.0	mph
Level of service, LOS	A		B	
Density, D	8.6	pc/mi/ln	11.7	pc/mi/ln

Bicycle Level of Service

Posted speed limit, Sp		55
Percent of segment with occupied on-highway parking	0	0
Pavement rating, P	3	3
Flow rate in outside lane, vOL	494.4	668.5
Effective width of outside lane, We	24.00	24.00
Effective speed factor, St	4.79	4.79
Bicycle LOS Score, BLOS	5.09	5.24
Bicycle LOS	E	E

Overall results are not computed when free-flow speed is less than 45 mph.

Phone: Fax:
E-mail:

OPERATIONAL ANALYSIS

Analyst:	ACS
Agency/Co:	Fehr and Peers
Date:	8/21/2014
Analysis Period:	AM Peak Hour
Highway:	STATE ROUTE 138
From/To:	230th St to 190th St
Jurisdiction:	CALTRANS
Analysis Year:	2025 Alt 1
Project ID:	STATE ROUTE 138 HCS ANALYSIS

FREE-FLOW SPEED

Direction	1		2	
Lane width	12.0	ft	12.0	ft
Lateral clearance:				
Right edge	6.0	ft	6.0	ft
Left edge	6.0	ft	6.0	ft
Total lateral clearance	12.0	ft	12.0	ft
Access points per mile	1		1	
Median type	Divided		Divided	
Free-flow speed:	Base		Base	
FFS or BFFS	60.0	mph	60.0	mph
Lane width adjustment, FLW	0.0	mph	0.0	mph
Lateral clearance adjustment, FLC	0.0	mph	0.0	mph
Median type adjustment, FM	0.0	mph	0.0	mph
Access points adjustment, FA	0.3	mph	0.3	mph
Free-flow speed	59.8	mph	59.8	mph

VOLUME

Direction	1		2	
Volume, V	820	vph	1050	vph
Peak-hour factor, PHF	0.82		0.82	
Peak 15-minute volume, v15	250		320	
Trucks and buses	10	%	10	%
Recreational vehicles	0	%	0	%
Terrain type	Level		Level	
Grade	0.00	%	0.00	%
Segment length	0.00	mi	0.00	mi
Number of lanes	2		2	
Driver population adjustment, fP	1.00		1.00	
Trucks and buses PCE, ET	1.5		1.5	
Recreational vehicles PCE, ER	1.2		1.2	
Heavy vehicle adjustment, fHV	0.952		0.952	
Flow rate, vp	525	pcphpl	672	pcphpl

RESULTS

Direction	1		2	
Flow rate, vp	525	pcphpl	672	pcphpl
Free-flow speed, FFS	59.8	mph	59.8	mph
Avg. passenger-car travel speed, S	60.0	mph	60.0	mph
Level of service, LOS	A		B	
Density, D	8.8	pc/mi/ln	11.2	pc/mi/ln

Bicycle Level of Service

Posted speed limit, Sp		55
Percent of segment with occupied on-highway parking	0	0
Pavement rating, P	3	3
Flow rate in outside lane, vOL	500.0	640.2
Effective width of outside lane, We	24.00	24.00
Effective speed factor, St	4.79	4.79
Bicycle LOS Score, BLOS	5.09	5.22
Bicycle LOS	E	E

Overall results are not computed when free-flow speed is less than 45 mph.

Phone: Fax:
E-mail:

OPERATIONAL ANALYSIS

Analyst:	ACS
Agency/Co:	Fehr and Peers
Date:	8/21/2014
Analysis Period:	PM Peak Hour
Highway:	STATE ROUTE 138
From/To:	230th St to 190th St
Jurisdiction:	CALTRANS
Analysis Year:	2025 Alt 1
Project ID:	STATE ROUTE 138 HCS ANALYSIS

FREE-FLOW SPEED

Direction	1		2	
Lane width	12.0	ft	12.0	ft
Lateral clearance:				
Right edge	6.0	ft	6.0	ft
Left edge	6.0	ft	6.0	ft
Total lateral clearance	12.0	ft	12.0	ft
Access points per mile	1		1	
Median type	Divided		Divided	
Free-flow speed:	Base		Base	
FFS or BFFS	60.0	mph	60.0	mph
Lane width adjustment, FLW	0.0	mph	0.0	mph
Lateral clearance adjustment, FLC	0.0	mph	0.0	mph
Median type adjustment, FM	0.0	mph	0.0	mph
Access points adjustment, FA	0.3	mph	0.3	mph
Free-flow speed	59.8	mph	59.8	mph

VOLUME

Direction	1		2	
Volume, V	900	vph	1150	vph
Peak-hour factor, PHF	0.88		0.88	
Peak 15-minute volume, v15	256		327	
Trucks and buses	10	%	10	%
Recreational vehicles	0	%	0	%
Terrain type	Level		Level	
Grade	0.00	%	0.00	%
Segment length	0.00	mi	0.00	mi
Number of lanes	2		2	
Driver population adjustment, fP	1.00		1.00	
Trucks and buses PCE, ET	1.5		1.5	
Recreational vehicles PCE, ER	1.2		1.2	
Heavy vehicle adjustment, fHV	0.952		0.952	
Flow rate, vp	536	pcphpl	686	pcphpl

RESULTS

Direction	1		2	
Flow rate, vp	536	pcphpl	686	pcphpl
Free-flow speed, FFS	59.8	mph	59.8	mph
Avg. passenger-car travel speed, S	60.0	mph	60.0	mph
Level of service, LOS	A		B	
Density, D	8.9	pc/mi/ln	11.4	pc/mi/ln

Bicycle Level of Service

Posted speed limit, Sp		55
Percent of segment with occupied on-highway parking	0	0
Pavement rating, P	3	3
Flow rate in outside lane, vOL	511.4	653.4
Effective width of outside lane, We	24.00	24.00
Effective speed factor, St	4.79	4.79
Bicycle LOS Score, BLOS	5.10	5.23
Bicycle LOS	E	E

Overall results are not computed when free-flow speed is less than 45 mph.

Phone: Fax:
E-mail:

OPERATIONAL ANALYSIS

Analyst:	ACS
Agency/Co:	Fehr and Peers
Date:	8/21/2014
Analysis Period:	AM Peak Hour
Highway:	STATE ROUTE 138
From/To:	190th St to 130th St
Jurisdiction:	CALTRANS
Analysis Year:	2025 Alt 1
Project ID:	STATE ROUTE 138 HCS ANALYSIS

FREE-FLOW SPEED

Direction	1		2	
Lane width	12.0	ft	12.0	ft
Lateral clearance:				
Right edge	6.0	ft	6.0	ft
Left edge	6.0	ft	6.0	ft
Total lateral clearance	12.0	ft	12.0	ft
Access points per mile	1		1	
Median type	Divided		Divided	
Free-flow speed:	Base		Base	
FFS or BFFS	60.0	mph	60.0	mph
Lane width adjustment, FLW	0.0	mph	0.0	mph
Lateral clearance adjustment, FLC	0.0	mph	0.0	mph
Median type adjustment, FM	0.0	mph	0.0	mph
Access points adjustment, FA	0.3	mph	0.3	mph
Free-flow speed	59.8	mph	59.8	mph

VOLUME

Direction	1		2	
Volume, V	660	vph	1010	vph
Peak-hour factor, PHF	0.72		0.72	
Peak 15-minute volume, v15	229		351	
Trucks and buses	10	%	10	%
Recreational vehicles	0	%	0	%
Terrain type	Level		Level	
Grade	0.00	%	0.00	%
Segment length	0.00	mi	0.00	mi
Number of lanes	2		2	
Driver population adjustment, fP	1.00		1.00	
Trucks and buses PCE, ET	1.5		1.5	
Recreational vehicles PCE, ER	1.2		1.2	
Heavy vehicle adjustment, fHV	0.952		0.952	
Flow rate, vp	481	pcphpl	736	pcphpl

RESULTS

Direction	1		2	
Flow rate, vp	481	pcphpl	736	pcphpl
Free-flow speed, FFS	59.8	mph	59.8	mph
Avg. passenger-car travel speed, S	60.0	mph	60.0	mph
Level of service, LOS	A		B	
Density, D	8.0	pc/mi/ln	12.3	pc/mi/ln

Bicycle Level of Service

Posted speed limit, Sp		55
Percent of segment with occupied on-highway parking	0	0
Pavement rating, P	3	3
Flow rate in outside lane, vOL	458.3	701.4
Effective width of outside lane, We	24.00	24.00
Effective speed factor, St	4.79	4.79
Bicycle LOS Score, BLOS	5.05	5.26
Bicycle LOS	E	E

Overall results are not computed when free-flow speed is less than 45 mph.

Phone: Fax:
E-mail:

OPERATIONAL ANALYSIS

Analyst:	ACS
Agency/Co:	Fehr and Peers
Date:	8/21/2014
Analysis Period:	PM Peak Hour
Highway:	STATE ROUTE 138
From/To:	190th St to 130th St
Jurisdiction:	CALTRANS
Analysis Year:	2025 Alt 1
Project ID:	STATE ROUTE 138 HCS ANALYSIS

FREE-FLOW SPEED

Direction	1		2	
Lane width	12.0	ft	12.0	ft
Lateral clearance:				
Right edge	6.0	ft	6.0	ft
Left edge	6.0	ft	6.0	ft
Total lateral clearance	12.0	ft	12.0	ft
Access points per mile	1		1	
Median type	Divided		Divided	
Free-flow speed:	Base		Base	
FFS or BFFS	60.0	mph	60.0	mph
Lane width adjustment, FLW	0.0	mph	0.0	mph
Lateral clearance adjustment, FLC	0.0	mph	0.0	mph
Median type adjustment, FM	0.0	mph	0.0	mph
Access points adjustment, FA	0.3	mph	0.3	mph
Free-flow speed	59.8	mph	59.8	mph

VOLUME

Direction	1		2	
Volume, V	760	vph	1100	vph
Peak-hour factor, PHF	0.89		0.89	
Peak 15-minute volume, v15	213		309	
Trucks and buses	10	%	10	%
Recreational vehicles	0	%	0	%
Terrain type	Level		Level	
Grade	0.00	%	0.00	%
Segment length	0.00	mi	0.00	mi
Number of lanes	2		2	
Driver population adjustment, fP	1.00		1.00	
Trucks and buses PCE, ET	1.5		1.5	
Recreational vehicles PCE, ER	1.2		1.2	
Heavy vehicle adjustment, fHV	0.952		0.952	
Flow rate, vp	448	pcphpl	648	pcphpl

RESULTS

Direction	1		2	
Flow rate, vp	448	pcphpl	648	pcphpl
Free-flow speed, FFS	59.8	mph	59.8	mph
Avg. passenger-car travel speed, S	60.0	mph	60.0	mph
Level of service, LOS	A		A	
Density, D	7.5	pc/mi/ln	10.8	pc/mi/ln

Bicycle Level of Service

Posted speed limit, Sp		55
Percent of segment with occupied on-highway parking	0	0
Pavement rating, P	3	3
Flow rate in outside lane, vOL	427.0	618.0
Effective width of outside lane, We	24.00	24.00
Effective speed factor, St	4.79	4.79
Bicycle LOS Score, BLOS	5.01	5.20
Bicycle LOS	E	E

Overall results are not computed when free-flow speed is less than 45 mph.

Phone: Fax:
E-mail:

OPERATIONAL ANALYSIS

Analyst:	ACS
Agency/Co:	Fehr and Peers
Date:	8/21/2014
Analysis Period:	AM Peak Hour
Highway:	STATE ROUTE 138
From/To:	130th St to 80th St
Jurisdiction:	CALTRANS
Analysis Year:	2025 Alt 1
Project ID:	STATE ROUTE 138 HCS ANALYSIS

FREE-FLOW SPEED

Direction	1		2	
Lane width	12.0	ft	12.0	ft
Lateral clearance:				
Right edge	6.0	ft	6.0	ft
Left edge	6.0	ft	6.0	ft
Total lateral clearance	12.0	ft	12.0	ft
Access points per mile	1		1	
Median type	Divided		Divided	
Free-flow speed:	Base		Base	
FFS or BFFS	60.0	mph	60.0	mph
Lane width adjustment, FLW	0.0	mph	0.0	mph
Lateral clearance adjustment, FLC	0.0	mph	0.0	mph
Median type adjustment, FM	0.0	mph	0.0	mph
Access points adjustment, FA	0.3	mph	0.3	mph
Free-flow speed	59.8	mph	59.8	mph

VOLUME

Direction	1		2	
Volume, V	730	vph	900	vph
Peak-hour factor, PHF	0.85		0.85	
Peak 15-minute volume, v15	215		265	
Trucks and buses	10	%	10	%
Recreational vehicles	0	%	0	%
Terrain type	Level		Level	
Grade	0.00	%	0.00	%
Segment length	0.00	mi	0.00	mi
Number of lanes	2		2	
Driver population adjustment, fP	1.00		1.00	
Trucks and buses PCE, ET	1.5		1.5	
Recreational vehicles PCE, ER	1.2		1.2	
Heavy vehicle adjustment, fHV	0.952		0.952	
Flow rate, vp	450	pcphpl	555	pcphpl

RESULTS

Direction	1		2	
Flow rate, vp	450	pcphpl	555	pcphpl
Free-flow speed, FFS	59.8	mph	59.8	mph
Avg. passenger-car travel speed, S	60.0	mph	60.0	mph
Level of service, LOS	A		A	
Density, D	7.5	pc/mi/ln	9.3	pc/mi/ln

Bicycle Level of Service

Posted speed limit, Sp		55
Percent of segment with occupied on-highway parking	0	0
Pavement rating, P	3	3
Flow rate in outside lane, vOL	429.4	529.4
Effective width of outside lane, We	24.00	24.00
Effective speed factor, St	4.79	4.79
Bicycle LOS Score, BLOS	5.01	5.12
Bicycle LOS	E	E

Overall results are not computed when free-flow speed is less than 45 mph.

Phone: Fax:
E-mail:

OPERATIONAL ANALYSIS

Analyst:	ACS
Agency/Co:	Fehr and Peers
Date:	8/21/2014
Analysis Period:	PM Peak Hour
Highway:	STATE ROUTE 138
From/To:	130th St to 80th St
Jurisdiction:	CALTRANS
Analysis Year:	2025 Alt 1
Project ID:	STATE ROUTE 138 HCS ANALYSIS

FREE-FLOW SPEED

Direction	1		2	
Lane width	12.0	ft	12.0	ft
Lateral clearance:				
Right edge	6.0	ft	6.0	ft
Left edge	6.0	ft	6.0	ft
Total lateral clearance	12.0	ft	12.0	ft
Access points per mile	1		1	
Median type	Divided		Divided	
Free-flow speed:	Base		Base	
FFS or BFFS	60.0	mph	60.0	mph
Lane width adjustment, FLW	0.0	mph	0.0	mph
Lateral clearance adjustment, FLC	0.0	mph	0.0	mph
Median type adjustment, FM	0.0	mph	0.0	mph
Access points adjustment, FA	0.3	mph	0.3	mph
Free-flow speed	59.8	mph	59.8	mph

VOLUME

Direction	1		2	
Volume, V	730	vph	1000	vph
Peak-hour factor, PHF	0.91		0.91	
Peak 15-minute volume, v15	201		275	
Trucks and buses	10	%	10	%
Recreational vehicles	0	%	0	%
Terrain type	Level		Level	
Grade	0.00	%	0.00	%
Segment length	0.00	mi	0.00	mi
Number of lanes	2		2	
Driver population adjustment, fP	1.00		1.00	
Trucks and buses PCE, ET	1.5		1.5	
Recreational vehicles PCE, ER	1.2		1.2	
Heavy vehicle adjustment, fHV	0.952		0.952	
Flow rate, vp	421	pcphpl	576	pcphpl

RESULTS

Direction	1		2	
Flow rate, vp	421	pcphpl	576	pcphpl
Free-flow speed, FFS	59.8	mph	59.8	mph
Avg. passenger-car travel speed, S	60.0	mph	60.0	mph
Level of service, LOS	A		A	
Density, D	7.0	pc/mi/ln	9.6	pc/mi/ln

Bicycle Level of Service

Posted speed limit, Sp		55
Percent of segment with occupied on-highway parking	0	0
Pavement rating, P	3	3
Flow rate in outside lane, vOL	401.1	549.5
Effective width of outside lane, We	24.00	24.00
Effective speed factor, St	4.79	4.79
Bicycle LOS Score, BLOS	4.98	5.14
Bicycle LOS	E	E

Overall results are not computed when free-flow speed is less than 45 mph.

Phone: Fax:
E-mail:

OPERATIONAL ANALYSIS

Analyst:	ACS
Agency/Co:	Fehr and Peers
Date:	8/21/2014
Analysis Period:	AM Peak Hour
Highway:	STATE ROUTE 138
From/To:	80th St to 30th St
Jurisdiction:	CALTRANS
Analysis Year:	2025 Alt 1
Project ID:	STATE ROUTE 138 HCS ANALYSIS

FREE-FLOW SPEED

Direction	1		2	
Lane width	12.0	ft	12.0	ft
Lateral clearance:				
Right edge	6.0	ft	6.0	ft
Left edge	6.0	ft	6.0	ft
Total lateral clearance	12.0	ft	12.0	ft
Access points per mile	1		1	
Median type	Divided		Divided	
Free-flow speed:	Base		Base	
FFS or BFFS	60.0	mph	60.0	mph
Lane width adjustment, FLW	0.0	mph	0.0	mph
Lateral clearance adjustment, FLC	0.0	mph	0.0	mph
Median type adjustment, FM	0.0	mph	0.0	mph
Access points adjustment, FA	0.3	mph	0.3	mph
Free-flow speed	59.8	mph	59.8	mph

VOLUME

Direction	1		2	
Volume, V	660	vph	860	vph
Peak-hour factor, PHF	0.94		0.94	
Peak 15-minute volume, v15	176		229	
Trucks and buses	10	%	10	%
Recreational vehicles	0	%	0	%
Terrain type	Level		Level	
Grade	0.00	%	0.00	%
Segment length	0.00	mi	0.00	mi
Number of lanes	2		2	
Driver population adjustment, fP	1.00		1.00	
Trucks and buses PCE, ET	1.5		1.5	
Recreational vehicles PCE, ER	1.2		1.2	
Heavy vehicle adjustment, fHV	0.952		0.952	
Flow rate, vp	368	pcphpl	480	pcphpl

RESULTS

Direction	1		2	
Flow rate, vp	368	pcphpl	480	pcphpl
Free-flow speed, FFS	59.8	mph	59.8	mph
Avg. passenger-car travel speed, S	60.0	mph	60.0	mph
Level of service, LOS	A		A	
Density, D	6.1	pc/mi/ln	8.0	pc/mi/ln

Bicycle Level of Service

Posted speed limit, Sp		55
Percent of segment with occupied on-highway parking	0	0
Pavement rating, P	3	3
Flow rate in outside lane, vOL	351.1	457.4
Effective width of outside lane, We	24.00	24.00
Effective speed factor, St	4.79	4.79
Bicycle LOS Score, BLOS	4.91	5.05
Bicycle LOS	E	E

Overall results are not computed when free-flow speed is less than 45 mph.

Phone: Fax:
E-mail:

OPERATIONAL ANALYSIS

Analyst:	ACS
Agency/Co:	Fehr and Peers
Date:	8/21/2014
Analysis Period:	PM Peak Hour
Highway:	STATE ROUTE 138
From/To:	80th St to 30th St
Jurisdiction:	CALTRANS
Analysis Year:	2025 Alt 1
Project ID:	STATE ROUTE 138 HCS ANALYSIS

FREE-FLOW SPEED

Direction	1		2	
Lane width	12.0	ft	12.0	ft
Lateral clearance:				
Right edge	6.0	ft	6.0	ft
Left edge	6.0	ft	6.0	ft
Total lateral clearance	12.0	ft	12.0	ft
Access points per mile	1		1	
Median type	Divided		Divided	
Free-flow speed:	Base		Base	
FFS or BFFS	60.0	mph	60.0	mph
Lane width adjustment, FLW	0.0	mph	0.0	mph
Lateral clearance adjustment, FLC	0.0	mph	0.0	mph
Median type adjustment, FM	0.0	mph	0.0	mph
Access points adjustment, FA	0.3	mph	0.3	mph
Free-flow speed	59.8	mph	59.8	mph

VOLUME

Direction	1		2	
Volume, V	680	vph	1030	vph
Peak-hour factor, PHF	0.94		0.94	
Peak 15-minute volume, v15	181		274	
Trucks and buses	10	%	10	%
Recreational vehicles	0	%	0	%
Terrain type	Level		Level	
Grade	0.00	%	0.00	%
Segment length	0.00	mi	0.00	mi
Number of lanes	2		2	
Driver population adjustment, fP	1.00		1.00	
Trucks and buses PCE, ET	1.5		1.5	
Recreational vehicles PCE, ER	1.2		1.2	
Heavy vehicle adjustment, fHV	0.952		0.952	
Flow rate, vp	379	pcphpl	575	pcphpl

RESULTS

Direction	1		2	
Flow rate, vp	379	pcphpl	575	pcphpl
Free-flow speed, FFS	59.8	mph	59.8	mph
Avg. passenger-car travel speed, S	60.0	mph	60.0	mph
Level of service, LOS	A		A	
Density, D	6.3	pc/mi/ln	9.6	pc/mi/ln

Bicycle Level of Service

Posted speed limit, Sp		55
Percent of segment with occupied on-highway parking	0	0
Pavement rating, P	3	3
Flow rate in outside lane, vOL	361.7	547.9
Effective width of outside lane, We	24.00	24.00
Effective speed factor, St	4.79	4.79
Bicycle LOS Score, BLOS	4.93	5.14
Bicycle LOS	E	E

Overall results are not computed when free-flow speed is less than 45 mph.

Phone: Fax:
E-mail:

OPERATIONAL ANALYSIS

Analyst:	ACS
Agency/Co:	Fehr and Peers
Date:	8/21/2014
Analysis Period:	AM Peak Hour
Highway:	STATE ROUTE 138
From/To:	30th St to Route 14
Jurisdiction:	CALTRANS
Analysis Year:	2025 Alt 1
Project ID:	STATE ROUTE 138 HCS ANALYSIS

FREE-FLOW SPEED

Direction	1		2	
Lane width	12.0	ft	12.0	ft
Lateral clearance:				
Right edge	6.0	ft	6.0	ft
Left edge	6.0	ft	6.0	ft
Total lateral clearance	12.0	ft	12.0	ft
Access points per mile	1		1	
Median type	Divided		Divided	
Free-flow speed:	Base		Base	
FFS or BFFS	60.0	mph	60.0	mph
Lane width adjustment, FLW	0.0	mph	0.0	mph
Lateral clearance adjustment, FLC	0.0	mph	0.0	mph
Median type adjustment, FM	0.0	mph	0.0	mph
Access points adjustment, FA	0.3	mph	0.3	mph
Free-flow speed	59.8	mph	59.8	mph

VOLUME

Direction	1		2	
Volume, V	640	vph	750	vph
Peak-hour factor, PHF	0.89		0.89	
Peak 15-minute volume, v15	180		211	
Trucks and buses	10	%	10	%
Recreational vehicles	0	%	0	%
Terrain type	Level		Level	
Grade	0.00	%	0.00	%
Segment length	0.00	mi	0.00	mi
Number of lanes	2		2	
Driver population adjustment, fP	1.00		1.00	
Trucks and buses PCE, ET	1.5		1.5	
Recreational vehicles PCE, ER	1.2		1.2	
Heavy vehicle adjustment, fHV	0.952		0.952	
Flow rate, vp	377	pcphpl	442	pcphpl

RESULTS

Direction	1		2	
Flow rate, vp	377	pcphpl	442	pcphpl
Free-flow speed, FFS	59.8	mph	59.8	mph
Avg. passenger-car travel speed, S	60.0	mph	60.0	mph
Level of service, LOS	A		A	
Density, D	6.3	pc/mi/ln	7.4	pc/mi/ln

Bicycle Level of Service

Posted speed limit, Sp		55
Percent of segment with occupied on-highway parking	0	0
Pavement rating, P	3	3
Flow rate in outside lane, vOL	359.6	421.3
Effective width of outside lane, We	24.00	24.00
Effective speed factor, St	4.79	4.79
Bicycle LOS Score, BLOS	4.92	5.00
Bicycle LOS	E	E

Overall results are not computed when free-flow speed is less than 45 mph.

Phone: Fax:
E-mail:

OPERATIONAL ANALYSIS

Analyst:	ACS
Agency/Co:	Fehr and Peers
Date:	8/21/2014
Analysis Period:	PM Peak Hour
Highway:	STATE ROUTE 138
From/To:	30th St to Route 14
Jurisdiction:	CALTRANS
Analysis Year:	2025 Alt 1
Project ID:	STATE ROUTE 138 HCS ANALYSIS

FREE-FLOW SPEED

Direction	1		2	
Lane width	12.0	ft	12.0	ft
Lateral clearance:				
Right edge	6.0	ft	6.0	ft
Left edge	6.0	ft	6.0	ft
Total lateral clearance	12.0	ft	12.0	ft
Access points per mile	1		1	
Median type	Divided		Divided	
Free-flow speed:	Base		Base	
FFS or BFFS	60.0	mph	60.0	mph
Lane width adjustment, FLW	0.0	mph	0.0	mph
Lateral clearance adjustment, FLC	0.0	mph	0.0	mph
Median type adjustment, FM	0.0	mph	0.0	mph
Access points adjustment, FA	0.3	mph	0.3	mph
Free-flow speed	59.8	mph	59.8	mph

VOLUME

Direction	1		2	
Volume, V	640	vph	900	vph
Peak-hour factor, PHF	0.94		0.94	
Peak 15-minute volume, v15	170		239	
Trucks and buses	10	%	10	%
Recreational vehicles	0	%	0	%
Terrain type	Level		Level	
Grade	0.00	%	0.00	%
Segment length	0.00	mi	0.00	mi
Number of lanes	2		2	
Driver population adjustment, fP	1.00		1.00	
Trucks and buses PCE, ET	1.5		1.5	
Recreational vehicles PCE, ER	1.2		1.2	
Heavy vehicle adjustment, fHV	0.952		0.952	
Flow rate, vp	357	pcphpl	502	pcphpl

RESULTS

Direction	1		2	
Flow rate, vp	357	pcphpl	502	pcphpl
Free-flow speed, FFS	59.8	mph	59.8	mph
Avg. passenger-car travel speed, S	60.0	mph	60.0	mph
Level of service, LOS	A		A	
Density, D	5.9	pc/mi/ln	8.4	pc/mi/ln

Bicycle Level of Service

Posted speed limit, Sp		55
Percent of segment with occupied on-highway parking	0	0
Pavement rating, P	3	3
Flow rate in outside lane, vOL	340.4	478.7
Effective width of outside lane, We	24.00	24.00
Effective speed factor, St	4.79	4.79
Bicycle LOS Score, BLOS	4.90	5.07
Bicycle LOS	E	E

Overall results are not computed when free-flow speed is less than 45 mph.

Phone: Fax:
E-mail:

OPERATIONAL ANALYSIS

Analyst:	ACS
Agency/Co:	Fehr and Peers
Date:	8/21/2014
Analysis Period:	AM Peak Hour
Highway:	STATE ROUTE 138
From/To:	I-5 Connector to 1-Gorman Post
Jurisdiction:	CALTRANS
Analysis Year:	2025 Alt 2
Project ID:	STATE ROUTE 138 HCS ANALYSIS

FREE-FLOW SPEED

Direction	1		2	
Lane width	12.0	ft	12.0	ft
Lateral clearance:				
Right edge	6.0	ft	6.0	ft
Left edge	6.0	ft	6.0	ft
Total lateral clearance	12.0	ft	12.0	ft
Access points per mile	1		1	
Median type	Divided		Divided	
Free-flow speed:	Base		Base	
FFS or BFFS	60.0	mph	60.0	mph
Lane width adjustment, FLW	0.0	mph	0.0	mph
Lateral clearance adjustment, FLC	0.0	mph	0.0	mph
Median type adjustment, FM	0.0	mph	0.0	mph
Access points adjustment, FA	0.3	mph	0.3	mph
Free-flow speed	59.8	mph	59.8	mph

VOLUME

Direction	1		2	
Volume, V	930	vph	1670	vph
Peak-hour factor, PHF	0.87		0.87	
Peak 15-minute volume, v15	267		480	
Trucks and buses	10	%	10	%
Recreational vehicles	0	%	0	%
Terrain type	Level		Level	
Grade	0.00	%	0.00	%
Segment length	0.00	mi	0.00	mi
Number of lanes	3		3	
Driver population adjustment, fP	1.00		1.00	
Trucks and buses PCE, ET	1.5		1.5	
Recreational vehicles PCE, ER	1.2		1.2	
Heavy vehicle adjustment, fHV	0.952		0.952	
Flow rate, vp	374	pcphpl	671	pcphpl

RESULTS

Direction	1		2	
Flow rate, vp	374	pcphpl	671	pcphpl
Free-flow speed, FFS	59.8	mph	59.8	mph
Avg. passenger-car travel speed, S	60.0	mph	60.0	mph
Level of service, LOS	A		B	
Density, D	6.2	pc/mi/ln	11.2	pc/mi/ln

_____ Bicycle Level of Service _____

Posted speed limit, Sp		55
Percent of segment with occupied on-highway parking	0	0
Pavement rating, P	3	3
Flow rate in outside lane, vOL	356.3	639.8
Effective width of outside lane, We	24.00	24.00
Effective speed factor, St	4.79	4.79
Bicycle LOS Score, BLOS	4.92	5.22
Bicycle LOS	E	E

Overall results are not computed when free-flow speed is less than 45 mph.

Phone: Fax:
E-mail:

OPERATIONAL ANALYSIS

Analyst:	ACS
Agency/Co:	Fehr and Peers
Date:	8/21/2014
Analysis Period:	PM Peak Hour
Highway:	STATE ROUTE 138
From/To:	I-5 Connector to 1-Gorman Post
Jurisdiction:	CALTRANS
Analysis Year:	2025 Alt 2
Project ID:	STATE ROUTE 138 HCS ANALYSIS

FREE-FLOW SPEED

Direction	1		2	
Lane width	12.0	ft	12.0	ft
Lateral clearance:				
Right edge	6.0	ft	6.0	ft
Left edge	6.0	ft	6.0	ft
Total lateral clearance	12.0	ft	12.0	ft
Access points per mile	1		1	
Median type	Divided		Divided	
Free-flow speed:	Base		Base	
FFS or BFFS	60.0	mph	60.0	mph
Lane width adjustment, FLW	0.0	mph	0.0	mph
Lateral clearance adjustment, FLC	0.0	mph	0.0	mph
Median type adjustment, FM	0.0	mph	0.0	mph
Access points adjustment, FA	0.3	mph	0.3	mph
Free-flow speed	59.8	mph	59.8	mph

VOLUME

Direction	1		2	
Volume, V	1620	vph	1140	vph
Peak-hour factor, PHF	0.86		0.86	
Peak 15-minute volume, v15	471		331	
Trucks and buses	10	%	10	%
Recreational vehicles	0	%	0	%
Terrain type	Level		Level	
Grade	0.00	%	0.00	%
Segment length	0.00	mi	0.00	mi
Number of lanes	3		3	
Driver population adjustment, fP	1.00		1.00	
Trucks and buses PCE, ET	1.5		1.5	
Recreational vehicles PCE, ER	1.2		1.2	
Heavy vehicle adjustment, fHV	0.952		0.952	
Flow rate, vp	659	pcphpl	463	pcphpl

RESULTS

Direction	1		2	
Flow rate, vp	659	pcphpl	463	pcphpl
Free-flow speed, FFS	59.8	mph	59.8	mph
Avg. passenger-car travel speed, S	60.0	mph	60.0	mph
Level of service, LOS	A		A	
Density, D	11.0-	pc/mi/ln	7.7	pc/mi/ln

_____ Bicycle Level of Service _____

Posted speed limit, Sp		55
Percent of segment with occupied on-highway parking	0	0
Pavement rating, P	3	3
Flow rate in outside lane, vOL	627.9	441.9
Effective width of outside lane, We	24.00	24.00
Effective speed factor, St	4.79	4.79
Bicycle LOS Score, BLOS	5.21	5.03
Bicycle LOS	E	E

Overall results are not computed when free-flow speed is less than 45 mph.

Phone: Fax:
E-mail:

OPERATIONAL ANALYSIS

Analyst:	ACS
Agency/Co:	Fehr and Peers
Date:	8/21/2014
Analysis Period:	AM Peak Hour
Highway:	STATE ROUTE 138
From/To:	Gorman Post to Private Rd
Jurisdiction:	CALTRANS
Analysis Year:	2025 Alt 2
Project ID:	STATE ROUTE 138 HCS ANALYSIS

FREE-FLOW SPEED

Direction	1		2	
Lane width	12.0	ft	12.0	ft
Lateral clearance:				
Right edge	6.0	ft	6.0	ft
Left edge	6.0	ft	6.0	ft
Total lateral clearance	12.0	ft	12.0	ft
Access points per mile	1		1	
Median type	Divided		Divided	
Free-flow speed:	Base		Base	
FFS or BFFS	60.0	mph	60.0	mph
Lane width adjustment, FLW	0.0	mph	0.0	mph
Lateral clearance adjustment, FLC	0.0	mph	0.0	mph
Median type adjustment, FM	0.0	mph	0.0	mph
Access points adjustment, FA	0.3	mph	0.3	mph
Free-flow speed	59.8	mph	59.8	mph

VOLUME

Direction	1		2	
Volume, V	940	vph	1470	vph
Peak-hour factor, PHF	0.79		0.79	
Peak 15-minute volume, v15	297		465	
Trucks and buses	10	%	10	%
Recreational vehicles	0	%	0	%
Terrain type	Level		Level	
Grade	0.00	%	0.00	%
Segment length	0.00	mi	0.00	mi
Number of lanes	3		3	
Driver population adjustment, fP	1.00		1.00	
Trucks and buses PCE, ET	1.5		1.5	
Recreational vehicles PCE, ER	1.2		1.2	
Heavy vehicle adjustment, fHV	0.952		0.952	
Flow rate, vp	416	pcphpl	651	pcphpl

RESULTS

Direction	1		2	
Flow rate, vp	416	pcphpl	651	pcphpl
Free-flow speed, FFS	59.8	mph	59.8	mph
Avg. passenger-car travel speed, S	60.0	mph	60.0	mph
Level of service, LOS	A		A	
Density, D	6.9	pc/mi/ln	10.9	pc/mi/ln

Bicycle Level of Service

Posted speed limit, Sp		55
Percent of segment with occupied on-highway parking	0	0
Pavement rating, P	3	3
Flow rate in outside lane, vOL	396.6	620.3
Effective width of outside lane, We	24.00	24.00
Effective speed factor, St	4.79	4.79
Bicycle LOS Score, BLOS	4.97	5.20
Bicycle LOS	E	E

Overall results are not computed when free-flow speed is less than 45 mph.

Phone: Fax:
E-mail:

OPERATIONAL ANALYSIS

Analyst:	ACS
Agency/Co:	Fehr and Peers
Date:	8/21/2014
Analysis Period:	PM Peak Hour
Highway:	STATE ROUTE 138
From/To:	Gorman Post to Private Rd
Jurisdiction:	CALTRANS
Analysis Year:	2025 Alt 2
Project ID:	STATE ROUTE 138 HCS ANALYSIS

FREE-FLOW SPEED

Direction	1		2	
Lane width	12.0	ft	12.0	ft
Lateral clearance:				
Right edge	6.0	ft	6.0	ft
Left edge	6.0	ft	6.0	ft
Total lateral clearance	12.0	ft	12.0	ft
Access points per mile	1		1	
Median type	Divided		Divided	
Free-flow speed:	Base		Base	
FFS or BFFS	60.0	mph	60.0	mph
Lane width adjustment, FLW	0.0	mph	0.0	mph
Lateral clearance adjustment, FLC	0.0	mph	0.0	mph
Median type adjustment, FM	0.0	mph	0.0	mph
Access points adjustment, FA	0.3	mph	0.3	mph
Free-flow speed	59.8	mph	59.8	mph

VOLUME

Direction	1		2	
Volume, V	1420	vph	1150	vph
Peak-hour factor, PHF	0.90		0.90	
Peak 15-minute volume, v15	394		319	
Trucks and buses	10	%	10	%
Recreational vehicles	0	%	0	%
Terrain type	Level		Level	
Grade	0.00	%	0.00	%
Segment length	0.00	mi	0.00	mi
Number of lanes	3		3	
Driver population adjustment, fP	1.00		1.00	
Trucks and buses PCE, ET	1.5		1.5	
Recreational vehicles PCE, ER	1.2		1.2	
Heavy vehicle adjustment, fHV	0.952		0.952	
Flow rate, vp	552	pcphpl	447	pcphpl

RESULTS

Direction	1		2	
Flow rate, vp	552	pcphpl	447	pcphpl
Free-flow speed, FFS	59.8	mph	59.8	mph
Avg. passenger-car travel speed, S	60.0	mph	60.0	mph
Level of service, LOS	A		A	
Density, D	9.2	pc/mi/ln	7.4	pc/mi/ln

Bicycle Level of Service

Posted speed limit, Sp		55
Percent of segment with occupied on-highway parking	0	0
Pavement rating, P	3	3
Flow rate in outside lane, vOL	525.9	425.9
Effective width of outside lane, We	24.00	24.00
Effective speed factor, St	4.79	4.79
Bicycle LOS Score, BLOS	5.12	5.01
Bicycle LOS	E	E

Overall results are not computed when free-flow speed is less than 45 mph.

Phone: Fax:
E-mail:

OPERATIONAL ANALYSIS

Analyst:	ACS
Agency/Co:	Fehr and Peers
Date:	8/21/2014
Analysis Period:	AM Peak Hour
Highway:	STATE ROUTE 138
From/To:	Private Rd to 300th St
Jurisdiction:	CALTRANS
Analysis Year:	2025 Alt 2
Project ID:	STATE ROUTE 138 HCS ANALYSIS

FREE-FLOW SPEED

Direction	1		2	
Lane width	12.0	ft	12.0	ft
Lateral clearance:				
Right edge	6.0	ft	6.0	ft
Left edge	6.0	ft	6.0	ft
Total lateral clearance	12.0	ft	12.0	ft
Access points per mile	1		1	
Median type	Divided		Divided	
Free-flow speed:	Base		Base	
FFS or BFFS	60.0	mph	60.0	mph
Lane width adjustment, FLW	0.0	mph	0.0	mph
Lateral clearance adjustment, FLC	0.0	mph	0.0	mph
Median type adjustment, FM	0.0	mph	0.0	mph
Access points adjustment, FA	0.3	mph	0.3	mph
Free-flow speed	59.8	mph	59.8	mph

VOLUME

Direction	1		2	
Volume, V	1010	vph	1440	vph
Peak-hour factor, PHF	0.72		0.72	
Peak 15-minute volume, v15	351		500	
Trucks and buses	10	%	10	%
Recreational vehicles	0	%	0	%
Terrain type	Level		Level	
Grade	0.00	%	0.00	%
Segment length	0.00	mi	0.00	mi
Number of lanes	3		3	
Driver population adjustment, fP	1.00		1.00	
Trucks and buses PCE, ET	1.5		1.5	
Recreational vehicles PCE, ER	1.2		1.2	
Heavy vehicle adjustment, fHV	0.952		0.952	
Flow rate, vp	490	pcphpl	699	pcphpl

RESULTS

Direction	1		2	
Flow rate, vp	490	pcphpl	699	pcphpl
Free-flow speed, FFS	59.8	mph	59.8	mph
Avg. passenger-car travel speed, S	60.0	mph	60.0	mph
Level of service, LOS	A		B	
Density, D	8.2	pc/mi/ln	11.6	pc/mi/ln

Bicycle Level of Service

Posted speed limit, Sp		55
Percent of segment with occupied on-highway parking	0	0
Pavement rating, P	3	3
Flow rate in outside lane, vOL	467.6	666.7
Effective width of outside lane, We	24.00	24.00
Effective speed factor, St	4.79	4.79
Bicycle LOS Score, BLOS	5.06	5.24
Bicycle LOS	E	E

Overall results are not computed when free-flow speed is less than 45 mph.

Phone: Fax:
E-mail:

OPERATIONAL ANALYSIS

Analyst:	ACS
Agency/Co:	Fehr and Peers
Date:	8/21/2014
Analysis Period:	PM Peak Hour
Highway:	STATE ROUTE 138
From/To:	Private Rd to 300th St
Jurisdiction:	CALTRANS
Analysis Year:	2025 Alt 2
Project ID:	STATE ROUTE 138 HCS ANALYSIS

FREE-FLOW SPEED

Direction	1		2	
Lane width	12.0	ft	12.0	ft
Lateral clearance:				
Right edge	6.0	ft	6.0	ft
Left edge	6.0	ft	6.0	ft
Total lateral clearance	12.0	ft	12.0	ft
Access points per mile	1		1	
Median type	Divided		Divided	
Free-flow speed:	Base		Base	
FFS or BFFS	60.0	mph	60.0	mph
Lane width adjustment, FLW	0.0	mph	0.0	mph
Lateral clearance adjustment, FLC	0.0	mph	0.0	mph
Median type adjustment, FM	0.0	mph	0.0	mph
Access points adjustment, FA	0.3	mph	0.3	mph
Free-flow speed	59.8	mph	59.8	mph

VOLUME

Direction	1		2	
Volume, V	1360	vph	1270	vph
Peak-hour factor, PHF	0.77		0.77	
Peak 15-minute volume, v15	442		412	
Trucks and buses	10	%	10	%
Recreational vehicles	0	%	0	%
Terrain type	Level		Level	
Grade	0.00	%	0.00	%
Segment length	0.00	mi	0.00	mi
Number of lanes	3		3	
Driver population adjustment, fP	1.00		1.00	
Trucks and buses PCE, ET	1.5		1.5	
Recreational vehicles PCE, ER	1.2		1.2	
Heavy vehicle adjustment, fHV	0.952		0.952	
Flow rate, vp	618	pcphpl	577	pcphpl

RESULTS

Direction	1		2	
Flow rate, vp	618	pcphpl	577	pcphpl
Free-flow speed, FFS	59.8	mph	59.8	mph
Avg. passenger-car travel speed, S	60.0	mph	60.0	mph
Level of service, LOS	A		A	
Density, D	10.3	pc/mi/ln	9.6	pc/mi/ln

Bicycle Level of Service

Posted speed limit, Sp		55
Percent of segment with occupied on-highway parking	0	0
Pavement rating, P	3	3
Flow rate in outside lane, vOL	588.7	549.8
Effective width of outside lane, We	24.00	24.00
Effective speed factor, St	4.79	4.79
Bicycle LOS Score, BLOS	5.17	5.14
Bicycle LOS	E	E

Overall results are not computed when free-flow speed is less than 45 mph.

Phone: Fax:
E-mail:

OPERATIONAL ANALYSIS

Analyst:	ACS
Agency/Co:	Fehr and Peers
Date:	8/21/2014
Analysis Period:	AM Peak Hour
Highway:	STATE ROUTE 138
From/To:	280th St to 270th St
Jurisdiction:	CALTRANS
Analysis Year:	2025 Alt 2
Project ID:	STATE ROUTE 138 HCS ANALYSIS

FREE-FLOW SPEED

Direction	1		2	
Lane width	12.0	ft	12.0	ft
Lateral clearance:				
Right edge	6.0	ft	6.0	ft
Left edge	6.0	ft	6.0	ft
Total lateral clearance	12.0	ft	12.0	ft
Access points per mile	1		1	
Median type	Divided		Divided	
Free-flow speed:	Base		Base	
FFS or BFFS	60.0	mph	60.0	mph
Lane width adjustment, FLW	0.0	mph	0.0	mph
Lateral clearance adjustment, FLC	0.0	mph	0.0	mph
Median type adjustment, FM	0.0	mph	0.0	mph
Access points adjustment, FA	0.3	mph	0.3	mph
Free-flow speed	59.8	mph	59.8	mph

VOLUME

Direction	1		2	
Volume, V	890	vph	1090	vph
Peak-hour factor, PHF	0.97		0.97	
Peak 15-minute volume, v15	229		281	
Trucks and buses	10	%	10	%
Recreational vehicles	0	%	0	%
Terrain type	Level		Level	
Grade	0.00	%	0.00	%
Segment length	0.00	mi	0.00	mi
Number of lanes	2		2	
Driver population adjustment, fP	1.00		1.00	
Trucks and buses PCE, ET	1.5		1.5	
Recreational vehicles PCE, ER	1.2		1.2	
Heavy vehicle adjustment, fHV	0.952		0.952	
Flow rate, vp	481	pcphpl	589	pcphpl

RESULTS

Direction	1		2	
Flow rate, vp	481	pcphpl	589	pcphpl
Free-flow speed, FFS	59.8	mph	59.8	mph
Avg. passenger-car travel speed, S	60.0	mph	60.0	mph
Level of service, LOS	A		A	
Density, D	8.0	pc/mi/ln	9.8	pc/mi/ln

Bicycle Level of Service

Posted speed limit, Sp		55
Percent of segment with occupied on-highway parking	0	0
Pavement rating, P	3	3
Flow rate in outside lane, vOL	458.8	561.9
Effective width of outside lane, We	24.00	24.00
Effective speed factor, St	4.79	4.79
Bicycle LOS Score, BLOS	5.05	5.15
Bicycle LOS	E	E

Overall results are not computed when free-flow speed is less than 45 mph.

Phone: Fax:
E-mail:

OPERATIONAL ANALYSIS

Analyst:	ACS
Agency/Co:	Fehr and Peers
Date:	8/21/2014
Analysis Period:	PM Peak Hour
Highway:	STATE ROUTE 138
From/To:	280th St to 270th St
Jurisdiction:	CALTRANS
Analysis Year:	2025 Alt 2
Project ID:	STATE ROUTE 138 HCS ANALYSIS

FREE-FLOW SPEED

Direction	1		2	
Lane width	12.0	ft	12.0	ft
Lateral clearance:				
Right edge	6.0	ft	6.0	ft
Left edge	6.0	ft	6.0	ft
Total lateral clearance	12.0	ft	12.0	ft
Access points per mile	1		1	
Median type	Divided		Divided	
Free-flow speed:	Base		Base	
FFS or BFFS	60.0	mph	60.0	mph
Lane width adjustment, FLW	0.0	mph	0.0	mph
Lateral clearance adjustment, FLC	0.0	mph	0.0	mph
Median type adjustment, FM	0.0	mph	0.0	mph
Access points adjustment, FA	0.3	mph	0.3	mph
Free-flow speed	59.8	mph	59.8	mph

VOLUME

Direction	1		2	
Volume, V	860	vph	1120	vph
Peak-hour factor, PHF	0.90		0.90	
Peak 15-minute volume, v15	239		311	
Trucks and buses	10	%	10	%
Recreational vehicles	0	%	0	%
Terrain type	Level		Level	
Grade	0.00	%	0.00	%
Segment length	0.00	mi	0.00	mi
Number of lanes	2		2	
Driver population adjustment, fP	1.00		1.00	
Trucks and buses PCE, ET	1.5		1.5	
Recreational vehicles PCE, ER	1.2		1.2	
Heavy vehicle adjustment, fHV	0.952		0.952	
Flow rate, vp	501	pcphpl	653	pcphpl

RESULTS

Direction	1		2	
Flow rate, vp	501	pcphpl	653	pcphpl
Free-flow speed, FFS	59.8	mph	59.8	mph
Avg. passenger-car travel speed, S	60.0	mph	60.0	mph
Level of service, LOS	A		A	
Density, D	8.4	pc/mi/ln	10.9	pc/mi/ln

Bicycle Level of Service

Posted speed limit, Sp		55
Percent of segment with occupied on-highway parking	0	0
Pavement rating, P	3	3
Flow rate in outside lane, vOL	477.8	622.2
Effective width of outside lane, We	24.00	24.00
Effective speed factor, St	4.79	4.79
Bicycle LOS Score, BLOS	5.07	5.20
Bicycle LOS	E	E

Overall results are not computed when free-flow speed is less than 45 mph.

Phone: Fax:
E-mail:

OPERATIONAL ANALYSIS

Analyst:	ACS
Agency/Co:	Fehr and Peers
Date:	8/21/2014
Analysis Period:	AM Peak Hour
Highway:	STATE ROUTE 138
From/To:	Three Points Rd to 245th St
Jurisdiction:	CALTRANS
Analysis Year:	2025 Alt 2
Project ID:	STATE ROUTE 138 HCS ANALYSIS

FREE-FLOW SPEED

Direction	1		2	
Lane width	12.0	ft	12.0	ft
Lateral clearance:				
Right edge	6.0	ft	6.0	ft
Left edge	6.0	ft	6.0	ft
Total lateral clearance	12.0	ft	12.0	ft
Access points per mile	1		1	
Median type	Divided		Divided	
Free-flow speed:	Base		Base	
FFS or BFFS	60.0	mph	60.0	mph
Lane width adjustment, FLW	0.0	mph	0.0	mph
Lateral clearance adjustment, FLC	0.0	mph	0.0	mph
Median type adjustment, FM	0.0	mph	0.0	mph
Access points adjustment, FA	0.3	mph	0.3	mph
Free-flow speed	59.8	mph	59.8	mph

VOLUME

Direction	1		2	
Volume, V	890	vph	1090	vph
Peak-hour factor, PHF	0.79		0.79	
Peak 15-minute volume, v15	282		345	
Trucks and buses	10	%	10	%
Recreational vehicles	0	%	0	%
Terrain type	Level		Level	
Grade	0.00	%	0.00	%
Segment length	0.00	mi	0.00	mi
Number of lanes	2		2	
Driver population adjustment, fP	1.00		1.00	
Trucks and buses PCE, ET	1.5		1.5	
Recreational vehicles PCE, ER	1.2		1.2	
Heavy vehicle adjustment, fHV	0.952		0.952	
Flow rate, vp	591	pcphpl	724	pcphpl

RESULTS

Direction	1		2	
Flow rate, vp	591	pcphpl	724	pcphpl
Free-flow speed, FFS	59.8	mph	59.8	mph
Avg. passenger-car travel speed, S	60.0	mph	60.0	mph
Level of service, LOS	A		B	
Density, D	9.9	pc/mi/ln	12.1	pc/mi/ln

Bicycle Level of Service

Posted speed limit, Sp		55
Percent of segment with occupied on-highway parking	0	0
Pavement rating, P	3	3
Flow rate in outside lane, vOL	563.3	689.9
Effective width of outside lane, We	24.00	24.00
Effective speed factor, St	4.79	4.79
Bicycle LOS Score, BLOS	5.15	5.25
Bicycle LOS	E	E

Overall results are not computed when free-flow speed is less than 45 mph.

Phone: Fax:
E-mail:

OPERATIONAL ANALYSIS

Analyst:	ACS
Agency/Co:	Fehr and Peers
Date:	8/21/2014
Analysis Period:	PM Peak Hour
Highway:	STATE ROUTE 138
From/To:	Three Points Rd to 245th St
Jurisdiction:	CALTRANS
Analysis Year:	2025 Alt 2
Project ID:	STATE ROUTE 138 HCS ANALYSIS

FREE-FLOW SPEED

Direction	1		2	
Lane width	12.0	ft	12.0	ft
Lateral clearance:				
Right edge	6.0	ft	6.0	ft
Left edge	6.0	ft	6.0	ft
Total lateral clearance	12.0	ft	12.0	ft
Access points per mile	1		1	
Median type	Divided		Divided	
Free-flow speed:	Base		Base	
FFS or BFFS	60.0	mph	60.0	mph
Lane width adjustment, FLW	0.0	mph	0.0	mph
Lateral clearance adjustment, FLC	0.0	mph	0.0	mph
Median type adjustment, FM	0.0	mph	0.0	mph
Access points adjustment, FA	0.3	mph	0.3	mph
Free-flow speed	59.8	mph	59.8	mph

VOLUME

Direction	1		2	
Volume, V	860	vph	1120	vph
Peak-hour factor, PHF	0.89		0.89	
Peak 15-minute volume, v15	242		315	
Trucks and buses	10	%	10	%
Recreational vehicles	0	%	0	%
Terrain type	Level		Level	
Grade	0.00	%	0.00	%
Segment length	0.00	mi	0.00	mi
Number of lanes	2		2	
Driver population adjustment, fP	1.00		1.00	
Trucks and buses PCE, ET	1.5		1.5	
Recreational vehicles PCE, ER	1.2		1.2	
Heavy vehicle adjustment, fHV	0.952		0.952	
Flow rate, vp	507	pcphpl	660	pcphpl

RESULTS

Direction	1		2	
Flow rate, vp	507	pcphpl	660	pcphpl
Free-flow speed, FFS	59.8	mph	59.8	mph
Avg. passenger-car travel speed, S	60.0	mph	60.0	mph
Level of service, LOS	A		A	
Density, D	8.4	pc/mi/ln	11.0	pc/mi/ln

Bicycle Level of Service

Posted speed limit, Sp		55
Percent of segment with occupied on-highway parking	0	0
Pavement rating, P	3	3
Flow rate in outside lane, vOL	483.1	629.2
Effective width of outside lane, We	24.00	24.00
Effective speed factor, St	4.79	4.79
Bicycle LOS Score, BLOS	5.07	5.21
Bicycle LOS	E	E

Overall results are not computed when free-flow speed is less than 45 mph.

Phone: Fax:
E-mail:

OPERATIONAL ANALYSIS

Analyst:	ACS
Agency/Co:	Fehr and Peers
Date:	8/21/2014
Analysis Period:	AM Peak Hour
Highway:	STATE ROUTE 138
From/To:	230th St to 190th St
Jurisdiction:	CALTRANS
Analysis Year:	2025 Alt 2
Project ID:	STATE ROUTE 138 HCS ANALYSIS

FREE-FLOW SPEED

Direction	1		2	
Lane width	12.0	ft	12.0	ft
Lateral clearance:				
Right edge	6.0	ft	6.0	ft
Left edge	6.0	ft	6.0	ft
Total lateral clearance	12.0	ft	12.0	ft
Access points per mile	1		1	
Median type	Divided		Divided	
Free-flow speed:	Base		Base	
FFS or BFFS	60.0	mph	60.0	mph
Lane width adjustment, FLW	0.0	mph	0.0	mph
Lateral clearance adjustment, FLC	0.0	mph	0.0	mph
Median type adjustment, FM	0.0	mph	0.0	mph
Access points adjustment, FA	0.3	mph	0.3	mph
Free-flow speed	59.8	mph	59.8	mph

VOLUME

Direction	1		2	
Volume, V	800	vph	1020	vph
Peak-hour factor, PHF	0.82		0.82	
Peak 15-minute volume, v15	244		311	
Trucks and buses	10	%	10	%
Recreational vehicles	0	%	0	%
Terrain type	Level		Level	
Grade	0.00	%	0.00	%
Segment length	0.00	mi	0.00	mi
Number of lanes	2		2	
Driver population adjustment, fP	1.00		1.00	
Trucks and buses PCE, ET	1.5		1.5	
Recreational vehicles PCE, ER	1.2		1.2	
Heavy vehicle adjustment, fHV	0.952		0.952	
Flow rate, vp	512	pcphpl	653	pcphpl

RESULTS

Direction	1		2	
Flow rate, vp	512	pcphpl	653	pcphpl
Free-flow speed, FFS	59.8	mph	59.8	mph
Avg. passenger-car travel speed, S	60.0	mph	60.0	mph
Level of service, LOS	A		A	
Density, D	8.5	pc/mi/ln	10.9	pc/mi/ln

Bicycle Level of Service

Posted speed limit, Sp		55
Percent of segment with occupied on-highway parking	0	0
Pavement rating, P	3	3
Flow rate in outside lane, vOL	487.8	622.0
Effective width of outside lane, We	24.00	24.00
Effective speed factor, St	4.79	4.79
Bicycle LOS Score, BLOS	5.08	5.20
Bicycle LOS	E	E

Overall results are not computed when free-flow speed is less than 45 mph.

Phone: Fax:
E-mail:

OPERATIONAL ANALYSIS

Analyst:	ACS
Agency/Co:	Fehr and Peers
Date:	8/21/2014
Analysis Period:	PM Peak Hour
Highway:	STATE ROUTE 138
From/To:	230th St to 190th St
Jurisdiction:	CALTRANS
Analysis Year:	2025 Alt 2
Project ID:	STATE ROUTE 138 HCS ANALYSIS

FREE-FLOW SPEED

Direction	1		2	
Lane width	12.0	ft	12.0	ft
Lateral clearance:				
Right edge	6.0	ft	6.0	ft
Left edge	6.0	ft	6.0	ft
Total lateral clearance	12.0	ft	12.0	ft
Access points per mile	1		1	
Median type	Divided		Divided	
Free-flow speed:	Base		Base	
FFS or BFFS	60.0	mph	60.0	mph
Lane width adjustment, FLW	0.0	mph	0.0	mph
Lateral clearance adjustment, FLC	0.0	mph	0.0	mph
Median type adjustment, FM	0.0	mph	0.0	mph
Access points adjustment, FA	0.3	mph	0.3	mph
Free-flow speed	59.8	mph	59.8	mph

VOLUME

Direction	1		2	
Volume, V	880	vph	1080	vph
Peak-hour factor, PHF	0.88		0.88	
Peak 15-minute volume, v15	250		307	
Trucks and buses	10	%	10	%
Recreational vehicles	0	%	0	%
Terrain type	Level		Level	
Grade	0.00	%	0.00	%
Segment length	0.00	mi	0.00	mi
Number of lanes	2		2	
Driver population adjustment, fP	1.00		1.00	
Trucks and buses PCE, ET	1.5		1.5	
Recreational vehicles PCE, ER	1.2		1.2	
Heavy vehicle adjustment, fHV	0.952		0.952	
Flow rate, vp	525	pcphpl	644	pcphpl

RESULTS

Direction	1		2	
Flow rate, vp	525	pcphpl	644	pcphpl
Free-flow speed, FFS	59.8	mph	59.8	mph
Avg. passenger-car travel speed, S	60.0	mph	60.0	mph
Level of service, LOS	A		A	
Density, D	8.8	pc/mi/ln	10.7	pc/mi/ln

Bicycle Level of Service

Posted speed limit, Sp		55
Percent of segment with occupied on-highway parking	0	0
Pavement rating, P	3	3
Flow rate in outside lane, vOL	500.0	613.6
Effective width of outside lane, We	24.00	24.00
Effective speed factor, St	4.79	4.79
Bicycle LOS Score, BLOS	5.09	5.20
Bicycle LOS	E	E

Overall results are not computed when free-flow speed is less than 45 mph.

Phone: Fax:
E-mail:

OPERATIONAL ANALYSIS

Analyst:	ACS
Agency/Co:	Fehr and Peers
Date:	8/21/2014
Analysis Period:	AM Peak Hour
Highway:	STATE ROUTE 138
From/To:	190th St to 130th St
Jurisdiction:	CALTRANS
Analysis Year:	2025 Alt 2
Project ID:	STATE ROUTE 138 HCS ANALYSIS

FREE-FLOW SPEED

Direction	1		2	
Lane width	12.0	ft	12.0	ft
Lateral clearance:				
Right edge	6.0	ft	6.0	ft
Left edge	6.0	ft	6.0	ft
Total lateral clearance	12.0	ft	12.0	ft
Access points per mile	1		1	
Median type	Divided		Divided	
Free-flow speed:	Base		Base	
FFS or BFFS	60.0	mph	60.0	mph
Lane width adjustment, FLW	0.0	mph	0.0	mph
Lateral clearance adjustment, FLC	0.0	mph	0.0	mph
Median type adjustment, FM	0.0	mph	0.0	mph
Access points adjustment, FA	0.3	mph	0.3	mph
Free-flow speed	59.8	mph	59.8	mph

VOLUME

Direction	1		2	
Volume, V	640	vph	980	vph
Peak-hour factor, PHF	0.72		0.72	
Peak 15-minute volume, v15	222		340	
Trucks and buses	10	%	10	%
Recreational vehicles	0	%	0	%
Terrain type	Level		Level	
Grade	0.00	%	0.00	%
Segment length	0.00	mi	0.00	mi
Number of lanes	2		2	
Driver population adjustment, fP	1.00		1.00	
Trucks and buses PCE, ET	1.5		1.5	
Recreational vehicles PCE, ER	1.2		1.2	
Heavy vehicle adjustment, fHV	0.952		0.952	
Flow rate, vp	466	pcphpl	714	pcphpl

RESULTS

Direction	1		2	
Flow rate, vp	466	pcphpl	714	pcphpl
Free-flow speed, FFS	59.8	mph	59.8	mph
Avg. passenger-car travel speed, S	60.0	mph	60.0	mph
Level of service, LOS	A		B	
Density, D	7.8	pc/mi/ln	11.9	pc/mi/ln

Bicycle Level of Service

Posted speed limit, Sp		55
Percent of segment with occupied on-highway parking	0	0
Pavement rating, P	3	3
Flow rate in outside lane, vOL	444.4	680.6
Effective width of outside lane, We	24.00	24.00
Effective speed factor, St	4.79	4.79
Bicycle LOS Score, BLOS	5.03	5.25
Bicycle LOS	E	E

Overall results are not computed when free-flow speed is less than 45 mph.

Phone: Fax:
E-mail:

OPERATIONAL ANALYSIS

Analyst:	ACS
Agency/Co:	Fehr and Peers
Date:	8/21/2014
Analysis Period:	PM Peak Hour
Highway:	STATE ROUTE 138
From/To:	190th St to 130th St
Jurisdiction:	CALTRANS
Analysis Year:	2025 Alt 2
Project ID:	STATE ROUTE 138 HCS ANALYSIS

FREE-FLOW SPEED

Direction	1		2	
Lane width	12.0	ft	12.0	ft
Lateral clearance:				
Right edge	6.0	ft	6.0	ft
Left edge	6.0	ft	6.0	ft
Total lateral clearance	12.0	ft	12.0	ft
Access points per mile	1		1	
Median type	Divided		Divided	
Free-flow speed:	Base		Base	
FFS or BFFS	60.0	mph	60.0	mph
Lane width adjustment, FLW	0.0	mph	0.0	mph
Lateral clearance adjustment, FLC	0.0	mph	0.0	mph
Median type adjustment, FM	0.0	mph	0.0	mph
Access points adjustment, FA	0.3	mph	0.3	mph
Free-flow speed	59.8	mph	59.8	mph

VOLUME

Direction	1		2	
Volume, V	740	vph	1020	vph
Peak-hour factor, PHF	0.89		0.89	
Peak 15-minute volume, v15	208		287	
Trucks and buses	10	%	10	%
Recreational vehicles	0	%	0	%
Terrain type	Level		Level	
Grade	0.00	%	0.00	%
Segment length	0.00	mi	0.00	mi
Number of lanes	2		2	
Driver population adjustment, fP	1.00		1.00	
Trucks and buses PCE, ET	1.5		1.5	
Recreational vehicles PCE, ER	1.2		1.2	
Heavy vehicle adjustment, fHV	0.952		0.952	
Flow rate, vp	436	pcphpl	601	pcphpl

RESULTS

Direction	1		2	
Flow rate, vp	436	pcphpl	601	pcphpl
Free-flow speed, FFS	59.8	mph	59.8	mph
Avg. passenger-car travel speed, S	60.0	mph	60.0	mph
Level of service, LOS	A		A	
Density, D	7.3	pc/mi/ln	10.0	pc/mi/ln

Bicycle Level of Service

Posted speed limit, Sp		55
Percent of segment with occupied on-highway parking	0	0
Pavement rating, P	3	3
Flow rate in outside lane, vOL	415.7	573.0
Effective width of outside lane, We	24.00	24.00
Effective speed factor, St	4.79	4.79
Bicycle LOS Score, BLOS	5.00	5.16
Bicycle LOS	E	E

Overall results are not computed when free-flow speed is less than 45 mph.

Phone: Fax:
E-mail:

OPERATIONAL ANALYSIS

Analyst:	ACS
Agency/Co:	Fehr and Peers
Date:	8/21/2014
Analysis Period:	AM Peak Hour
Highway:	STATE ROUTE 138
From/To:	130th St to 80th St
Jurisdiction:	CALTRANS
Analysis Year:	2025 Alt 2
Project ID:	STATE ROUTE 138 HCS ANALYSIS

FREE-FLOW SPEED

Direction	1		2	
Lane width	12.0	ft	12.0	ft
Lateral clearance:				
Right edge	6.0	ft	6.0	ft
Left edge	6.0	ft	6.0	ft
Total lateral clearance	12.0	ft	12.0	ft
Access points per mile	1		1	
Median type	Divided		Divided	
Free-flow speed:	Base		Base	
FFS or BFFS	60.0	mph	60.0	mph
Lane width adjustment, FLW	0.0	mph	0.0	mph
Lateral clearance adjustment, FLC	0.0	mph	0.0	mph
Median type adjustment, FM	0.0	mph	0.0	mph
Access points adjustment, FA	0.3	mph	0.3	mph
Free-flow speed	59.8	mph	59.8	mph

VOLUME

Direction	1		2	
Volume, V	690	vph	860	vph
Peak-hour factor, PHF	0.85		0.85	
Peak 15-minute volume, v15	203		253	
Trucks and buses	10	%	10	%
Recreational vehicles	0	%	0	%
Terrain type	Level		Level	
Grade	0.00	%	0.00	%
Segment length	0.00	mi	0.00	mi
Number of lanes	2		2	
Driver population adjustment, fP	1.00		1.00	
Trucks and buses PCE, ET	1.5		1.5	
Recreational vehicles PCE, ER	1.2		1.2	
Heavy vehicle adjustment, fHV	0.952		0.952	
Flow rate, vp	426	pcphpl	531	pcphpl

RESULTS

Direction	1		2	
Flow rate, vp	426	pcphpl	531	pcphpl
Free-flow speed, FFS	59.8	mph	59.8	mph
Avg. passenger-car travel speed, S	60.0	mph	60.0	mph
Level of service, LOS	A		A	
Density, D	7.1	pc/mi/ln	8.9	pc/mi/ln

Bicycle Level of Service

Posted speed limit, Sp		55
Percent of segment with occupied on-highway parking	0	0
Pavement rating, P	3	3
Flow rate in outside lane, vOL	405.9	505.9
Effective width of outside lane, We	24.00	24.00
Effective speed factor, St	4.79	4.79
Bicycle LOS Score, BLOS	4.99	5.10
Bicycle LOS	E	E

Overall results are not computed when free-flow speed is less than 45 mph.

Phone: Fax:
E-mail:

OPERATIONAL ANALYSIS

Analyst:	ACS
Agency/Co:	Fehr and Peers
Date:	8/21/2014
Analysis Period:	PM Peak Hour
Highway:	STATE ROUTE 138
From/To:	130th St to 80th St
Jurisdiction:	CALTRANS
Analysis Year:	2025 Alt 2
Project ID:	STATE ROUTE 138 HCS ANALYSIS

FREE-FLOW SPEED

Direction	1		2	
Lane width	12.0	ft	12.0	ft
Lateral clearance:				
Right edge	6.0	ft	6.0	ft
Left edge	6.0	ft	6.0	ft
Total lateral clearance	12.0	ft	12.0	ft
Access points per mile	1		1	
Median type	Divided		Divided	
Free-flow speed:	Base		Base	
FFS or BFFS	60.0	mph	60.0	mph
Lane width adjustment, FLW	0.0	mph	0.0	mph
Lateral clearance adjustment, FLC	0.0	mph	0.0	mph
Median type adjustment, FM	0.0	mph	0.0	mph
Access points adjustment, FA	0.3	mph	0.3	mph
Free-flow speed	59.8	mph	59.8	mph

VOLUME

Direction	1		2	
Volume, V	680	vph	910	vph
Peak-hour factor, PHF	0.91		0.91	
Peak 15-minute volume, v15	187		250	
Trucks and buses	10	%	10	%
Recreational vehicles	0	%	0	%
Terrain type	Level		Level	
Grade	0.00	%	0.00	%
Segment length	0.00	mi	0.00	mi
Number of lanes	2		2	
Driver population adjustment, fP	1.00		1.00	
Trucks and buses PCE, ET	1.5		1.5	
Recreational vehicles PCE, ER	1.2		1.2	
Heavy vehicle adjustment, fHV	0.952		0.952	
Flow rate, vp	392	pcphpl	524	pcphpl

RESULTS

Direction	1		2	
Flow rate, vp	392	pcphpl	524	pcphpl
Free-flow speed, FFS	59.8	mph	59.8	mph
Avg. passenger-car travel speed, S	60.0	mph	60.0	mph
Level of service, LOS	A		A	
Density, D	6.5	pc/mi/ln	8.7	pc/mi/ln

Bicycle Level of Service

Posted speed limit, Sp		55
Percent of segment with occupied on-highway parking	0	0
Pavement rating, P	3	3
Flow rate in outside lane, vOL	373.6	500.0
Effective width of outside lane, We	24.00	24.00
Effective speed factor, St	4.79	4.79
Bicycle LOS Score, BLOS	4.94	5.09
Bicycle LOS	E	E

Overall results are not computed when free-flow speed is less than 45 mph.

Phone: Fax:
E-mail:

OPERATIONAL ANALYSIS

Analyst:	ACS
Agency/Co:	Fehr and Peers
Date:	8/21/2014
Analysis Period:	AM Peak Hour
Highway:	STATE ROUTE 138
From/To:	80th St to 30th St
Jurisdiction:	CALTRANS
Analysis Year:	2025 Alt 2
Project ID:	STATE ROUTE 138 HCS ANALYSIS

FREE-FLOW SPEED

Direction	1		2	
Lane width	12.0	ft	12.0	ft
Lateral clearance:				
Right edge	6.0	ft	6.0	ft
Left edge	6.0	ft	6.0	ft
Total lateral clearance	12.0	ft	12.0	ft
Access points per mile	1		1	
Median type	Divided		Divided	
Free-flow speed:	Base		Base	
FFS or BFFS	60.0	mph	60.0	mph
Lane width adjustment, FLW	0.0	mph	0.0	mph
Lateral clearance adjustment, FLC	0.0	mph	0.0	mph
Median type adjustment, FM	0.0	mph	0.0	mph
Access points adjustment, FA	0.3	mph	0.3	mph
Free-flow speed	59.8	mph	59.8	mph

VOLUME

Direction	1		2	
Volume, V	610	vph	820	vph
Peak-hour factor, PHF	0.94		0.94	
Peak 15-minute volume, v15	162		218	
Trucks and buses	10	%	10	%
Recreational vehicles	0	%	0	%
Terrain type	Level		Level	
Grade	0.00	%	0.00	%
Segment length	0.00	mi	0.00	mi
Number of lanes	2		2	
Driver population adjustment, fP	1.00		1.00	
Trucks and buses PCE, ET	1.5		1.5	
Recreational vehicles PCE, ER	1.2		1.2	
Heavy vehicle adjustment, fHV	0.952		0.952	
Flow rate, vp	340	pcphpl	457	pcphpl

RESULTS

Direction	1		2	
Flow rate, vp	340	pcphpl	457	pcphpl
Free-flow speed, FFS	59.8	mph	59.8	mph
Avg. passenger-car travel speed, S	60.0	mph	60.0	mph
Level of service, LOS	A		A	
Density, D	5.7	pc/mi/ln	7.6	pc/mi/ln

Bicycle Level of Service

Posted speed limit, Sp		55
Percent of segment with occupied on-highway parking	0	0
Pavement rating, P	3	3
Flow rate in outside lane, vOL	324.5	436.2
Effective width of outside lane, We	24.00	24.00
Effective speed factor, St	4.79	4.79
Bicycle LOS Score, BLOS	4.87	5.02
Bicycle LOS	E	E

Overall results are not computed when free-flow speed is less than 45 mph.

Phone: Fax:
E-mail:

OPERATIONAL ANALYSIS

Analyst:	ACS
Agency/Co:	Fehr and Peers
Date:	8/21/2014
Analysis Period:	PM Peak Hour
Highway:	STATE ROUTE 138
From/To:	80th St to 30th St
Jurisdiction:	CALTRANS
Analysis Year:	2025 Alt 2
Project ID:	STATE ROUTE 138 HCS ANALYSIS

FREE-FLOW SPEED

Direction	1		2	
Lane width	12.0	ft	12.0	ft
Lateral clearance:				
Right edge	6.0	ft	6.0	ft
Left edge	6.0	ft	6.0	ft
Total lateral clearance	12.0	ft	12.0	ft
Access points per mile	1		1	
Median type	Divided		Divided	
Free-flow speed:	Base		Base	
FFS or BFFS	60.0	mph	60.0	mph
Lane width adjustment, FLW	0.0	mph	0.0	mph
Lateral clearance adjustment, FLC	0.0	mph	0.0	mph
Median type adjustment, FM	0.0	mph	0.0	mph
Access points adjustment, FA	0.3	mph	0.3	mph
Free-flow speed	59.8	mph	59.8	mph

VOLUME

Direction	1		2	
Volume, V	640	vph	930	vph
Peak-hour factor, PHF	0.94		0.94	
Peak 15-minute volume, v15	170		247	
Trucks and buses	10	%	10	%
Recreational vehicles	0	%	0	%
Terrain type	Level		Level	
Grade	0.00	%	0.00	%
Segment length	0.00	mi	0.00	mi
Number of lanes	2		2	
Driver population adjustment, fP	1.00		1.00	
Trucks and buses PCE, ET	1.5		1.5	
Recreational vehicles PCE, ER	1.2		1.2	
Heavy vehicle adjustment, fHV	0.952		0.952	
Flow rate, vp	357	pcphpl	519	pcphpl

RESULTS

Direction	1		2	
Flow rate, vp	357	pcphpl	519	pcphpl
Free-flow speed, FFS	59.8	mph	59.8	mph
Avg. passenger-car travel speed, S	60.0	mph	60.0	mph
Level of service, LOS	A		A	
Density, D	5.9	pc/mi/ln	8.6	pc/mi/ln

Bicycle Level of Service

Posted speed limit, Sp		55
Percent of segment with occupied on-highway parking	0	0
Pavement rating, P	3	3
Flow rate in outside lane, vOL	340.4	494.7
Effective width of outside lane, We	24.00	24.00
Effective speed factor, St	4.79	4.79
Bicycle LOS Score, BLOS	4.90	5.09
Bicycle LOS	E	E

Overall results are not computed when free-flow speed is less than 45 mph.

Phone: Fax:
E-mail:

OPERATIONAL ANALYSIS

Analyst:	ACS
Agency/Co:	Fehr and Peers
Date:	8/21/2014
Analysis Period:	AM Peak Hour
Highway:	STATE ROUTE 138
From/To:	30th St to Route 14
Jurisdiction:	CALTRANS
Analysis Year:	2025 Alt 2
Project ID:	STATE ROUTE 138 HCS ANALYSIS

FREE-FLOW SPEED

Direction	1		2	
Lane width	12.0	ft	12.0	ft
Lateral clearance:				
Right edge	6.0	ft	6.0	ft
Left edge	6.0	ft	6.0	ft
Total lateral clearance	12.0	ft	12.0	ft
Access points per mile	1		1	
Median type	Divided		Divided	
Free-flow speed:	Base		Base	
FFS or BFFS	60.0	mph	60.0	mph
Lane width adjustment, FLW	0.0	mph	0.0	mph
Lateral clearance adjustment, FLC	0.0	mph	0.0	mph
Median type adjustment, FM	0.0	mph	0.0	mph
Access points adjustment, FA	0.3	mph	0.3	mph
Free-flow speed	59.8	mph	59.8	mph

VOLUME

Direction	1		2	
Volume, V	590	vph	730	vph
Peak-hour factor, PHF	0.89		0.89	
Peak 15-minute volume, v15	166		205	
Trucks and buses	10	%	10	%
Recreational vehicles	0	%	0	%
Terrain type	Level		Level	
Grade	0.00	%	0.00	%
Segment length	0.00	mi	0.00	mi
Number of lanes	2		2	
Driver population adjustment, fP	1.00		1.00	
Trucks and buses PCE, ET	1.5		1.5	
Recreational vehicles PCE, ER	1.2		1.2	
Heavy vehicle adjustment, fHV	0.952		0.952	
Flow rate, vp	348	pcphpl	430	pcphpl

RESULTS

Direction	1		2	
Flow rate, vp	348	pcphpl	430	pcphpl
Free-flow speed, FFS	59.8	mph	59.8	mph
Avg. passenger-car travel speed, S	60.0	mph	60.0	mph
Level of service, LOS	A		A	
Density, D	5.8	pc/mi/ln	7.2	pc/mi/ln

Bicycle Level of Service

Posted speed limit, Sp		55
Percent of segment with occupied on-highway parking	0	0
Pavement rating, P	3	3
Flow rate in outside lane, vOL	331.5	410.1
Effective width of outside lane, We	24.00	24.00
Effective speed factor, St	4.79	4.79
Bicycle LOS Score, BLOS	4.88	4.99
Bicycle LOS	E	E

Overall results are not computed when free-flow speed is less than 45 mph.

Phone: Fax:
E-mail:

OPERATIONAL ANALYSIS

Analyst:	ACS
Agency/Co:	Fehr and Peers
Date:	8/21/2014
Analysis Period:	PM Peak Hour
Highway:	STATE ROUTE 138
From/To:	30th St to Route 14
Jurisdiction:	CALTRANS
Analysis Year:	2025 Alt 2
Project ID:	STATE ROUTE 138 HCS ANALYSIS

FREE-FLOW SPEED

Direction	1		2	
Lane width	12.0	ft	12.0	ft
Lateral clearance:				
Right edge	6.0	ft	6.0	ft
Left edge	6.0	ft	6.0	ft
Total lateral clearance	12.0	ft	12.0	ft
Access points per mile	1		1	
Median type	Divided		Divided	
Free-flow speed:	Base		Base	
FFS or BFFS	60.0	mph	60.0	mph
Lane width adjustment, FLW	0.0	mph	0.0	mph
Lateral clearance adjustment, FLC	0.0	mph	0.0	mph
Median type adjustment, FM	0.0	mph	0.0	mph
Access points adjustment, FA	0.3	mph	0.3	mph
Free-flow speed	59.8	mph	59.8	mph

VOLUME

Direction	1		2	
Volume, V	580	vph	830	vph
Peak-hour factor, PHF	0.94		0.94	
Peak 15-minute volume, v15	154		221	
Trucks and buses	10	%	10	%
Recreational vehicles	0	%	0	%
Terrain type	Level		Level	
Grade	0.00	%	0.00	%
Segment length	0.00	mi	0.00	mi
Number of lanes	2		2	
Driver population adjustment, fP	1.00		1.00	
Trucks and buses PCE, ET	1.5		1.5	
Recreational vehicles PCE, ER	1.2		1.2	
Heavy vehicle adjustment, fHV	0.952		0.952	
Flow rate, vp	323	pcphpl	463	pcphpl

RESULTS

Direction	1		2	
Flow rate, vp	323	pcphpl	463	pcphpl
Free-flow speed, FFS	59.8	mph	59.8	mph
Avg. passenger-car travel speed, S	60.0	mph	60.0	mph
Level of service, LOS	A		A	
Density, D	5.4	pc/mi/ln	7.7	pc/mi/ln

Bicycle Level of Service

Posted speed limit, Sp		55
Percent of segment with occupied on-highway parking	0	0
Pavement rating, P	3	3
Flow rate in outside lane, vOL	308.5	441.5
Effective width of outside lane, We	24.00	24.00
Effective speed factor, St	4.79	4.79
Bicycle LOS Score, BLOS	4.85	5.03
Bicycle LOS	E	E

Overall results are not computed when free-flow speed is less than 45 mph.

HCS 2010: Freeway Weaving Release 6.2

Phone: Fax:
E-mail:

Operational Analysis

Analyst:	FR
Agency/Co.:	FEHR AND PEERS
Date Performed:	7/24/2014
Analysis Time Period:	AM
Freeway/Dir of Travel:	SR138 EB
Weaving Location:	I5 TO GORMAN POST
Analysis Year:	2025 ALT1
Description:	

Inputs

Segment Type	Freeway	
Weaving configuration	One-Sided	
Number of lanes, N	4	ln
Weaving segment length, LS	1700	ft
Freeway free-flow speed, FFS	70	mi/h
Minimum segment speed, SMIN	25	mi/h
Freeway maximum capacity, cIFL	2100*	pc/h/ln
Terrain type	Level	
Grade	0.00	%
Length	0.00	mi

Conversion to pc/h Under Base Conditions

	Volume Components				
	VFF	VRF	VFR	VRR	
Volume, V	226	556	63	44	veh/h
Peak hour factor, PHF	0.87	0.87	0.87	0.87	
Peak 15-min volume, v15	65	160	18	13	
Trucks and buses	10	10	2	2	%
Recreational vehicles	0	0	0	0	%
Trucks and buses PCE, ET	1.5	1.5	1.5	1.5	
Recreational vehicle PCE, ER	1.2	1.2	1.2	1.2	
Heavy vehicle adjustment, fHV	0.952	0.952	0.990	0.990	
Driver population adjustment, fP	1.00	1.00	1.00	1.00	
Flow rate, v	273	671	73	51	pc/h

Volume ratio, VR 0.697

Configuration Characteristics

Number of maneuver lanes, NWL	2	ln
Interchange density, ID	2.0	int/mi
Minimum RF lane changes, LCRF	0	lc/pc
Minimum FR lane changes, LCFR	2	lc/pc
Minimum RR lane changes, LCRR		lc/pc
Minimum weaving lane changes, LCMIN	146	lc/h
Weaving lane changes, LCW	708	lc/h
Non-weaving vehicle index, INW	110	
Non-weaving lane change, LCNW	218	lc/h
Total lane changes, LCALL	926	lc/h

Weaving and Non-Weaving Speeds

Weaving intensity factor, W 0.140

Average weaving speed, SW	64.5	mi/h
Average non-weaving speed, SNW	67.7	mi/h

Weaving Segment Speed, Density, Level of Service and Capacity

Weaving segment speed, S	65.4	mi/h
Weaving segment density, D	4.1	pc/mi/ln
Level of service, LOS	A	
Weaving segment v/c ratio	0.310	
Weaving segment flow rate, v	1068	pc/h
Weaving segment capacity, cW	3281	veh/h

Limitations on Weaving Segments

If limit reached, see note.

	Minimum	Maximum	Actual	Note
Weaving length (ft)	300	10214	1700	a,b
		Maximum	Analyzed	
Density-based capacty, cIWL (pc/h/ln)		2100*	1449	c
		Maximum	Analyzed	
v/c ratio		1.00	0.310	d

Notes:

a. In weaving segments shorter than 300 ft, weaving vehicles are assumed to make only necessary lane changes.

b. Weaving segments longer than the calculated maximum length should be treated as isolated merge and diverge areas using the procedures of Chapter 13, "Freeway Merge and Diverge Segments."

c. The density-based capacity exceeds the capacity of a basic freeway segment, under equivalent ideal conditions.

d. Volumes exceed the weaving segment capacity. The level of service is F.

HCS 2010: Freeway Weaving Release 6.2

Phone: Fax:
E-mail:

Operational Analysis

Analyst:	FR
Agency/Co.:	FEHR AND PEERS
Date Performed:	7/24/2014
Analysis Time Period:	PM
Freeway/Dir of Travel:	SR138 EB
Weaving Location:	I5 TO GORMAN POST
Analysis Year:	2025 ALT1
Description:	

Inputs

Segment Type	Freeway	
Weaving configuration	One-Sided	
Number of lanes, N	4	ln
Weaving segment length, LS	1700	ft
Freeway free-flow speed, FFS	70	mi/h
Minimum segment speed, SMIN	25	mi/h
Freeway maximum capacity, cIFL	2100*	pc/h/ln
Terrain type	Level	
Grade	0.00	%
Length	0.00	mi

Conversion to pc/h Under Base Conditions

	Volume Components				
	VFF	VRF	VFR	VRR	
Volume, V	801	551	231	34	veh/h
Peak hour factor, PHF	0.87	0.87	0.87	0.87	
Peak 15-min volume, v15	230	158	66	10	
Trucks and buses	10	10	2	2	%
Recreational vehicles	0	0	0	0	%
Trucks and buses PCE, ET	1.5	1.5	1.5	1.5	
Recreational vehicle PCE, ER	1.2	1.2	1.2	1.2	
Heavy vehicle adjustment, fHV	0.952	0.952	0.990	0.990	
Driver population adjustment, fP	1.00	1.00	1.00	1.00	
Flow rate, v	967	665	268	39	pc/h

Volume ratio, VR 0.481

Configuration Characteristics

Number of maneuver lanes, NWL	2	ln
Interchange density, ID	2.0	int/mi
Minimum RF lane changes, LCRF	0	lc/pc
Minimum FR lane changes, LCFR	2	lc/pc
Minimum RR lane changes, LCRR		lc/pc
Minimum weaving lane changes, LCMIN	536	lc/h
Weaving lane changes, LCW	1098	lc/h
Non-weaving vehicle index, INW	342	
Non-weaving lane change, LCNW	358	lc/h
Total lane changes, LCALL	1456	lc/h

Weaving and Non-Weaving Speeds

Weaving intensity factor, W 0.200

Average weaving speed, SW	62.5	mi/h
Average non-weaving speed, SNW	63.8	mi/h

Weaving Segment Speed, Density, Level of Service and Capacity

Weaving segment speed, S	63.2	mi/h
Weaving segment density, D	7.7	pc/mi/ln
Level of service, LOS	A	
Weaving segment v/c ratio	0.389	
Weaving segment flow rate, v	1939	pc/h
Weaving segment capacity, cW	4750	veh/h

Limitations on Weaving Segments

If limit reached, see note.

	Minimum	Maximum	Actual	Note
Weaving length (ft)	300	7607	1700	a,b
		Maximum	Analyzed	
Density-based capacty, cIWL (pc/h/ln)		2100*	1648	c
		Maximum	Analyzed	
v/c ratio		1.00	0.389	d

Notes:

a. In weaving segments shorter than 300 ft, weaving vehicles are assumed to make only necessary lane changes.

b. Weaving segments longer than the calculated maximum length should be treated as isolated merge and diverge areas using the procedures of Chapter 13, "Freeway Merge and Diverge Segments."

c. The density-based capacity exceeds the capacity of a basic freeway segment, under equivalent ideal conditions.

d. Volumes exceed the weaving segment capacity. The level of service is F.

HCS 2010: Freeway Weaving Release 6.2

Phone: Fax:
E-mail:

Operational Analysis

Analyst:	FR
Agency/Co.:	FEHR AND PEERS
Date Performed:	7/24/2014
Analysis Time Period:	AM
Freeway/Dir of Travel:	SR138 EB
Weaving Location:	I5 TO GORMAN POST
Analysis Year:	2025 ALT1
Description:	

Inputs

Segment Type	Freeway	
Weaving configuration	One-Sided	
Number of lanes, N	3	ln
Weaving segment length, LS	2500	ft
Freeway free-flow speed, FFS	70	mi/h
Minimum segment speed, SMIN	25	mi/h
Freeway maximum capacity, cIFL	2100*	pc/h/ln
Terrain type	Level	
Grade	0.00	%
Length	0.00	mi

Conversion to pc/h Under Base Conditions

	Volume Components				
	VFF	VRF	VFR	VRR	
Volume, V	834	260	553	19	veh/h
Peak hour factor, PHF	0.87	0.87	0.87	0.87	
Peak 15-min volume, v15	240	75	159	5	
Trucks and buses	10	2	10	2	%
Recreational vehicles	0	0	0	0	%
Trucks and buses PCE, ET	1.5	1.5	1.5	1.5	
Recreational vehicle PCE, ER	1.2	1.2	1.2	1.2	
Heavy vehicle adjustment, fHV	0.952	0.990	0.952	0.990	
Driver population adjustment, fP	1.00	1.00	1.00	1.00	
Flow rate, v	1007	302	667	22	pc/h

Volume ratio, VR 0.485

Configuration Characteristics

Number of maneuver lanes, NWL	3	ln
Interchange density, ID	2.0	int/mi
Minimum RF lane changes, LCRF	1	lc/pc
Minimum FR lane changes, LCFR	0	lc/pc
Minimum RR lane changes, LCRR		lc/pc
Minimum weaving lane changes, LCMIN	302	lc/h
Weaving lane changes, LCW	698	lc/h
Non-weaving vehicle index, INW	515	
Non-weaving lane change, LCNW	989	lc/h
Total lane changes, LCALL	1687	lc/h

Weaving and Non-Weaving Speeds

Weaving intensity factor, W 0.166

Average weaving speed, SW	63.6	mi/h
Average non-weaving speed, SNW	64.6	mi/h

Weaving Segment Speed, Density, Level of Service and Capacity

Weaving segment speed, S	64.1	mi/h
Weaving segment density, D	10.4	pc/mi/ln
Level of service, LOS	B	
Weaving segment v/c ratio	0.365	
Weaving segment flow rate, v	1998	pc/h
Weaving segment capacity, cW	5217	veh/h

Limitations on Weaving Segments

If limit reached, see note.

	Minimum	Maximum	Actual	Note
Weaving length (ft)	300	6085	2500	a,b
		Maximum	Analyzed	
Density-based capacty, cIWL (pc/h/ln)		2100*	1826	c
		Maximum	Analyzed	
v/c ratio		1.00	0.365	d

Notes:

a. In weaving segments shorter than 300 ft, weaving vehicles are assumed to make only necessary lane changes.

b. Weaving segments longer than the calculated maximum length should be treated as isolated merge and diverge areas using the procedures of Chapter 13, "Freeway Merge and Diverge Segments."

c. The density-based capacity exceeds the capacity of a basic freeway segment, under equivalent ideal conditions.

d. Volumes exceed the weaving segment capacity. The level of service is F.

HCS 2010: Freeway Weaving Release 6.2

Phone: Fax:
E-mail:

Operational Analysis

Analyst:	FR
Agency/Co.:	FEHR AND PEERS
Date Performed:	7/24/2014
Analysis Time Period:	PM
Freeway/Dir of Travel:	SR138 WB
Weaving Location:	I5 TO GORMAN POST
Analysis Year:	2025 ALT1
Description:	

Inputs

Segment Type	Freeway	
Weaving configuration	One-Sided	
Number of lanes, N	3	ln
Weaving segment length, LS	2500	ft
Freeway free-flow speed, FFS	70	mi/h
Minimum segment speed, SMIN	25	mi/h
Freeway maximum capacity, cIFL	2100*	pc/h/ln
Terrain type	Level	
Grade	0.00	%
Length	0.00	mi

Conversion to pc/h Under Base Conditions

	Volume Components				
	VFF	VRF	VFR	VRR	
Volume, V	388	97	640	26	veh/h
Peak hour factor, PHF	0.87	0.87	0.87	0.87	
Peak 15-min volume, v15	111	28	184	7	
Trucks and buses	10	2	10	2	%
Recreational vehicles	0	0	0	0	%
Trucks and buses PCE, ET	1.5	1.5	1.5	1.5	
Recreational vehicle PCE, ER	1.2	1.2	1.2	1.2	
Heavy vehicle adjustment, fHV	0.952	0.990	0.952	0.990	
Driver population adjustment, fP	1.00	1.00	1.00	1.00	
Flow rate, v	468	113	772	30	pc/h

Volume ratio, VR 0.640

Configuration Characteristics

Number of maneuver lanes, NWL	3	ln
Interchange density, ID	2.0	int/mi
Minimum RF lane changes, LCRF	1	lc/pc
Minimum FR lane changes, LCFR	0	lc/pc
Minimum RR lane changes, LCRR		lc/pc
Minimum weaving lane changes, LCMIN	113	lc/h
Weaving lane changes, LCW	509	lc/h
Non-weaving vehicle index, INW	249	
Non-weaving lane change, LCNW	880	lc/h
Total lane changes, LCALL	1389	lc/h

Weaving and Non-Weaving Speeds

Weaving intensity factor, W 0.142

Average weaving speed, SW	64.4	mi/h
Average non-weaving speed, SNW	67.0	mi/h

Weaving Segment Speed, Density, Level of Service and Capacity

Weaving segment speed, S	65.3	mi/h
Weaving segment density, D	7.1	pc/mi/ln
Level of service, LOS	A	
Weaving segment v/c ratio	0.274	
Weaving segment flow rate, v	1383	pc/h
Weaving segment capacity, cW	4811	veh/h

Limitations on Weaving Segments

If limit reached, see note.

	Minimum	Maximum	Actual	Note
Weaving length (ft)	300	7941	2500	a,b
		Maximum	Analyzed	
Density-based capacty, cIWL (pc/h/ln)		2100*	1684	c
		Maximum	Analyzed	
v/c ratio		1.00	0.274	d

Notes:

a. In weaving segments shorter than 300 ft, weaving vehicles are assumed to make only necessary lane changes.

b. Weaving segments longer than the calculated maximum length should be treated as isolated merge and diverge areas using the procedures of Chapter 13, "Freeway Merge and Diverge Segments."

c. The density-based capacity exceeds the capacity of a basic freeway segment, under equivalent ideal conditions.

d. Volumes exceed the weaving segment capacity. The level of service is F.

Appendix I
Intersection LOS Worksheets – 2020 and 2025 Conditions

Intersection	
Int Delay, s/veh	3

Movement	EBL	EBT	WBT	WBR	SBL	SBR
Vol, veh/h	50	360	380	50	60	90
Conflicting Peds, #/hr	0	0	0	0	0	0
Sign Control	Free	Free	Free	Free	Stop	Stop
RT Channelized	-	None	-	None	-	None
Storage Length	105	-	-	-	0	-
Veh in Median Storage, #	-	0	0	-	0	-
Grade, %	-	0	0	-	0	-
Peak Hour Factor	87	87	87	87	87	87
Heavy Vehicles, %	35	35	41	41	2	2
Mvmt Flow	57	414	437	57	69	103

Major/Minor	Major1		Major2		Minor2	
Conflicting Flow All	494	0	-	0	788	247
Stage 1	-	-	-	-	466	-
Stage 2	-	-	-	-	322	-
Critical Hdwy	4.8	-	-	-	6.84	6.94
Critical Hdwy Stg 1	-	-	-	-	5.84	-
Critical Hdwy Stg 2	-	-	-	-	5.84	-
Follow-up Hdwy	2.55	-	-	-	3.52	3.32
Pot Cap-1 Maneuver	866	-	-	-	328	753
Stage 1	-	-	-	-	598	-
Stage 2	-	-	-	-	707	-
Platoon blocked, %		-	-	-		
Mov Cap-1 Maneuver	866	-	-	-	306	753
Mov Cap-2 Maneuver	-	-	-	-	306	-
Stage 1	-	-	-	-	598	-
Stage 2	-	-	-	-	660	-

Approach	EB	WB	SB
HCM Control Delay, s	1.2	0	16.8
HCM LOS			C

Minor Lane/Major Mvmt	EBL	EBT	WBT	WBR	SBLn1
Capacity (veh/h)	866	-	-	-	475
HCM Lane V/C Ratio	0.066	-	-	-	0.363
HCM Control Delay (s)	9.5	-	-	-	16.8
HCM Lane LOS	A	-	-	-	C
HCM 95th %tile Q(veh)	0.2	-	-	-	1.6

Intersection	
Int Delay, s/veh	2

Movement	EBT	EBR	WBL	WBT	NBL	NBR
Vol, veh/h	310	70	40	300	50	10
Conflicting Peds, #/hr	0	0	0	0	0	0
Sign Control	Free	Free	Free	Free	Stop	Stop
RT Channelized	-	None	-	None	-	None
Storage Length	-	-	-	-	0	-
Veh in Median Storage, #	0	-	-	0	0	-
Grade, %	0	-	-	0	0	-
Peak Hour Factor	79	79	79	79	79	79
Heavy Vehicles, %	35	35	41	41	2	2
Mvmt Flow	392	89	51	380	63	13

Major/Minor	Major1		Major2		Minor1	
Conflicting Flow All	0	0	481	0	918	437
Stage 1	-	-	-	-	437	-
Stage 2	-	-	-	-	481	-
Critical Hdwy	-	-	4.51	-	6.42	6.22
Critical Hdwy Stg 1	-	-	-	-	5.42	-
Critical Hdwy Stg 2	-	-	-	-	5.42	-
Follow-up Hdwy	-	-	2.569	-	3.518	3.318
Pot Cap-1 Maneuver	-	-	906	-	302	620
Stage 1	-	-	-	-	651	-
Stage 2	-	-	-	-	622	-
Platoon blocked, %	-	-		-		
Mov Cap-1 Maneuver	-	-	906	-	281	620
Mov Cap-2 Maneuver	-	-	-	-	281	-
Stage 1	-	-	-	-	651	-
Stage 2	-	-	-	-	578	-

Approach	EB	WB	NB
HCM Control Delay, s	0	1.1	20.4
HCM LOS			C

Minor Lane/Major Mvmt	NBLn1	EBT	EBR	WBL	WBT
Capacity (veh/h)	309	-	-	906	-
HCM Lane V/C Ratio	0.246	-	-	0.056	-
HCM Control Delay (s)	20.4	-	-	9.2	0
HCM Lane LOS	C	-	-	A	A
HCM 95th %tile Q(veh)	0.9	-	-	0.2	-

Intersection	
Int Delay, s/veh	1.5

Movement	EBL	EBT	WBT	WBR	SBL	SBR
Vol, veh/h	60	250	310	20	10	20
Conflicting Peds, #/hr	0	0	0	0	0	0
Sign Control	Free	Free	Free	Free	Stop	Stop
RT Channelized	-	None	-	None	-	None
Storage Length	-	-	-	-	0	-
Veh in Median Storage, #	-	0	0	-	0	-
Grade, %	-	0	0	-	0	-
Peak Hour Factor	72	72	72	72	72	72
Heavy Vehicles, %	30	30	38	38	2	2
Mvmt Flow	83	347	431	28	14	28

Major/Minor	Major1		Major2		Minor2	
Conflicting Flow All	458	0	-	0	958	444
Stage 1	-	-	-	-	444	-
Stage 2	-	-	-	-	514	-
Critical Hdwy	4.4	-	-	-	6.42	6.22
Critical Hdwy Stg 1	-	-	-	-	5.42	-
Critical Hdwy Stg 2	-	-	-	-	5.42	-
Follow-up Hdwy	2.47	-	-	-	3.518	3.318
Pot Cap-1 Maneuver	970	-	-	-	285	614
Stage 1	-	-	-	-	646	-
Stage 2	-	-	-	-	600	-
Platoon blocked, %		-	-	-		
Mov Cap-1 Maneuver	970	-	-	-	255	614
Mov Cap-2 Maneuver	-	-	-	-	255	-
Stage 1	-	-	-	-	646	-
Stage 2	-	-	-	-	536	-

Approach	EB	WB	SB
HCM Control Delay, s	1.8	0	14.6
HCM LOS			B

Minor Lane/Major Mvmt	EBL	EBT	WBT	WBR	SBLn1
Capacity (veh/h)	970	-	-	-	418
HCM Lane V/C Ratio	0.086	-	-	-	0.1
HCM Control Delay (s)	9.1	0	-	-	14.6
HCM Lane LOS	A	A	-	-	B
HCM 95th %tile Q(veh)	0.3	-	-	-	0.3

Intersection	
Int Delay, s/veh	2.1

Movement	EBL	EBT	WBT	WBR	SBL	SBR
Vol, veh/h	70	180	230	10	10	40
Conflicting Peds, #/hr	0	0	0	0	0	0
Sign Control	Free	Free	Free	Free	Stop	Stop
RT Channelized	-	None	-	None	-	None
Storage Length	-	-	-	-	0	-
Veh in Median Storage, #	-	0	0	-	0	-
Grade, %	-	0	0	-	0	-
Peak Hour Factor	92	92	92	92	92	92
Heavy Vehicles, %	30	30	38	38	2	2
Mvmt Flow	76	196	250	11	11	43

Major/Minor	Major1		Major2		Minor2	
Conflicting Flow All	261	0	-	0	603	255
Stage 1	-	-	-	-	255	-
Stage 2	-	-	-	-	348	-
Critical Hdwy	4.4	-	-	-	6.42	6.22
Critical Hdwy Stg 1	-	-	-	-	5.42	-
Critical Hdwy Stg 2	-	-	-	-	5.42	-
Follow-up Hdwy	2.47	-	-	-	3.518	3.318
Pot Cap-1 Maneuver	1157	-	-	-	462	784
Stage 1	-	-	-	-	788	-
Stage 2	-	-	-	-	715	-
Platoon blocked, %		-	-	-		
Mov Cap-1 Maneuver	1157	-	-	-	428	784
Mov Cap-2 Maneuver	-	-	-	-	428	-
Stage 1	-	-	-	-	788	-
Stage 2	-	-	-	-	662	-

Approach	EB	WB	SB
HCM Control Delay, s	2.3	0	10.8
HCM LOS			B

Minor Lane/Major Mvmt	EBL	EBT	WBT	WBR	SBLn1
Capacity (veh/h)	1157	-	-	-	672
HCM Lane V/C Ratio	0.066	-	-	-	0.081
HCM Control Delay (s)	8.3	0	-	-	10.8
HCM Lane LOS	A	A	-	-	B
HCM 95th %tile Q(veh)	0.2	-	-	-	0.3

Intersection	
Int Delay, s/veh	2.7

Movement	EBL	EBT	WBT	WBR	SBL	SBR
Vol, veh/h	40	150	170	10	10	80
Conflicting Peds, #/hr	0	0	0	0	0	0
Sign Control	Free	Free	Free	Free	Stop	Stop
RT Channelized	-	None	-	None	-	None
Storage Length	-	-	-	-	0	-
Veh in Median Storage, #	-	0	0	-	0	-
Grade, %	-	0	0	-	0	-
Peak Hour Factor	95	95	95	95	95	95
Heavy Vehicles, %	30	30	37	37	2	2
Mvmt Flow	42	158	179	11	11	84

Major/Minor	Major1		Major2		Minor2	
Conflicting Flow All	189	0	-	0	426	184
Stage 1	-	-	-	-	184	-
Stage 2	-	-	-	-	242	-
Critical Hdwy	4.4	-	-	-	6.42	6.22
Critical Hdwy Stg 1	-	-	-	-	5.42	-
Critical Hdwy Stg 2	-	-	-	-	5.42	-
Follow-up Hdwy	2.47	-	-	-	3.518	3.318
Pot Cap-1 Maneuver	1233	-	-	-	585	858
Stage 1	-	-	-	-	848	-
Stage 2	-	-	-	-	798	-
Platoon blocked, %		-	-	-		
Mov Cap-1 Maneuver	1233	-	-	-	563	858
Mov Cap-2 Maneuver	-	-	-	-	563	-
Stage 1	-	-	-	-	848	-
Stage 2	-	-	-	-	768	-

Approach	EB	WB	SB
HCM Control Delay, s	1.7	0	10
HCM LOS			B

Minor Lane/Major Mvmt	EBL	EBT	WBT	WBR	SBLn1
Capacity (veh/h)	1233	-	-	-	811
HCM Lane V/C Ratio	0.034	-	-	-	0.117
HCM Control Delay (s)	8	0	-	-	10
HCM Lane LOS	A	A	-	-	B
HCM 95th %tile Q(veh)	0.1	-	-	-	0.4

Intersection	
Int Delay, s/veh	1.7

Movement	EBL	EBT	WBT	WBR	SBL	SBR
Vol, veh/h	10	150	180	50	50	10
Conflicting Peds, #/hr	0	0	0	0	0	0
Sign Control	Free	Free	Free	Free	Stop	Stop
RT Channelized	-	None	-	None	-	None
Storage Length	-	-	-	-	0	-
Veh in Median Storage, #	-	0	0	-	0	-
Grade, %	-	0	0	-	0	-
Peak Hour Factor	97	97	97	97	97	97
Heavy Vehicles, %	30	30	37	37	2	2
Mvmt Flow	10	155	186	52	52	10

Major/Minor	Major1		Major2		Minor2	
Conflicting Flow All	237	0	-	0	386	211
Stage 1	-	-	-	-	211	-
Stage 2	-	-	-	-	175	-
Critical Hdwy	4.4	-	-	-	6.42	6.22
Critical Hdwy Stg 1	-	-	-	-	5.42	-
Critical Hdwy Stg 2	-	-	-	-	5.42	-
Follow-up Hdwy	2.47	-	-	-	3.518	3.318
Pot Cap-1 Maneuver	1182	-	-	-	617	829
Stage 1	-	-	-	-	824	-
Stage 2	-	-	-	-	855	-
Platoon blocked, %		-	-	-		
Mov Cap-1 Maneuver	1182	-	-	-	611	829
Mov Cap-2 Maneuver	-	-	-	-	611	-
Stage 1	-	-	-	-	824	-
Stage 2	-	-	-	-	847	-

Approach	EB	WB	SB
HCM Control Delay, s	0.5	0	11.2
HCM LOS			B

Minor Lane/Major Mvmt	EBL	EBT	WBT	WBR	SBLn1
Capacity (veh/h)	1182	-	-	-	639
HCM Lane V/C Ratio	0.009	-	-	-	0.097
HCM Control Delay (s)	8.1	0	-	-	11.2
HCM Lane LOS	A	A	-	-	B
HCM 95th %tile Q(veh)	0	-	-	-	0.3

Intersection	
Int Delay, s/veh	5.9

Movement	EBL	EBT	EBR	WBL	WBT	WBR	NBL	NBT	NBR	SBL	SBT	SBR
Vol, veh/h	20	180	110	30	190	10	30	30	20	10	80	10
Conflicting Peds, #/hr	0	0	0	0	0	0	0	0	0	0	0	0
Sign Control	Free	Free	Free	Free	Free	Free	Stop	Stop	Stop	Stop	Stop	Stop
RT Channelized	-	-	None	-	-	None	-	-	None	-	-	None
Storage Length	-	-	-	-	-	-	-	-	-	-	-	-
Veh in Median Storage, #	-	0	-	-	0	-	-	0	-	-	0	-
Grade, %	-	0	-	-	0	-	-	0	-	-	0	-
Peak Hour Factor	79	79	79	79	79	79	79	79	79	79	79	79
Heavy Vehicles, %	30	30	30	39	39	39	2	2	2	2	2	2
Mvmt Flow	25	228	139	38	241	13	38	38	25	13	101	13

Major/Minor	Major1			Major2			Minor1			Minor2		
Conflicting Flow All	253	0	0	367	0	0	728	677	297	703	741	247
Stage 1	-	-	-	-	-	-	348	348	-	323	323	-
Stage 2	-	-	-	-	-	-	380	329	-	380	418	-
Critical Hdwy	4.4	-	-	4.49	-	-	7.12	6.52	6.22	7.12	6.52	6.22
Critical Hdwy Stg 1	-	-	-	-	-	-	6.12	5.52	-	6.12	5.52	-
Critical Hdwy Stg 2	-	-	-	-	-	-	6.12	5.52	-	6.12	5.52	-
Follow-up Hdwy	2.47	-	-	2.551	-	-	3.518	4.018	3.318	3.518	4.018	3.318
Pot Cap-1 Maneuver	1165	-	-	1014	-	-	339	375	742	352	344	792
Stage 1	-	-	-	-	-	-	668	634	-	689	650	-
Stage 2	-	-	-	-	-	-	642	646	-	642	591	-
Platoon blocked, %		-	-		-	-						
Mov Cap-1 Maneuver	1165	-	-	1014	-	-	239	349	742	295	320	792
Mov Cap-2 Maneuver	-	-	-	-	-	-	239	349	-	295	320	-
Stage 1	-	-	-	-	-	-	650	617	-	670	621	-
Stage 2	-	-	-	-	-	-	505	618	-	566	575	-

Approach	EB	WB	NB	SB
HCM Control Delay, s	0.5	1.1	20.3	22
HCM LOS			C	C

Minor Lane/Major Mvmt	NBLn1	EBL	EBT	EBR	WBL	WBT	WBR	SBLn1
Capacity (veh/h)	336	1165	-	-	1014	-	-	337
HCM Lane V/C Ratio	0.301	0.022	-	-	0.037	-	-	0.376
HCM Control Delay (s)	20.3	8.2	0	-	8.7	0	-	22
HCM Lane LOS	C	A	A	-	A	A	-	C
HCM 95th %tile Q(veh)	1.2	0.1	-	-	0.1	-	-	1.7

Intersection	
Int Delay, s/veh	3.1

Movement	EBL	EBT	WBT	WBR	SBL	SBR
Vol, veh/h	20	180	200	50	80	30
Conflicting Peds, #/hr	0	0	0	0	0	0
Sign Control	Free	Free	Free	Free	Stop	Stop
RT Channelized	-	None	-	None	-	None
Storage Length	-	-	-	-	0	-
Veh in Median Storage, #	-	0	0	-	0	-
Grade, %	-	0	0	-	0	-
Peak Hour Factor	79	79	79	79	79	79
Heavy Vehicles, %	30	30	39	39	2	2
Mvmt Flow	25	228	253	63	101	38

Major/Minor	Major1		Major2		Minor2	
Conflicting Flow All	316	0	-	0	563	285
Stage 1	-	-	-	-	285	-
Stage 2	-	-	-	-	278	-
Critical Hdwy	4.4	-	-	-	6.42	6.22
Critical Hdwy Stg 1	-	-	-	-	5.42	-
Critical Hdwy Stg 2	-	-	-	-	5.42	-
Follow-up Hdwy	2.47	-	-	-	3.518	3.318
Pot Cap-1 Maneuver	1102	-	-	-	487	754
Stage 1	-	-	-	-	763	-
Stage 2	-	-	-	-	769	-
Platoon blocked, %		-	-	-		
Mov Cap-1 Maneuver	1102	-	-	-	474	754
Mov Cap-2 Maneuver	-	-	-	-	474	-
Stage 1	-	-	-	-	763	-
Stage 2	-	-	-	-	749	-

Approach	EB	WB	SB
HCM Control Delay, s	0.8	0	14.3
HCM LOS			B

Minor Lane/Major Mvmt	EBL	EBT	WBT	WBR	SBLn1
Capacity (veh/h)	1102	-	-	-	527
HCM Lane V/C Ratio	0.023	-	-	-	0.264
HCM Control Delay (s)	8.3	0	-	-	14.3
HCM Lane LOS	A	A	-	-	B
HCM 95th %tile Q(veh)	0.1	-	-	-	1.1

Intersection	
Int Delay, s/veh	1

Movement	EBL	EBT	WBT	WBR	SBL	SBR
Vol, veh/h	10	170	220	10	20	10
Conflicting Peds, #/hr	0	0	0	0	0	0
Sign Control	Free	Free	Free	Free	Stop	Stop
RT Channelized	-	None	-	None	-	None
Storage Length	-	-	-	-	0	-
Veh in Median Storage, #	-	0	0	-	0	-
Grade, %	-	0	0	-	0	-
Peak Hour Factor	92	92	92	92	92	92
Heavy Vehicles, %	33	33	41	41	2	2
Mvmt Flow	11	185	239	11	22	11

Major/Minor	Major1		Major2		Minor2	
Conflicting Flow All	250	0	-	0	452	245
Stage 1	-	-	-	-	245	-
Stage 2	-	-	-	-	207	-
Critical Hdwy	4.43	-	-	-	6.42	6.22
Critical Hdwy Stg 1	-	-	-	-	5.42	-
Critical Hdwy Stg 2	-	-	-	-	5.42	-
Follow-up Hdwy	2.497	-	-	-	3.518	3.318
Pot Cap-1 Maneuver	1154	-	-	-	565	794
Stage 1	-	-	-	-	796	-
Stage 2	-	-	-	-	828	-
Platoon blocked, %		-	-	-		
Mov Cap-1 Maneuver	1154	-	-	-	559	794
Mov Cap-2 Maneuver	-	-	-	-	559	-
Stage 1	-	-	-	-	796	-
Stage 2	-	-	-	-	819	-

Approach	EB	WB	SB
HCM Control Delay, s	0.5	0	11.1
HCM LOS			B

Minor Lane/Major Mvmt	EBL	EBT	WBT	WBR	SBLn1
Capacity (veh/h)	1154	-	-	-	620
HCM Lane V/C Ratio	0.009	-	-	-	0.053
HCM Control Delay (s)	8.1	0	-	-	11.1
HCM Lane LOS	A	A	-	-	B
HCM 95th %tile Q(veh)	0	-	-	-	0.2

Intersection	
Int Delay, s/veh	2.4

Movement	EBL	EBT	EBR	WBL	WBT	WBR	NBL	NBT	NBR	SBL	SBT	SBR
Vol, veh/h	10	120	40	20	210	10	10	10	20	10	10	10
Conflicting Peds, #/hr	0	0	0	0	0	0	0	0	0	0	0	0
Sign Control	Free	Free	Free	Free	Free	Free	Stop	Stop	Stop	Stop	Stop	Stop
RT Channelized	-	-	None	-	-	None	-	-	None	-	-	None
Storage Length	-	-	-	-	-	-	-	-	-	-	-	-
Veh in Median Storage, #	-	0	-	-	0	-	-	0	-	-	0	-
Grade, %	-	0	-	-	0	-	-	0	-	-	0	-
Peak Hour Factor	74	74	74	74	74	74	74	74	74	74	74	74
Heavy Vehicles, %	33	33	33	41	41	41	2	2	2	2	2	2
Mvmt Flow	14	162	54	27	284	14	14	14	27	14	14	14

Major/Minor	Major1			Major2			Minor1			Minor2		
Conflicting Flow All	297	0	0	216	0	0	574	567	189	581	588	291
Stage 1	-	-	-	-	-	-	216	216	-	345	345	-
Stage 2	-	-	-	-	-	-	358	351	-	236	243	-
Critical Hdwy	4.43	-	-	4.51	-	-	7.12	6.52	6.22	7.12	6.52	6.22
Critical Hdwy Stg 1	-	-	-	-	-	-	6.12	5.52	-	6.12	5.52	-
Critical Hdwy Stg 2	-	-	-	-	-	-	6.12	5.52	-	6.12	5.52	-
Follow-up Hdwy	2.497	-	-	2.569	-	-	3.518	4.018	3.318	3.518	4.018	3.318
Pot Cap-1 Maneuver	1107	-	-	1154	-	-	430	433	853	425	421	748
Stage 1	-	-	-	-	-	-	786	724	-	671	636	-
Stage 2	-	-	-	-	-	-	660	632	-	767	705	-
Platoon blocked, %		-	-		-	-						
Mov Cap-1 Maneuver	1107	-	-	1154	-	-	398	415	853	389	403	748
Mov Cap-2 Maneuver	-	-	-	-	-	-	398	415	-	389	403	-
Stage 1	-	-	-	-	-	-	775	714	-	662	618	-
Stage 2	-	-	-	-	-	-	616	614	-	718	695	-

Approach	EB	WB	NB	SB
HCM Control Delay, s	0.5	0.7	12.3	13.4
HCM LOS			B	B

Minor Lane/Major Mvmt	NBLn1	EBL	EBT	EBR	WBL	WBT	WBR	SBLn1
Capacity (veh/h)	550	1107	-	-	1154	-	-	470
HCM Lane V/C Ratio	0.098	0.012	-	-	0.023	-	-	0.086
HCM Control Delay (s)	12.3	8.3	0	-	8.2	0	-	13.4
HCM Lane LOS	B	A	A	-	A	A	-	B
HCM 95th %tile Q(veh)	0.3	0	-	-	0.1	-	-	0.3

Intersection	
Int Delay, s/veh	2.3

Movement	EBL	EBT	EBR	WBL	WBT	WBR	NBL	NBT	NBR	SBL	SBT	SBR
Vol, veh/h	10	120	10	10	210	10	10	10	10	20	10	10
Conflicting Peds, #/hr	0	0	0	0	0	0	0	0	0	0	0	0
Sign Control	Free	Free	Free	Free	Free	Free	Stop	Stop	Stop	Stop	Stop	Stop
RT Channelized	-	-	None	-	-	None	-	-	None	-	-	None
Storage Length	-	-	-	-	-	-	-	-	-	-	-	-
Veh in Median Storage, #	-	0	-	-	0	-	-	0	-	-	0	-
Grade, %	-	0	-	-	0	-	-	0	-	-	0	-
Peak Hour Factor	79	79	79	79	79	79	79	79	79	79	79	79
Heavy Vehicles, %	31	31	31	39	39	39	2	2	2	2	2	2
Mvmt Flow	13	152	13	13	266	13	13	13	13	25	13	13

Major/Minor	Major1			Major2			Minor1			Minor2		
Conflicting Flow All	278	0	0	165	0	0	494	488	158	493	487	272
Stage 1	-	-	-	-	-	-	184	184	-	297	297	-
Stage 2	-	-	-	-	-	-	310	304	-	196	190	-
Critical Hdwy	4.41	-	-	4.49	-	-	7.12	6.52	6.22	7.12	6.52	6.22
Critical Hdwy Stg 1	-	-	-	-	-	-	6.12	5.52	-	6.12	5.52	-
Critical Hdwy Stg 2	-	-	-	-	-	-	6.12	5.52	-	6.12	5.52	-
Follow-up Hdwy	2.479	-	-	2.551	-	-	3.518	4.018	3.318	3.518	4.018	3.318
Pot Cap-1 Maneuver	1135	-	-	1217	-	-	486	480	887	486	481	767
Stage 1	-	-	-	-	-	-	818	747	-	712	668	-
Stage 2	-	-	-	-	-	-	700	663	-	806	743	-
Platoon blocked, %		-	-		-	-						
Mov Cap-1 Maneuver	1135	-	-	1217	-	-	459	468	887	460	469	767
Mov Cap-2 Maneuver	-	-	-	-	-	-	459	468	-	460	469	-
Stage 1	-	-	-	-	-	-	807	737	-	703	659	-
Stage 2	-	-	-	-	-	-	666	654	-	771	733	-

Approach	EB	WB	NB	SB
HCM Control Delay, s	0.6	0.3	12	12.8
HCM LOS			B	B

Minor Lane/Major Mvmt	NBLn1	EBL	EBT	EBR	WBL	WBT	WBR	SBLn1
Capacity (veh/h)	551	1135	-	-	1217	-	-	514
HCM Lane V/C Ratio	0.069	0.011	-	-	0.01	-	-	0.099
HCM Control Delay (s)	12	8.2	0	-	8	0	-	12.8
HCM Lane LOS	B	A	A	-	A	A	-	B
HCM 95th %tile Q(veh)	0.2	0	-	-	0	-	-	0.3

Intersection	
Int Delay, s/veh	4.7

Movement	EBL	EBT	EBR	WBL	WBT	WBR	NBL	NBT	NBR	SBL	SBT	SBR
Vol, veh/h	20	120	20	10	180	40	10	20	10	50	20	40
Conflicting Peds, #/hr	0	0	0	0	0	0	0	0	0	0	0	0
Sign Control	Free	Free	Free	Free	Free	Free	Stop	Stop	Stop	Stop	Stop	Stop
RT Channelized	-	-	None	-	-	None	-	-	None	-	-	None
Storage Length	-	-	-	-	-	-	-	-	-	-	-	-
Veh in Median Storage, #	-	0	-	-	0	-	-	0	-	-	0	-
Grade, %	-	0	-	-	0	-	-	0	-	-	0	-
Peak Hour Factor	72	72	72	72	72	72	72	72	72	72	72	72
Heavy Vehicles, %	31	31	31	39	39	39	2	2	2	2	2	2
Mvmt Flow	28	167	28	14	250	56	14	28	14	69	28	56

Major/Minor	Major1			Major2			Minor1			Minor2		
Conflicting Flow All	306	0	0	194	0	0	583	569	181	563	556	278
Stage 1	-	-	-	-	-	-	236	236	-	306	306	-
Stage 2	-	-	-	-	-	-	347	333	-	257	250	-
Critical Hdwy	4.41	-	-	4.49	-	-	7.12	6.52	6.22	7.12	6.52	6.22
Critical Hdwy Stg 1	-	-	-	-	-	-	6.12	5.52	-	6.12	5.52	-
Critical Hdwy Stg 2	-	-	-	-	-	-	6.12	5.52	-	6.12	5.52	-
Follow-up Hdwy	2.479	-	-	2.551	-	-	3.518	4.018	3.318	3.518	4.018	3.318
Pot Cap-1 Maneuver	1107	-	-	1186	-	-	424	432	862	437	439	761
Stage 1	-	-	-	-	-	-	767	710	-	704	662	-
Stage 2	-	-	-	-	-	-	669	644	-	748	700	-
Platoon blocked, %		-	-		-	-						
Mov Cap-1 Maneuver	1107	-	-	1186	-	-	361	414	862	395	421	761
Mov Cap-2 Maneuver	-	-	-	-	-	-	361	414	-	395	421	-
Stage 1	-	-	-	-	-	-	746	690	-	684	653	-
Stage 2	-	-	-	-	-	-	585	635	-	687	680	-

Approach	EB	WB	NB	SB
HCM Control Delay, s	1	0.4	14	15.8
HCM LOS			B	C

Minor Lane/Major Mvmt	NBLn1	EBL	EBT	EBR	WBL	WBT	WBR	SBLn1
Capacity (veh/h)	457	1107	-	-	1186	-	-	485
HCM Lane V/C Ratio	0.122	0.025	-	-	0.012	-	-	0.315
HCM Control Delay (s)	14	8.3	0	-	8.1	0	-	15.8
HCM Lane LOS	B	A	A	-	A	A	-	C
HCM 95th %tile Q(veh)	0.4	0.1	-	-	0	-	-	1.3

Intersection	
Int Delay, s/veh	2.3

Movement	EBL	EBT	EBR	WBL	WBT	WBR	NBL	NBT	NBR	SBL	SBT	SBR
Vol, veh/h	10	150	10	10	210	10	10	10	10	20	10	10
Conflicting Peds, #/hr	0	0	0	0	0	0	0	0	0	0	0	0
Sign Control	Free	Free	Free	Free	Free	Free	Stop	Stop	Stop	Stop	Stop	Stop
RT Channelized	-	-	None	-	-	None	-	-	None	-	-	None
Storage Length	-	-	-	-	-	-	-	-	-	-	-	-
Veh in Median Storage, #	-	0	-	-	0	-	-	0	-	-	0	-
Grade, %	-	0	-	-	0	-	-	0	-	-	0	-
Peak Hour Factor	77	77	77	77	77	77	77	77	77	77	77	77
Heavy Vehicles, %	29	29	29	36	36	36	2	2	2	2	2	2
Mvmt Flow	13	195	13	13	273	13	13	13	13	26	13	13

Major/Minor	Major1			Major2			Minor1			Minor2		
Conflicting Flow All	286	0	0	208	0	0	545	539	201	545	539	279
Stage 1	-	-	-	-	-	-	227	227	-	305	305	-
Stage 2	-	-	-	-	-	-	318	312	-	240	234	-
Critical Hdwy	4.39	-	-	4.46	-	-	7.12	6.52	6.22	7.12	6.52	6.22
Critical Hdwy Stg 1	-	-	-	-	-	-	6.12	5.52	-	6.12	5.52	-
Critical Hdwy Stg 2	-	-	-	-	-	-	6.12	5.52	-	6.12	5.52	-
Follow-up Hdwy	2.461	-	-	2.524	-	-	3.518	4.018	3.318	3.518	4.018	3.318
Pot Cap-1 Maneuver	1136	-	-	1185	-	-	449	449	840	449	449	760
Stage 1	-	-	-	-	-	-	776	716	-	705	662	-
Stage 2	-	-	-	-	-	-	693	658	-	763	711	-
Platoon blocked, %		-	-		-	-						
Mov Cap-1 Maneuver	1136	-	-	1185	-	-	423	437	840	424	437	760
Mov Cap-2 Maneuver	-	-	-	-	-	-	423	437	-	424	437	-
Stage 1	-	-	-	-	-	-	766	707	-	696	653	-
Stage 2	-	-	-	-	-	-	659	649	-	728	702	-

Approach	EB	WB	NB	SB
HCM Control Delay, s	0.5	0.4	12.6	13.4
HCM LOS			B	B

Minor Lane/Major Mvmt	NBLn1	EBL	EBT	EBR	WBL	WBT	WBR	SBLn1
Capacity (veh/h)	513	1136	-	-	1185	-	-	481
HCM Lane V/C Ratio	0.076	0.011	-	-	0.011	-	-	0.108
HCM Control Delay (s)	12.6	8.2	0	-	8.1	0	-	13.4
HCM Lane LOS	B	A	A	-	A	A	-	B
HCM 95th %tile Q(veh)	0.2	0	-	-	0	-	-	0.4

Intersection	
Int Delay, s/veh	4.3

Movement	EBL	EBT	EBR	WBL	WBT	WBR	NBL	NBT	NBR	SBL	SBT	SBR
Vol, veh/h	20	160	10	20	210	30	10	30	20	30	40	20
Conflicting Peds, #/hr	0	0	0	0	0	0	0	0	0	0	0	0
Sign Control	Free	Free	Free	Free	Free	Free	Stop	Stop	Stop	Stop	Stop	Stop
RT Channelized	-	-	None	-	-	None	-	-	None	-	-	None
Storage Length	-	-	-	-	-	-	-	-	-	-	-	-
Veh in Median Storage, #	-	0	-	-	0	-	-	0	-	-	0	-
Grade, %	-	0	-	-	0	-	-	0	-	-	0	-
Peak Hour Factor	85	85	85	85	85	85	85	85	85	85	85	85
Heavy Vehicles, %	29	29	29	36	36	36	2	2	2	2	2	2
Mvmt Flow	24	188	12	24	247	35	12	35	24	35	47	24

Major/Minor	Major1			Major2			Minor1			Minor2		
Conflicting Flow All	282	0	0	200	0	0	588	570	194	583	559	265
Stage 1	-	-	-	-	-	-	241	241	-	312	312	-
Stage 2	-	-	-	-	-	-	347	329	-	271	247	-
Critical Hdwy	4.39	-	-	4.46	-	-	7.12	6.52	6.22	7.12	6.52	6.22
Critical Hdwy Stg 1	-	-	-	-	-	-	6.12	5.52	-	6.12	5.52	-
Critical Hdwy Stg 2	-	-	-	-	-	-	6.12	5.52	-	6.12	5.52	-
Follow-up Hdwy	2.461	-	-	2.524	-	-	3.518	4.018	3.318	3.518	4.018	3.318
Pot Cap-1 Maneuver	1140	-	-	1193	-	-	421	431	847	424	438	774
Stage 1	-	-	-	-	-	-	762	706	-	699	658	-
Stage 2	-	-	-	-	-	-	669	646	-	735	702	-
Platoon blocked, %		-	-		-	-						
Mov Cap-1 Maneuver	1140	-	-	1193	-	-	360	411	847	371	417	774
Mov Cap-2 Maneuver	-	-	-	-	-	-	360	411	-	371	417	-
Stage 1	-	-	-	-	-	-	744	689	-	682	642	-
Stage 2	-	-	-	-	-	-	587	630	-	662	685	-

Approach	EB	WB	NB	SB
HCM Control Delay, s	0.9	0.6	13.7	15.6
HCM LOS			B	C

Minor Lane/Major Mvmt	NBLn1	EBL	EBT	EBR	WBL	WBT	WBR	SBLn1
Capacity (veh/h)	482	1140	-	-	1193	-	-	444
HCM Lane V/C Ratio	0.146	0.021	-	-	0.02	-	-	0.238
HCM Control Delay (s)	13.7	8.2	0	-	8.1	0	-	15.6
HCM Lane LOS	B	A	A	-	A	A	-	C
HCM 95th %tile Q(veh)	0.5	0.1	-	-	0.1	-	-	0.9

Intersection	
Int Delay, s/veh	1.8

Movement	EBL	EBT	EBR	WBL	WBT	WBR	NBL	NBT	NBR	SBL	SBT	SBR
Vol, veh/h	10	200	10	10	230	10	10	10	10	10	10	10
Conflicting Peds, #/hr	0	0	0	0	0	0	0	0	0	0	0	0
Sign Control	Free	Free	Free	Free	Free	Free	Stop	Stop	Stop	Stop	Stop	Stop
RT Channelized	-	-	None	-	-	None	-	-	None	-	-	None
Storage Length	-	-	-	-	-	-	-	-	-	-	-	-
Veh in Median Storage, #	-	0	-	-	0	-	-	0	-	-	0	-
Grade, %	-	0	-	-	0	-	-	0	-	-	0	-
Peak Hour Factor	84	84	84	84	84	84	84	84	84	84	84	84
Heavy Vehicles, %	29	29	29	36	36	36	2	2	2	2	2	2
Mvmt Flow	12	238	12	12	274	12	12	12	12	12	12	12

Major/Minor	Major1			Major2			Minor1			Minor2		
Conflicting Flow All	286	0	0	250	0	0	583	578	244	584	578	280
Stage 1	-	-	-	-	-	-	268	268	-	304	304	-
Stage 2	-	-	-	-	-	-	315	310	-	280	274	-
Critical Hdwy	4.39	-	-	4.46	-	-	7.12	6.52	6.22	7.12	6.52	6.22
Critical Hdwy Stg 1	-	-	-	-	-	-	6.12	5.52	-	6.12	5.52	-
Critical Hdwy Stg 2	-	-	-	-	-	-	6.12	5.52	-	6.12	5.52	-
Follow-up Hdwy	2.461	-	-	2.524	-	-	3.518	4.018	3.318	3.518	4.018	3.318
Pot Cap-1 Maneuver	1136	-	-	1141	-	-	424	427	795	423	427	759
Stage 1	-	-	-	-	-	-	738	687	-	705	663	-
Stage 2	-	-	-	-	-	-	696	659	-	727	683	-
Platoon blocked, %		-	-		-	-						
Mov Cap-1 Maneuver	1136	-	-	1141	-	-	401	416	795	400	416	759
Mov Cap-2 Maneuver	-	-	-	-	-	-	401	416	-	400	416	-
Stage 1	-	-	-	-	-	-	729	679	-	697	654	-
Stage 2	-	-	-	-	-	-	664	650	-	695	675	-

Approach	EB	WB	NB	SB
HCM Control Delay, s	0.4	0.3	13	13.1
HCM LOS			B	B

Minor Lane/Major Mvmt	NBLn1	EBL	EBT	EBR	WBL	WBT	WBR	SBLn1
Capacity (veh/h)	487	1136	-	-	1141	-	-	482
HCM Lane V/C Ratio	0.073	0.01	-	-	0.01	-	-	0.074
HCM Control Delay (s)	13	8.2	0	-	8.2	0	-	13.1
HCM Lane LOS	B	A	A	-	A	A	-	B
HCM 95th %tile Q(veh)	0.2	0	-	-	0	-	-	0.2

Intersection	
Int Delay, s/veh	1.7

Movement	EBL	EBT	EBR	WBL	WBT	WBR	NBL	NBT	NBR	SBL	SBT	SBR
Vol, veh/h	10	210	20	10	220	10	10	10	10	10	10	10
Conflicting Peds, #/hr	0	0	0	0	0	0	0	0	0	0	0	0
Sign Control	Free	Free	Free	Free	Free	Free	Stop	Stop	Stop	Stop	Stop	Stop
RT Channelized	-	-	None	-	-	None	-	-	None	-	-	None
Storage Length	-	-	-	-	-	-	-	-	-	-	-	-
Veh in Median Storage, #	-	0	-	-	0	-	-	0	-	-	0	-
Grade, %	-	0	-	-	0	-	-	0	-	-	0	-
Peak Hour Factor	92	92	92	92	92	92	92	92	92	92	92	92
Heavy Vehicles, %	26	26	26	36	36	36	2	2	2	2	2	2
Mvmt Flow	11	228	22	11	239	11	11	11	11	11	11	11

Major/Minor	Major1			Major2			Minor1			Minor2		
Conflicting Flow All	250	0	0	250	0	0	538	533	239	538	538	245
Stage 1	-	-	-	-	-	-	261	261	-	266	266	-
Stage 2	-	-	-	-	-	-	277	272	-	272	272	-
Critical Hdwy	4.36	-	-	4.46	-	-	7.12	6.52	6.22	7.12	6.52	6.22
Critical Hdwy Stg 1	-	-	-	-	-	-	6.12	5.52	-	6.12	5.52	-
Critical Hdwy Stg 2	-	-	-	-	-	-	6.12	5.52	-	6.12	5.52	-
Follow-up Hdwy	2.434	-	-	2.524	-	-	3.518	4.018	3.318	3.518	4.018	3.318
Pot Cap-1 Maneuver	1188	-	-	1141	-	-	454	453	800	454	450	794
Stage 1	-	-	-	-	-	-	744	692	-	739	689	-
Stage 2	-	-	-	-	-	-	729	685	-	734	685	-
Platoon blocked, %		-	-		-	-						
Mov Cap-1 Maneuver	1188	-	-	1141	-	-	432	443	800	432	440	794
Mov Cap-2 Maneuver	-	-	-	-	-	-	432	443	-	432	440	-
Stage 1	-	-	-	-	-	-	736	684	-	731	681	-
Stage 2	-	-	-	-	-	-	700	677	-	705	677	-

Approach	EB	WB	NB	SB
HCM Control Delay, s	0.3	0.3	12.5	12.5
HCM LOS			B	B

Minor Lane/Major Mvmt	NBLn1	EBL	EBT	EBR	WBL	WBT	WBR	SBLn1
Capacity (veh/h)	515	1188	-	-	1141	-	-	513
HCM Lane V/C Ratio	0.063	0.009	-	-	0.01	-	-	0.064
HCM Control Delay (s)	12.5	8.1	0	-	8.2	0	-	12.5
HCM Lane LOS	B	A	A	-	A	A	-	B
HCM 95th %tile Q(veh)	0.2	0	-	-	0	-	-	0.2

Intersection	
Int Delay, s/veh	2.2

Movement	EBL	EBT	EBR	WBL	WBT	WBR	NBL	NBT	NBR	SBL	SBT	SBR
Vol, veh/h	10	230	10	10	210	10	10	20	10	20	10	10
Conflicting Peds, #/hr	0	0	0	0	0	0	0	0	0	0	0	0
Sign Control	Free	Free	Free	Free	Free	Free	Stop	Stop	Stop	Stop	Stop	Stop
RT Channelized	-	-	None	-	-	None	-	-	None	-	-	None
Storage Length	-	-	-	-	-	-	-	-	-	-	-	-
Veh in Median Storage, #	-	0	-	-	0	-	-	0	-	-	0	-
Grade, %	-	0	-	-	0	-	-	0	-	-	0	-
Peak Hour Factor	92	92	92	92	92	92	92	92	92	92	92	92
Heavy Vehicles, %	26	26	26	36	36	36	2	2	2	2	2	2
Mvmt Flow	11	250	11	11	228	11	11	22	11	22	11	11

Major/Minor	Major1			Major2			Minor1			Minor2		
Conflicting Flow All	239	0	0	261	0	0	543	538	255	548	538	234
Stage 1	-	-	-	-	-	-	277	277	-	255	255	-
Stage 2	-	-	-	-	-	-	266	261	-	293	283	-
Critical Hdwy	4.36	-	-	4.46	-	-	7.12	6.52	6.22	7.12	6.52	6.22
Critical Hdwy Stg 1	-	-	-	-	-	-	6.12	5.52	-	6.12	5.52	-
Critical Hdwy Stg 2	-	-	-	-	-	-	6.12	5.52	-	6.12	5.52	-
Follow-up Hdwy	2.434	-	-	2.524	-	-	3.518	4.018	3.318	3.518	4.018	3.318
Pot Cap-1 Maneuver	1199	-	-	1130	-	-	451	450	784	447	450	805
Stage 1	-	-	-	-	-	-	729	681	-	749	696	-
Stage 2	-	-	-	-	-	-	739	692	-	715	677	-
Platoon blocked, %		-	-		-	-						
Mov Cap-1 Maneuver	1199	-	-	1130	-	-	429	440	784	417	440	805
Mov Cap-2 Maneuver	-	-	-	-	-	-	429	440	-	417	440	-
Stage 1	-	-	-	-	-	-	721	674	-	741	688	-
Stage 2	-	-	-	-	-	-	710	684	-	675	670	-

Approach	EB	WB	NB	SB
HCM Control Delay, s	0.3	0.4	13	13.2
HCM LOS			B	B

Minor Lane/Major Mvmt	NBLn1	EBL	EBT	EBR	WBL	WBT	WBR	SBLn1
Capacity (veh/h)	491	1199	-	-	1130	-	-	481
HCM Lane V/C Ratio	0.089	0.009	-	-	0.01	-	-	0.09
HCM Control Delay (s)	13	8	0	-	8.2	0	-	13.2
HCM Lane LOS	B	A	A	-	A	A	-	B
HCM 95th %tile Q(veh)	0.3	0	-	-	0	-	-	0.3

Intersection	
Int Delay, s/veh	4.4

Movement	EBL	EBT	EBR	WBL	WBT	WBR	NBL	NBT	NBR	SBL	SBT	SBR
Vol, veh/h	10	210	30	10	200	10	20	40	10	20	70	30
Conflicting Peds, #/hr	0	0	0	0	0	0	0	0	0	0	0	0
Sign Control	Free	Free	Free	Free	Free	Free	Stop	Stop	Stop	Stop	Stop	Stop
RT Channelized	-	-	None	-	-	None	-	-	None	-	-	None
Storage Length	-	-	-	-	-	-	-	-	-	-	-	-
Veh in Median Storage, #	-	0	-	-	0	-	-	0	-	-	0	-
Grade, %	-	0	-	-	0	-	-	0	-	-	0	-
Peak Hour Factor	94	94	94	94	94	94	94	94	94	94	94	94
Heavy Vehicles, %	26	26	26	36	36	36	2	2	2	2	2	2
Mvmt Flow	11	223	32	11	213	11	21	43	11	21	74	32

Major/Minor	Major1			Major2			Minor1			Minor2		
Conflicting Flow All	223	0	0	255	0	0	554	506	239	526	516	218
Stage 1	-	-	-	-	-	-	261	261	-	239	239	-
Stage 2	-	-	-	-	-	-	293	245	-	287	277	-
Critical Hdwy	4.36	-	-	4.46	-	-	7.12	6.52	6.22	7.12	6.52	6.22
Critical Hdwy Stg 1	-	-	-	-	-	-	6.12	5.52	-	6.12	5.52	-
Critical Hdwy Stg 2	-	-	-	-	-	-	6.12	5.52	-	6.12	5.52	-
Follow-up Hdwy	2.434	-	-	2.524	-	-	3.518	4.018	3.318	3.518	4.018	3.318
Pot Cap-1 Maneuver	1216	-	-	1136	-	-	443	469	800	462	463	822
Stage 1	-	-	-	-	-	-	744	692	-	764	708	-
Stage 2	-	-	-	-	-	-	715	703	-	720	681	-
Platoon blocked, %		-	-		-	-						
Mov Cap-1 Maneuver	1216	-	-	1136	-	-	366	459	800	417	453	822
Mov Cap-2 Maneuver	-	-	-	-	-	-	366	459	-	417	453	-
Stage 1	-	-	-	-	-	-	736	684	-	756	700	-
Stage 2	-	-	-	-	-	-	607	695	-	659	674	-

Approach	EB	WB	NB	SB
HCM Control Delay, s	0.3	0.4	14.5	14.6
HCM LOS			B	B

Minor Lane/Major Mvmt	NBLn1	EBL	EBT	EBR	WBL	WBT	WBR	SBLn1
Capacity (veh/h)	454	1216	-	-	1136	-	-	502
HCM Lane V/C Ratio	0.164	0.009	-	-	0.009	-	-	0.254
HCM Control Delay (s)	14.5	8	0	-	8.2	0	-	14.6
HCM Lane LOS	B	A	A	-	A	A	-	B
HCM 95th %tile Q(veh)	0.6	0	-	-	0	-	-	1

Intersection	
Int Delay, s/veh	1.7

Movement	EBL	EBT	EBR	WBL	WBT	WBR	NBL	NBT	NBR	SBL	SBT	SBR
Vol, veh/h	10	220	10	10	200	10	10	10	10	10	10	10
Conflicting Peds, #/hr	0	0	0	0	0	0	0	0	0	0	0	0
Sign Control	Free	Free	Free	Free	Free	Free	Stop	Stop	Stop	Stop	Stop	Stop
RT Channelized	-	-	None	-	-	None	-	-	None	-	-	None
Storage Length	-	-	-	-	-	-	-	-	-	-	-	-
Veh in Median Storage, #	-	0	-	-	0	-	-	0	-	-	0	-
Grade, %	-	0	-	-	0	-	-	0	-	-	0	-
Peak Hour Factor	96	96	96	96	96	96	96	96	96	96	96	96
Heavy Vehicles, %	26	26	26	36	36	36	2	2	2	2	2	2
Mvmt Flow	10	229	10	10	208	10	10	10	10	10	10	10

Major/Minor	Major1			Major2			Minor1			Minor2		
Conflicting Flow All	219	0	0	240	0	0	500	495	234	500	494	214
Stage 1	-	-	-	-	-	-	255	255	-	234	234	-
Stage 2	-	-	-	-	-	-	245	240	-	266	260	-
Critical Hdwy	4.36	-	-	4.46	-	-	7.12	6.52	6.22	7.12	6.52	6.22
Critical Hdwy Stg 1	-	-	-	-	-	-	6.12	5.52	-	6.12	5.52	-
Critical Hdwy Stg 2	-	-	-	-	-	-	6.12	5.52	-	6.12	5.52	-
Follow-up Hdwy	2.434	-	-	2.524	-	-	3.518	4.018	3.318	3.518	4.018	3.318
Pot Cap-1 Maneuver	1221	-	-	1151	-	-	481	476	805	481	476	826
Stage 1	-	-	-	-	-	-	749	696	-	769	711	-
Stage 2	-	-	-	-	-	-	759	707	-	739	693	-
Platoon blocked, %		-	-		-	-						
Mov Cap-1 Maneuver	1221	-	-	1151	-	-	460	467	805	460	467	826
Mov Cap-2 Maneuver	-	-	-	-	-	-	460	467	-	460	467	-
Stage 1	-	-	-	-	-	-	742	690	-	762	704	-
Stage 2	-	-	-	-	-	-	731	700	-	712	687	-

Approach	EB	WB	NB	SB
HCM Control Delay, s	0.3	0.4	12.1	12
HCM LOS			B	B

Minor Lane/Major Mvmt	NBLn1	EBL	EBT	EBR	WBL	WBT	WBR	SBLn1
Capacity (veh/h)	540	1221	-	-	1151	-	-	543
HCM Lane V/C Ratio	0.058	0.009	-	-	0.009	-	-	0.058
HCM Control Delay (s)	12.1	8	0	-	8.2	0	-	12
HCM Lane LOS	B	A	A	-	A	A	-	B
HCM 95th %tile Q(veh)	0.2	0	-	-	0	-	-	0.2

Intersection	
Int Delay, s/veh	3.4

Movement	EBL	EBT	EBR	WBL	WBT	WBR	NBL	NBT	NBR	SBL	SBT	SBR
Vol, veh/h	0	80	170	10	130	0	0	0	0	20	0	80
Conflicting Peds, #/hr	0	0	0	0	0	0	0	0	0	0	0	0
Sign Control	Free	Free	Free	Free	Free	Free	Stop	Stop	Stop	Stop	Stop	Stop
RT Channelized	-	-	Free	-	-	None	-	-	None	-	-	None
Storage Length	-	-	-	135	-	-	-	-	-	-	-	0
Veh in Median Storage, #	-	0	-	-	0	-	-	0	-	-	0	-
Grade, %	-	0	-	-	0	-	-	0	-	-	0	-
Peak Hour Factor	92	92	92	92	92	92	92	92	92	92	92	92
Heavy Vehicles, %	38	38	38	44	44	44	2	2	2	38	2	44
Mvmt Flow	0	87	185	11	141	0	0	0	0	22	0	87

Major/Minor	Major1			Major2			Minor2		
Conflicting Flow All	141	0	-	87	0	0	250	250	141
Stage 1	-	-	-	-	-	-	163	163	-
Stage 2	-	-	-	-	-	-	87	87	-
Critical Hdwy	4.48	-	-	4.54	-	-	6.78	6.52	6.64
Critical Hdwy Stg 1	-	-	-	-	-	-	5.78	5.52	-
Critical Hdwy Stg 2	-	-	-	-	-	-	5.78	5.52	-
Follow-up Hdwy	2.542	-	-	2.596	-	-	3.842	4.018	3.696
Pot Cap-1 Maneuver	1248	-	0	1282	-	-	667	653	807
Stage 1	-	-	0	-	-	-	786	763	-
Stage 2	-	-	0	-	-	-	853	823	-
Platoon blocked, %		-			-	-			
Mov Cap-1 Maneuver	1248	-	-	1282	-	-	661	0	807
Mov Cap-2 Maneuver	-	-	-	-	-	-	661	0	-
Stage 1	-	-	-	-	-	-	779	0	-
Stage 2	-	-	-	-	-	-	853	0	-

Approach	EB	WB	SB
HCM Control Delay, s	0	0.6	10.1
HCM LOS			B

Minor Lane/Major Mvmt	EBL	EBT	WBL	WBT	WBR	SBLn1	SBLn2
Capacity (veh/h)	1248	-	1282	-	-	661	807
HCM Lane V/C Ratio	-	-	0.008	-	-	0.033	0.108
HCM Control Delay (s)	0	-	7.8	-	-	10.6	10
HCM Lane LOS	A	-	A	-	-	B	B
HCM 95th %tile Q(veh)	0	-	0	-	-	0.1	0.4

Intersection	
Int Delay, s/veh	4.1

Movement	EBL	EBT	EBR	WBL	WBT	WBR	NBL	NBT	NBR	SBL	SBT	SBR
Vol, veh/h	0	70	30	0	50	20	90	0	20	0	0	0
Conflicting Peds, #/hr	0	0	0	0	0	0	0	0	0	0	0	0
Sign Control	Free	Free	Free	Free	Free	Free	Stop	Stop	Stop	Stop	Stop	Stop
RT Channelized	-	-	None	-	-	None	-	-	None	-	-	None
Storage Length	-	-	-	-	-	-	0	-	0	-	-	-
Veh in Median Storage, #	-	0	-	-	0	-	-	0	-	-	0	-
Grade, %	-	0	-	-	0	-	-	0	-	-	0	-
Peak Hour Factor	86	86	86	86	86	86	86	86	86	86	86	86
Heavy Vehicles, %	38	38	38	44	44	44	44	2	2	2	2	2
Mvmt Flow	0	81	35	0	58	23	105	0	23	0	0	0

Major/Minor	Major1			Major2			Minor1		
Conflicting Flow All	81	0	0	116	0	0	169	180	99
Stage 1	-	-	-	-	-	-	99	99	-
Stage 2	-	-	-	-	-	-	70	81	-
Critical Hdwy	4.48	-	-	4.54	-	-	6.84	6.52	6.22
Critical Hdwy Stg 1	-	-	-	-	-	-	5.84	5.52	-
Critical Hdwy Stg 2	-	-	-	-	-	-	5.84	5.52	-
Follow-up Hdwy	2.542	-	-	2.596	-	-	3.896	4.018	3.318
Pot Cap-1 Maneuver	1317	-	-	1249	-	-	733	714	957
Stage 1	-	-	-	-	-	-	830	813	-
Stage 2	-	-	-	-	-	-	856	828	-
Platoon blocked, %		-	-		-	-			
Mov Cap-1 Maneuver	1317	-	-	1249	-	-	733	0	957
Mov Cap-2 Maneuver	-	-	-	-	-	-	733	0	-
Stage 1	-	-	-	-	-	-	830	0	-
Stage 2	-	-	-	-	-	-	856	0	-

Approach	EB	WB	NB
HCM Control Delay, s	0	0	10.4
HCM LOS			B

Minor Lane/Major Mvmt	NBLn1	NBLn2	EBL	EBT	EBR	WBL	WBT	WBR
Capacity (veh/h)	733	957	1317	-	-	1249	-	-
HCM Lane V/C Ratio	0.143	0.024	-	-	-	-	-	-
HCM Control Delay (s)	10.7	8.9	0	-	-	0	-	-
HCM Lane LOS	B	A	A	-	-	A	-	-
HCM 95th %tile Q(veh)	0.5	0.1	0	-	-	0	-	-

Intersection	
Int Delay, s/veh	1.9

Movement	EBL	EBT	WBT	WBR	SBL	SBR
Vol, veh/h	80	460	340	70	30	50
Conflicting Peds, #/hr	0	0	0	0	0	0
Sign Control	Free	Free	Free	Free	Stop	Stop
RT Channelized	-	None	-	None	-	None
Storage Length	105	-	-	-	0	-
Veh in Median Storage, #	-	0	0	-	0	-
Grade, %	-	0	0	-	0	-
Peak Hour Factor	86	86	86	86	86	86
Heavy Vehicles, %	35	35	41	41	2	2
Mvmt Flow	93	535	395	81	35	58

Major/Minor	Major1		Major2		Minor2	
Conflicting Flow All	477	0	-	0	889	238
Stage 1	-	-	-	-	436	-
Stage 2	-	-	-	-	453	-
Critical Hdwy	4.8	-	-	-	6.84	6.94
Critical Hdwy Stg 1	-	-	-	-	5.84	-
Critical Hdwy Stg 2	-	-	-	-	5.84	-
Follow-up Hdwy	2.55	-	-	-	3.52	3.32
Pot Cap-1 Maneuver	881	-	-	-	283	763
Stage 1	-	-	-	-	619	-
Stage 2	-	-	-	-	607	-
Platoon blocked, %		-	-	-		
Mov Cap-1 Maneuver	881	-	-	-	253	763
Mov Cap-2 Maneuver	-	-	-	-	253	-
Stage 1	-	-	-	-	619	-
Stage 2	-	-	-	-	543	-

Approach	EB	WB	SB
HCM Control Delay, s	1.4	0	15.5
HCM LOS			C

Minor Lane/Major Mvmt	EBL	EBT	WBT	WBR	SBLn1
Capacity (veh/h)	881	-	-	-	435
HCM Lane V/C Ratio	0.106	-	-	-	0.214
HCM Control Delay (s)	9.6	-	-	-	15.5
HCM Lane LOS	A	-	-	-	C
HCM 95th %tile Q(veh)	0.4	-	-	-	0.8

Intersection	
Int Delay, s/veh	2.7

Movement	EBT	EBR	WBL	WBT	NBL	NBR
Vol, veh/h	340	60	10	330	70	60
Conflicting Peds, #/hr	0	0	0	0	0	0
Sign Control	Free	Free	Free	Free	Stop	Stop
RT Channelized	-	None	-	None	-	None
Storage Length	-	-	-	-	0	-
Veh in Median Storage, #	0	-	-	0	0	-
Grade, %	0	-	-	0	0	-
Peak Hour Factor	90	90	90	90	90	90
Heavy Vehicles, %	35	35	41	41	2	2
Mvmt Flow	378	67	11	367	78	67

Major/Minor	Major1		Major2		Minor1	
Conflicting Flow All	0	0	444	0	800	411
Stage 1	-	-	-	-	411	-
Stage 2	-	-	-	-	389	-
Critical Hdwy	-	-	4.51	-	6.42	6.22
Critical Hdwy Stg 1	-	-	-	-	5.42	-
Critical Hdwy Stg 2	-	-	-	-	5.42	-
Follow-up Hdwy	-	-	2.569	-	3.518	3.318
Pot Cap-1 Maneuver	-	-	937	-	354	641
Stage 1	-	-	-	-	669	-
Stage 2	-	-	-	-	685	-
Platoon blocked, %	-	-		-		
Mov Cap-1 Maneuver	-	-	937	-	349	641
Mov Cap-2 Maneuver	-	-	-	-	349	-
Stage 1	-	-	-	-	669	-
Stage 2	-	-	-	-	675	-

Approach	EB	WB	NB
HCM Control Delay, s	0	0.3	17
HCM LOS			C

Minor Lane/Major Mvmt	NBLn1	EBT	EBR	WBL	WBT
Capacity (veh/h)	442	-	-	937	-
HCM Lane V/C Ratio	0.327	-	-	0.012	-
HCM Control Delay (s)	17	-	-	8.9	0
HCM Lane LOS	C	-	-	A	A
HCM 95th %tile Q(veh)	1.4	-	-	0	-

Intersection	
Int Delay, s/veh	1.1

Movement	EBL	EBT	WBT	WBR	SBL	SBR
Vol, veh/h	10	390	310	10	20	30
Conflicting Peds, #/hr	0	0	0	0	0	0
Sign Control	Free	Free	Free	Free	Stop	Stop
RT Channelized	-	None	-	None	-	None
Storage Length	-	-	-	-	0	-
Veh in Median Storage, #	-	0	0	-	0	-
Grade, %	-	0	0	-	0	-
Peak Hour Factor	77	77	77	77	77	77
Heavy Vehicles, %	30	30	38	38	2	2
Mvmt Flow	13	506	403	13	26	39

Major/Minor	Major1		Major2		Minor2	
Conflicting Flow All	416	0	-	0	941	409
Stage 1	-	-	-	-	409	-
Stage 2	-	-	-	-	532	-
Critical Hdwy	4.4	-	-	-	6.42	6.22
Critical Hdwy Stg 1	-	-	-	-	5.42	-
Critical Hdwy Stg 2	-	-	-	-	5.42	-
Follow-up Hdwy	2.47	-	-	-	3.518	3.318
Pot Cap-1 Maneuver	1008	-	-	-	292	642
Stage 1	-	-	-	-	671	-
Stage 2	-	-	-	-	589	-
Platoon blocked, %		-	-	-		
Mov Cap-1 Maneuver	1008	-	-	-	287	642
Mov Cap-2 Maneuver	-	-	-	-	287	-
Stage 1	-	-	-	-	671	-
Stage 2	-	-	-	-	578	-

Approach	EB	WB	SB
HCM Control Delay, s	0.2	0	14.9
HCM LOS			B

Minor Lane/Major Mvmt	EBL	EBT	WBT	WBR	SBLn1
Capacity (veh/h)	1008	-	-	-	429
HCM Lane V/C Ratio	0.013	-	-	-	0.151
HCM Control Delay (s)	8.6	0	-	-	14.9
HCM Lane LOS	A	A	-	-	B
HCM 95th %tile Q(veh)	0	-	-	-	0.5

Intersection	
Int Delay, s/veh	2.4

Movement	EBL	EBT	WBT	WBR	SBL	SBR
Vol, veh/h	30	280	220	10	20	100
Conflicting Peds, #/hr	0	0	0	0	0	0
Sign Control	Free	Free	Free	Free	Stop	Stop
RT Channelized	-	None	-	None	-	None
Storage Length	-	-	-	-	0	-
Veh in Median Storage, #	-	0	0	-	0	-
Grade, %	-	0	0	-	0	-
Peak Hour Factor	90	90	90	90	90	90
Heavy Vehicles, %	30	30	38	38	2	2
Mvmt Flow	33	311	244	11	22	111

Major/Minor	Major1		Major2		Minor2	
Conflicting Flow All	256	0	-	0	628	250
Stage 1	-	-	-	-	250	-
Stage 2	-	-	-	-	378	-
Critical Hdwy	4.4	-	-	-	6.42	6.22
Critical Hdwy Stg 1	-	-	-	-	5.42	-
Critical Hdwy Stg 2	-	-	-	-	5.42	-
Follow-up Hdwy	2.47	-	-	-	3.518	3.318
Pot Cap-1 Maneuver	1162	-	-	-	447	789
Stage 1	-	-	-	-	792	-
Stage 2	-	-	-	-	693	-
Platoon blocked, %		-	-	-		
Mov Cap-1 Maneuver	1162	-	-	-	432	789
Mov Cap-2 Maneuver	-	-	-	-	432	-
Stage 1	-	-	-	-	792	-
Stage 2	-	-	-	-	669	-

Approach	EB	WB	SB
HCM Control Delay, s	0.8	0	11.4
HCM LOS			B

Minor Lane/Major Mvmt	EBL	EBT	WBT	WBR	SBLn1
Capacity (veh/h)	1162	-	-	-	693
HCM Lane V/C Ratio	0.029	-	-	-	0.192
HCM Control Delay (s)	8.2	0	-	-	11.4
HCM Lane LOS	A	A	-	-	B
HCM 95th %tile Q(veh)	0.1	-	-	-	0.7

Intersection	
Int Delay, s/veh	2.2

Movement	EBL	EBT	WBT	WBR	SBL	SBR
Vol, veh/h	80	220	180	10	10	40
Conflicting Peds, #/hr	0	0	0	0	0	0
Sign Control	Free	Free	Free	Free	Stop	Stop
RT Channelized	-	None	-	None	-	None
Storage Length	-	-	-	-	0	-
Veh in Median Storage, #	-	0	0	-	0	-
Grade, %	-	0	0	-	0	-
Peak Hour Factor	92	92	92	92	92	92
Heavy Vehicles, %	30	30	37	37	2	2
Mvmt Flow	87	239	196	11	11	43

Major/Minor	Major1		Major2		Minor2	
Conflicting Flow All	207	0	-	0	614	201
Stage 1	-	-	-	-	201	-
Stage 2	-	-	-	-	413	-
Critical Hdwy	4.4	-	-	-	6.42	6.22
Critical Hdwy Stg 1	-	-	-	-	5.42	-
Critical Hdwy Stg 2	-	-	-	-	5.42	-
Follow-up Hdwy	2.47	-	-	-	3.518	3.318
Pot Cap-1 Maneuver	1214	-	-	-	455	840
Stage 1	-	-	-	-	833	-
Stage 2	-	-	-	-	668	-
Platoon blocked, %		-	-	-		
Mov Cap-1 Maneuver	1214	-	-	-	417	840
Mov Cap-2 Maneuver	-	-	-	-	417	-
Stage 1	-	-	-	-	833	-
Stage 2	-	-	-	-	613	-

Approach	EB	WB	SB
HCM Control Delay, s	2.2	0	10.6
HCM LOS			B

Minor Lane/Major Mvmt	EBL	EBT	WBT	WBR	SBLn1
Capacity (veh/h)	1214	-	-	-	698
HCM Lane V/C Ratio	0.072	-	-	-	0.078
HCM Control Delay (s)	8.2	0	-	-	10.6
HCM Lane LOS	A	A	-	-	B
HCM 95th %tile Q(veh)	0.2	-	-	-	0.3

Intersection	
Int Delay, s/veh	1.4

Movement	EBL	EBT	WBT	WBR	SBL	SBR
Vol, veh/h	10	220	180	60	40	10
Conflicting Peds, #/hr	0	0	0	0	0	0
Sign Control	Free	Free	Free	Free	Stop	Stop
RT Channelized	-	None	-	None	-	None
Storage Length	-	-	-	-	0	-
Veh in Median Storage, #	-	0	0	-	0	-
Grade, %	-	0	0	-	0	-
Peak Hour Factor	88	88	88	88	88	88
Heavy Vehicles, %	30	30	37	37	2	2
Mvmt Flow	11	250	205	68	45	11

Major/Minor	Major1		Major2		Minor2	
Conflicting Flow All	273	0	-	0	512	239
Stage 1	-	-	-	-	239	-
Stage 2	-	-	-	-	273	-
Critical Hdwy	4.4	-	-	-	6.42	6.22
Critical Hdwy Stg 1	-	-	-	-	5.42	-
Critical Hdwy Stg 2	-	-	-	-	5.42	-
Follow-up Hdwy	2.47	-	-	-	3.518	3.318
Pot Cap-1 Maneuver	1145	-	-	-	522	800
Stage 1	-	-	-	-	801	-
Stage 2	-	-	-	-	773	-
Platoon blocked, %		-	-	-		
Mov Cap-1 Maneuver	1145	-	-	-	516	800
Mov Cap-2 Maneuver	-	-	-	-	516	-
Stage 1	-	-	-	-	801	-
Stage 2	-	-	-	-	764	-

Approach	EB	WB	SB
HCM Control Delay, s	0.4	0	12.2
HCM LOS			B

Minor Lane/Major Mvmt	EBL	EBT	WBT	WBR	SBLn1
Capacity (veh/h)	1145	-	-	-	555
HCM Lane V/C Ratio	0.01	-	-	-	0.102
HCM Control Delay (s)	8.2	0	-	-	12.2
HCM Lane LOS	A	A	-	-	B
HCM 95th %tile Q(veh)	0	-	-	-	0.3

Intersection	
Int Delay, s/veh	11.1

Movement	EBL	EBT	EBR	WBL	WBT	WBR	NBL	NBT	NBR	SBL	SBT	SBR
Vol, veh/h	10	250	30	30	210	20	110	90	30	10	40	10
Conflicting Peds, #/hr	0	0	0	0	0	0	0	0	0	0	0	0
Sign Control	Free	Free	Free	Free	Free	Free	Stop	Stop	Stop	Stop	Stop	Stop
RT Channelized	-	-	None	-	-	None	-	-	None	-	-	None
Storage Length	-	-	-	-	-	-	-	-	-	-	-	-
Veh in Median Storage, #	-	0	-	-	0	-	-	0	-	-	0	-
Grade, %	-	0	-	-	0	-	-	0	-	-	0	-
Peak Hour Factor	89	89	89	89	89	89	89	89	89	89	89	89
Heavy Vehicles, %	30	30	30	39	39	39	2	2	2	2	2	2
Mvmt Flow	11	281	34	34	236	22	124	101	34	11	45	11

Major/Minor	Major1			Major2			Minor1			Minor2		
Conflicting Flow All	258	0	0	315	0	0	663	646	298	703	652	247
Stage 1	-	-	-	-	-	-	320	320	-	315	315	-
Stage 2	-	-	-	-	-	-	343	326	-	388	337	-
Critical Hdwy	4.4	-	-	4.49	-	-	7.12	6.52	6.22	7.12	6.52	6.22
Critical Hdwy Stg 1	-	-	-	-	-	-	6.12	5.52	-	6.12	5.52	-
Critical Hdwy Stg 2	-	-	-	-	-	-	6.12	5.52	-	6.12	5.52	-
Follow-up Hdwy	2.47	-	-	2.551	-	-	3.518	4.018	3.318	3.518	4.018	3.318
Pot Cap-1 Maneuver	1160	-	-	1063	-	-	375	390	741	352	387	792
Stage 1	-	-	-	-	-	-	692	652	-	696	656	-
Stage 2	-	-	-	-	-	-	672	648	-	636	641	-
Platoon blocked, %		-	-		-	-						
Mov Cap-1 Maneuver	1160	-	-	1063	-	-	323	371	741	256	368	792
Mov Cap-2 Maneuver	-	-	-	-	-	-	323	371	-	256	368	-
Stage 1	-	-	-	-	-	-	684	644	-	688	632	-
Stage 2	-	-	-	-	-	-	593	624	-	506	633	-

Approach	EB	WB	NB	SB
HCM Control Delay, s	0.3	1	34.6	16.7
HCM LOS			D	C

Minor Lane/Major Mvmt	NBLn1	EBL	EBT	EBR	WBL	WBT	WBR	SBLn1
Capacity (veh/h)	369	1160	-	-	1063	-	-	374
HCM Lane V/C Ratio	0.7	0.01	-	-	0.032	-	-	0.18
HCM Control Delay (s)	34.6	8.1	0	-	8.5	0	-	16.7
HCM Lane LOS	D	A	A	-	A	A	-	C
HCM 95th %tile Q(veh)	5.1	0	-	-	0.1	-	-	0.6

Intersection	
Int Delay, s/veh	1.3

Movement	EBL	EBT	WBT	WBR	SBL	SBR
Vol, veh/h	20	260	250	80	40	10
Conflicting Peds, #/hr	0	0	0	0	0	0
Sign Control	Free	Free	Free	Free	Stop	Stop
RT Channelized	-	None	-	None	-	None
Storage Length	-	-	-	-	0	-
Veh in Median Storage, #	-	0	0	-	0	-
Grade, %	-	0	0	-	0	-
Peak Hour Factor	98	98	98	98	98	98
Heavy Vehicles, %	30	30	39	39	2	2
Mvmt Flow	20	265	255	82	41	10

Major/Minor	Major1		Major2		Minor2	
Conflicting Flow All	337	0	-	0	602	296
Stage 1	-	-	-	-	296	-
Stage 2	-	-	-	-	306	-
Critical Hdwy	4.4	-	-	-	6.42	6.22
Critical Hdwy Stg 1	-	-	-	-	5.42	-
Critical Hdwy Stg 2	-	-	-	-	5.42	-
Follow-up Hdwy	2.47	-	-	-	3.518	3.318
Pot Cap-1 Maneuver	1081	-	-	-	463	743
Stage 1	-	-	-	-	755	-
Stage 2	-	-	-	-	747	-
Platoon blocked, %		-	-	-		
Mov Cap-1 Maneuver	1081	-	-	-	453	743
Mov Cap-2 Maneuver	-	-	-	-	453	-
Stage 1	-	-	-	-	755	-
Stage 2	-	-	-	-	731	-

Approach	EB	WB	SB
HCM Control Delay, s	0.6	0	13.2
HCM LOS			B

Minor Lane/Major Mvmt	EBL	EBT	WBT	WBR	SBLn1
Capacity (veh/h)	1081	-	-	-	491
HCM Lane V/C Ratio	0.019	-	-	-	0.104
HCM Control Delay (s)	8.4	0	-	-	13.2
HCM Lane LOS	A	A	-	-	B
HCM 95th %tile Q(veh)	0.1	-	-	-	0.3

Intersection	
Int Delay, s/veh	0.6

Movement	EBL	EBT	WBT	WBR	SBL	SBR
Vol, veh/h	10	270	250	20	10	10
Conflicting Peds, #/hr	0	0	0	0	0	0
Sign Control	Free	Free	Free	Free	Stop	Stop
RT Channelized	-	None	-	None	-	None
Storage Length	-	-	-	-	0	-
Veh in Median Storage, #	-	0	0	-	0	-
Grade, %	-	0	0	-	0	-
Peak Hour Factor	93	93	93	93	93	93
Heavy Vehicles, %	33	33	41	41	2	2
Mvmt Flow	11	290	269	22	11	11

Major/Minor	Major1		Major2		Minor2	
Conflicting Flow All	290	0	-	0	592	280
Stage 1	-	-	-	-	280	-
Stage 2	-	-	-	-	312	-
Critical Hdwy	4.43	-	-	-	6.42	6.22
Critical Hdwy Stg 1	-	-	-	-	5.42	-
Critical Hdwy Stg 2	-	-	-	-	5.42	-
Follow-up Hdwy	2.497	-	-	-	3.518	3.318
Pot Cap-1 Maneuver	1114	-	-	-	469	759
Stage 1	-	-	-	-	767	-
Stage 2	-	-	-	-	742	-
Platoon blocked, %		-	-	-		
Mov Cap-1 Maneuver	1114	-	-	-	463	759
Mov Cap-2 Maneuver	-	-	-	-	463	-
Stage 1	-	-	-	-	767	-
Stage 2	-	-	-	-	733	-

Approach	EB	WB	SB
HCM Control Delay, s	0.3	0	11.5
HCM LOS			B

Minor Lane/Major Mvmt	EBL	EBT	WBT	WBR	SBLn1
Capacity (veh/h)	1114	-	-	-	575
HCM Lane V/C Ratio	0.01	-	-	-	0.037
HCM Control Delay (s)	8.3	0	-	-	11.5
HCM Lane LOS	A	A	-	-	B
HCM 95th %tile Q(veh)	0	-	-	-	0.1

Intersection	
Int Delay, s/veh	2.4

Movement	EBL	EBT	EBR	WBL	WBT	WBR	NBL	NBT	NBR	SBL	SBT	SBR
Vol, veh/h	10	260	10	20	220	10	30	10	20	10	10	10
Conflicting Peds, #/hr	0	0	0	0	0	0	0	0	0	0	0	0
Sign Control	Free	Free	Free	Free	Free	Free	Stop	Stop	Stop	Stop	Stop	Stop
RT Channelized	-	-	None	-	-	None	-	-	None	-	-	None
Storage Length	-	-	-	-	-	-	-	-	-	-	-	-
Veh in Median Storage, #	-	0	-	-	0	-	-	0	-	-	0	-
Grade, %	-	0	-	-	0	-	-	0	-	-	0	-
Peak Hour Factor	94	94	94	94	94	94	94	94	94	94	94	94
Heavy Vehicles, %	33	33	33	41	41	41	2	2	2	2	2	2
Mvmt Flow	11	277	11	21	234	11	32	11	21	11	11	11

Major/Minor	Major1			Major2			Minor1			Minor2		
Conflicting Flow All	245	0	0	287	0	0	596	590	282	601	591	239
Stage 1	-	-	-	-	-	-	303	303	-	282	282	-
Stage 2	-	-	-	-	-	-	293	287	-	319	309	-
Critical Hdwy	4.43	-	-	4.51	-	-	7.12	6.52	6.22	7.12	6.52	6.22
Critical Hdwy Stg 1	-	-	-	-	-	-	6.12	5.52	-	6.12	5.52	-
Critical Hdwy Stg 2	-	-	-	-	-	-	6.12	5.52	-	6.12	5.52	-
Follow-up Hdwy	2.497	-	-	2.569	-	-	3.518	4.018	3.318	3.518	4.018	3.318
Pot Cap-1 Maneuver	1160	-	-	1082	-	-	415	420	757	412	420	800
Stage 1	-	-	-	-	-	-	706	664	-	725	678	-
Stage 2	-	-	-	-	-	-	715	674	-	693	660	-
Platoon blocked, %		-	-		-	-						
Mov Cap-1 Maneuver	1160	-	-	1082	-	-	391	406	757	383	406	800
Mov Cap-2 Maneuver	-	-	-	-	-	-	391	406	-	383	406	-
Stage 1	-	-	-	-	-	-	698	657	-	717	663	-
Stage 2	-	-	-	-	-	-	679	659	-	655	653	-

Approach	EB	WB	NB	SB
HCM Control Delay, s	0.3	0.7	13.9	13.1
HCM LOS			B	B

Minor Lane/Major Mvmt	NBLn1	EBL	EBT	EBR	WBL	WBT	WBR	SBLn1
Capacity (veh/h)	470	1160	-	-	1082	-	-	474
HCM Lane V/C Ratio	0.136	0.009	-	-	0.02	-	-	0.067
HCM Control Delay (s)	13.9	8.1	0	-	8.4	0	-	13.1
HCM Lane LOS	B	A	A	-	A	A	-	B
HCM 95th %tile Q(veh)	0.5	0	-	-	0.1	-	-	0.2

Intersection	
Int Delay, s/veh	1.8

Movement	EBL	EBT	EBR	WBL	WBT	WBR	NBL	NBT	NBR	SBL	SBT	SBR
Vol, veh/h	10	290	10	10	210	20	10	10	10	10	10	10
Conflicting Peds, #/hr	0	0	0	0	0	0	0	0	0	0	0	0
Sign Control	Free	Free	Free	Free	Free	Free	Stop	Stop	Stop	Stop	Stop	Stop
RT Channelized	-	-	None	-	-	None	-	-	None	-	-	None
Storage Length	-	-	-	-	-	-	-	-	-	-	-	-
Veh in Median Storage, #	-	0	-	-	0	-	-	0	-	-	0	-
Grade, %	-	0	-	-	0	-	-	0	-	-	0	-
Peak Hour Factor	78	78	78	78	78	78	78	78	78	78	78	78
Heavy Vehicles, %	31	31	31	39	39	39	2	2	2	2	2	2
Mvmt Flow	13	372	13	13	269	26	13	13	13	13	13	13

Major/Minor	Major1			Major2			Minor1			Minor2		
Conflicting Flow All	295	0	0	385	0	0	725	725	378	725	718	282
Stage 1	-	-	-	-	-	-	404	404	-	308	308	-
Stage 2	-	-	-	-	-	-	321	321	-	417	410	-
Critical Hdwy	4.41	-	-	4.49	-	-	7.12	6.52	6.22	7.12	6.52	6.22
Critical Hdwy Stg 1	-	-	-	-	-	-	6.12	5.52	-	6.12	5.52	-
Critical Hdwy Stg 2	-	-	-	-	-	-	6.12	5.52	-	6.12	5.52	-
Follow-up Hdwy	2.479	-	-	2.551	-	-	3.518	4.018	3.318	3.518	4.018	3.318
Pot Cap-1 Maneuver	1118	-	-	998	-	-	340	352	669	340	355	757
Stage 1	-	-	-	-	-	-	623	599	-	702	660	-
Stage 2	-	-	-	-	-	-	691	652	-	613	595	-
Platoon blocked, %		-	-		-	-						
Mov Cap-1 Maneuver	1118	-	-	998	-	-	317	341	669	316	344	757
Mov Cap-2 Maneuver	-	-	-	-	-	-	317	341	-	316	344	-
Stage 1	-	-	-	-	-	-	614	590	-	691	649	-
Stage 2	-	-	-	-	-	-	655	642	-	579	586	-

Approach	EB	WB	NB	SB
HCM Control Delay, s	0.3	0.4	15.1	14.8
HCM LOS			C	B

Minor Lane/Major Mvmt	NBLn1	EBL	EBT	EBR	WBL	WBT	WBR	SBLn1
Capacity (veh/h)	396	1118	-	-	998	-	-	406
HCM Lane V/C Ratio	0.097	0.011	-	-	0.013	-	-	0.095
HCM Control Delay (s)	15.1	8.3	0	-	8.7	0	-	14.8
HCM Lane LOS	C	A	A	-	A	A	-	B
HCM 95th %tile Q(veh)	0.3	0	-	-	0	-	-	0.3

Intersection	
Int Delay, s/veh	3.6

Movement	EBL	EBT	EBR	WBL	WBT	WBR	NBL	NBT	NBR	SBL	SBT	SBR
Vol, veh/h	20	260	20	10	170	40	20	10	10	40	20	50
Conflicting Peds, #/hr	0	0	0	0	0	0	0	0	0	0	0	0
Sign Control	Free	Free	Free	Free	Free	Free	Stop	Stop	Stop	Stop	Stop	Stop
RT Channelized	-	-	None	-	-	None	-	-	None	-	-	None
Storage Length	-	-	-	-	-	-	-	-	-	-	-	-
Veh in Median Storage, #	-	0	-	-	0	-	-	0	-	-	0	-
Grade, %	-	0	-	-	0	-	-	0	-	-	0	-
Peak Hour Factor	89	89	89	89	89	89	89	89	89	89	89	89
Heavy Vehicles, %	31	31	31	39	39	39	2	2	2	2	2	2
Mvmt Flow	22	292	22	11	191	45	22	11	11	45	22	56

Major/Minor	Major1			Major2			Minor1			Minor2		
Conflicting Flow All	236	0	0	315	0	0	623	606	303	596	596	213
Stage 1	-	-	-	-	-	-	348	348	-	236	236	-
Stage 2	-	-	-	-	-	-	275	258	-	360	360	-
Critical Hdwy	4.41	-	-	4.49	-	-	7.12	6.52	6.22	7.12	6.52	6.22
Critical Hdwy Stg 1	-	-	-	-	-	-	6.12	5.52	-	6.12	5.52	-
Critical Hdwy Stg 2	-	-	-	-	-	-	6.12	5.52	-	6.12	5.52	-
Follow-up Hdwy	2.479	-	-	2.551	-	-	3.518	4.018	3.318	3.518	4.018	3.318
Pot Cap-1 Maneuver	1178	-	-	1063	-	-	398	411	737	415	417	827
Stage 1	-	-	-	-	-	-	668	634	-	767	710	-
Stage 2	-	-	-	-	-	-	731	694	-	658	626	-
Platoon blocked, %		-	-		-	-						
Mov Cap-1 Maneuver	1178	-	-	1063	-	-	346	397	737	389	403	827
Mov Cap-2 Maneuver	-	-	-	-	-	-	346	397	-	389	403	-
Stage 1	-	-	-	-	-	-	653	619	-	749	701	-
Stage 2	-	-	-	-	-	-	652	686	-	622	612	-

Approach	EB	WB	NB	SB
HCM Control Delay, s	0.5	0.4	14.8	14.1
HCM LOS			B	B

Minor Lane/Major Mvmt	NBLn1	EBL	EBT	EBR	WBL	WBT	WBR	SBLn1
Capacity (veh/h)	414	1178	-	-	1063	-	-	517
HCM Lane V/C Ratio	0.109	0.019	-	-	0.011	-	-	0.239
HCM Control Delay (s)	14.8	8.1	0	-	8.4	0	-	14.1
HCM Lane LOS	B	A	A	-	A	A	-	B
HCM 95th %tile Q(veh)	0.4	0.1	-	-	0	-	-	0.9

Intersection	
Int Delay, s/veh	1.8

Movement	EBL	EBT	EBR	WBL	WBT	WBR	NBL	NBT	NBR	SBL	SBT	SBR
Vol, veh/h	10	290	10	10	230	20	10	10	10	20	10	10
Conflicting Peds, #/hr	0	0	0	0	0	0	0	0	0	0	0	0
Sign Control	Free	Free	Free	Free	Free	Free	Stop	Stop	Stop	Stop	Stop	Stop
RT Channelized	-	-	None	-	-	None	-	-	None	-	-	None
Storage Length	-	-	-	-	-	-	-	-	-	-	-	-
Veh in Median Storage, #	-	0	-	-	0	-	-	0	-	-	0	-
Grade, %	-	0	-	-	0	-	-	0	-	-	0	-
Peak Hour Factor	95	95	95	95	95	95	95	95	95	95	95	95
Heavy Vehicles, %	29	29	29	36	36	36	2	2	2	2	2	2
Mvmt Flow	11	305	11	11	242	21	11	11	11	21	11	11

Major/Minor	Major1			Major2			Minor1			Minor2		
Conflicting Flow All	263	0	0	316	0	0	616	616	311	616	611	253
Stage 1	-	-	-	-	-	-	332	332	-	274	274	-
Stage 2	-	-	-	-	-	-	284	284	-	342	337	-
Critical Hdwy	4.39	-	-	4.46	-	-	7.12	6.52	6.22	7.12	6.52	6.22
Critical Hdwy Stg 1	-	-	-	-	-	-	6.12	5.52	-	6.12	5.52	-
Critical Hdwy Stg 2	-	-	-	-	-	-	6.12	5.52	-	6.12	5.52	-
Follow-up Hdwy	2.461	-	-	2.524	-	-	3.518	4.018	3.318	3.518	4.018	3.318
Pot Cap-1 Maneuver	1160	-	-	1075	-	-	403	406	729	403	409	786
Stage 1	-	-	-	-	-	-	681	644	-	732	683	-
Stage 2	-	-	-	-	-	-	723	676	-	673	641	-
Platoon blocked, %		-	-		-	-						
Mov Cap-1 Maneuver	1160	-	-	1075	-	-	383	396	729	382	399	786
Mov Cap-2 Maneuver	-	-	-	-	-	-	383	396	-	382	399	-
Stage 1	-	-	-	-	-	-	673	636	-	723	675	-
Stage 2	-	-	-	-	-	-	694	668	-	644	633	-

Approach	EB	WB	NB	SB
HCM Control Delay, s	0.3	0.3	13.4	14
HCM LOS			B	B

Minor Lane/Major Mvmt	NBLn1	EBL	EBT	EBR	WBL	WBT	WBR	SBLn1
Capacity (veh/h)	461	1160	-	-	1075	-	-	444
HCM Lane V/C Ratio	0.069	0.009	-	-	0.01	-	-	0.095
HCM Control Delay (s)	13.4	8.1	0	-	8.4	0	-	14
HCM Lane LOS	B	A	A	-	A	A	-	B
HCM 95th %tile Q(veh)	0.2	0	-	-	0	-	-	0.3

Intersection	
Int Delay, s/veh	4.3

Movement	EBL	EBT	EBR	WBL	WBT	WBR	NBL	NBT	NBR	SBL	SBT	SBR
Vol, veh/h	20	280	10	10	210	30	20	40	20	30	40	10
Conflicting Peds, #/hr	0	0	0	0	0	0	0	0	0	0	0	0
Sign Control	Free	Free	Free	Free	Free	Free	Stop	Stop	Stop	Stop	Stop	Stop
RT Channelized	-	-	None	-	-	None	-	-	None	-	-	None
Storage Length	-	-	-	-	-	-	-	-	-	-	-	-
Veh in Median Storage, #	-	0	-	-	0	-	-	0	-	-	0	-
Grade, %	-	0	-	-	0	-	-	0	-	-	0	-
Peak Hour Factor	86	86	86	86	86	86	86	86	86	86	86	86
Heavy Vehicles, %	29	29	29	36	36	36	2	2	2	2	2	2
Mvmt Flow	23	326	12	12	244	35	23	47	23	35	47	12

Major/Minor	Major1			Major2			Minor1			Minor2		
Conflicting Flow All	279	0	0	337	0	0	692	680	331	698	669	262
Stage 1	-	-	-	-	-	-	378	378	-	285	285	-
Stage 2	-	-	-	-	-	-	314	302	-	413	384	-
Critical Hdwy	4.39	-	-	4.46	-	-	7.12	6.52	6.22	7.12	6.52	6.22
Critical Hdwy Stg 1	-	-	-	-	-	-	6.12	5.52	-	6.12	5.52	-
Critical Hdwy Stg 2	-	-	-	-	-	-	6.12	5.52	-	6.12	5.52	-
Follow-up Hdwy	2.461	-	-	2.524	-	-	3.518	4.018	3.318	3.518	4.018	3.318
Pot Cap-1 Maneuver	1143	-	-	1055	-	-	358	373	711	355	379	777
Stage 1	-	-	-	-	-	-	644	615	-	722	676	-
Stage 2	-	-	-	-	-	-	697	664	-	616	611	-
Platoon blocked, %		-	-		-	-						
Mov Cap-1 Maneuver	1143	-	-	1055	-	-	309	359	711	300	364	777
Mov Cap-2 Maneuver	-	-	-	-	-	-	309	359	-	300	364	-
Stage 1	-	-	-	-	-	-	628	600	-	704	667	-
Stage 2	-	-	-	-	-	-	630	655	-	536	596	-

Approach	EB	WB	NB	SB
HCM Control Delay, s	0.5	0.3	17	18.5
HCM LOS			C	C

Minor Lane/Major Mvmt	NBLn1	EBL	EBT	EBR	WBL	WBT	WBR	SBLn1
Capacity (veh/h)	392	1143	-	-	1055	-	-	359
HCM Lane V/C Ratio	0.237	0.02	-	-	0.011	-	-	0.259
HCM Control Delay (s)	17	8.2	0	-	8.4	0	-	18.5
HCM Lane LOS	C	A	A	-	A	A	-	C
HCM 95th %tile Q(veh)	0.9	0.1	-	-	0	-	-	1

Intersection	
Int Delay, s/veh	1.6

Movement	EBL	EBT	EBR	WBL	WBT	WBR	NBL	NBT	NBR	SBL	SBT	SBR
Vol, veh/h	10	310	10	10	250	10	10	10	10	10	10	10
Conflicting Peds, #/hr	0	0	0	10	0	0	0	0	0	0	0	0
Sign Control	Free	Free	Free	Free	Free	Free	Stop	Stop	Stop	Stop	Stop	Stop
RT Channelized	-	-	None	-	-	None	-	-	None	-	-	None
Storage Length	-	-	-	-	-	-	-	-	-	-	-	-
Veh in Median Storage, #	-	0	-	-	0	-	-	0	-	-	0	-
Grade, %	-	0	-	-	0	-	-	0	-	-	0	-
Peak Hour Factor	84	84	84	84	84	84	84	84	84	84	84	84
Heavy Vehicles, %	29	29	29	36	36	36	2	2	2	2	2	2
Mvmt Flow	12	369	12	12	298	12	12	12	12	12	12	12

Major/Minor	Major1			Major2			Minor1			Minor2		
Conflicting Flow All	310	0	0	381	0	0	738	732	385	738	732	304
Stage 1	-	-	-	-	-	-	399	399	-	327	327	-
Stage 2	-	-	-	-	-	-	339	333	-	411	405	-
Critical Hdwy	4.39	-	-	4.46	-	-	7.12	6.52	6.22	7.12	6.52	6.22
Critical Hdwy Stg 1	-	-	-	-	-	-	6.12	5.52	-	6.12	5.52	-
Critical Hdwy Stg 2	-	-	-	-	-	-	6.12	5.52	-	6.12	5.52	-
Follow-up Hdwy	2.461	-	-	2.524	-	-	3.518	4.018	3.318	3.518	4.018	3.318
Pot Cap-1 Maneuver	1112	-	-	1014	-	-	334	348	663	334	348	736
Stage 1	-	-	-	-	-	-	627	602	-	686	648	-
Stage 2	-	-	-	-	-	-	676	644	-	618	598	-
Platoon blocked, %		-	-		-	-						
Mov Cap-1 Maneuver	1112	-	-	1006	-	-	313	338	657	310	338	736
Mov Cap-2 Maneuver	-	-	-	-	-	-	313	338	-	310	338	-
Stage 1	-	-	-	-	-	-	618	594	-	676	639	-
Stage 2	-	-	-	-	-	-	644	635	-	581	590	-

Approach	EB	WB	NB	SB
HCM Control Delay, s	0.3	0.3	15.1	14.9
HCM LOS			C	B

Minor Lane/Major Mvmt	NBLn1	EBL	EBT	EBR	WBL	WBT	WBR	SBLn1
Capacity (veh/h)	391	1112	-	-	1006	-	-	398
HCM Lane V/C Ratio	0.091	0.011	-	-	0.012	-	-	0.09
HCM Control Delay (s)	15.1	8.3	0	-	8.6	0	-	14.9
HCM Lane LOS	C	A	A	-	A	A	-	B
HCM 95th %tile Q(veh)	0.3	0	-	-	0	-	-	0.3

Intersection	
Int Delay, s/veh	1.9

Movement	EBL	EBT	EBR	WBL	WBT	WBR	NBL	NBT	NBR	SBL	SBT	SBR
Vol, veh/h	10	300	10	10	240	20	30	10	10	10	10	10
Conflicting Peds, #/hr	0	0	0	0	0	0	0	0	0	0	0	0
Sign Control	Free	Free	Free	Free	Free	Free	Stop	Stop	Stop	Stop	Stop	Stop
RT Channelized	-	-	None	-	-	None	-	-	None	-	-	None
Storage Length	-	-	-	-	-	-	-	-	-	-	-	-
Veh in Median Storage, #	-	0	-	-	0	-	-	0	-	-	0	-
Grade, %	-	0	-	-	0	-	-	0	-	-	0	-
Peak Hour Factor	99	99	99	99	99	99	99	99	99	99	99	99
Heavy Vehicles, %	26	26	26	36	36	36	2	2	2	2	2	2
Mvmt Flow	10	303	10	10	242	20	30	10	10	10	10	10

Major/Minor	Major1			Major2			Minor1			Minor2		
Conflicting Flow All	263	0	0	313	0	0	611	611	308	611	606	253
Stage 1	-	-	-	-	-	-	328	328	-	273	273	-
Stage 2	-	-	-	-	-	-	283	283	-	338	333	-
Critical Hdwy	4.36	-	-	4.46	-	-	7.12	6.52	6.22	7.12	6.52	6.22
Critical Hdwy Stg 1	-	-	-	-	-	-	6.12	5.52	-	6.12	5.52	-
Critical Hdwy Stg 2	-	-	-	-	-	-	6.12	5.52	-	6.12	5.52	-
Follow-up Hdwy	2.434	-	-	2.524	-	-	3.518	4.018	3.318	3.518	4.018	3.318
Pot Cap-1 Maneuver	1174	-	-	1078	-	-	406	409	732	406	411	786
Stage 1	-	-	-	-	-	-	685	647	-	733	684	-
Stage 2	-	-	-	-	-	-	724	677	-	676	644	-
Platoon blocked, %		-	-		-	-						
Mov Cap-1 Maneuver	1174	-	-	1078	-	-	387	400	732	386	402	786
Mov Cap-2 Maneuver	-	-	-	-	-	-	387	400	-	386	402	-
Stage 1	-	-	-	-	-	-	678	641	-	726	676	-
Stage 2	-	-	-	-	-	-	696	670	-	650	638	-

Approach	EB	WB	NB	SB
HCM Control Delay, s	0.3	0.3	14.5	13.2
HCM LOS			B	B

Minor Lane/Major Mvmt	NBLn1	EBL	EBT	EBR	WBL	WBT	WBR	SBLn1
Capacity (veh/h)	430	1174	-	-	1078	-	-	472
HCM Lane V/C Ratio	0.117	0.009	-	-	0.009	-	-	0.064
HCM Control Delay (s)	14.5	8.1	0	-	8.4	0	-	13.2
HCM Lane LOS	B	A	A	-	A	A	-	B
HCM 95th %tile Q(veh)	0.4	0	-	-	0	-	-	0.2

Intersection	
Int Delay, s/veh	1.4

Movement	EBL	EBT	EBR	WBL	WBT	WBR	NBL	NBT	NBR	SBL	SBT	SBR
Vol, veh/h	10	330	10	10	270	20	10	10	10	10	10	10
Conflicting Peds, #/hr	0	0	0	0	0	0	0	0	0	0	0	0
Sign Control	Free	Free	Free	Free	Free	Free	Stop	Stop	Stop	Stop	Stop	Stop
RT Channelized	-	-	None	-	-	None	-	-	None	-	-	None
Storage Length	-	-	-	-	-	-	-	-	-	-	-	-
Veh in Median Storage, #	-	0	-	-	0	-	-	0	-	-	0	-
Grade, %	-	0	-	-	0	-	-	0	-	-	0	-
Peak Hour Factor	94	94	94	94	94	94	94	94	94	94	94	94
Heavy Vehicles, %	26	26	26	36	36	36	2	2	2	2	2	2
Mvmt Flow	11	351	11	11	287	21	11	11	11	11	11	11

Major/Minor	Major1			Major2			Minor1			Minor2		
Conflicting Flow All	309	0	0	362	0	0	708	708	356	707	702	298
Stage 1	-	-	-	-	-	-	378	378	-	319	319	-
Stage 2	-	-	-	-	-	-	330	330	-	388	383	-
Critical Hdwy	4.36	-	-	4.46	-	-	7.12	6.52	6.22	7.12	6.52	6.22
Critical Hdwy Stg 1	-	-	-	-	-	-	6.12	5.52	-	6.12	5.52	-
Critical Hdwy Stg 2	-	-	-	-	-	-	6.12	5.52	-	6.12	5.52	-
Follow-up Hdwy	2.434	-	-	2.524	-	-	3.518	4.018	3.318	3.518	4.018	3.318
Pot Cap-1 Maneuver	1127	-	-	1031	-	-	350	360	688	350	362	741
Stage 1	-	-	-	-	-	-	644	615	-	693	653	-
Stage 2	-	-	-	-	-	-	683	646	-	636	612	-
Platoon blocked, %		-	-		-	-						
Mov Cap-1 Maneuver	1127	-	-	1031	-	-	331	351	688	330	353	741
Mov Cap-2 Maneuver	-	-	-	-	-	-	331	351	-	330	353	-
Stage 1	-	-	-	-	-	-	636	608	-	685	645	-
Stage 2	-	-	-	-	-	-	653	638	-	608	605	-

Approach	EB	WB	NB	SB
HCM Control Delay, s	0.2	0.3	14.5	14.4
HCM LOS			B	B

Minor Lane/Major Mvmt	NBLn1	EBL	EBT	EBR	WBL	WBT	WBR	SBLn1
Capacity (veh/h)	410	1127	-	-	1031	-	-	416
HCM Lane V/C Ratio	0.078	0.009	-	-	0.01	-	-	0.077
HCM Control Delay (s)	14.5	8.2	0	-	8.5	0	-	14.4
HCM Lane LOS	B	A	A	-	A	A	-	B
HCM 95th %tile Q(veh)	0.3	0	-	-	0	-	-	0.2

Intersection	
Int Delay, s/veh	3.6

Movement	EBL	EBT	EBR	WBL	WBT	WBR	NBL	NBT	NBR	SBL	SBT	SBR
Vol, veh/h	20	280	30	10	250	20	20	50	10	10	40	20
Conflicting Peds, #/hr	0	0	0	0	0	0	0	0	0	0	0	0
Sign Control	Free	Free	Free	Free	Free	Free	Stop	Stop	Stop	Stop	Stop	Stop
RT Channelized	-	-	None	-	-	None	-	-	None	-	-	None
Storage Length	-	-	-	-	-	-	-	-	-	-	-	-
Veh in Median Storage, #	-	0	-	-	0	-	-	0	-	-	0	-
Grade, %	-	0	-	-	0	-	-	0	-	-	0	-
Peak Hour Factor	94	94	94	94	94	94	94	94	94	94	94	94
Heavy Vehicles, %	26	26	26	36	36	36	2	2	2	2	2	2
Mvmt Flow	21	298	32	11	266	21	21	53	11	11	43	21

Major/Minor	Major1			Major2			Minor1			Minor2		
Conflicting Flow All	287	0	0	330	0	0	686	665	314	686	670	277
Stage 1	-	-	-	-	-	-	356	356	-	298	298	-
Stage 2	-	-	-	-	-	-	330	309	-	388	372	-
Critical Hdwy	4.36	-	-	4.46	-	-	7.12	6.52	6.22	7.12	6.52	6.22
Critical Hdwy Stg 1	-	-	-	-	-	-	6.12	5.52	-	6.12	5.52	-
Critical Hdwy Stg 2	-	-	-	-	-	-	6.12	5.52	-	6.12	5.52	-
Follow-up Hdwy	2.434	-	-	2.524	-	-	3.518	4.018	3.318	3.518	4.018	3.318
Pot Cap-1 Maneuver	1149	-	-	1062	-	-	362	381	726	362	378	762
Stage 1	-	-	-	-	-	-	661	629	-	711	667	-
Stage 2	-	-	-	-	-	-	683	660	-	636	619	-
Platoon blocked, %		-	-		-	-						
Mov Cap-1 Maneuver	1149	-	-	1062	-	-	312	368	726	309	365	762
Mov Cap-2 Maneuver	-	-	-	-	-	-	312	368	-	309	365	-
Stage 1	-	-	-	-	-	-	646	615	-	695	659	-
Stage 2	-	-	-	-	-	-	614	652	-	560	605	-

Approach	EB	WB	NB	SB
HCM Control Delay, s	0.5	0.3	17.4	15.5
HCM LOS			C	C

Minor Lane/Major Mvmt	NBLn1	EBL	EBT	EBR	WBL	WBT	WBR	SBLn1
Capacity (veh/h)	374	1149	-	-	1062	-	-	416
HCM Lane V/C Ratio	0.228	0.019	-	-	0.01	-	-	0.179
HCM Control Delay (s)	17.4	8.2	0	-	8.4	0	-	15.5
HCM Lane LOS	C	A	A	-	A	A	-	C
HCM 95th %tile Q(veh)	0.9	0.1	-	-	0	-	-	0.6

Intersection	
Int Delay, s/veh	1.5

Movement	EBL	EBT	EBR	WBL	WBT	WBR	NBL	NBT	NBR	SBL	SBT	SBR
Vol, veh/h	10	290	10	10	260	20	10	10	10	10	10	10
Conflicting Peds, #/hr	0	0	0	0	0	0	0	0	0	0	0	0
Sign Control	Free	Free	Free	Free	Free	Free	Stop	Stop	Stop	Stop	Stop	Stop
RT Channelized	-	-	None	-	-	None	-	-	None	-	-	None
Storage Length	-	-	-	-	-	-	-	-	-	-	-	-
Veh in Median Storage, #	-	0	-	-	0	-	-	0	-	-	0	-
Grade, %	-	0	-	-	0	-	-	0	-	-	0	-
Peak Hour Factor	94	94	94	94	94	94	94	94	94	94	94	94
Heavy Vehicles, %	26	26	26	36	36	36	2	2	2	2	2	2
Mvmt Flow	11	309	11	11	277	21	11	11	11	11	11	11

Major/Minor	Major1			Major2			Minor1			Minor2		
Conflicting Flow All	298	0	0	319	0	0	654	654	314	655	649	287
Stage 1	-	-	-	-	-	-	335	335	-	309	309	-
Stage 2	-	-	-	-	-	-	319	319	-	346	340	-
Critical Hdwy	4.36	-	-	4.46	-	-	7.12	6.52	6.22	7.12	6.52	6.22
Critical Hdwy Stg 1	-	-	-	-	-	-	6.12	5.52	-	6.12	5.52	-
Critical Hdwy Stg 2	-	-	-	-	-	-	6.12	5.52	-	6.12	5.52	-
Follow-up Hdwy	2.434	-	-	2.524	-	-	3.518	4.018	3.318	3.518	4.018	3.318
Pot Cap-1 Maneuver	1138	-	-	1072	-	-	380	386	726	379	389	752
Stage 1	-	-	-	-	-	-	679	643	-	701	660	-
Stage 2	-	-	-	-	-	-	693	653	-	670	639	-
Platoon blocked, %		-	-		-	-						
Mov Cap-1 Maneuver	1138	-	-	1072	-	-	360	377	726	359	380	752
Mov Cap-2 Maneuver	-	-	-	-	-	-	360	377	-	359	380	-
Stage 1	-	-	-	-	-	-	671	635	-	693	652	-
Stage 2	-	-	-	-	-	-	664	645	-	641	631	-

Approach	EB	WB	NB	SB
HCM Control Delay, s	0.3	0.3	13.8	13.7
HCM LOS			B	B

Minor Lane/Major Mvmt	NBLn1	EBL	EBT	EBR	WBL	WBT	WBR	SBLn1
Capacity (veh/h)	441	1138	-	-	1072	-	-	445
HCM Lane V/C Ratio	0.072	0.009	-	-	0.01	-	-	0.072
HCM Control Delay (s)	13.8	8.2	0	-	8.4	0	-	13.7
HCM Lane LOS	B	A	A	-	A	A	-	B
HCM 95th %tile Q(veh)	0.2	0	-	-	0	-	-	0.2

Intersection	
Int Delay, s/veh	2.8

Movement	EBL	EBT	EBR	WBL	WBT	WBR	NBL	NBT	NBR	SBL	SBT	SBR
Vol, veh/h	0	130	180	20	220	0	0	0	0	30	0	70
Conflicting Peds, #/hr	0	0	0	0	0	0	0	0	0	0	0	0
Sign Control	Free	Free	Free	Free	Free	Free	Stop	Stop	Stop	Stop	Stop	Stop
RT Channelized	-	-	Free	-	-	None	-	-	None	-	-	None
Storage Length	-	-	-	135	-	-	-	-	-	-	-	0
Veh in Median Storage, #	-	0	-	-	0	-	-	0	-	-	0	-
Grade, %	-	0	-	-	0	-	-	0	-	-	0	-
Peak Hour Factor	86	86	86	86	86	86	86	86	86	86	86	86
Heavy Vehicles, %	38	38	38	44	44	44	2	2	2	38	2	44
Mvmt Flow	0	151	209	23	256	0	0	0	0	35	0	81

Major/Minor	Major1			Major2			Minor2		
Conflicting Flow All	256	0	-	151	0	0	453	453	256
Stage 1	-	-	-	-	-	-	302	302	-
Stage 2	-	-	-	-	-	-	151	151	-
Critical Hdwy	4.48	-	-	4.54	-	-	6.78	6.52	6.64
Critical Hdwy Stg 1	-	-	-	-	-	-	5.78	5.52	-
Critical Hdwy Stg 2	-	-	-	-	-	-	5.78	5.52	-
Follow-up Hdwy	2.542	-	-	2.596	-	-	3.842	4.018	3.696
Pot Cap-1 Maneuver	1126	-	0	1210	-	-	503	503	691
Stage 1	-	-	0	-	-	-	675	664	-
Stage 2	-	-	0	-	-	-	796	772	-
Platoon blocked, %		-			-	-			
Mov Cap-1 Maneuver	1126	-	-	1210	-	-	493	0	691
Mov Cap-2 Maneuver	-	-	-	-	-	-	493	0	-
Stage 1	-	-	-	-	-	-	662	0	-
Stage 2	-	-	-	-	-	-	796	0	-

Approach	EB	WB	SB
HCM Control Delay, s	0	0.7	11.5
HCM LOS			B

Minor Lane/Major Mvmt	EBL	EBT	WBL	WBT	WBR	SBLn1	SBLn2
Capacity (veh/h)	1126	-	1210	-	-	493	691
HCM Lane V/C Ratio	-	-	0.019	-	-	0.071	0.118
HCM Control Delay (s)	0	-	8	-	-	12.9	10.9
HCM Lane LOS	A	-	A	-	-	B	B
HCM 95th %tile Q(veh)	0	-	0.1	-	-	0.2	0.4

Intersection	
Int Delay, s/veh	5.4

Movement	EBL	EBT	EBR	WBL	WBT	WBR	NBL	NBT	NBR	SBL	SBT	SBR
Vol, veh/h	0	90	70	0	50	30	180	0	20	0	0	0
Conflicting Peds, #/hr	0	0	0	0	0	0	0	0	0	0	0	0
Sign Control	Free	Free	Free	Free	Free	Free	Stop	Stop	Stop	Stop	Stop	Stop
RT Channelized	-	-	None	-	-	None	-	-	None	-	-	None
Storage Length	-	-	-	-	-	-	0	-	0	-	-	-
Veh in Median Storage, #	-	0	-	-	0	-	-	0	-	-	0	-
Grade, %	-	0	-	-	0	-	-	0	-	-	0	-
Peak Hour Factor	91	91	91	91	91	91	91	91	91	91	91	91
Heavy Vehicles, %	38	38	38	44	44	44	44	2	2	2	2	2
Mvmt Flow	0	99	77	0	55	33	198	0	22	0	0	0

Major/Minor	Major1			Major2			Minor1		
Conflicting Flow All	88	0	0	176	0	0	208	225	137
Stage 1	-	-	-	-	-	-	137	137	-
Stage 2	-	-	-	-	-	-	71	88	-
Critical Hdwy	4.48	-	-	4.54	-	-	6.84	6.52	6.22
Critical Hdwy Stg 1	-	-	-	-	-	-	5.84	5.52	-
Critical Hdwy Stg 2	-	-	-	-	-	-	5.84	5.52	-
Follow-up Hdwy	2.542	-	-	2.596	-	-	3.896	4.018	3.318
Pot Cap-1 Maneuver	1309	-	-	1183	-	-	695	674	911
Stage 1	-	-	-	-	-	-	796	783	-
Stage 2	-	-	-	-	-	-	856	822	-
Platoon blocked, %		-	-		-	-			
Mov Cap-1 Maneuver	1309	-	-	1183	-	-	695	0	911
Mov Cap-2 Maneuver	-	-	-	-	-	-	695	0	-
Stage 1	-	-	-	-	-	-	796	0	-
Stage 2	-	-	-	-	-	-	856	0	-

Approach	EB	WB	NB
HCM Control Delay, s	0	0	11.9
HCM LOS			B

Minor Lane/Major Mvmt	NBLn1	NBLn2	EBL	EBT	EBR	WBL	WBT	WBR
Capacity (veh/h)	695	911	1309	-	-	1183	-	-
HCM Lane V/C Ratio	0.285	0.024	-	-	-	-	-	-
HCM Control Delay (s)	12.2	9	0	-	-	0	-	-
HCM Lane LOS	B	A	A	-	-	A	-	-
HCM 95th %tile Q(veh)	1.2	0.1	0	-	-	0	-	-

Movement	EBL	EBT	WBT	WBR	SBL	SBR
Lane Configurations						
Traffic Volume (veh/h)	0	910	1030	80	0	0
Future Volume (Veh/h)	0	910	1030	80	0	0
Sign Control		Free	Free		Stop	
Grade		0%	0%		0%	
Peak Hour Factor	1.00	1.00	1.00	1.00	1.00	1.00
Hourly flow rate (vph)	0	910	1030	80	0	0
Pedestrians						
Lane Width (ft)						
Walking Speed (ft/s)						
Percent Blockage						
Right turn flare (veh)						
Median type		None	None			
Median storage veh)						
Upstream signal (ft)						
pX, platoon unblocked						
vC, conflicting volume	1030				1485	515
vC1, stage 1 conf vol						
vC2, stage 2 conf vol						
vCu, unblocked vol	1030				1485	515
tC, single (s)	4.7				6.8	6.9
tC, 2 stage (s)						
tF (s)	2.5				3.5	3.3
p0 queue free %	100				100	100
cM capacity (veh/h)	525				115	505

Direction, Lane #	EB 1	EB 2	WB 1	WB 2	WB 3
Volume Total	455	455	515	515	80
Volume Left	0	0	0	0	0
Volume Right	0	0	0	0	80
cSH	1700	1700	1700	1700	1700
Volume to Capacity	0.27	0.27	0.30	0.30	0.05
Queue Length 95th (ft)	0	0	0	0	0
Control Delay (s)	0.0	0.0	0.0	0.0	0.0
Lane LOS					
Approach Delay (s)	0.0		0.0		
Approach LOS					

Intersection Summary			
Average Delay	0.0		
Intersection Capacity Utilization	29.1%	ICU Level of Service	A
Analysis Period (min)	15		

Movement	EBL	EBT	WBT	WBR	SBL	SBR
Lane Configurations						
Traffic Volume (veh/h)	0	950	1070	10	0	0
Future Volume (Veh/h)	0	950	1070	10	0	0
Sign Control		Free	Free		Stop	
Grade		0%	0%		0%	
Peak Hour Factor	1.00	1.00	1.00	1.00	1.00	1.00
Hourly flow rate (vph)	0	950	1070	10	0	0
Pedestrians						
Lane Width (ft)						
Walking Speed (ft/s)						
Percent Blockage						
Right turn flare (veh)						
Median type		None	None			
Median storage veh)						
Upstream signal (ft)						
pX, platoon unblocked						
vC, conflicting volume	1080				1545	535
vC1, stage 1 conf vol						
vC2, stage 2 conf vol						
vCu, unblocked vol	1080				1545	535
tC, single (s)	4.7				6.8	6.9
tC, 2 stage (s)						
tF (s)	2.5				3.5	3.3
p0 queue free %	100				100	100
cM capacity (veh/h)	500				105	490

Direction, Lane #	EB 1	EB 2	WB 1	WB 2	WB 3
Volume Total	475	475	535	535	10
Volume Left	0	0	0	0	0
Volume Right	0	0	0	0	10
cSH	1700	1700	1700	1700	1700
Volume to Capacity	0.28	0.28	0.31	0.31	0.01
Queue Length 95th (ft)	0	0	0	0	0
Control Delay (s)	0.0	0.0	0.0	0.0	0.0
Lane LOS					
Approach Delay (s)	0.0		0.0		
Approach LOS					

Intersection Summary			
Average Delay	0.0		
Intersection Capacity Utilization	30.1%	ICU Level of Service	A
Analysis Period (min)	15		

Movement	EBL	EBT	EBR	WBL	WBT	WBR	NBL	NBT	NBR	SBL	SBT	SBR
Lane Configurations												
Traffic Volume (veh/h)	0	860	90	0	1070	10	0	0	10	0	0	10
Future Volume (Veh/h)	0	860	90	0	1070	10	0	0	10	0	0	10
Sign Control		Free			Free			Stop			Stop	
Grade		0%			0%			0%			0%	
Peak Hour Factor	1.00	1.00	1.00	1.00	1.00	1.00	1.00	1.00	1.00	1.00	1.00	1.00
Hourly flow rate (vph)	0	860	90	0	1070	10	0	0	10	0	0	10
Pedestrians												
Lane Width (ft)												
Walking Speed (ft/s)												
Percent Blockage												
Right turn flare (veh)												
Median type		None			None							
Median storage veh)												
Upstream signal (ft)												
pX, platoon unblocked												
vC, conflicting volume	1080			950			1450	1985	475	1515	2025	540
vC1, stage 1 conf vol												
vC2, stage 2 conf vol												
vCu, unblocked vol	1080			950			1450	1985	475	1515	2025	540
tC, single (s)	4.1			4.1			7.5	6.5	6.9	7.5	6.5	6.9
tC, 2 stage (s)												
tF (s)	2.2			2.2			3.5	4.0	3.3	3.5	4.0	3.3
p0 queue free %	100			100			100	100	98	100	100	98
cM capacity (veh/h)	641			719			90	61	536	81	57	486

Direction, Lane #	EB 1	EB 2	WB 1	WB 2	NB 1	SB 1
Volume Total	573	377	713	367	10	10
Volume Left	0	0	0	0	0	0
Volume Right	0	90	0	10	10	10
cSH	1700	1700	1700	1700	536	486
Volume to Capacity	0.34	0.22	0.42	0.22	0.02	0.02
Queue Length 95th (ft)	0	0	0	0	1	2
Control Delay (s)	0.0	0.0	0.0	0.0	11.8	12.6
Lane LOS					B	B
Approach Delay (s)	0.0		0.0		11.8	12.6
Approach LOS					B	B

Intersection Summary			
Average Delay	0.1		
Intersection Capacity Utilization	37.0%	ICU Level of Service	A
Analysis Period (min)	15		

Intersection	
Int Delay, s/veh	0.1

Movement	EBL	EBT	EBR	WBL	WBT	WBR	NBL	NBT	NBR	SBL	SBT	SBR
Traffic Vol, veh/h	0	860	90	0	1070	10	0	0	10	0	0	10
Future Vol, veh/h	0	860	90	0	1070	10	0	0	10	0	0	10
Conflicting Peds, #/hr	0	0	0	0	0	0	0	0	0	0	0	0
Sign Control	Free	Free	Free	Free	Free	Free	Stop	Stop	Stop	Stop	Stop	Stop
RT Channelized	-	-	None	-	-	None	-	-	None	-	-	None
Storage Length	-	-	-	-	-	-	-	-	0	-	-	0
Veh in Median Storage, #	-	0	-	-	0	-	-	0	-	-	0	-
Grade, %	-	0	-	-	0	-	-	0	-	-	0	-
Peak Hour Factor	100	100	100	100	100	100	100	100	100	100	100	100
Heavy Vehicles, %	2	2	2	2	2	2	2	2	2	2	2	2
Mvmt Flow	0	860	90	0	1070	10	0	0	10	0	0	10

Major/Minor	Major1			Major2			Minor1			Minor2		
Conflicting Flow All	1080	0	0	950	0	0	1440	1985	475	1505	2025	540
Stage 1	-	-	-	-	-	-	905	905	-	1075	1075	-
Stage 2	-	-	-	-	-	-	535	1080	-	430	950	-
Critical Hdwy	4.14	-	-	4.14	-	-	7.54	6.54	6.94	7.54	6.54	6.94
Critical Hdwy Stg 1	-	-	-	-	-	-	6.54	5.54	-	6.54	5.54	-
Critical Hdwy Stg 2	-	-	-	-	-	-	6.54	5.54	-	6.54	5.54	-
Follow-up Hdwy	2.22	-	-	2.22	-	-	3.52	4.02	3.32	3.52	4.02	3.32
Pot Cap-1 Maneuver	641	-	-	719	-	-	93	61	536	84	57	486
Stage 1	-	-	-	-	-	-	298	353	-	234	294	-
Stage 2	-	-	-	-	-	-	497	293	-	574	337	-
Platoon blocked, %		-	-		-	-						
Mov Cap-1 Maneuver	641	-	-	719	-	-	91	61	536	82	57	486
Mov Cap-2 Maneuver	-	-	-	-	-	-	91	61	-	82	57	-
Stage 1	-	-	-	-	-	-	298	353	-	234	294	-
Stage 2	-	-	-	-	-	-	487	293	-	563	337	-

Approach	EB	WB	NB	SB
HCM Control Delay, s	0	0	11.8	12.6
HCM LOS			B	B

Minor Lane/Major Mvmt	NBLn1	EBL	EBT	EBR	WBL	WBT	WBR	SBLn1
Capacity (veh/h)	536	641	-	-	719	-	-	486
HCM Lane V/C Ratio	0.019	-	-	-	-	-	-	0.021
HCM Control Delay (s)	11.8	0	-	-	0	-	-	12.6
HCM Lane LOS	B	A	-	-	A	-	-	B
HCM 95th %tile Q(veh)	0.1	0	-	-	0	-	-	0.1

Movement	EBL	EBT	EBR	WBL	WBT	WBR	NBL	NBT	NBR	SBL	SBT	SBR
Lane Configurations												
Traffic Volume (veh/h)	0	870	10	0	1080	10	0	0	10	0	0	10
Future Volume (Veh/h)	0	870	10	0	1080	10	0	0	10	0	0	10
Sign Control		Free			Free			Stop			Stop	
Grade		0%			0%			0%			0%	
Peak Hour Factor	1.00	1.00	1.00	1.00	1.00	1.00	1.00	1.00	1.00	1.00	1.00	1.00
Hourly flow rate (vph)	0	870	10	0	1080	10	0	0	10	0	0	10
Pedestrians												
Lane Width (ft)												
Walking Speed (ft/s)												
Percent Blockage												
Right turn flare (veh)												
Median type		None			None							
Median storage veh)												
Upstream signal (ft)												
pX, platoon unblocked												
vC, conflicting volume	1090			880			1425	1965	440	1530	1965	545
vC1, stage 1 conf vol												
vC2, stage 2 conf vol												
vCu, unblocked vol	1090			880			1425	1965	440	1530	1965	545
tC, single (s)	4.1			4.1			7.5	6.5	6.9	7.5	6.5	6.9
tC, 2 stage (s)												
tF (s)	2.2			2.2			3.5	4.0	3.3	3.5	4.0	3.3
p0 queue free %	100			100			100	100	98	100	100	98
cM capacity (veh/h)	636			764			94	62	565	79	62	482

Direction, Lane #	EB 1	EB 2	WB 1	WB 2	NB 1	SB 1
Volume Total	580	300	720	370	10	10
Volume Left	0	0	0	0	0	0
Volume Right	0	10	0	10	10	10
cSH	1700	1700	1700	1700	565	482
Volume to Capacity	0.34	0.18	0.42	0.22	0.02	0.02
Queue Length 95th (ft)	0	0	0	0	1	2
Control Delay (s)	0.0	0.0	0.0	0.0	11.5	12.6
Lane LOS					B	B
Approach Delay (s)	0.0		0.0		11.5	12.6
Approach LOS					B	B

Intersection Summary			
Average Delay	0.1		
Intersection Capacity Utilization	37.3%	ICU Level of Service	A
Analysis Period (min)	15		

Intersection	
Int Delay, s/veh	0.1

Movement	EBL	EBT	EBR	WBL	WBT	WBR	NBL	NBT	NBR	SBL	SBT	SBR
Traffic Vol, veh/h	0	870	10	0	1080	10	0	0	10	0	0	10
Future Vol, veh/h	0	870	10	0	1080	10	0	0	10	0	0	10
Conflicting Peds, #/hr	0	0	0	0	0	0	0	0	0	0	0	0
Sign Control	Free	Free	Free	Free	Free	Free	Stop	Stop	Stop	Stop	Stop	Stop
RT Channelized	-	-	None	-	-	None	-	-	None	-	-	None
Storage Length	-	-	-	-	-	-	-	-	0	-	-	0
Veh in Median Storage, #	-	0	-	-	0	-	-	0	-	-	0	-
Grade, %	-	0	-	-	0	-	-	0	-	-	0	-
Peak Hour Factor	100	100	100	100	100	100	100	100	100	100	100	100
Heavy Vehicles, %	2	2	2	2	2	2	2	2	2	2	2	2
Mvmt Flow	0	870	10	0	1080	10	0	0	10	0	0	10

Major/Minor	Major1			Major2			Minor1			Minor2		
Conflicting Flow All	1090	0	0	880	0	0	1415	1965	440	1520	1965	545
Stage 1	-	-	-	-	-	-	875	875	-	1085	1085	-
Stage 2	-	-	-	-	-	-	540	1090	-	435	880	-
Critical Hdwy	4.14	-	-	4.14	-	-	7.54	6.54	6.94	7.54	6.54	6.94
Critical Hdwy Stg 1	-	-	-	-	-	-	6.54	5.54	-	6.54	5.54	-
Critical Hdwy Stg 2	-	-	-	-	-	-	6.54	5.54	-	6.54	5.54	-
Follow-up Hdwy	2.22	-	-	2.22	-	-	3.52	4.02	3.32	3.52	4.02	3.32
Pot Cap-1 Maneuver	636	-	-	764	-	-	97	62	565	81	62	482
Stage 1	-	-	-	-	-	-	310	365	-	231	291	-
Stage 2	-	-	-	-	-	-	494	289	-	570	363	-
Platoon blocked, %		-	-		-	-						
Mov Cap-1 Maneuver	636	-	-	764	-	-	95	62	565	80	62	482
Mov Cap-2 Maneuver	-	-	-	-	-	-	95	62	-	80	62	-
Stage 1	-	-	-	-	-	-	310	365	-	231	291	-
Stage 2	-	-	-	-	-	-	484	289	-	560	363	-

Approach	EB	WB	NB	SB
HCM Control Delay, s	0	0	11.5	12.6
HCM LOS			B	B

Minor Lane/Major Mvmt	NBLn1	EBL	EBT	EBR	WBL	WBT	WBR	SBLn1
Capacity (veh/h)	565	636	-	-	764	-	-	482
HCM Lane V/C Ratio	0.018	-	-	-	-	-	-	0.021
HCM Control Delay (s)	11.5	0	-	-	0	-	-	12.6
HCM Lane LOS	B	A	-	-	A	-	-	B
HCM 95th %tile Q(veh)	0.1	0	-	-	0	-	-	0.1

Movement	EBL	EBT	EBR	WBL	WBT	WBR	NBL	NBT	NBR	SBL	SBT	SBR
Lane Configurations												
Traffic Volume (veh/h)	0	780	90	0	1060	10	0	0	30	0	0	20
Future Volume (Veh/h)	0	780	90	0	1060	10	0	0	30	0	0	20
Sign Control		Free			Free			Stop			Stop	
Grade		0%			0%			0%			0%	
Peak Hour Factor	1.00	1.00	1.00	1.00	1.00	1.00	1.00	1.00	1.00	1.00	1.00	1.00
Hourly flow rate (vph)	0	780	90	0	1060	10	0	0	30	0	0	20
Pedestrians												
Lane Width (ft)												
Walking Speed (ft/s)												
Percent Blockage												
Right turn flare (veh)												
Median type		None			None							
Median storage veh)												
Upstream signal (ft)												
pX, platoon unblocked												
vC, conflicting volume	1070			870			1375	1895	435	1485	1935	535
vC1, stage 1 conf vol												
vC2, stage 2 conf vol												
vCu, unblocked vol	1070			870			1375	1895	435	1485	1935	535
tC, single (s)	4.8			4.1			7.5	6.5	6.9	7.5	6.5	6.9
tC, 2 stage (s)												
tF (s)	2.5			2.2			3.5	4.0	3.3	3.5	4.0	3.3
p0 queue free %	100			100			100	100	95	100	100	96
cM capacity (veh/h)	492			770			100	69	569	82	65	490

Direction, Lane #	EB 1	EB 2	WB 1	WB 2	NB 1	SB 1
Volume Total	520	350	707	363	30	20
Volume Left	0	0	0	0	0	0
Volume Right	0	90	0	10	30	20
cSH	1700	1700	1700	1700	569	490
Volume to Capacity	0.31	0.21	0.42	0.21	0.05	0.04
Queue Length 95th (ft)	0	0	0	0	4	3
Control Delay (s)	0.0	0.0	0.0	0.0	11.7	12.7
Lane LOS					B	B
Approach Delay (s)	0.0		0.0		11.7	12.7
Approach LOS					B	B

Intersection Summary			
Average Delay	0.3		
Intersection Capacity Utilization	36.8%	ICU Level of Service	A
Analysis Period (min)	15		

Intersection	
Int Delay, s/veh	0.3

Movement	EBL	EBT	EBR	WBL	WBT	WBR	NBL	NBT	NBR	SBL	SBT	SBR
Traffic Vol, veh/h	0	780	90	0	1060	10	0	0	30	0	0	20
Future Vol, veh/h	0	780	90	0	1060	10	0	0	30	0	0	20
Conflicting Peds, #/hr	0	0	0	0	0	0	0	0	0	0	0	0
Sign Control	Free	Free	Free	Free	Free	Free	Stop	Stop	Stop	Stop	Stop	Stop
RT Channelized	-	-	None	-	-	None	-	-	None	-	-	None
Storage Length	-	-	-	-	-	-	-	-	0	-	-	0
Veh in Median Storage, #	-	0	-	-	0	-	-	0	-	-	0	-
Grade, %	-	0	-	-	0	-	-	0	-	-	0	-
Peak Hour Factor	100	100	100	100	100	100	100	100	100	100	100	100
Heavy Vehicles, %	33	33	2	2	41	41	2	2	2	2	2	2
Mvmt Flow	0	780	90	0	1060	10	0	0	30	0	0	20

Major/Minor	Major1			Major2			Minor1			Minor2		
Conflicting Flow All	1070	0	0	870	0	0	1355	1895	435	1455	1935	535
Stage 1	-	-	-	-	-	-	825	825	-	1065	1065	-
Stage 2	-	-	-	-	-	-	530	1070	-	390	870	-
Critical Hdwy	4.76	-	-	4.14	-	-	7.54	6.54	6.94	7.54	6.54	6.94
Critical Hdwy Stg 1	-	-	-	-	-	-	6.54	5.54	-	6.54	5.54	-
Critical Hdwy Stg 2	-	-	-	-	-	-	6.54	5.54	-	6.54	5.54	-
Follow-up Hdwy	2.53	-	-	2.22	-	-	3.52	4.02	3.32	3.52	4.02	3.32
Pot Cap-1 Maneuver	492	-	-	770	-	-	108	69	569	91	65	490
Stage 1	-	-	-	-	-	-	333	385	-	238	297	-
Stage 2	-	-	-	-	-	-	500	296	-	606	367	-
Platoon blocked, %		-	-		-	-						
Mov Cap-1 Maneuver	492	-	-	770	-	-	104	69	569	86	65	490
Mov Cap-2 Maneuver	-	-	-	-	-	-	104	69	-	86	65	-
Stage 1	-	-	-	-	-	-	333	385	-	238	297	-
Stage 2	-	-	-	-	-	-	480	296	-	574	367	-

Approach	EB	WB	NB	SB
HCM Control Delay, s	0	0	11.7	12.7
HCM LOS			B	B

Minor Lane/Major Mvmt	NBLn1	EBL	EBT	EBR	WBL	WBT	WBR	SBLn1
Capacity (veh/h)	569	492	-	-	770	-	-	490
HCM Lane V/C Ratio	0.053	-	-	-	-	-	-	0.041
HCM Control Delay (s)	11.7	0	-	-	0	-	-	12.7
HCM Lane LOS	B	A	-	-	A	-	-	B
HCM 95th %tile Q(veh)	0.2	0	-	-	0	-	-	0.1

Movement	EBL	EBT	EBR	WBL	WBT	WBR	NBL	NBT	NBR	SBL	SBT	SBR
Lane Configurations												
Traffic Volume (veh/h)	0	650	80	0	1000	10	0	0	10	0	0	20
Future Volume (Veh/h)	0	650	80	0	1000	10	0	0	10	0	0	20
Sign Control		Free			Free			Stop			Stop	
Grade		0%			0%			0%			0%	
Peak Hour Factor	1.00	1.00	1.00	1.00	1.00	1.00	1.00	1.00	1.00	1.00	1.00	1.00
Hourly flow rate (vph)	0	650	80	0	1000	10	0	0	10	0	0	20
Pedestrians												
Lane Width (ft)												
Walking Speed (ft/s)												
Percent Blockage												
Right turn flare (veh)												
Median type		None			None							
Median storage veh)												
Upstream signal (ft)												
pX, platoon unblocked												
vC, conflicting volume	1010			730			1210	1700	365	1340	1735	505
vC1, stage 1 conf vol												
vC2, stage 2 conf vol												
vCu, unblocked vol	1010			730			1210	1700	365	1340	1735	505
tC, single (s)	4.7			4.9			7.5	6.5	6.9	7.5	6.5	6.9
tC, 2 stage (s)												
tF (s)	2.5			2.6			3.5	4.0	3.3	3.5	4.0	3.3
p0 queue free %	100			100			100	100	98	100	100	96
cM capacity (veh/h)	532			664			133	91	632	109	87	512

Direction, Lane #	EB 1	EB 2	WB 1	WB 2	NB 1	SB 1
Volume Total	433	297	667	343	10	20
Volume Left	0	0	0	0	0	0
Volume Right	0	80	0	10	10	20
cSH	1700	1700	1700	1700	632	512
Volume to Capacity	0.25	0.17	0.39	0.20	0.02	0.04
Queue Length 95th (ft)	0	0	0	0	1	3
Control Delay (s)	0.0	0.0	0.0	0.0	10.8	12.3
Lane LOS					B	B
Approach Delay (s)	0.0		0.0		10.8	12.3
Approach LOS					B	B

Intersection Summary			
Average Delay	0.2		
Intersection Capacity Utilization	35.3%	ICU Level of Service	A
Analysis Period (min)	15		

Intersection	
Int Delay, s/veh	0.2

Movement	EBL	EBT	EBR	WBL	WBT	WBR	NBL	NBT	NBR	SBL	SBT	SBR
Traffic Vol, veh/h	0	650	80	0	1000	10	0	0	10	0	0	20
Future Vol, veh/h	0	650	80	0	1000	10	0	0	10	0	0	20
Conflicting Peds, #/hr	0	0	0	0	0	0	0	0	0	0	0	0
Sign Control	Free	Free	Free	Free	Free	Free	Stop	Stop	Stop	Stop	Stop	Stop
RT Channelized	-	-	None	-	-	None	-	-	None	-	-	None
Storage Length	-	-	-	-	-	-	-	-	0	-	-	0
Veh in Median Storage, #	-	0	-	-	0	-	-	0	-	-	0	-
Grade, %	-	0	-	-	0	-	-	0	-	-	0	-
Peak Hour Factor	100	100	100	100	100	100	100	100	100	100	100	100
Heavy Vehicles, %	31	31	31	39	39	39	2	2	2	2	2	2
Mvmt Flow	0	650	80	0	1000	10	0	0	10	0	0	20

Major/Minor	Major1			Major2			Minor1			Minor2		
Conflicting Flow All	1010	0	0	730	0	0	1190	1700	365	1330	1735	505
Stage 1	-	-	-	-	-	-	690	690	-	1005	1005	-
Stage 2	-	-	-	-	-	-	500	1010	-	325	730	-
Critical Hdwy	4.72	-	-	4.88	-	-	7.54	6.54	6.94	7.54	6.54	6.94
Critical Hdwy Stg 1	-	-	-	-	-	-	6.54	5.54	-	6.54	5.54	-
Critical Hdwy Stg 2	-	-	-	-	-	-	6.54	5.54	-	6.54	5.54	-
Follow-up Hdwy	2.51	-	-	2.59	-	-	3.52	4.02	3.32	3.52	4.02	3.32
Pot Cap-1 Maneuver	532	-	-	664	-	-	143	91	632	113	87	512
Stage 1	-	-	-	-	-	-	401	444	-	259	317	-
Stage 2	-	-	-	-	-	-	521	316	-	661	426	-
Platoon blocked, %		-	-		-	-						
Mov Cap-1 Maneuver	532	-	-	664	-	-	137	91	632	111	87	512
Mov Cap-2 Maneuver	-	-	-	-	-	-	137	91	-	111	87	-
Stage 1	-	-	-	-	-	-	401	444	-	259	317	-
Stage 2	-	-	-	-	-	-	501	316	-	651	426	-

Approach	EB	WB	NB	SB
HCM Control Delay, s	0	0	10.8	12.3
HCM LOS			B	B

Minor Lane/Major Mvmt	NBLn1	EBL	EBT	EBR	WBL	WBT	WBR	SBLn1
Capacity (veh/h)	632	532	-	-	664	-	-	512
HCM Lane V/C Ratio	0.016	-	-	-	-	-	-	0.039
HCM Control Delay (s)	10.8	0	-	-	0	-	-	12.3
HCM Lane LOS	B	A	-	-	A	-	-	B
HCM 95th %tile Q(veh)	0	0	-	-	0	-	-	0.1

Movement	EBL	EBT	EBR	WBL	WBT	WBR	NBL	NBT	NBR	SBL	SBT	SBR
Lane Configurations												
Traffic Volume (veh/h)	0	680	10	0	970	10	0	0	10	0	0	10
Future Volume (Veh/h)	0	680	10	0	970	10	0	0	10	0	0	10
Sign Control		Free			Free			Stop			Stop	
Grade		0%			0%			0%			0%	
Peak Hour Factor	1.00	1.00	1.00	1.00	1.00	1.00	1.00	1.00	1.00	1.00	1.00	1.00
Hourly flow rate (vph)	0	680	10	0	970	10	0	0	10	0	0	10
Pedestrians												
Lane Width (ft)												
Walking Speed (ft/s)												
Percent Blockage												
Right turn flare (veh)												
Median type		None			None							
Median storage veh)												
Upstream signal (ft)												
pX, platoon unblocked												
vC, conflicting volume	980			690			1180	1665	345	1325	1665	490
vC1, stage 1 conf vol												
vC2, stage 2 conf vol												
vCu, unblocked vol	980			690			1180	1665	345	1325	1665	490
tC, single (s)	4.1			4.1			7.5	6.5	6.9	7.5	6.5	6.9
tC, 2 stage (s)												
tF (s)	2.2			2.2			3.5	4.0	3.3	3.5	4.0	3.3
p0 queue free %	100			100			100	100	98	100	100	98
cM capacity (veh/h)	700			900			143	96	651	112	96	524

Direction, Lane #	EB 1	EB 2	WB 1	WB 2	NB 1	SB 1
Volume Total	453	237	647	333	10	10
Volume Left	0	0	0	0	0	0
Volume Right	0	10	0	10	10	10
cSH	1700	1700	1700	1700	651	524
Volume to Capacity	0.27	0.14	0.38	0.20	0.02	0.02
Queue Length 95th (ft)	0	0	0	0	1	1
Control Delay (s)	0.0	0.0	0.0	0.0	10.6	12.0
Lane LOS					B	B
Approach Delay (s)	0.0		0.0		10.6	12.0
Approach LOS					B	B

Intersection Summary			
Average Delay	0.1		
Intersection Capacity Utilization	34.5%	ICU Level of Service	A
Analysis Period (min)	15		

Intersection	
Int Delay, s/veh	0.1

Movement	EBL	EBT	EBR	WBL	WBT	WBR	NBL	NBT	NBR	SBL	SBT	SBR
Traffic Vol, veh/h	0	680	10	0	970	10	0	0	10	0	0	10
Future Vol, veh/h	0	680	10	0	970	10	0	0	10	0	0	10
Conflicting Peds, #/hr	0	0	0	0	0	0	0	0	0	0	0	0
Sign Control	Free	Free	Free	Free	Free	Free	Stop	Stop	Stop	Stop	Stop	Stop
RT Channelized	-	-	None	-	-	None	-	-	None	-	-	None
Storage Length	-	-	-	-	-	-	-	-	0	-	-	0
Veh in Median Storage, #	-	0	-	-	0	-	-	0	-	-	0	-
Grade, %	-	0	-	-	0	-	-	0	-	-	0	-
Peak Hour Factor	100	100	100	100	100	100	100	100	100	100	100	100
Heavy Vehicles, %	2	2	2	2	2	2	2	2	2	2	2	2
Mvmt Flow	0	680	10	0	970	10	0	0	10	0	0	10

Major/Minor	Major1			Major2			Minor1			Minor2		
Conflicting Flow All	980	0	0	690	0	0	1170	1665	345	1315	1665	490
Stage 1	-	-	-	-	-	-	685	685	-	975	975	-
Stage 2	-	-	-	-	-	-	485	980	-	340	690	-
Critical Hdwy	4.14	-	-	4.14	-	-	7.54	6.54	6.94	7.54	6.54	6.94
Critical Hdwy Stg 1	-	-	-	-	-	-	6.54	5.54	-	6.54	5.54	-
Critical Hdwy Stg 2	-	-	-	-	-	-	6.54	5.54	-	6.54	5.54	-
Follow-up Hdwy	2.22	-	-	2.22	-	-	3.52	4.02	3.32	3.52	4.02	3.32
Pot Cap-1 Maneuver	700	-	-	900	-	-	148	96	651	116	96	524
Stage 1	-	-	-	-	-	-	404	447	-	270	328	-
Stage 2	-	-	-	-	-	-	532	326	-	648	444	-
Platoon blocked, %		-	-		-	-						
Mov Cap-1 Maneuver	700	-	-	900	-	-	145	96	651	114	96	524
Mov Cap-2 Maneuver	-	-	-	-	-	-	145	96	-	114	96	-
Stage 1	-	-	-	-	-	-	404	447	-	270	328	-
Stage 2	-	-	-	-	-	-	522	326	-	638	444	-

Approach	EB	WB	NB	SB
HCM Control Delay, s	0	0	10.6	12
HCM LOS			B	B

Minor Lane/Major Mvmt	NBLn1	EBL	EBT	EBR	WBL	WBT	WBR	SBLn1
Capacity (veh/h)	651	700	-	-	900	-	-	524
HCM Lane V/C Ratio	0.015	-	-	-	-	-	-	0.019
HCM Control Delay (s)	10.6	0	-	-	0	-	-	12
HCM Lane LOS	B	A	-	-	A	-	-	B
HCM 95th %tile Q(veh)	0	0	-	-	0	-	-	0.1

Movement	EBL	EBT	EBR	WBL	WBT	WBR	NBL	NBT	NBR	SBL	SBT	SBR
Lane Configurations												
Traffic Volume (veh/h)	0	670	10	0	950	10	0	0	10	0	0	20
Future Volume (Veh/h)	0	670	10	0	950	10	0	0	10	0	0	20
Sign Control		Free			Free			Stop			Stop	
Grade		0%			0%			0%			0%	
Peak Hour Factor	1.00	1.00	1.00	1.00	1.00	1.00	1.00	1.00	1.00	1.00	1.00	1.00
Hourly flow rate (vph)	0	670	10	0	950	10	0	0	10	0	0	20
Pedestrians												
Lane Width (ft)												
Walking Speed (ft/s)												
Percent Blockage												
Right turn flare (veh)												
Median type		None			None							
Median storage veh)												
Upstream signal (ft)												
pX, platoon unblocked												
vC, conflicting volume	960			680			1170	1635	340	1300	1635	480
vC1, stage 1 conf vol												
vC2, stage 2 conf vol												
vCu, unblocked vol	960			680			1170	1635	340	1300	1635	480
tC, single (s)	4.1			4.1			7.5	6.5	6.9	7.5	6.5	6.9
tC, 2 stage (s)												
tF (s)	2.2			2.2			3.5	4.0	3.3	3.5	4.0	3.3
p0 queue free %	100			100			100	100	98	100	100	96
cM capacity (veh/h)	712			908			143	100	656	117	100	532

Direction, Lane #	EB 1	EB 2	WB 1	WB 2	NB 1	SB 1
Volume Total	447	233	633	327	10	20
Volume Left	0	0	0	0	0	0
Volume Right	0	10	0	10	10	20
cSH	1700	1700	1700	1700	656	532
Volume to Capacity	0.26	0.14	0.37	0.19	0.02	0.04
Queue Length 95th (ft)	0	0	0	0	1	3
Control Delay (s)	0.0	0.0	0.0	0.0	10.6	12.0
Lane LOS					B	B
Approach Delay (s)	0.0		0.0		10.6	12.0
Approach LOS					B	B

Intersection Summary			
Average Delay	0.2		
Intersection Capacity Utilization	34.0%	ICU Level of Service	A
Analysis Period (min)	15		

Intersection	
Int Delay, s/veh	0.2

Movement	EBL	EBT	EBR	WBL	WBT	WBR	NBL	NBT	NBR	SBL	SBT	SBR
Traffic Vol, veh/h	0	670	10	0	950	10	0	0	10	0	0	20
Future Vol, veh/h	0	670	10	0	950	10	0	0	10	0	0	20
Conflicting Peds, #/hr	0	0	0	0	0	0	0	0	0	0	0	0
Sign Control	Free	Free	Free	Free	Free	Free	Stop	Stop	Stop	Stop	Stop	Stop
RT Channelized	-	-	None	-	-	None	-	-	None	-	-	None
Storage Length	-	-	-	-	-	-	-	-	0	-	-	0
Veh in Median Storage, #	-	0	-	-	0	-	-	0	-	-	0	-
Grade, %	-	0	-	-	0	-	-	0	-	-	0	-
Peak Hour Factor	100	100	100	100	100	100	100	100	100	100	100	100
Heavy Vehicles, %	2	2	2	2	2	2	2	2	2	2	2	2
Mvmt Flow	0	670	10	0	950	10	0	0	10	0	0	20

Major/Minor	Major1			Major2			Minor1			Minor2		
Conflicting Flow All	960	0	0	680	0	0	1150	1635	340	1290	1635	480
Stage 1	-	-	-	-	-	-	675	675	-	955	955	-
Stage 2	-	-	-	-	-	-	475	960	-	335	680	-
Critical Hdwy	4.14	-	-	4.14	-	-	7.54	6.54	6.94	7.54	6.54	6.94
Critical Hdwy Stg 1	-	-	-	-	-	-	6.54	5.54	-	6.54	5.54	-
Critical Hdwy Stg 2	-	-	-	-	-	-	6.54	5.54	-	6.54	5.54	-
Follow-up Hdwy	2.22	-	-	2.22	-	-	3.52	4.02	3.32	3.52	4.02	3.32
Pot Cap-1 Maneuver	712	-	-	908	-	-	153	100	656	121	100	532
Stage 1	-	-	-	-	-	-	410	451	-	278	335	-
Stage 2	-	-	-	-	-	-	539	333	-	653	449	-
Platoon blocked, %		-	-		-	-						
Mov Cap-1 Maneuver	712	-	-	908	-	-	147	100	656	119	100	532
Mov Cap-2 Maneuver	-	-	-	-	-	-	147	100	-	119	100	-
Stage 1	-	-	-	-	-	-	410	451	-	278	335	-
Stage 2	-	-	-	-	-	-	519	333	-	643	449	-

Approach	EB	WB	NB	SB
HCM Control Delay, s	0	0	10.6	12
HCM LOS			B	B

Minor Lane/Major Mvmt	NBLn1	EBL	EBT	EBR	WBL	WBT	WBR	SBLn1
Capacity (veh/h)	656	712	-	-	908	-	-	532
HCM Lane V/C Ratio	0.015	-	-	-	-	-	-	0.038
HCM Control Delay (s)	10.6	0	-	-	0	-	-	12
HCM Lane LOS	B	A	-	-	A	-	-	B
HCM 95th %tile Q(veh)	0	0	-	-	0	-	-	0.1

Movement	EBL	EBT	EBR	WBL	WBT	WBR	NBL	NBT	NBR	SBL	SBT	SBR
Lane Configurations												
Traffic Volume (veh/h)	0	680	10	0	960	10	0	0	10	0	0	10
Future Volume (Veh/h)	0	680	10	0	960	10	0	0	10	0	0	10
Sign Control		Free			Free			Stop			Stop	
Grade		0%			0%			0%			0%	
Peak Hour Factor	1.00	1.00	1.00	1.00	1.00	1.00	1.00	1.00	1.00	1.00	1.00	1.00
Hourly flow rate (vph)	0	680	10	0	960	10	0	0	10	0	0	10
Pedestrians												
Lane Width (ft)												
Walking Speed (ft/s)												
Percent Blockage												
Right turn flare (veh)												
Median type		None			None							
Median storage veh)												
Upstream signal (ft)												
pX, platoon unblocked												
vC, conflicting volume	970			690			1175	1655	345	1315	1655	485
vC1, stage 1 conf vol												
vC2, stage 2 conf vol												
vCu, unblocked vol	970			690			1175	1655	345	1315	1655	485
tC, single (s)	4.1			4.1			7.5	6.5	6.9	7.5	6.5	6.9
tC, 2 stage (s)												
tF (s)	2.2			2.2			3.5	4.0	3.3	3.5	4.0	3.3
p0 queue free %	100			100			100	100	98	100	100	98
cM capacity (veh/h)	706			900			144	97	651	114	97	528

Direction, Lane #	EB 1	EB 2	WB 1	WB 2	NB 1	SB 1
Volume Total	453	237	640	330	10	10
Volume Left	0	0	0	0	0	0
Volume Right	0	10	0	10	10	10
cSH	1700	1700	1700	1700	651	528
Volume to Capacity	0.27	0.14	0.38	0.19	0.02	0.02
Queue Length 95th (ft)	0	0	0	0	1	1
Control Delay (s)	0.0	0.0	0.0	0.0	10.6	11.9
Lane LOS					B	B
Approach Delay (s)	0.0		0.0		10.6	11.9
Approach LOS					B	B

Intersection Summary			
Average Delay	0.1		
Intersection Capacity Utilization	34.3%	ICU Level of Service	A
Analysis Period (min)	15		

Intersection	
Int Delay, s/veh	0.1

Movement	EBL	EBT	EBR	WBL	WBT	WBR	NBL	NBT	NBR	SBL	SBT	SBR
Traffic Vol, veh/h	0	680	10	0	960	10	0	0	10	0	0	10
Future Vol, veh/h	0	680	10	0	960	10	0	0	10	0	0	10
Conflicting Peds, #/hr	0	0	0	0	0	0	0	0	0	0	0	0
Sign Control	Free	Free	Free	Free	Free	Free	Stop	Stop	Stop	Stop	Stop	Stop
RT Channelized	-	-	None	-	-	None	-	-	None	-	-	None
Storage Length	-	-	-	-	-	-	-	-	0	-	-	0
Veh in Median Storage, #	-	0	-	-	0	-	-	0	-	-	0	-
Grade, %	-	0	-	-	0	-	-	0	-	-	0	-
Peak Hour Factor	100	100	100	100	100	100	100	100	100	100	100	100
Heavy Vehicles, %	2	2	2	2	2	2	2	2	2	2	2	2
Mvmt Flow	0	680	10	0	960	10	0	0	10	0	0	10

Major/Minor	Major1			Major2			Minor1			Minor2		
Conflicting Flow All	970	0	0	690	0	0	1165	1655	345	1305	1655	485
Stage 1	-	-	-	-	-	-	685	685	-	965	965	-
Stage 2	-	-	-	-	-	-	480	970	-	340	690	-
Critical Hdwy	4.14	-	-	4.14	-	-	7.54	6.54	6.94	7.54	6.54	6.94
Critical Hdwy Stg 1	-	-	-	-	-	-	6.54	5.54	-	6.54	5.54	-
Critical Hdwy Stg 2	-	-	-	-	-	-	6.54	5.54	-	6.54	5.54	-
Follow-up Hdwy	2.22	-	-	2.22	-	-	3.52	4.02	3.32	3.52	4.02	3.32
Pot Cap-1 Maneuver	706	-	-	900	-	-	149	97	651	118	97	528
Stage 1	-	-	-	-	-	-	404	447	-	274	331	-
Stage 2	-	-	-	-	-	-	536	330	-	648	444	-
Platoon blocked, %		-	-		-	-						
Mov Cap-1 Maneuver	706	-	-	900	-	-	146	97	651	116	97	528
Mov Cap-2 Maneuver	-	-	-	-	-	-	146	97	-	116	97	-
Stage 1	-	-	-	-	-	-	404	447	-	274	331	-
Stage 2	-	-	-	-	-	-	526	330	-	638	444	-

Approach	EB	WB	NB	SB
HCM Control Delay, s	0	0	10.6	12
HCM LOS			B	B

Minor Lane/Major Mvmt	NBLn1	EBL	EBT	EBR	WBL	WBT	WBR	SBLn1
Capacity (veh/h)	651	706	-	-	900	-	-	528
HCM Lane V/C Ratio	0.015	-	-	-	-	-	-	0.019
HCM Control Delay (s)	10.6	0	-	-	0	-	-	12
HCM Lane LOS	B	A	-	-	A	-	-	B
HCM 95th %tile Q(veh)	0	0	-	-	0	-	-	0.1

Movement	EBL	EBT	EBR	WBL	WBT	WBR	NBL	NBT	NBR	SBL	SBT	SBR
Lane Configurations												
Traffic Volume (veh/h)	0	670	10	0	950	10	0	0	10	0	0	10
Future Volume (Veh/h)	0	670	10	0	950	10	0	0	10	0	0	10
Sign Control		Free			Free			Stop			Stop	
Grade		0%			0%			0%			0%	
Peak Hour Factor	1.00	1.00	1.00	1.00	1.00	1.00	1.00	1.00	1.00	1.00	1.00	1.00
Hourly flow rate (vph)	0	670	10	0	950	10	0	0	10	0	0	10
Pedestrians												
Lane Width (ft)												
Walking Speed (ft/s)												
Percent Blockage												
Right turn flare (veh)												
Median type		None			None							
Median storage veh)												
Upstream signal (ft)												
pX, platoon unblocked												
vC, conflicting volume	960			680			1160	1635	340	1300	1635	480
vC1, stage 1 conf vol												
vC2, stage 2 conf vol												
vCu, unblocked vol	960			680			1160	1635	340	1300	1635	480
tC, single (s)	4.7			4.8			7.5	6.5	6.9	7.5	6.5	6.9
tC, 2 stage (s)												
tF (s)	2.5			2.6			3.5	4.0	3.3	3.5	4.0	3.3
p0 queue free %	100			100			100	100	98	100	100	98
cM capacity (veh/h)	568			714			148	100	656	117	100	532

Direction, Lane #	EB 1	EB 2	WB 1	WB 2	NB 1	SB 1
Volume Total	447	233	633	327	10	10
Volume Left	0	0	0	0	0	0
Volume Right	0	10	0	10	10	10
cSH	1700	1700	1700	1700	656	532
Volume to Capacity	0.26	0.14	0.37	0.19	0.02	0.02
Queue Length 95th (ft)	0	0	0	0	1	1
Control Delay (s)	0.0	0.0	0.0	0.0	10.6	11.9
Lane LOS					B	B
Approach Delay (s)	0.0		0.0		10.6	11.9
Approach LOS					B	B

Intersection Summary			
Average Delay	0.1		
Intersection Capacity Utilization	34.0%	ICU Level of Service	A
Analysis Period (min)	15		

Intersection	
Int Delay, s/veh	0.1

Movement	EBL	EBT	EBR	WBL	WBT	WBR	NBL	NBT	NBR	SBL	SBT	SBR
Traffic Vol, veh/h	0	670	10	0	950	10	0	0	10	0	0	10
Future Vol, veh/h	0	670	10	0	950	10	0	0	10	0	0	10
Conflicting Peds, #/hr	0	0	0	0	0	0	0	0	0	0	0	0
Sign Control	Free	Free	Free	Free	Free	Free	Stop	Stop	Stop	Stop	Stop	Stop
RT Channelized	-	-	None	-	-	None	-	-	None	-	-	None
Storage Length	-	-	-	-	-	-	-	-	0	-	-	0
Veh in Median Storage, #	-	0	-	-	0	-	-	0	-	-	0	-
Grade, %	-	0	-	-	0	-	-	0	-	-	0	-
Peak Hour Factor	100	100	100	100	100	100	100	100	100	100	100	100
Heavy Vehicles, %	29	29	29	36	36	36	2	2	2	2	2	2
Mvmt Flow	0	670	10	0	950	10	0	0	10	0	0	10

Major/Minor	Major1			Major2			Minor1			Minor2		
Conflicting Flow All	960	0	0	680	0	0	1150	1635	340	1290	1635	480
Stage 1	-	-	-	-	-	-	675	675	-	955	955	-
Stage 2	-	-	-	-	-	-	475	960	-	335	680	-
Critical Hdwy	4.68	-	-	4.82	-	-	7.54	6.54	6.94	7.54	6.54	6.94
Critical Hdwy Stg 1	-	-	-	-	-	-	6.54	5.54	-	6.54	5.54	-
Critical Hdwy Stg 2	-	-	-	-	-	-	6.54	5.54	-	6.54	5.54	-
Follow-up Hdwy	2.49	-	-	2.56	-	-	3.52	4.02	3.32	3.52	4.02	3.32
Pot Cap-1 Maneuver	568	-	-	714	-	-	153	100	656	121	100	532
Stage 1	-	-	-	-	-	-	410	451	-	278	335	-
Stage 2	-	-	-	-	-	-	539	333	-	653	449	-
Platoon blocked, %		-	-		-	-						
Mov Cap-1 Maneuver	568	-	-	714	-	-	150	100	656	119	100	532
Mov Cap-2 Maneuver	-	-	-	-	-	-	150	100	-	119	100	-
Stage 1	-	-	-	-	-	-	410	451	-	278	335	-
Stage 2	-	-	-	-	-	-	529	333	-	643	449	-

Approach	EB	WB	NB	SB
HCM Control Delay, s	0	0	10.6	11.9
HCM LOS			B	B

Minor Lane/Major Mvmt	NBLn1	EBL	EBT	EBR	WBL	WBT	WBR	SBLn1
Capacity (veh/h)	656	568	-	-	714	-	-	532
HCM Lane V/C Ratio	0.015	-	-	-	-	-	-	0.019
HCM Control Delay (s)	10.6	0	-	-	0	-	-	11.9
HCM Lane LOS	B	A	-	-	A	-	-	B
HCM 95th %tile Q(veh)	0	0	-	-	0	-	-	0.1

Movement	EBL	EBT	EBR	WBL	WBT	WBR	NBL	NBT	NBR	SBL	SBT	SBR
Lane Configurations												
Traffic Volume (veh/h)	0	620	110	0	850	10	0	0	10	0	0	50
Future Volume (Veh/h)	0	620	110	0	850	10	0	0	10	0	0	50
Sign Control		Free			Free			Stop			Stop	
Grade		0%			0%			0%			0%	
Peak Hour Factor	1.00	1.00	1.00	1.00	1.00	1.00	1.00	1.00	1.00	1.00	1.00	1.00
Hourly flow rate (vph)	0	620	110	0	850	10	0	0	10	0	0	50
Pedestrians												
Lane Width (ft)												
Walking Speed (ft/s)												
Percent Blockage												
Right turn flare (veh)												
Median type		None			None							
Median storage veh)												
Upstream signal (ft)												
pX, platoon unblocked												
vC, conflicting volume	860			730			1150	1535	365	1175	1585	430
vC1, stage 1 conf vol												
vC2, stage 2 conf vol												
vCu, unblocked vol	860			730			1150	1535	365	1175	1585	430
tC, single (s)	4.6			4.8			7.5	6.5	6.9	7.5	6.5	6.9
tC, 2 stage (s)												
tF (s)	2.5			2.6			3.5	4.0	3.3	3.5	4.0	3.3
p0 queue free %	100			100			100	100	98	100	100	91
cM capacity (veh/h)	642			678			140	115	632	145	107	573

Direction, Lane #	EB 1	EB 2	WB 1	WB 2	NB 1	SB 1
Volume Total	413	317	567	293	10	50
Volume Left	0	0	0	0	0	0
Volume Right	0	110	0	10	10	50
cSH	1700	1700	1700	1700	632	573
Volume to Capacity	0.24	0.19	0.33	0.17	0.02	0.09
Queue Length 95th (ft)	0	0	0	0	1	7
Control Delay (s)	0.0	0.0	0.0	0.0	10.8	11.9
Lane LOS					B	B
Approach Delay (s)	0.0		0.0		10.8	11.9
Approach LOS					B	B

Intersection Summary			
Average Delay	0.4		
Intersection Capacity Utilization	31.5%	ICU Level of Service	A
Analysis Period (min)	15		

Intersection	
Int Delay, s/veh	0.4

Movement	EBL	EBT	EBR	WBL	WBT	WBR	NBL	NBT	NBR	SBL	SBT	SBR
Traffic Vol, veh/h	0	620	110	0	850	10	0	0	10	0	0	50
Future Vol, veh/h	0	620	110	0	850	10	0	0	10	0	0	50
Conflicting Peds, #/hr	0	0	0	0	0	0	0	0	0	0	0	0
Sign Control	Free	Free	Free	Free	Free	Free	Stop	Stop	Stop	Stop	Stop	Stop
RT Channelized	-	-	None	-	-	None	-	-	None	-	-	None
Storage Length	-	-	-	-	-	-	-	-	0	-	-	0
Veh in Median Storage, #	-	0	-	-	0	-	-	0	-	-	0	-
Grade, %	-	0	-	-	0	-	-	0	-	-	0	-
Peak Hour Factor	100	100	100	100	100	100	100	100	100	100	100	100
Heavy Vehicles, %	26	26	26	36	36	36	2	2	2	2	2	2
Mvmt Flow	0	620	110	0	850	10	0	0	10	0	0	50

Major/Minor	Major1			Major2			Minor1			Minor2		
Conflicting Flow All	860	0	0	730	0	0	1100	1535	365	1165	1585	430
Stage 1	-	-	-	-	-	-	675	675	-	855	855	-
Stage 2	-	-	-	-	-	-	425	860	-	310	730	-
Critical Hdwy	4.62	-	-	4.82	-	-	7.54	6.54	6.94	7.54	6.54	6.94
Critical Hdwy Stg 1	-	-	-	-	-	-	6.54	5.54	-	6.54	5.54	-
Critical Hdwy Stg 2	-	-	-	-	-	-	6.54	5.54	-	6.54	5.54	-
Follow-up Hdwy	2.46	-	-	2.56	-	-	3.52	4.02	3.32	3.52	4.02	3.32
Pot Cap-1 Maneuver	642	-	-	678	-	-	167	115	632	149	107	573
Stage 1	-	-	-	-	-	-	410	451	-	319	373	-
Stage 2	-	-	-	-	-	-	578	371	-	675	426	-
Platoon blocked, %		-	-		-	-						
Mov Cap-1 Maneuver	642	-	-	678	-	-	152	115	632	147	107	573
Mov Cap-2 Maneuver	-	-	-	-	-	-	152	115	-	147	107	-
Stage 1	-	-	-	-	-	-	410	451	-	319	373	-
Stage 2	-	-	-	-	-	-	528	371	-	664	426	-

Approach	EB	WB	NB	SB
HCM Control Delay, s	0	0	10.8	11.9
HCM LOS			B	B

Minor Lane/Major Mvmt	NBLn1	EBL	EBT	EBR	WBL	WBT	WBR	SBLn1
Capacity (veh/h)	632	642	-	-	678	-	-	573
HCM Lane V/C Ratio	0.016	-	-	-	-	-	-	0.087
HCM Control Delay (s)	10.8	0	-	-	0	-	-	11.9
HCM Lane LOS	B	A	-	-	A	-	-	B
HCM 95th %tile Q(veh)	0	0	-	-	0	-	-	0.3

Movement	EBL	EBT	EBR	WBL	WBT	WBR	NBL	NBT	NBR	SBL	SBT	SBR
Lane Configurations												
Traffic Volume (veh/h)	0	630	10	0	850	10	0	0	10	0	0	10
Future Volume (Veh/h)	0	630	10	0	850	10	0	0	10	0	0	10
Sign Control		Free			Free			Stop			Stop	
Grade		0%			0%			0%			0%	
Peak Hour Factor	1.00	1.00	1.00	1.00	1.00	1.00	1.00	1.00	1.00	1.00	1.00	1.00
Hourly flow rate (vph)	0	630	10	0	850	10	0	0	10	0	0	10
Pedestrians												
Lane Width (ft)												
Walking Speed (ft/s)												
Percent Blockage												
Right turn flare (veh)												
Median type		None			None							
Median storage veh)												
Upstream signal (ft)												
pX, platoon unblocked												
vC, conflicting volume	860			640			1070	1495	320	1180	1495	430
vC1, stage 1 conf vol												
vC2, stage 2 conf vol												
vCu, unblocked vol	860			640			1070	1495	320	1180	1495	430
tC, single (s)	4.6			4.8			7.5	6.5	6.9	7.5	6.5	6.9
tC, 2 stage (s)												
tF (s)	2.5			2.6			3.5	4.0	3.3	3.5	4.0	3.3
p0 queue free %	100			100			100	100	99	100	100	98
cM capacity (veh/h)	642			743			172	122	676	143	122	573

Direction, Lane #	EB 1	EB 2	WB 1	WB 2	NB 1	SB 1
Volume Total	420	220	567	293	10	10
Volume Left	0	0	0	0	0	0
Volume Right	0	10	0	10	10	10
cSH	1700	1700	1700	1700	676	573
Volume to Capacity	0.25	0.13	0.33	0.17	0.01	0.02
Queue Length 95th (ft)	0	0	0	0	1	1
Control Delay (s)	0.0	0.0	0.0	0.0	10.4	11.4
Lane LOS					B	B
Approach Delay (s)	0.0		0.0		10.4	11.4
Approach LOS					B	B

Intersection Summary			
Average Delay	0.1		
Intersection Capacity Utilization	31.5%	ICU Level of Service	A
Analysis Period (min)	15		

Intersection	
Int Delay, s/veh	0.1

Movement	EBL	EBT	EBR	WBL	WBT	WBR	NBL	NBT	NBR	SBL	SBT	SBR
Traffic Vol, veh/h	0	630	10	0	850	10	0	0	10	0	0	10
Future Vol, veh/h	0	630	10	0	850	10	0	0	10	0	0	10
Conflicting Peds, #/hr	0	0	0	0	0	0	0	0	0	0	0	0
Sign Control	Free	Free	Free	Free	Free	Free	Stop	Stop	Stop	Stop	Stop	Stop
RT Channelized	-	-	None	-	-	None	-	-	None	-	-	None
Storage Length	-	-	-	-	-	-	-	-	0	-	-	0
Veh in Median Storage, #	-	0	-	-	0	-	-	0	-	-	0	-
Grade, %	-	0	-	-	0	-	-	0	-	-	0	-
Peak Hour Factor	100	100	100	100	100	100	100	100	100	100	100	100
Heavy Vehicles, %	26	26	26	36	36	36	2	2	2	2	2	2
Mvmt Flow	0	630	10	0	850	10	0	0	10	0	0	10

Major/Minor	Major1			Major2			Minor1			Minor2		
Conflicting Flow All	860	0	0	640	0	0	1060	1495	320	1170	1495	430
Stage 1	-	-	-	-	-	-	635	635	-	855	855	-
Stage 2	-	-	-	-	-	-	425	860	-	315	640	-
Critical Hdwy	4.62	-	-	4.82	-	-	7.54	6.54	6.94	7.54	6.54	6.94
Critical Hdwy Stg 1	-	-	-	-	-	-	6.54	5.54	-	6.54	5.54	-
Critical Hdwy Stg 2	-	-	-	-	-	-	6.54	5.54	-	6.54	5.54	-
Follow-up Hdwy	2.46	-	-	2.56	-	-	3.52	4.02	3.32	3.52	4.02	3.32
Pot Cap-1 Maneuver	642	-	-	743	-	-	178	122	676	148	122	573
Stage 1	-	-	-	-	-	-	433	471	-	319	373	-
Stage 2	-	-	-	-	-	-	578	371	-	671	468	-
Platoon blocked, %		-	-		-	-						
Mov Cap-1 Maneuver	642	-	-	743	-	-	175	122	676	146	122	573
Mov Cap-2 Maneuver	-	-	-	-	-	-	175	122	-	146	122	-
Stage 1	-	-	-	-	-	-	433	471	-	319	373	-
Stage 2	-	-	-	-	-	-	568	371	-	661	468	-

Approach	EB	WB	NB	SB
HCM Control Delay, s	0	0	10.4	11.4
HCM LOS			B	B

Minor Lane/Major Mvmt	NBLn1	EBL	EBT	EBR	WBL	WBT	WBR	SBLn1
Capacity (veh/h)	676	642	-	-	743	-	-	573
HCM Lane V/C Ratio	0.015	-	-	-	-	-	-	0.017
HCM Control Delay (s)	10.4	0	-	-	0	-	-	11.4
HCM Lane LOS	B	A	-	-	A	-	-	B
HCM 95th %tile Q(veh)	0	0	-	-	0	-	-	0.1

Movement	EBL	EBT	EBR	WBL	WBT	WBR	NBL	NBT	NBR	SBL	SBT	SBR
Lane Configurations												
Traffic Volume (veh/h)	0	640	10	0	760	10	0	0	10	0	0	10
Future Volume (Veh/h)	0	640	10	0	760	10	0	0	10	0	0	10
Sign Control		Free			Free			Stop			Stop	
Grade		0%			0%			0%			0%	
Peak Hour Factor	1.00	1.00	1.00	1.00	1.00	1.00	1.00	1.00	1.00	1.00	1.00	1.00
Hourly flow rate (vph)	0	640	10	0	760	10	0	0	10	0	0	10
Pedestrians												
Lane Width (ft)												
Walking Speed (ft/s)												
Percent Blockage												
Right turn flare (veh)												
Median type		None			None							
Median storage veh)												
Upstream signal (ft)												
pX, platoon unblocked												
vC, conflicting volume	770			650			1035	1415	325	1095	1415	385
vC1, stage 1 conf vol												
vC2, stage 2 conf vol												
vCu, unblocked vol	770			650			1035	1415	325	1095	1415	385
tC, single (s)	4.1			4.1			7.5	6.5	6.9	7.5	6.5	6.9
tC, 2 stage (s)												
tF (s)	2.2			2.2			3.5	4.0	3.3	3.5	4.0	3.3
p0 queue free %	100			100			100	100	99	100	100	98
cM capacity (veh/h)	840			932			183	136	671	166	136	613

Direction, Lane #	EB 1	EB 2	WB 1	WB 2	NB 1	SB 1
Volume Total	427	223	507	263	10	10
Volume Left	0	0	0	0	0	0
Volume Right	0	10	0	10	10	10
cSH	1700	1700	1700	1700	671	613
Volume to Capacity	0.25	0.13	0.30	0.15	0.01	0.02
Queue Length 95th (ft)	0	0	0	0	1	1
Control Delay (s)	0.0	0.0	0.0	0.0	10.4	11.0
Lane LOS					B	B
Approach Delay (s)	0.0		0.0		10.4	11.0
Approach LOS					B	B

Intersection Summary			
Average Delay	0.1		
Intersection Capacity Utilization	29.3%	ICU Level of Service	A
Analysis Period (min)	15		

Intersection	
Int Delay, s/veh	0.1

Movement	EBL	EBT	EBR	WBL	WBT	WBR	NBL	NBT	NBR	SBL	SBT	SBR
Traffic Vol, veh/h	0	640	10	0	760	10	0	0	10	0	0	10
Future Vol, veh/h	0	640	10	0	760	10	0	0	10	0	0	10
Conflicting Peds, #/hr	0	0	0	0	0	0	0	0	0	0	0	0
Sign Control	Free	Free	Free	Free	Free	Free	Stop	Stop	Stop	Stop	Stop	Stop
RT Channelized	-	-	None	-	-	None	-	-	None	-	-	None
Storage Length	-	-	-	-	-	-	-	-	0	-	-	0
Veh in Median Storage, #	-	0	-	-	0	-	-	0	-	-	0	-
Grade, %	-	0	-	-	0	-	-	0	-	-	0	-
Peak Hour Factor	100	100	100	100	100	100	100	100	100	100	100	100
Heavy Vehicles, %	2	2	2	2	2	2	2	2	2	2	2	2
Mvmt Flow	0	640	10	0	760	10	0	0	10	0	0	10

Major/Minor	Major1			Major2			Minor1			Minor2		
Conflicting Flow All	770	0	0	650	0	0	1025	1415	325	1085	1415	385
Stage 1	-	-	-	-	-	-	645	645	-	765	765	-
Stage 2	-	-	-	-	-	-	380	770	-	320	650	-
Critical Hdwy	4.14	-	-	4.14	-	-	7.54	6.54	6.94	7.54	6.54	6.94
Critical Hdwy Stg 1	-	-	-	-	-	-	6.54	5.54	-	6.54	5.54	-
Critical Hdwy Stg 2	-	-	-	-	-	-	6.54	5.54	-	6.54	5.54	-
Follow-up Hdwy	2.22	-	-	2.22	-	-	3.52	4.02	3.32	3.52	4.02	3.32
Pot Cap-1 Maneuver	840	-	-	932	-	-	189	136	671	171	136	613
Stage 1	-	-	-	-	-	-	427	466	-	362	410	-
Stage 2	-	-	-	-	-	-	614	408	-	666	463	-
Platoon blocked, %		-	-		-	-						
Mov Cap-1 Maneuver	840	-	-	932	-	-	186	136	671	168	136	613
Mov Cap-2 Maneuver	-	-	-	-	-	-	186	136	-	168	136	-
Stage 1	-	-	-	-	-	-	427	466	-	362	410	-
Stage 2	-	-	-	-	-	-	604	408	-	656	463	-

Approach	EB	WB	NB	SB
HCM Control Delay, s	0	0	10.4	11
HCM LOS			B	B

Minor Lane/Major Mvmt	NBLn1	EBL	EBT	EBR	WBL	WBT	WBR	SBLn1
Capacity (veh/h)	671	840	-	-	932	-	-	613
HCM Lane V/C Ratio	0.015	-	-	-	-	-	-	0.016
HCM Control Delay (s)	10.4	0	-	-	0	-	-	11
HCM Lane LOS	B	A	-	-	A	-	-	B
HCM 95th %tile Q(veh)	0	0	-	-	0	-	-	0.1

Movement	EBL	EBT	EBR	WBL	WBT	WBR	NBL	NBT	NBR	SBL	SBT	SBR
Right Turn Channelized			MOYes									MOYes
Traffic Volume (veh/h)	0	170	0	20	520	0	0	0	0	20	0	0
Future Volume (veh/h)	0	170	0	20	520	0	0	0	0	20	0	0
Peak Hour Factor	1.00	1.00	1.00	1.00	1.00	1.00	1.00	1.00	1.00	1.00	1.00	1.00
Hourly flow rate (vph)	0	170	0	20	520	0	0	0	0	20	0	0
Approach Volume (veh/h)		170			540			0			20	
Crossing Volume (veh/h)		40			0			190			540	
High Capacity (veh/h)		1342			1385			1193			904	
High v/c (veh/h)		0.13			0.39			0.00			0.02	
Low Capacity (veh/h)		1123			1161			988			728	
Low v/c (veh/h)		0.15			0.47			0.00			0.03	

Intersection Summary			
Maximum v/c High	0.39		
Maximum v/c Low	0.47		
Intersection Capacity Utilization	47.2%	ICU Level of Service	A

Intersection	
Intersection Delay, s/veh	14.9
Intersection LOS	B

Approach	EB	WB	NB	SB
Entry Lanes	1	1	0	1
Conflicting Circle Lanes	1	1	1	1
Adj Approach Flow, veh/h	170	540	0	20
Demand Flow Rate, veh/h	235	778	0	28
Vehicles Circulating, veh/h	57	0	263	778
Vehicles Exiting, veh/h	749	263	29	0
Follow-Up Headway, s	3.186	3.186	3.186	3.186
Ped Vol Crossing Leg, #/h	0	0	0	0
Ped Cap Adj	1.000	1.000	1.000	1.000
Approach Delay, s/veh	7.1	17.5	0.0	10.5
Approach LOS	A	C	-	B

Lane	Left	Bypass	Left	Left	Bypass
Designated Moves	T	R	LT	L	R
Assumed Moves	T	R	LT	L	R
RT Channelized		Free			Free
Lane Util	1.000		1.000	1.000	
Critical Headway, s	5.193		5.193	5.193	
Entry Flow, veh/h	235	0	778	28	0
Cap Entry Lane, veh/h	1067	2898	1130	519	3024
Entry HV Adj Factor	0.725	0.725	0.694	0.714	0.694
Flow Entry, veh/h	170	0	540	20	0
Cap Entry, veh/h	773	2100	784	371	2100
V/C Ratio	0.220	0.000	0.689	0.054	0.000
Control Delay, s/veh	7.1	0.0	17.5	10.5	0.0
LOS	A	A	C	B	A
95th %tile Queue, veh	1	0	6	0	0

Movement	EBL	EBT	EBR	WBL	WBT	WBR	NBL	NBT	NBR	SBL	SBT	SBR
Right Turn Channelized			MOYes			MOYes			MOYes			
Traffic Volume (veh/h)	0	70	0	0	150	0	410	0	0	0	0	0
Future Volume (veh/h)	0	70	0	0	150	0	410	0	0	0	0	0
Peak Hour Factor	1.00	1.00	1.00	1.00	1.00	1.00	1.00	1.00	1.00	1.00	1.00	1.00
Hourly flow rate (vph)	0	70	0	0	150	0	410	0	0	0	0	0
Approach Volume (veh/h)		70			150			410			0	
Crossing Volume (veh/h)		0			410			70			560	
High Capacity (veh/h)		1385			1003			1311			890	
High v/c (veh/h)		0.05			0.15			0.31			0.00	
Low Capacity (veh/h)		1161			816			1094			716	
Low v/c (veh/h)		0.06			0.18			0.37			0.00	

Intersection Summary			
Maximum v/c High	0.31		
Maximum v/c Low	0.37		
Intersection Capacity Utilization	45.0%	ICU Level of Service	A

Intersection	
Intersection Delay, s/veh	13.4
Intersection LOS	B

Approach	EB	WB	NB	SB
Entry Lanes	1	1	1	0
Conflicting Circle Lanes	1	1	1	1
Adj Approach Flow, veh/h	70	150	410	0
Demand Flow Rate, veh/h	97	216	590	0
Vehicles Circulating, veh/h	0	590	97	806
Vehicles Exiting, veh/h	806	97	0	0
Follow-Up Headway, s	3.186	3.186	3.186	3.186
Ped Vol Crossing Leg, #/h	0	0	0	0
Ped Cap Adj	1.000	1.000	1.000	1.000
Approach Delay, s/veh	5.2	14.3	14.5	0.0
Approach LOS	A	B	B	-

Lane	Left	Bypass	Left	Bypass	Left	Bypass
Designated Moves	T	R	T	R	L	R
Assumed Moves	T	R	T	R	L	R
RT Channelized		Free		Free		Free
Lane Util	1.000		1.000		1.000	
Critical Headway, s	5.193		5.193		5.193	
Entry Flow, veh/h	97	0	216	0	590	0
Cap Entry Lane, veh/h	1130	2898	626	3024	1025	2142
Entry HV Adj Factor	0.725	0.725	0.694	0.694	0.695	0.980
Flow Entry, veh/h	70	0	150	0	410	0
Cap Entry, veh/h	819	2100	435	2100	713	2100
V/C Ratio	0.086	0.000	0.345	0.000	0.575	0.000
Control Delay, s/veh	5.2	0.0	14.3	0.0	14.5	0.0
LOS	A	A	B	A	B	A
95th %tile Queue, veh	0	0	2	0	4	0

Movement	EBL	EBT	EBR	WBL	WBT	WBR	NBL	NBT	NBR	SBL	SBT	SBR
Lane Configurations												
Traffic Volume (veh/h)	110	0	0	0	0	0	0	0	0	120	0	0
Future Volume (Veh/h)	110	0	0	0	0	0	0	0	0	120	0	0
Sign Control		Stop			Stop			Free			Free	
Grade		0%			0%			0%			0%	
Peak Hour Factor	1.00	1.00	1.00	1.00	1.00	1.00	1.00	1.00	1.00	1.00	1.00	1.00
Hourly flow rate (vph)	110	0	0	0	0	0	0	0	0	120	0	0
Pedestrians												
Lane Width (ft)												
Walking Speed (ft/s)												
Percent Blockage												
Right turn flare (veh)												
Median type								None			None	
Median storage veh)												
Upstream signal (ft)												
pX, platoon unblocked												
vC, conflicting volume	240	240	0	240	240	0	0			0		
vC1, stage 1 conf vol												
vC2, stage 2 conf vol												
vCu, unblocked vol	240	240	0	240	240	0	0			0		
tC, single (s)	7.1	6.5	6.2	7.1	6.5	6.2	4.1			4.1		
tC, 2 stage (s)												
tF (s)	3.5	4.0	3.3	3.5	4.0	3.3	2.2			2.2		
p0 queue free %	84	100	100	100	100	100	100			93		
cM capacity (veh/h)	674	612	1085	674	612	1085	1623			1623		

Direction, Lane #	EB 1	NB 1	SB 1
Volume Total	110	0	120
Volume Left	110	0	120
Volume Right	0	0	0
cSH	674	1700	1623
Volume to Capacity	0.16	0.00	0.07
Queue Length 95th (ft)	15	0	6
Control Delay (s)	11.4	0.0	7.4
Lane LOS	B		A
Approach Delay (s)	11.4	0.0	7.4
Approach LOS	B		

Intersection Summary			
Average Delay	9.3		
Intersection Capacity Utilization	32.4%	ICU Level of Service	A
Analysis Period (min)	15		

Intersection	
Int Delay, s/veh	0

Movement	EBL	EBT	EBR	WBL	WBT	WBR	NBL	NBT	NBR	SBL	SBT	SBR
Traffic Vol, veh/h	110	0	0	0	0	0	0	0	0	120	0	0
Future Vol, veh/h	110	0	0	0	0	0	0	0	0	120	0	0
Conflicting Peds, #/hr	0	0	0	0	0	0	0	0	0	0	0	0
Sign Control	Stop	Stop	Stop	Stop	Stop	Stop	Free	Free	Free	Free	Free	Free
RT Channelized	-	-	None	-	-	None	-	-	None	-	-	None
Storage Length	-	-	-	-	-	-	-	-	-	-	-	-
Veh in Median Storage, #	-	0	-	-	0	-	-	0	-	-	0	-
Grade, %	-	0	-	-	0	-	-	0	-	-	0	-
Peak Hour Factor	100	100	100	100	100	100	100	100	100	100	100	100
Heavy Vehicles, %	2	2	2	2	2	2	2	2	2	2	2	2
Mvmt Flow	110	0	0	0	0	0	0	0	0	120	0	0

Major/Minor	Minor2			Major1			Major2		
Conflicting Flow All	0	240	0	0	0	0	0	0	0
Stage 1	0	240	-	-	-	-	-	-	-
Stage 2	0	0	-	-	-	-	-	-	-
Critical Hdwy	6.42	6.52	-	-	-	-	4.12	-	-
Critical Hdwy Stg 1	-	-	-	-	-	-	-	-	-
Critical Hdwy Stg 2	5.42	5.52	-	-	-	-	-	-	-
Follow-up Hdwy	3.518	4.018	-	-	-	-	2.218	-	-
Pot Cap-1 Maneuver	-	661	-	-	-	-	-	-	-
Stage 1	-	-	-	-	-	-	-	-	-
Stage 2	-	-	-	-	-	-	-	-	-
Platoon blocked, %					-	-		-	-
Mov Cap-1 Maneuver	-	0	-	-	-	-	-	-	-
Mov Cap-2 Maneuver	-	0	-	-	-	-	-	-	-
Stage 1	-	0	-	-	-	-	-	-	-
Stage 2	-	0	-	-	-	-	-	-	-

Approach	EB	NB	SB
HCM Control Delay, s		0	
HCM LOS	-		

Minor Lane/Major Mvmt	NBL	NBT	NBR	EBLn1	SBL	SBT	SBR
Capacity (veh/h)	-	-	-	-	-	-	-
HCM Lane V/C Ratio	-	-	-	-	-	-	-
HCM Control Delay (s)	0	-	-	-	-	-	-
HCM Lane LOS	A	-	-	-	-	-	-
HCM 95th %tile Q(veh)	-	-	-	-	-	-	-

Movement	EBL	EBT	EBR	WBL	WBT	WBR	NBL	NBT	NBR	SBL	SBT	SBR
Lane Configurations												
Traffic Volume (veh/h)	0	0	0	0	0	80	0	110	0	0	120	280
Future Volume (Veh/h)	0	0	0	0	0	80	0	110	0	0	120	280
Sign Control		Stop			Stop			Free			Free	
Grade		0%			0%			0%			0%	
Peak Hour Factor	1.00	1.00	1.00	1.00	1.00	1.00	1.00	1.00	1.00	1.00	1.00	1.00
Hourly flow rate (vph)	0	0	0	0	0	80	0	110	0	0	120	280
Pedestrians												
Lane Width (ft)												
Walking Speed (ft/s)												
Percent Blockage												
Right turn flare (veh)												
Median type								None			None	
Median storage veh)												
Upstream signal (ft)												
pX, platoon unblocked												
vC, conflicting volume	450	370	260	370	510	110	400			110		
vC1, stage 1 conf vol												
vC2, stage 2 conf vol												
vCu, unblocked vol	450	370	260	370	510	110	400			110		
tC, single (s)	7.1	6.5	6.2	7.1	6.5	6.2	4.1			4.1		
tC, 2 stage (s)												
tF (s)	3.5	4.0	3.3	3.5	4.0	3.3	2.2			2.2		
p0 queue free %	100	100	100	100	100	92	100			100		
cM capacity (veh/h)	475	560	779	587	467	943	1159			1480		

Direction, Lane #	WB 1	NB 1	SB 1
Volume Total	80	110	400
Volume Left	0	0	0
Volume Right	80	0	280
cSH	943	1700	1700
Volume to Capacity	0.08	0.06	0.24
Queue Length 95th (ft)	7	0	0
Control Delay (s)	9.2	0.0	0.0
Lane LOS	A		
Approach Delay (s)	9.2	0.0	0.0
Approach LOS	A		

Intersection Summary			
Average Delay	1.2		
Intersection Capacity Utilization	32.4%	ICU Level of Service	A
Analysis Period (min)	15		

Intersection	
Int Delay, s/veh	1.2

Movement	EBL	EBT	EBR	WBL	WBT	WBR	NBL	NBT	NBR	SBL	SBT	SBR
Traffic Vol, veh/h	0	0	0	0	0	80	0	110	0	0	120	280
Future Vol, veh/h	0	0	0	0	0	80	0	110	0	0	120	280
Conflicting Peds, #/hr	0	0	0	0	0	0	0	0	0	0	0	0
Sign Control	Stop	Stop	Stop	Stop	Stop	Stop	Free	Free	Free	Free	Free	Free
RT Channelized	-	-	None	-	-	None	-	-	None	-	-	None
Storage Length	-	-	-	-	-	-	-	-	-	-	-	-
Veh in Median Storage, #	-	0	-	-	0	-	-	0	-	-	0	-
Grade, %	-	0	-	-	0	-	-	0	-	-	0	-
Peak Hour Factor	100	100	100	100	100	100	100	100	100	100	100	100
Heavy Vehicles, %	2	2	2	2	2	2	2	2	2	2	2	2
Mvmt Flow	0	0	0	0	0	80	0	110	0	0	120	280

Major/Minor	Minor1			Major1			Major2		
Conflicting Flow All	370	510	110	400	0	0	110	0	0
Stage 1	110	110	-	-	-	-	-	-	-
Stage 2	260	400	-	-	-	-	-	-	-
Critical Hdwy	6.42	6.52	6.22	4.12	-	-	4.12	-	-
Critical Hdwy Stg 1	5.42	5.52	-	-	-	-	-	-	-
Critical Hdwy Stg 2	5.42	5.52	-	-	-	-	-	-	-
Follow-up Hdwy	3.518	4.018	3.318	2.218	-	-	2.218	-	-
Pot Cap-1 Maneuver	630	467	943	1159	-	-	1480	-	-
Stage 1	915	804	-	-	-	-	-	-	-
Stage 2	783	602	-	-	-	-	-	-	-
Platoon blocked, %					-	-		-	-
Mov Cap-1 Maneuver	630	0	943	1159	-	-	1480	-	-
Mov Cap-2 Maneuver	630	0	-	-	-	-	-	-	-
Stage 1	915	0	-	-	-	-	-	-	-
Stage 2	783	0	-	-	-	-	-	-	-

Approach	WB	NB	SB
HCM Control Delay, s	9.2	0	0
HCM LOS	A		

Minor Lane/Major Mvmt	NBL	NBT	NBR	WBLn1	SBL	SBT	SBR
Capacity (veh/h)	1159	-	-	943	1480	-	-
HCM Lane V/C Ratio	-	-	-	0.085	-	-	-
HCM Control Delay (s)	0	-	-	9.2	0	-	-
HCM Lane LOS	A	-	-	A	A	-	-
HCM 95th %tile Q(veh)	0	-	-	0.3	0	-	-

Movement	EBL	EBT	EBR	WBL	WBT	WBR	NBL	NBT	NBR	SBL	SBT	SBR
Right Turn Channelized			MOYes						MOYes			
Traffic Volume (veh/h)	80	0	50	0	0	0	0	40	20	190	110	0
Future Volume (veh/h)	80	0	50	0	0	0	0	40	20	190	110	0
Peak Hour Factor	1.00	1.00	1.00	1.00	1.00	1.00	1.00	1.00	1.00	1.00	1.00	1.00
Hourly flow rate (vph)	80	0	50	0	0	0	0	40	20	190	110	0
Approach Volume (veh/h)		80			0			40			300	
Crossing Volume (veh/h)		300			120			270			0	
High Capacity (veh/h)		1094			1261			1121			1385	
High v/c (veh/h)		0.07			0.00			0.04			0.22	
Low Capacity (veh/h)		898			1049			922			1161	
Low v/c (veh/h)		0.09			0.00			0.04			0.26	

Intersection Summary			
Maximum v/c High	0.22		
Maximum v/c Low	0.26		
Intersection Capacity Utilization	32.1%	ICU Level of Service	A

Intersection	
Intersection Delay, s/veh	4.8
Intersection LOS	A

Approach	EB	WB	NB	SB
Entry Lanes	1	0	1	1
Conflicting Circle Lanes	1	1	1	1
Adj Approach Flow, veh/h	130	0	60	300
Demand Flow Rate, veh/h	133	0	61	306
Vehicles Circulating, veh/h	306	123	276	0
Vehicles Exiting, veh/h	0	194	112	123
Follow-Up Headway, s	3.186	3.186	3.186	3.186
Ped Vol Crossing Leg, #/h	0	0	0	0
Ped Cap Adj	1.000	1.000	1.000	1.000
Approach Delay, s/veh	3.3	0.0	3.2	5.8
Approach LOS	A	-	A	A

Lane	Left	Bypass	Left	Bypass	Left
Designated Moves	LT	R	T	R	LT
Assumed Moves	LT	R	T	R	LT
RT Channelized		Free		Free	
Lane Util	1.000		1.000		1.000
Critical Headway, s	5.193		5.193		5.193
Entry Flow, veh/h	82	51	41	20	306
Cap Entry Lane, veh/h	832	2142	857	2142	1130
Entry HV Adj Factor	0.976	0.980	0.980	0.980	0.980
Flow Entry, veh/h	80	50	40	20	300
Cap Entry, veh/h	812	2100	841	2100	1107
V/C Ratio	0.099	0.024	0.048	0.010	0.271
Control Delay, s/veh	5.4	0.0	4.7	0.0	5.8
LOS	A	A	A	A	A
95th %tile Queue, veh	0	0	0	0	1

Movement	EBL	EBT	EBR	WBL	WBT	WBR	NBL	NBT	NBR	SBL	SBT	SBR
Right Turn Channelized						MOYes						MOYes
Traffic Volume (veh/h)	0	0	0	50	0	170	20	180	0	0	140	290
Future Volume (veh/h)	0	0	0	50	0	170	20	180	0	0	140	290
Peak Hour Factor	1.00	1.00	1.00	1.00	1.00	1.00	1.00	1.00	1.00	1.00	1.00	1.00
Hourly flow rate (vph)	0	0	0	50	0	170	20	180	0	0	140	290
Approach Volume (veh/h)		0			50			200			140	
Crossing Volume (veh/h)		190			200			0			70	
High Capacity (veh/h)		1193			1184			1385			1311	
High v/c (veh/h)		0.00			0.04			0.14			0.11	
Low Capacity (veh/h)		988			979			1161			1094	
Low v/c (veh/h)		0.00			0.05			0.17			0.13	

Intersection Summary			
Maximum v/c High	0.14		
Maximum v/c Low	0.17		
Intersection Capacity Utilization	39.2%	ICU Level of Service	A

Intersection	
Intersection Delay, s/veh	2.2
Intersection LOS	A

Approach	EB	WB	NB	SB
Entry Lanes	0	1	1	1
Conflicting Circle Lanes	1	1	1	1
Adj Approach Flow, veh/h	0	220	200	430
Demand Flow Rate, veh/h	0	224	204	439
Vehicles Circulating, veh/h	194	204	0	71
Vehicles Exiting, veh/h	20	0	194	184
Follow-Up Headway, s	3.186	3.186	3.186	3.186
Ped Vol Crossing Leg, #/h	0	0	0	0
Ped Cap Adj	1.000	1.000	1.000	1.000
Approach Delay, s/veh	0.0	1.0	4.9	1.5
Approach LOS	-	A	A	A

Lane	Left	Bypass	Left	Left	Bypass
Designated Moves	LT	R	LT	T	R
Assumed Moves	LT	R	LT	T	R
RT Channelized		Free			Free
Lane Util	1.000		1.000	1.000	
Critical Headway, s	5.193		5.193	5.193	
Entry Flow, veh/h	51	173	204	143	296
Cap Entry Lane, veh/h	921	2142	1130	1052	2142
Entry HV Adj Factor	0.980	0.980	0.982	0.980	0.980
Flow Entry, veh/h	50	170	200	140	290
Cap Entry, veh/h	903	2100	1110	1032	2100
V/C Ratio	0.055	0.081	0.181	0.136	0.138
Control Delay, s/veh	4.5	0.0	4.9	4.7	0.0
LOS	A	A	A	A	A
95th %tile Queue, veh	0	0	1	0	0

Movement	EBL	EBT	EBR	WBL	WBT	WBR	NBL	NBT	NBR	SBL	SBT	SBR
Right Turn Channelized			MOYes						MOYes			
Traffic Volume (veh/h)	170	0	40	0	0	0	0	30	20	180	10	0
Future Volume (veh/h)	170	0	40	0	0	0	0	30	20	180	10	0
Peak Hour Factor	1.00	1.00	1.00	1.00	1.00	1.00	1.00	1.00	1.00	1.00	1.00	1.00
Hourly flow rate (vph)	170	0	40	0	0	0	0	30	20	180	10	0
Approach Volume (veh/h)		170			0			30			190	
Crossing Volume (veh/h)		190			200			350			0	
High Capacity (veh/h)		1193			1184			1052			1385	
High v/c (veh/h)		0.14			0.00			0.03			0.14	
Low Capacity (veh/h)		988			979			860			1161	
Low v/c (veh/h)		0.17			0.00			0.03			0.16	

Intersection Summary			
Maximum v/c High	0.14		
Maximum v/c Low	0.17		
Intersection Capacity Utilization	31.4%	ICU Level of Service	A

Intersection	
Intersection Delay, s/veh	4.5
Intersection LOS	A

Approach	EB	WB	NB	SB
Entry Lanes	1	0	1	1
Conflicting Circle Lanes	1	1	1	1
Adj Approach Flow, veh/h	210	0	50	190
Demand Flow Rate, veh/h	214	0	51	194
Vehicles Circulating, veh/h	194	204	357	0
Vehicles Exiting, veh/h	0	184	10	204
Follow-Up Headway, s	3.186	3.186	3.186	3.186
Ped Vol Crossing Leg, #/h	0	0	0	0
Ped Cap Adj	1.000	1.000	1.000	1.000
Approach Delay, s/veh	4.7	0.0	3.0	4.8
Approach LOS	A	-	A	A

Lane	Left	Bypass	Left	Bypass	Left
Designated Moves	LT	R	T	R	LT
Assumed Moves	LT	R	T	R	LT
RT Channelized		Free		Free	
Lane Util	1.000		1.000		1.000
Critical Headway, s	5.193		5.193		5.193
Entry Flow, veh/h	173	41	31	20	194
Cap Entry Lane, veh/h	931	2142	791	2142	1130
Entry HV Adj Factor	0.983	0.980	0.980	0.980	0.978
Flow Entry, veh/h	170	40	30	20	190
Cap Entry, veh/h	915	2100	775	2100	1106
V/C Ratio	0.186	0.019	0.039	0.010	0.172
Control Delay, s/veh	5.8	0.0	5.0	0.0	4.8
LOS	A	A	A	A	A
95th %tile Queue, veh	1	0	0	0	1

Movement	EBL	EBT	WBT	WBR	SBL	SBR
Lane Configurations						
Traffic Volume (veh/h)	0	950	1090	110	0	0
Future Volume (Veh/h)	0	950	1090	110	0	0
Sign Control		Free	Free		Stop	
Grade		0%	0%		0%	
Peak Hour Factor	1.00	1.00	1.00	1.00	1.00	1.00
Hourly flow rate (vph)	0	950	1090	110	0	0
Pedestrians						
Lane Width (ft)						
Walking Speed (ft/s)						
Percent Blockage						
Right turn flare (veh)						
Median type		None	None			
Median storage veh)						
Upstream signal (ft)						
pX, platoon unblocked						
vC, conflicting volume	1090				1565	545
vC1, stage 1 conf vol						
vC2, stage 2 conf vol						
vCu, unblocked vol	1090				1565	545
tC, single (s)	4.7				6.8	6.9
tC, 2 stage (s)						
tF (s)	2.5				3.5	3.3
p0 queue free %	100				100	100
cM capacity (veh/h)	495				102	482

Direction, Lane #	EB 1	EB 2	WB 1	WB 2	WB 3
Volume Total	475	475	545	545	110
Volume Left	0	0	0	0	0
Volume Right	0	0	0	0	110
cSH	1700	1700	1700	1700	1700
Volume to Capacity	0.28	0.28	0.32	0.32	0.06
Queue Length 95th (ft)	0	0	0	0	0
Control Delay (s)	0.0	0.0	0.0	0.0	0.0
Lane LOS					
Approach Delay (s)	0.0		0.0		
Approach LOS					

Intersection Summary			
Average Delay	0.0		
Intersection Capacity Utilization	33.5%	ICU Level of Service	A
Analysis Period (min)	15		

Movement	EBL	EBT	WBT	WBR	SBL	SBR
Lane Configurations						
Traffic Volume (veh/h)	0	900	1210	10	0	0
Future Volume (Veh/h)	0	900	1210	10	0	0
Sign Control		Free	Free		Stop	
Grade		0%	0%		0%	
Peak Hour Factor	1.00	1.00	1.00	1.00	1.00	1.00
Hourly flow rate (vph)	0	900	1210	10	0	0
Pedestrians						
Lane Width (ft)						
Walking Speed (ft/s)						
Percent Blockage						
Right turn flare (veh)						
Median type		None	None			
Median storage veh)						
Upstream signal (ft)						
pX, platoon unblocked						
vC, conflicting volume	1220				1660	605
vC1, stage 1 conf vol						
vC2, stage 2 conf vol						
vCu, unblocked vol	1220				1660	605
tC, single (s)	4.7				6.8	6.9
tC, 2 stage (s)						
tF (s)	2.5				3.5	3.3
p0 queue free %	100				100	100
cM capacity (veh/h)	434				88	441

Direction, Lane #	EB 1	EB 2	WB 1	WB 2	WB 3
Volume Total	450	450	605	605	10
Volume Left	0	0	0	0	0
Volume Right	0	0	0	0	10
cSH	1700	1700	1700	1700	1700
Volume to Capacity	0.26	0.26	0.36	0.36	0.01
Queue Length 95th (ft)	0	0	0	0	0
Control Delay (s)	0.0	0.0	0.0	0.0	0.0
Lane LOS					
Approach Delay (s)	0.0		0.0		
Approach LOS					

Intersection Summary			
Average Delay	0.0		
Intersection Capacity Utilization	36.8%	ICU Level of Service	A
Analysis Period (min)	15		

Movement	EBL	EBT	EBR	WBL	WBT	WBR	NBL	NBT	NBR	SBL	SBT	SBR
Lane Configurations												
Traffic Volume (veh/h)	0	850	50	0	1200	20	0	0	10	0	0	10
Future Volume (Veh/h)	0	850	50	0	1200	20	0	0	10	0	0	10
Sign Control		Free			Free			Stop			Stop	
Grade		0%			0%			0%			0%	
Peak Hour Factor	1.00	1.00	1.00	1.00	1.00	1.00	1.00	1.00	1.00	1.00	1.00	1.00
Hourly flow rate (vph)	0	850	50	0	1200	20	0	0	10	0	0	10
Pedestrians												
Lane Width (ft)												
Walking Speed (ft/s)												
Percent Blockage												
Right turn flare (veh)												
Median type		None			None							
Median storage veh)												
Upstream signal (ft)												
pX, platoon unblocked												
vC, conflicting volume	1220			900			1485	2095	450	1645	2110	610
vC1, stage 1 conf vol												
vC2, stage 2 conf vol												
vCu, unblocked vol	1220			900			1485	2095	450	1645	2110	610
tC, single (s)	4.1			4.1			7.5	6.5	6.9	7.5	6.5	6.9
tC, 2 stage (s)												
tF (s)	2.2			2.2			3.5	4.0	3.3	3.5	4.0	3.3
p0 queue free %	100			100			100	100	98	100	100	98
cM capacity (veh/h)	567			751			84	52	556	64	50	437

Direction, Lane #	EB 1	EB 2	WB 1	WB 2	NB 1	SB 1
Volume Total	567	333	800	420	10	10
Volume Left	0	0	0	0	0	0
Volume Right	0	50	0	20	10	10
cSH	1700	1700	1700	1700	556	437
Volume to Capacity	0.33	0.20	0.47	0.25	0.02	0.02
Queue Length 95th (ft)	0	0	0	0	1	2
Control Delay (s)	0.0	0.0	0.0	0.0	11.6	13.4
Lane LOS					B	B
Approach Delay (s)	0.0		0.0		11.6	13.4
Approach LOS					B	B

Intersection Summary			
Average Delay	0.1		
Intersection Capacity Utilization	43.8%	ICU Level of Service	A
Analysis Period (min)	15		

Intersection	
Int Delay, s/veh	0.1

Movement	EBL	EBT	EBR	WBL	WBT	WBR	NBL	NBT	NBR	SBL	SBT	SBR
Traffic Vol, veh/h	0	850	50	0	1200	20	0	0	10	0	0	10
Future Vol, veh/h	0	850	50	0	1200	20	0	0	10	0	0	10
Conflicting Peds, #/hr	0	0	0	0	0	0	0	0	0	0	0	0
Sign Control	Free	Free	Free	Free	Free	Free	Stop	Stop	Stop	Stop	Stop	Stop
RT Channelized	-	-	None	-	-	None	-	-	None	-	-	None
Storage Length	-	-	-	-	-	-	-	-	0	-	-	0
Veh in Median Storage, #	-	0	-	-	0	-	-	0	-	-	0	-
Grade, %	-	0	-	-	0	-	-	0	-	-	0	-
Peak Hour Factor	100	100	100	100	100	100	100	100	100	100	100	100
Heavy Vehicles, %	2	2	2	2	2	2	2	2	2	2	2	2
Mvmt Flow	0	850	50	0	1200	20	0	0	10	0	0	10

Major/Minor	Major1			Major2			Minor1			Minor2		
Conflicting Flow All	1220	0	0	900	0	0	1475	2095	450	1635	2110	610
Stage 1	-	-	-	-	-	-	875	875	-	1210	1210	-
Stage 2	-	-	-	-	-	-	600	1220	-	425	900	-
Critical Hdwy	4.14	-	-	4.14	-	-	7.54	6.54	6.94	7.54	6.54	6.94
Critical Hdwy Stg 1	-	-	-	-	-	-	6.54	5.54	-	6.54	5.54	-
Critical Hdwy Stg 2	-	-	-	-	-	-	6.54	5.54	-	6.54	5.54	-
Follow-up Hdwy	2.22	-	-	2.22	-	-	3.52	4.02	3.32	3.52	4.02	3.32
Pot Cap-1 Maneuver	567	-	-	751	-	-	88	52	556	67	50	437
Stage 1	-	-	-	-	-	-	310	365	-	194	254	-
Stage 2	-	-	-	-	-	-	455	251	-	578	355	-
Platoon blocked, %		-	-		-	-						
Mov Cap-1 Maneuver	567	-	-	751	-	-	86	52	556	66	50	437
Mov Cap-2 Maneuver	-	-	-	-	-	-	86	52	-	66	50	-
Stage 1	-	-	-	-	-	-	310	365	-	194	254	-
Stage 2	-	-	-	-	-	-	445	251	-	568	355	-

Approach	EB	WB	NB	SB
HCM Control Delay, s	0	0	11.6	13.4
HCM LOS			B	B

Minor Lane/Major Mvmt	NBLn1	EBL	EBT	EBR	WBL	WBT	WBR	SBLn1
Capacity (veh/h)	556	567	-	-	751	-	-	437
HCM Lane V/C Ratio	0.018	-	-	-	-	-	-	0.023
HCM Control Delay (s)	11.6	0	-	-	0	-	-	13.4
HCM Lane LOS	B	A	-	-	A	-	-	B
HCM 95th %tile Q(veh)	0.1	0	-	-	0	-	-	0.1

Movement	EBL	EBT	EBR	WBL	WBT	WBR	NBL	NBT	NBR	SBL	SBT	SBR
Lane Configurations												
Traffic Volume (veh/h)	0	860	10	0	1220	10	0	0	10	0	0	10
Future Volume (Veh/h)	0	860	10	0	1220	10	0	0	10	0	0	10
Sign Control		Free			Free			Stop			Stop	
Grade		0%			0%			0%			0%	
Peak Hour Factor	1.00	1.00	1.00	1.00	1.00	1.00	1.00	1.00	1.00	1.00	1.00	1.00
Hourly flow rate (vph)	0	860	10	0	1220	10	0	0	10	0	0	10
Pedestrians												
Lane Width (ft)												
Walking Speed (ft/s)												
Percent Blockage												
Right turn flare (veh)												
Median type		None			None							
Median storage veh)												
Upstream signal (ft)												
pX, platoon unblocked												
vC, conflicting volume	1230			870			1485	2095	435	1665	2095	615
vC1, stage 1 conf vol												
vC2, stage 2 conf vol												
vCu, unblocked vol	1230			870			1485	2095	435	1665	2095	615
tC, single (s)	4.1			4.1			7.5	6.5	6.9	7.5	6.5	6.9
tC, 2 stage (s)												
tF (s)	2.2			2.2			3.5	4.0	3.3	3.5	4.0	3.3
p0 queue free %	100			100			100	100	98	100	100	98
cM capacity (veh/h)	562			770			84	52	569	62	52	434

Direction, Lane #	EB 1	EB 2	WB 1	WB 2	NB 1	SB 1
Volume Total	573	297	813	417	10	10
Volume Left	0	0	0	0	0	0
Volume Right	0	10	0	10	10	10
cSH	1700	1700	1700	1700	569	434
Volume to Capacity	0.34	0.17	0.48	0.25	0.02	0.02
Queue Length 95th (ft)	0	0	0	0	1	2
Control Delay (s)	0.0	0.0	0.0	0.0	11.4	13.5
Lane LOS					B	B
Approach Delay (s)	0.0		0.0		11.4	13.5
Approach LOS					B	B

Intersection Summary			
Average Delay	0.1		
Intersection Capacity Utilization	44.0%	ICU Level of Service	A
Analysis Period (min)	15		

Intersection	
Int Delay, s/veh	0.1

Movement	EBL	EBT	EBR	WBL	WBT	WBR	NBL	NBT	NBR	SBL	SBT	SBR
Traffic Vol, veh/h	0	860	10	0	1220	10	0	0	10	0	0	10
Future Vol, veh/h	0	860	10	0	1220	10	0	0	10	0	0	10
Conflicting Peds, #/hr	0	0	0	0	0	0	0	0	0	0	0	0
Sign Control	Free	Free	Free	Free	Free	Free	Stop	Stop	Stop	Stop	Stop	Stop
RT Channelized	-	-	None	-	-	None	-	-	None	-	-	None
Storage Length	-	-	-	-	-	-	-	-	0	-	-	0
Veh in Median Storage, #	-	0	-	-	0	-	-	0	-	-	0	-
Grade, %	-	0	-	-	0	-	-	0	-	-	0	-
Peak Hour Factor	100	100	100	100	100	100	100	100	100	100	100	100
Heavy Vehicles, %	2	2	2	2	2	2	2	2	2	2	2	2
Mvmt Flow	0	860	10	0	1220	10	0	0	10	0	0	10

Major/Minor	Major1			Major2			Minor1			Minor2		
Conflicting Flow All	1230	0	0	870	0	0	1475	2095	435	1655	2095	615
Stage 1	-	-	-	-	-	-	865	865	-	1225	1225	-
Stage 2	-	-	-	-	-	-	610	1230	-	430	870	-
Critical Hdwy	4.14	-	-	4.14	-	-	7.54	6.54	6.94	7.54	6.54	6.94
Critical Hdwy Stg 1	-	-	-	-	-	-	6.54	5.54	-	6.54	5.54	-
Critical Hdwy Stg 2	-	-	-	-	-	-	6.54	5.54	-	6.54	5.54	-
Follow-up Hdwy	2.22	-	-	2.22	-	-	3.52	4.02	3.32	3.52	4.02	3.32
Pot Cap-1 Maneuver	562	-	-	770	-	-	88	52	569	64	52	434
Stage 1	-	-	-	-	-	-	315	369	-	190	249	-
Stage 2	-	-	-	-	-	-	448	248	-	574	367	-
Platoon blocked, %		-	-		-	-						
Mov Cap-1 Maneuver	562	-	-	770	-	-	86	52	569	63	52	434
Mov Cap-2 Maneuver	-	-	-	-	-	-	86	52	-	63	52	-
Stage 1	-	-	-	-	-	-	315	369	-	190	249	-
Stage 2	-	-	-	-	-	-	438	248	-	564	367	-

Approach	EB	WB	NB	SB
HCM Control Delay, s	0	0	11.4	13.5
HCM LOS			B	B

Minor Lane/Major Mvmt	NBLn1	EBL	EBT	EBR	WBL	WBT	WBR	SBLn1
Capacity (veh/h)	569	562	-	-	770	-	-	434
HCM Lane V/C Ratio	0.018	-	-	-	-	-	-	0.023
HCM Control Delay (s)	11.4	0	-	-	0	-	-	13.5
HCM Lane LOS	B	A	-	-	A	-	-	B
HCM 95th %tile Q(veh)	0.1	0	-	-	0	-	-	0.1

Movement	EBL	EBT	EBR	WBL	WBT	WBR	NBL	NBT	NBR	SBL	SBT	SBR
Lane Configurations												
Traffic Volume (veh/h)	0	810	50	0	1210	10	0	0	80	0	0	10
Future Volume (Veh/h)	0	810	50	0	1210	10	0	0	80	0	0	10
Sign Control		Free			Free			Stop			Stop	
Grade		0%			0%			0%			0%	
Peak Hour Factor	1.00	1.00	1.00	1.00	1.00	1.00	1.00	1.00	1.00	1.00	1.00	1.00
Hourly flow rate (vph)	0	810	50	0	1210	10	0	0	80	0	0	10
Pedestrians												
Lane Width (ft)												
Walking Speed (ft/s)												
Percent Blockage												
Right turn flare (veh)												
Median type		None			None							
Median storage veh)												
Upstream signal (ft)												
pX, platoon unblocked												
vC, conflicting volume	1220			860			1450	2055	430	1700	2075	610
vC1, stage 1 conf vol												
vC2, stage 2 conf vol												
vCu, unblocked vol	1220			860			1450	2055	430	1700	2075	610
tC, single (s)	4.8			4.1			7.5	6.5	6.9	7.5	6.5	6.9
tC, 2 stage (s)												
tF (s)	2.5			2.2			3.5	4.0	3.3	3.5	4.0	3.3
p0 queue free %	100			100			100	100	86	100	100	98
cM capacity (veh/h)	422			777			90	55	573	51	53	437

Direction, Lane #	EB 1	EB 2	WB 1	WB 2	NB 1	SB 1
Volume Total	540	320	807	413	80	10
Volume Left	0	0	0	0	0	0
Volume Right	0	50	0	10	80	10
cSH	1700	1700	1700	1700	573	437
Volume to Capacity	0.32	0.19	0.47	0.24	0.14	0.02
Queue Length 95th (ft)	0	0	0	0	12	2
Control Delay (s)	0.0	0.0	0.0	0.0	12.3	13.4
Lane LOS					B	B
Approach Delay (s)	0.0		0.0		12.3	13.4
Approach LOS					B	B

Intersection Summary			
Average Delay	0.5		
Intersection Capacity Utilization	43.8%	ICU Level of Service	A
Analysis Period (min)	15		

Intersection	
Int Delay, s/veh	0.5

Movement	EBL	EBT	EBR	WBL	WBT	WBR	NBL	NBT	NBR	SBL	SBT	SBR
Traffic Vol, veh/h	0	810	50	0	1210	10	0	0	80	0	0	10
Future Vol, veh/h	0	810	50	0	1210	10	0	0	80	0	0	10
Conflicting Peds, #/hr	0	0	0	0	0	0	0	0	0	0	0	0
Sign Control	Free	Free	Free	Free	Free	Free	Stop	Stop	Stop	Stop	Stop	Stop
RT Channelized	-	-	None	-	-	None	-	-	None	-	-	None
Storage Length	-	-	-	-	-	-	-	-	0	-	-	0
Veh in Median Storage, #	-	0	-	-	0	-	-	0	-	-	0	-
Grade, %	-	0	-	-	0	-	-	0	-	-	0	-
Peak Hour Factor	100	100	100	100	100	100	100	100	100	100	100	100
Heavy Vehicles, %	33	33	2	2	41	41	2	2	2	2	2	2
Mvmt Flow	0	810	50	0	1210	10	0	0	80	0	0	10

Major/Minor	Major1			Major2			Minor1			Minor2		
Conflicting Flow All	1220	0	0	860	0	0	1440	2055	430	1620	2075	610
Stage 1	-	-	-	-	-	-	835	835	-	1215	1215	-
Stage 2	-	-	-	-	-	-	605	1220	-	405	860	-
Critical Hdwy	4.76	-	-	4.14	-	-	7.54	6.54	6.94	7.54	6.54	6.94
Critical Hdwy Stg 1	-	-	-	-	-	-	6.54	5.54	-	6.54	5.54	-
Critical Hdwy Stg 2	-	-	-	-	-	-	6.54	5.54	-	6.54	5.54	-
Follow-up Hdwy	2.53	-	-	2.22	-	-	3.52	4.02	3.32	3.52	4.02	3.32
Pot Cap-1 Maneuver	422	-	-	777	-	-	93	55	573	68	53	437
Stage 1	-	-	-	-	-	-	328	381	-	192	252	-
Stage 2	-	-	-	-	-	-	451	251	-	593	371	-
Platoon blocked, %		-	-		-	-						
Mov Cap-1 Maneuver	422	-	-	777	-	-	91	55	573	59	53	437
Mov Cap-2 Maneuver	-	-	-	-	-	-	91	55	-	59	53	-
Stage 1	-	-	-	-	-	-	328	381	-	192	252	-
Stage 2	-	-	-	-	-	-	441	251	-	510	371	-

Approach	EB	WB	NB	SB
HCM Control Delay, s	0	0	12.3	13.4
HCM LOS			B	B

Minor Lane/Major Mvmt	NBLn1	EBL	EBT	EBR	WBL	WBT	WBR	SBLn1
Capacity (veh/h)	573	422	-	-	777	-	-	437
HCM Lane V/C Ratio	0.14	-	-	-	-	-	-	0.023
HCM Control Delay (s)	12.3	0	-	-	0	-	-	13.4
HCM Lane LOS	B	A	-	-	A	-	-	B
HCM 95th %tile Q(veh)	0.5	0	-	-	0	-	-	0.1

Movement	EBL	EBT	EBR	WBL	WBT	WBR	NBL	NBT	NBR	SBL	SBT	SBR
Lane Configurations												
Traffic Volume (veh/h)	0	750	40	0	1080	20	0	0	10	0	0	10
Future Volume (Veh/h)	0	750	40	0	1080	20	0	0	10	0	0	10
Sign Control		Free			Free			Stop			Stop	
Grade		0%			0%			0%			0%	
Peak Hour Factor	1.00	1.00	1.00	1.00	1.00	1.00	1.00	1.00	1.00	1.00	1.00	1.00
Hourly flow rate (vph)	0	750	40	0	1080	20	0	0	10	0	0	10
Pedestrians												
Lane Width (ft)												
Walking Speed (ft/s)												
Percent Blockage												
Right turn flare (veh)												
Median type		None			None							
Median storage veh)												
Upstream signal (ft)												
pX, platoon unblocked												
vC, conflicting volume	1100			790			1320	1870	395	1475	1880	550
vC1, stage 1 conf vol												
vC2, stage 2 conf vol												
vCu, unblocked vol	1100			790			1320	1870	395	1475	1880	550
tC, single (s)	4.7			4.9			7.5	6.5	6.9	7.5	6.5	6.9
tC, 2 stage (s)												
tF (s)	2.5			2.6			3.5	4.0	3.3	3.5	4.0	3.3
p0 queue free %	100			100			100	100	98	100	100	98
cM capacity (veh/h)	486			624			112	71	604	86	70	479

Direction, Lane #	EB 1	EB 2	WB 1	WB 2	NB 1	SB 1
Volume Total	500	290	720	380	10	10
Volume Left	0	0	0	0	0	0
Volume Right	0	40	0	20	10	10
cSH	1700	1700	1700	1700	604	479
Volume to Capacity	0.29	0.17	0.42	0.22	0.02	0.02
Queue Length 95th (ft)	0	0	0	0	1	2
Control Delay (s)	0.0	0.0	0.0	0.0	11.1	12.7
Lane LOS					B	B
Approach Delay (s)	0.0		0.0		11.1	12.7
Approach LOS					B	B

Intersection Summary			
Average Delay	0.1		
Intersection Capacity Utilization	40.5%	ICU Level of Service	A
Analysis Period (min)	15		

Intersection	
Int Delay, s/veh	0.1

Movement	EBL	EBT	EBR	WBL	WBT	WBR	NBL	NBT	NBR	SBL	SBT	SBR
Traffic Vol, veh/h	0	750	40	0	1080	20	0	0	10	0	0	10
Future Vol, veh/h	0	750	40	0	1080	20	0	0	10	0	0	10
Conflicting Peds, #/hr	0	0	0	0	0	0	0	0	0	0	0	0
Sign Control	Free	Free	Free	Free	Free	Free	Stop	Stop	Stop	Stop	Stop	Stop
RT Channelized	-	-	None	-	-	None	-	-	None	-	-	None
Storage Length	-	-	-	-	-	-	-	-	0	-	-	0
Veh in Median Storage, #	-	0	-	-	0	-	-	0	-	-	0	-
Grade, %	-	0	-	-	0	-	-	0	-	-	0	-
Peak Hour Factor	100	100	100	100	100	100	100	100	100	100	100	100
Heavy Vehicles, %	31	31	31	39	39	39	2	2	2	2	2	2
Mvmt Flow	0	750	40	0	1080	20	0	0	10	0	0	10

Major/Minor	Major1			Major2			Minor1			Minor2		
Conflicting Flow All	1100	0	0	790	0	0	1310	1870	395	1465	1880	550
Stage 1	-	-	-	-	-	-	770	770	-	1090	1090	-
Stage 2	-	-	-	-	-	-	540	1100	-	375	790	-
Critical Hdwy	4.72	-	-	4.88	-	-	7.54	6.54	6.94	7.54	6.54	6.94
Critical Hdwy Stg 1	-	-	-	-	-	-	6.54	5.54	-	6.54	5.54	-
Critical Hdwy Stg 2	-	-	-	-	-	-	6.54	5.54	-	6.54	5.54	-
Follow-up Hdwy	2.51	-	-	2.59	-	-	3.52	4.02	3.32	3.52	4.02	3.32
Pot Cap-1 Maneuver	486	-	-	624	-	-	117	71	604	89	70	479
Stage 1	-	-	-	-	-	-	359	408	-	230	289	-
Stage 2	-	-	-	-	-	-	494	286	-	618	400	-
Platoon blocked, %		-	-		-	-						
Mov Cap-1 Maneuver	486	-	-	624	-	-	115	71	604	88	70	479
Mov Cap-2 Maneuver	-	-	-	-	-	-	115	71	-	88	70	-
Stage 1	-	-	-	-	-	-	359	408	-	230	289	-
Stage 2	-	-	-	-	-	-	484	286	-	608	400	-

Approach	EB	WB	NB	SB
HCM Control Delay, s	0	0	11.1	12.7
HCM LOS			B	B

Minor Lane/Major Mvmt	NBLn1	EBL	EBT	EBR	WBL	WBT	WBR	SBLn1
Capacity (veh/h)	604	486	-	-	624	-	-	479
HCM Lane V/C Ratio	0.017	-	-	-	-	-	-	0.021
HCM Control Delay (s)	11.1	0	-	-	0	-	-	12.7
HCM Lane LOS	B	A	-	-	A	-	-	B
HCM 95th %tile Q(veh)	0.1	0	-	-	0	-	-	0.1

Movement	EBL	EBT	EBR	WBL	WBT	WBR	NBL	NBT	NBR	SBL	SBT	SBR
Lane Configurations												
Traffic Volume (veh/h)	0	740	10	0	1040	10	0	0	10	0	0	10
Future Volume (Veh/h)	0	740	10	0	1040	10	0	0	10	0	0	10
Sign Control		Free			Free			Stop			Stop	
Grade		0%			0%			0%			0%	
Peak Hour Factor	1.00	1.00	1.00	1.00	1.00	1.00	1.00	1.00	1.00	1.00	1.00	1.00
Hourly flow rate (vph)	0	740	10	0	1040	10	0	0	10	0	0	10
Pedestrians												
Lane Width (ft)												
Walking Speed (ft/s)												
Percent Blockage												
Right turn flare (veh)												
Median type		None			None							
Median storage veh)												
Upstream signal (ft)												
pX, platoon unblocked												
vC, conflicting volume	1050			750			1275	1795	375	1425	1795	525
vC1, stage 1 conf vol												
vC2, stage 2 conf vol												
vCu, unblocked vol	1050			750			1275	1795	375	1425	1795	525
tC, single (s)	4.1			4.1			7.5	6.5	6.9	7.5	6.5	6.9
tC, 2 stage (s)												
tF (s)	2.2			2.2			3.5	4.0	3.3	3.5	4.0	3.3
p0 queue free %	100			100			100	100	98	100	100	98
cM capacity (veh/h)	659			855			121	80	623	94	80	497

Direction, Lane #	EB 1	EB 2	WB 1	WB 2	NB 1	SB 1
Volume Total	493	257	693	357	10	10
Volume Left	0	0	0	0	0	0
Volume Right	0	10	0	10	10	10
cSH	1700	1700	1700	1700	623	497
Volume to Capacity	0.29	0.15	0.41	0.21	0.02	0.02
Queue Length 95th (ft)	0	0	0	0	1	2
Control Delay (s)	0.0	0.0	0.0	0.0	10.9	12.4
Lane LOS					B	B
Approach Delay (s)	0.0		0.0		10.9	12.4
Approach LOS					B	B

Intersection Summary			
Average Delay	0.1		
Intersection Capacity Utilization	39.1%	ICU Level of Service	A
Analysis Period (min)	15		

Intersection	
Int Delay, s/veh	0.1

Movement	EBL	EBT	EBR	WBL	WBT	WBR	NBL	NBT	NBR	SBL	SBT	SBR
Traffic Vol, veh/h	0	740	10	0	1040	10	0	0	10	0	0	10
Future Vol, veh/h	0	740	10	0	1040	10	0	0	10	0	0	10
Conflicting Peds, #/hr	0	0	0	0	0	0	0	0	0	0	0	0
Sign Control	Free	Free	Free	Free	Free	Free	Stop	Stop	Stop	Stop	Stop	Stop
RT Channelized	-	-	None	-	-	None	-	-	None	-	-	None
Storage Length	-	-	-	-	-	-	-	-	0	-	-	0
Veh in Median Storage, #	-	0	-	-	0	-	-	0	-	-	0	-
Grade, %	-	0	-	-	0	-	-	0	-	-	0	-
Peak Hour Factor	100	100	100	100	100	100	100	100	100	100	100	100
Heavy Vehicles, %	2	2	2	2	2	2	2	2	2	2	2	2
Mvmt Flow	0	740	10	0	1040	10	0	0	10	0	0	10

Major/Minor	Major1			Major2			Minor1			Minor2		
Conflicting Flow All	1050	0	0	750	0	0	1265	1795	375	1415	1795	525
Stage 1	-	-	-	-	-	-	745	745	-	1045	1045	-
Stage 2	-	-	-	-	-	-	520	1050	-	370	750	-
Critical Hdwy	4.14	-	-	4.14	-	-	7.54	6.54	6.94	7.54	6.54	6.94
Critical Hdwy Stg 1	-	-	-	-	-	-	6.54	5.54	-	6.54	5.54	-
Critical Hdwy Stg 2	-	-	-	-	-	-	6.54	5.54	-	6.54	5.54	-
Follow-up Hdwy	2.22	-	-	2.22	-	-	3.52	4.02	3.32	3.52	4.02	3.32
Pot Cap-1 Maneuver	659	-	-	855	-	-	126	80	623	97	80	497
Stage 1	-	-	-	-	-	-	372	419	-	245	304	-
Stage 2	-	-	-	-	-	-	507	302	-	622	417	-
Platoon blocked, %		-	-		-	-						
Mov Cap-1 Maneuver	659	-	-	855	-	-	123	80	623	95	80	497
Mov Cap-2 Maneuver	-	-	-	-	-	-	123	80	-	95	80	-
Stage 1	-	-	-	-	-	-	372	419	-	245	304	-
Stage 2	-	-	-	-	-	-	497	302	-	612	417	-

Approach	EB	WB	NB	SB
HCM Control Delay, s	0	0	10.9	12.4
HCM LOS			B	B

Minor Lane/Major Mvmt	NBLn1	EBL	EBT	EBR	WBL	WBT	WBR	SBLn1
Capacity (veh/h)	623	659	-	-	855	-	-	497
HCM Lane V/C Ratio	0.016	-	-	-	-	-	-	0.02
HCM Control Delay (s)	10.9	0	-	-	0	-	-	12.4
HCM Lane LOS	B	A	-	-	A	-	-	B
HCM 95th %tile Q(veh)	0	0	-	-	0	-	-	0.1

Movement	EBL	EBT	EBR	WBL	WBT	WBR	NBL	NBT	NBR	SBL	SBT	SBR
Lane Configurations												
Traffic Volume (veh/h)	0	730	0	0	1040	20	0	0	0	0	0	10
Future Volume (Veh/h)	0	730	0	0	1040	20	0	0	0	0	0	10
Sign Control		Free			Free			Stop			Stop	
Grade		0%			0%			0%			0%	
Peak Hour Factor	1.00	1.00	1.00	1.00	1.00	1.00	1.00	1.00	1.00	1.00	1.00	1.00
Hourly flow rate (vph)	0	730	0	0	1040	20	0	0	0	0	0	10
Pedestrians												
Lane Width (ft)												
Walking Speed (ft/s)												
Percent Blockage												
Right turn flare (veh)												
Median type		None			None							
Median storage veh)												
Upstream signal (ft)												
pX, platoon unblocked												
vC, conflicting volume	1060			730			1260	1790	365	1415	1780	530
vC1, stage 1 conf vol												
vC2, stage 2 conf vol												
vCu, unblocked vol	1060			730			1260	1790	365	1415	1780	530
tC, single (s)	4.1			4.1			7.5	6.5	6.9	7.5	6.5	6.9
tC, 2 stage (s)												
tF (s)	2.2			2.2			3.5	4.0	3.3	3.5	4.0	3.3
p0 queue free %	100			100			100	100	100	100	100	98
cM capacity (veh/h)	653			870			124	80	632	97	81	493

Direction, Lane #	EB 1	EB 2	WB 1	WB 2	NB 1	SB 1
Volume Total	487	243	693	367	0	10
Volume Left	0	0	0	0	0	0
Volume Right	0	0	0	20	0	10
cSH	1700	1700	1700	1700	1700	493
Volume to Capacity	0.29	0.14	0.41	0.22	0.00	0.02
Queue Length 95th (ft)	0	0	0	0	0	2
Control Delay (s)	0.0	0.0	0.0	0.0	0.0	12.4
Lane LOS					A	B
Approach Delay (s)	0.0		0.0		0.0	12.4
Approach LOS					A	B

Intersection Summary			
Average Delay	0.1		
Intersection Capacity Utilization	39.4%	ICU Level of Service	A
Analysis Period (min)	15		

Intersection	
Int Delay, s/veh	0.1

Movement	EBL	EBT	EBR	WBL	WBT	WBR	NBL	NBT	NBR	SBL	SBT	SBR
Traffic Vol, veh/h	0	730	0	0	1040	20	0	0	0	0	0	10
Future Vol, veh/h	0	730	0	0	1040	20	0	0	0	0	0	10
Conflicting Peds, #/hr	0	0	0	0	0	0	0	0	0	0	0	0
Sign Control	Free	Free	Free	Free	Free	Free	Stop	Stop	Stop	Stop	Stop	Stop
RT Channelized	-	-	None	-	-	None	-	-	None	-	-	None
Storage Length	-	-	-	-	-	-	-	-	0	-	-	0
Veh in Median Storage, #	-	0	-	-	0	-	-	0	-	-	0	-
Grade, %	-	0	-	-	0	-	-	0	-	-	0	-
Peak Hour Factor	100	100	100	100	100	100	100	100	100	100	100	100
Heavy Vehicles, %	2	2	2	2	2	2	2	2	2	2	2	2
Mvmt Flow	0	730	0	0	1040	20	0	0	0	0	0	10

Major/Minor	Major1			Major2			Minor1			Minor2		
Conflicting Flow All	1060	0	0	730	0	0	1250	1790	365	1415	1780	530
Stage 1	-	-	-	-	-	-	730	730	-	1050	1050	-
Stage 2	-	-	-	-	-	-	520	1060	-	365	730	-
Critical Hdwy	4.14	-	-	4.14	-	-	7.54	6.54	6.94	7.54	6.54	6.94
Critical Hdwy Stg 1	-	-	-	-	-	-	6.54	5.54	-	6.54	5.54	-
Critical Hdwy Stg 2	-	-	-	-	-	-	6.54	5.54	-	6.54	5.54	-
Follow-up Hdwy	2.22	-	-	2.22	-	-	3.52	4.02	3.32	3.52	4.02	3.32
Pot Cap-1 Maneuver	653	-	-	870	-	-	129	80	632	97	81	493
Stage 1	-	-	-	-	-	-	380	426	-	243	302	-
Stage 2	-	-	-	-	-	-	507	299	-	627	426	-
Platoon blocked, %		-	-		-	-						
Mov Cap-1 Maneuver	653	-	-	870	-	-	126	80	632	97	81	493
Mov Cap-2 Maneuver	-	-	-	-	-	-	126	80	-	97	81	-
Stage 1	-	-	-	-	-	-	380	426	-	243	302	-
Stage 2	-	-	-	-	-	-	497	299	-	627	426	-

Approach	EB	WB	NB	SB
HCM Control Delay, s	0	0	0	12.5
HCM LOS			A	B

Minor Lane/Major Mvmt	NBLn1	EBL	EBT	EBR	WBL	WBT	WBR	SBLn1
Capacity (veh/h)	-	653	-	-	870	-	-	493
HCM Lane V/C Ratio	-	-	-	-	-	-	-	0.02
HCM Control Delay (s)	0	0	-	-	0	-	-	12.5
HCM Lane LOS	A	A	-	-	A	-	-	B
HCM 95th %tile Q(veh)	-	0	-	-	0	-	-	0.1

Movement	EBL	EBT	EBR	WBL	WBT	WBR	NBL	NBT	NBR	SBL	SBT	SBR
Lane Configurations												
Traffic Volume (veh/h)	0	730	10	0	1060	10	0	0	10	0	0	10
Future Volume (Veh/h)	0	730	10	0	1060	10	0	0	10	0	0	10
Sign Control		Free			Free			Stop			Stop	
Grade		0%			0%			0%			0%	
Peak Hour Factor	1.00	1.00	1.00	1.00	1.00	1.00	1.00	1.00	1.00	1.00	1.00	1.00
Hourly flow rate (vph)	0	730	10	0	1060	10	0	0	10	0	0	10
Pedestrians												
Lane Width (ft)												
Walking Speed (ft/s)												
Percent Blockage												
Right turn flare (veh)												
Median type		None			None							
Median storage veh)												
Upstream signal (ft)												
pX, platoon unblocked												
vC, conflicting volume	1070			740			1275	1805	370	1440	1805	535
vC1, stage 1 conf vol												
vC2, stage 2 conf vol												
vCu, unblocked vol	1070			740			1275	1805	370	1440	1805	535
tC, single (s)	4.1			4.1			7.5	6.5	6.9	7.5	6.5	6.9
tC, 2 stage (s)												
tF (s)	2.2			2.2			3.5	4.0	3.3	3.5	4.0	3.3
p0 queue free %	100			100			100	100	98	100	100	98
cM capacity (veh/h)	647			862			121	78	627	92	78	490

Direction, Lane #	EB 1	EB 2	WB 1	WB 2	NB 1	SB 1
Volume Total	487	253	707	363	10	10
Volume Left	0	0	0	0	0	0
Volume Right	0	10	0	10	10	10
cSH	1700	1700	1700	1700	627	490
Volume to Capacity	0.29	0.15	0.42	0.21	0.02	0.02
Queue Length 95th (ft)	0	0	0	0	1	2
Control Delay (s)	0.0	0.0	0.0	0.0	10.8	12.5
Lane LOS					B	B
Approach Delay (s)	0.0		0.0		10.8	12.5
Approach LOS					B	B

Intersection Summary			
Average Delay	0.1		
Intersection Capacity Utilization	39.6%	ICU Level of Service	A
Analysis Period (min)	15		

Intersection	
Int Delay, s/veh	0.1

Movement	EBL	EBT	EBR	WBL	WBT	WBR	NBL	NBT	NBR	SBL	SBT	SBR
Traffic Vol, veh/h	0	730	10	0	1060	10	0	0	10	0	0	10
Future Vol, veh/h	0	730	10	0	1060	10	0	0	10	0	0	10
Conflicting Peds, #/hr	0	0	0	0	0	0	0	0	0	0	0	0
Sign Control	Free	Free	Free	Free	Free	Free	Stop	Stop	Stop	Stop	Stop	Stop
RT Channelized	-	-	None	-	-	None	-	-	None	-	-	None
Storage Length	-	-	-	-	-	-	-	-	0	-	-	0
Veh in Median Storage, #	-	0	-	-	0	-	-	0	-	-	0	-
Grade, %	-	0	-	-	0	-	-	0	-	-	0	-
Peak Hour Factor	100	100	100	100	100	100	100	100	100	100	100	100
Heavy Vehicles, %	2	2	2	2	2	2	2	2	2	2	2	2
Mvmt Flow	0	730	10	0	1060	10	0	0	10	0	0	10

Major/Minor	Major1			Major2			Minor1			Minor2		
Conflicting Flow All	1070	0	0	740	0	0	1265	1805	370	1430	1805	535
Stage 1	-	-	-	-	-	-	735	735	-	1065	1065	-
Stage 2	-	-	-	-	-	-	530	1070	-	365	740	-
Critical Hdwy	4.14	-	-	4.14	-	-	7.54	6.54	6.94	7.54	6.54	6.94
Critical Hdwy Stg 1	-	-	-	-	-	-	6.54	5.54	-	6.54	5.54	-
Critical Hdwy Stg 2	-	-	-	-	-	-	6.54	5.54	-	6.54	5.54	-
Follow-up Hdwy	2.22	-	-	2.22	-	-	3.52	4.02	3.32	3.52	4.02	3.32
Pot Cap-1 Maneuver	647	-	-	862	-	-	126	78	627	95	78	490
Stage 1	-	-	-	-	-	-	377	424	-	238	297	-
Stage 2	-	-	-	-	-	-	500	296	-	627	421	-
Platoon blocked, %		-	-		-	-						
Mov Cap-1 Maneuver	647	-	-	862	-	-	123	78	627	93	78	490
Mov Cap-2 Maneuver	-	-	-	-	-	-	123	78	-	93	78	-
Stage 1	-	-	-	-	-	-	377	424	-	238	297	-
Stage 2	-	-	-	-	-	-	490	296	-	617	421	-

Approach	EB	WB	NB	SB
HCM Control Delay, s	0	0	10.8	12.5
HCM LOS			B	B

Minor Lane/Major Mvmt	NBLn1	EBL	EBT	EBR	WBL	WBT	WBR	SBLn1
Capacity (veh/h)	627	647	-	-	862	-	-	490
HCM Lane V/C Ratio	0.016	-	-	-	-	-	-	0.02
HCM Control Delay (s)	10.8	0	-	-	0	-	-	12.5
HCM Lane LOS	B	A	-	-	A	-	-	B
HCM 95th %tile Q(veh)	0	0	-	-	0	-	-	0.1

Movement	EBL	EBT	EBR	WBL	WBT	WBR	NBL	NBT	NBR	SBL	SBT	SBR
Lane Configurations												
Traffic Volume (veh/h)	0	730	10	0	1050	30	0	0	10	0	0	10
Future Volume (Veh/h)	0	730	10	0	1050	30	0	0	10	0	0	10
Sign Control		Free			Free			Stop			Stop	
Grade		0%			0%			0%			0%	
Peak Hour Factor	1.00	1.00	1.00	1.00	1.00	1.00	1.00	1.00	1.00	1.00	1.00	1.00
Hourly flow rate (vph)	0	730	10	0	1050	30	0	0	10	0	0	10
Pedestrians												
Lane Width (ft)												
Walking Speed (ft/s)												
Percent Blockage												
Right turn flare (veh)												
Median type		None			None							
Median storage veh)												
Upstream signal (ft)												
pX, platoon unblocked												
vC, conflicting volume	1080			740			1270	1815	370	1440	1805	540
vC1, stage 1 conf vol												
vC2, stage 2 conf vol												
vCu, unblocked vol	1080			740			1270	1815	370	1440	1805	540
tC, single (s)	4.7			4.8			7.5	6.5	6.9	7.5	6.5	6.9
tC, 2 stage (s)												
tF (s)	2.5			2.6			3.5	4.0	3.3	3.5	4.0	3.3
p0 queue free %	100			100			100	100	98	100	100	98
cM capacity (veh/h)	504			671			122	77	627	92	78	486

Direction, Lane #	EB 1	EB 2	WB 1	WB 2	NB 1	SB 1
Volume Total	487	253	700	380	10	10
Volume Left	0	0	0	0	0	0
Volume Right	0	10	0	30	10	10
cSH	1700	1700	1700	1700	627	486
Volume to Capacity	0.29	0.15	0.41	0.22	0.02	0.02
Queue Length 95th (ft)	0	0	0	0	1	2
Control Delay (s)	0.0	0.0	0.0	0.0	10.8	12.6
Lane LOS					B	B
Approach Delay (s)	0.0		0.0		10.8	12.6
Approach LOS					B	B

Intersection Summary			
Average Delay	0.1		
Intersection Capacity Utilization	40.0%	ICU Level of Service	A
Analysis Period (min)	15		

Intersection	
Int Delay, s/veh	0.1

Movement	EBL	EBT	EBR	WBL	WBT	WBR	NBL	NBT	NBR	SBL	SBT	SBR
Traffic Vol, veh/h	0	730	10	0	1050	30	0	0	10	0	0	10
Future Vol, veh/h	0	730	10	0	1050	30	0	0	10	0	0	10
Conflicting Peds, #/hr	0	0	0	0	0	0	0	0	0	0	0	0
Sign Control	Free	Free	Free	Free	Free	Free	Stop	Stop	Stop	Stop	Stop	Stop
RT Channelized	-	-	None	-	-	None	-	-	None	-	-	None
Storage Length	-	-	-	-	-	-	-	-	0	-	-	0
Veh in Median Storage, #	-	0	-	-	0	-	-	0	-	-	0	-
Grade, %	-	0	-	-	0	-	-	0	-	-	0	-
Peak Hour Factor	100	100	100	100	100	100	100	100	100	100	100	100
Heavy Vehicles, %	29	29	29	36	36	36	2	2	2	2	2	2
Mvmt Flow	0	730	10	0	1050	30	0	0	10	0	0	10

Major/Minor	Major1			Major2			Minor1			Minor2		
Conflicting Flow All	1080	0	0	740	0	0	1260	1815	370	1430	1805	540
Stage 1	-	-	-	-	-	-	735	735	-	1065	1065	-
Stage 2	-	-	-	-	-	-	525	1080	-	365	740	-
Critical Hdwy	4.68	-	-	4.82	-	-	7.54	6.54	6.94	7.54	6.54	6.94
Critical Hdwy Stg 1	-	-	-	-	-	-	6.54	5.54	-	6.54	5.54	-
Critical Hdwy Stg 2	-	-	-	-	-	-	6.54	5.54	-	6.54	5.54	-
Follow-up Hdwy	2.49	-	-	2.56	-	-	3.52	4.02	3.32	3.52	4.02	3.32
Pot Cap-1 Maneuver	504	-	-	671	-	-	127	77	627	95	78	486
Stage 1	-	-	-	-	-	-	377	424	-	238	297	-
Stage 2	-	-	-	-	-	-	504	293	-	627	421	-
Platoon blocked, %		-	-		-	-						
Mov Cap-1 Maneuver	504	-	-	671	-	-	124	77	627	93	78	486
Mov Cap-2 Maneuver	-	-	-	-	-	-	124	77	-	93	78	-
Stage 1	-	-	-	-	-	-	377	424	-	238	297	-
Stage 2	-	-	-	-	-	-	494	293	-	617	421	-

Approach	EB	WB	NB	SB
HCM Control Delay, s	0	0	10.8	12.6
HCM LOS			B	B

Minor Lane/Major Mvmt	NBLn1	EBL	EBT	EBR	WBL	WBT	WBR	SBLn1
Capacity (veh/h)	627	504	-	-	671	-	-	486
HCM Lane V/C Ratio	0.016	-	-	-	-	-	-	0.021
HCM Control Delay (s)	10.8	0	-	-	0	-	-	12.6
HCM Lane LOS	B	A	-	-	A	-	-	B
HCM 95th %tile Q(veh)	0	0	-	-	0	-	-	0.1

Movement	EBL	EBT	EBR	WBL	WBT	WBR	NBL	NBT	NBR	SBL	SBT	SBR
Lane Configurations												
Traffic Volume (veh/h)	0	650	80	0	980	40	0	0	10	0	0	20
Future Volume (Veh/h)	0	650	80	0	980	40	0	0	10	0	0	20
Sign Control		Free			Free			Stop			Stop	
Grade		0%			0%			0%			0%	
Peak Hour Factor	1.00	1.00	1.00	1.00	1.00	1.00	1.00	1.00	1.00	1.00	1.00	1.00
Hourly flow rate (vph)	0	650	80	0	980	40	0	0	10	0	0	20
Pedestrians												
Lane Width (ft)												
Walking Speed (ft/s)												
Percent Blockage												
Right turn flare (veh)												
Median type		None			None							
Median storage veh)												
Upstream signal (ft)												
pX, platoon unblocked												
vC, conflicting volume	1020			730			1200	1710	365	1335	1730	510
vC1, stage 1 conf vol												
vC2, stage 2 conf vol												
vCu, unblocked vol	1020			730			1200	1710	365	1335	1730	510
tC, single (s)	4.6			4.8			7.5	6.5	6.9	7.5	6.5	6.9
tC, 2 stage (s)												
tF (s)	2.5			2.6			3.5	4.0	3.3	3.5	4.0	3.3
p0 queue free %	100			100			100	100	98	100	100	96
cM capacity (veh/h)	549			678			135	90	632	110	87	509

Direction, Lane #	EB 1	EB 2	WB 1	WB 2	NB 1	SB 1
Volume Total	433	297	653	367	10	20
Volume Left	0	0	0	0	0	0
Volume Right	0	80	0	40	10	20
cSH	1700	1700	1700	1700	632	509
Volume to Capacity	0.25	0.17	0.38	0.22	0.02	0.04
Queue Length 95th (ft)	0	0	0	0	1	3
Control Delay (s)	0.0	0.0	0.0	0.0	10.8	12.4
Lane LOS					B	B
Approach Delay (s)	0.0		0.0		10.8	12.4
Approach LOS					B	B

Intersection Summary			
Average Delay	0.2		
Intersection Capacity Utilization	38.4%	ICU Level of Service	A
Analysis Period (min)	15		

Intersection	
Int Delay, s/veh	0.2

Movement	EBL	EBT	EBR	WBL	WBT	WBR	NBL	NBT	NBR	SBL	SBT	SBR
Traffic Vol, veh/h	0	650	80	0	980	40	0	0	10	0	0	20
Future Vol, veh/h	0	650	80	0	980	40	0	0	10	0	0	20
Conflicting Peds, #/hr	0	0	0	0	0	0	0	0	0	0	0	0
Sign Control	Free	Free	Free	Free	Free	Free	Stop	Stop	Stop	Stop	Stop	Stop
RT Channelized	-	-	None	-	-	None	-	-	None	-	-	None
Storage Length	-	-	-	-	-	-	-	-	0	-	-	0
Veh in Median Storage, #	-	0	-	-	0	-	-	0	-	-	0	-
Grade, %	-	0	-	-	0	-	-	0	-	-	0	-
Peak Hour Factor	100	100	100	100	100	100	100	100	100	100	100	100
Heavy Vehicles, %	26	26	26	36	36	36	2	2	2	2	2	2
Mvmt Flow	0	650	80	0	980	40	0	0	10	0	0	20

Major/Minor	Major1			Major2			Minor1			Minor2		
Conflicting Flow All	1020	0	0	730	0	0	1180	1710	365	1325	1730	510
Stage 1	-	-	-	-	-	-	690	690	-	1000	1000	-
Stage 2	-	-	-	-	-	-	490	1020	-	325	730	-
Critical Hdwy	4.62	-	-	4.82	-	-	7.54	6.54	6.94	7.54	6.54	6.94
Critical Hdwy Stg 1	-	-	-	-	-	-	6.54	5.54	-	6.54	5.54	-
Critical Hdwy Stg 2	-	-	-	-	-	-	6.54	5.54	-	6.54	5.54	-
Follow-up Hdwy	2.46	-	-	2.56	-	-	3.52	4.02	3.32	3.52	4.02	3.32
Pot Cap-1 Maneuver	549	-	-	678	-	-	146	90	632	114	87	509
Stage 1	-	-	-	-	-	-	401	444	-	261	319	-
Stage 2	-	-	-	-	-	-	529	312	-	661	426	-
Platoon blocked, %		-	-		-	-						
Mov Cap-1 Maneuver	549	-	-	678	-	-	140	90	632	112	87	509
Mov Cap-2 Maneuver	-	-	-	-	-	-	140	90	-	112	87	-
Stage 1	-	-	-	-	-	-	401	444	-	261	319	-
Stage 2	-	-	-	-	-	-	508	312	-	651	426	-

Approach	EB	WB	NB	SB
HCM Control Delay, s	0	0	10.8	12.4
HCM LOS			B	B

Minor Lane/Major Mvmt	NBLn1	EBL	EBT	EBR	WBL	WBT	WBR	SBLn1
Capacity (veh/h)	632	549	-	-	678	-	-	509
HCM Lane V/C Ratio	0.016	-	-	-	-	-	-	0.039
HCM Control Delay (s)	10.8	0	-	-	0	-	-	12.4
HCM Lane LOS	B	A	-	-	A	-	-	B
HCM 95th %tile Q(veh)	0	0	-	-	0	-	-	0.1

Movement	EBL	EBT	EBR	WBL	WBT	WBR	NBL	NBT	NBR	SBL	SBT	SBR
Lane Configurations												
Traffic Volume (veh/h)	0	650	10	0	1010	20	0	0	10	0	0	10
Future Volume (Veh/h)	0	650	10	0	1010	20	0	0	10	0	0	10
Sign Control		Free			Free			Stop			Stop	
Grade		0%			0%			0%			0%	
Peak Hour Factor	1.00	1.00	1.00	1.00	1.00	1.00	1.00	1.00	1.00	1.00	1.00	1.00
Hourly flow rate (vph)	0	650	10	0	1010	20	0	0	10	0	0	10
Pedestrians												
Lane Width (ft)												
Walking Speed (ft/s)												
Percent Blockage												
Right turn flare (veh)												
Median type		None			None							
Median storage veh)												
Upstream signal (ft)												
pX, platoon unblocked												
vC, conflicting volume	1030			660			1170	1685	330	1355	1680	515
vC1, stage 1 conf vol												
vC2, stage 2 conf vol												
vCu, unblocked vol	1030			660			1170	1685	330	1355	1680	515
tC, single (s)	4.6			4.8			7.5	6.5	6.9	7.5	6.5	6.9
tC, 2 stage (s)												
tF (s)	2.5			2.6			3.5	4.0	3.3	3.5	4.0	3.3
p0 queue free %	100			100			100	100	98	100	100	98
cM capacity (veh/h)	544			728			145	93	666	106	94	505

Direction, Lane #	EB 1	EB 2	WB 1	WB 2	NB 1	SB 1
Volume Total	433	227	673	357	10	10
Volume Left	0	0	0	0	0	0
Volume Right	0	10	0	20	10	10
cSH	1700	1700	1700	1700	666	505
Volume to Capacity	0.25	0.13	0.40	0.21	0.02	0.02
Queue Length 95th (ft)	0	0	0	0	1	2
Control Delay (s)	0.0	0.0	0.0	0.0	10.5	12.3
Lane LOS					B	B
Approach Delay (s)	0.0		0.0		10.5	12.3
Approach LOS					B	B

Intersection Summary			
Average Delay	0.1		
Intersection Capacity Utilization	38.6%	ICU Level of Service	A
Analysis Period (min)	15		

Intersection	
Int Delay, s/veh	0.1

Movement	EBL	EBT	EBR	WBL	WBT	WBR	NBL	NBT	NBR	SBL	SBT	SBR
Traffic Vol, veh/h	0	650	10	0	1010	20	0	0	10	0	0	10
Future Vol, veh/h	0	650	10	0	1010	20	0	0	10	0	0	10
Conflicting Peds, #/hr	0	0	0	0	0	0	0	0	0	0	0	0
Sign Control	Free	Free	Free	Free	Free	Free	Stop	Stop	Stop	Stop	Stop	Stop
RT Channelized	-	-	None	-	-	None	-	-	None	-	-	None
Storage Length	-	-	-	-	-	-	-	-	0	-	-	0
Veh in Median Storage, #	-	0	-	-	0	-	-	0	-	-	0	-
Grade, %	-	0	-	-	0	-	-	0	-	-	0	-
Peak Hour Factor	100	100	100	100	100	100	100	100	100	100	100	100
Heavy Vehicles, %	26	26	26	36	36	36	2	2	2	2	2	2
Mvmt Flow	0	650	10	0	1010	20	0	0	10	0	0	10

Major/Minor	Major1			Major2			Minor1			Minor2		
Conflicting Flow All	1030	0	0	660	0	0	1160	1685	330	1345	1680	515
Stage 1	-	-	-	-	-	-	655	655	-	1020	1020	-
Stage 2	-	-	-	-	-	-	505	1030	-	325	660	-
Critical Hdwy	4.62	-	-	4.82	-	-	7.54	6.54	6.94	7.54	6.54	6.94
Critical Hdwy Stg 1	-	-	-	-	-	-	6.54	5.54	-	6.54	5.54	-
Critical Hdwy Stg 2	-	-	-	-	-	-	6.54	5.54	-	6.54	5.54	-
Follow-up Hdwy	2.46	-	-	2.56	-	-	3.52	4.02	3.32	3.52	4.02	3.32
Pot Cap-1 Maneuver	544	-	-	728	-	-	151	93	666	110	94	505
Stage 1	-	-	-	-	-	-	421	461	-	253	312	-
Stage 2	-	-	-	-	-	-	518	309	-	661	458	-
Platoon blocked, %		-	-		-	-						
Mov Cap-1 Maneuver	544	-	-	728	-	-	148	93	666	108	94	505
Mov Cap-2 Maneuver	-	-	-	-	-	-	148	93	-	108	94	-
Stage 1	-	-	-	-	-	-	421	461	-	253	312	-
Stage 2	-	-	-	-	-	-	508	309	-	651	458	-

Approach	EB	WB	NB	SB
HCM Control Delay, s	0	0	10.5	12.3
HCM LOS			B	B

Minor Lane/Major Mvmt	NBLn1	EBL	EBT	EBR	WBL	WBT	WBR	SBLn1
Capacity (veh/h)	666	544	-	-	728	-	-	505
HCM Lane V/C Ratio	0.015	-	-	-	-	-	-	0.02
HCM Control Delay (s)	10.5	0	-	-	0	-	-	12.3
HCM Lane LOS	B	A	-	-	A	-	-	B
HCM 95th %tile Q(veh)	0	0	-	-	0	-	-	0.1

Movement	EBL	EBT	EBR	WBL	WBT	WBR	NBL	NBT	NBR	SBL	SBT	SBR
Lane Configurations												
Traffic Volume (veh/h)	0	640	10	0	900	10	0	0	10	0	0	10
Future Volume (Veh/h)	0	640	10	0	900	10	0	0	10	0	0	10
Sign Control		Free			Free			Stop			Stop	
Grade		0%			0%			0%			0%	
Peak Hour Factor	1.00	1.00	1.00	1.00	1.00	1.00	1.00	1.00	1.00	1.00	1.00	1.00
Hourly flow rate (vph)	0	640	10	0	900	10	0	0	10	0	0	10
Pedestrians												
Lane Width (ft)												
Walking Speed (ft/s)												
Percent Blockage												
Right turn flare (veh)												
Median type		None			None							
Median storage veh)												
Upstream signal (ft)												
pX, platoon unblocked												
vC, conflicting volume	910			650			1105	1555	325	1235	1555	455
vC1, stage 1 conf vol												
vC2, stage 2 conf vol												
vCu, unblocked vol	910			650			1105	1555	325	1235	1555	455
tC, single (s)	4.1			4.1			7.5	6.5	6.9	7.5	6.5	6.9
tC, 2 stage (s)												
tF (s)	2.2			2.2			3.5	4.0	3.3	3.5	4.0	3.3
p0 queue free %	100			100			100	100	99	100	100	98
cM capacity (veh/h)	744			932			162	112	671	131	112	552

Direction, Lane #	EB 1	EB 2	WB 1	WB 2	NB 1	SB 1
Volume Total	427	223	600	310	10	10
Volume Left	0	0	0	0	0	0
Volume Right	0	10	0	10	10	10
cSH	1700	1700	1700	1700	671	552
Volume to Capacity	0.25	0.13	0.35	0.18	0.01	0.02
Queue Length 95th (ft)	0	0	0	0	1	1
Control Delay (s)	0.0	0.0	0.0	0.0	10.4	11.6
Lane LOS					B	B
Approach Delay (s)	0.0		0.0		10.4	11.6
Approach LOS					B	B

Intersection Summary			
Average Delay	0.1		
Intersection Capacity Utilization	35.2%	ICU Level of Service	A
Analysis Period (min)	15		

Intersection	
Int Delay, s/veh	0.1

Movement	EBL	EBT	EBR	WBL	WBT	WBR	NBL	NBT	NBR	SBL	SBT	SBR
Traffic Vol, veh/h	0	640	10	0	900	10	0	0	10	0	0	10
Future Vol, veh/h	0	640	10	0	900	10	0	0	10	0	0	10
Conflicting Peds, #/hr	0	0	0	0	0	0	0	0	0	0	0	0
Sign Control	Free	Free	Free	Free	Free	Free	Stop	Stop	Stop	Stop	Stop	Stop
RT Channelized	-	-	None	-	-	None	-	-	None	-	-	None
Storage Length	-	-	-	-	-	-	-	-	0	-	-	0
Veh in Median Storage, #	-	0	-	-	0	-	-	0	-	-	0	-
Grade, %	-	0	-	-	0	-	-	0	-	-	0	-
Peak Hour Factor	100	100	100	100	100	100	100	100	100	100	100	100
Heavy Vehicles, %	2	2	2	2	2	2	2	2	2	2	2	2
Mvmt Flow	0	640	10	0	900	10	0	0	10	0	0	10

Major/Minor	Major1			Major2			Minor1			Minor2		
Conflicting Flow All	910	0	0	650	0	0	1095	1555	325	1225	1555	455
Stage 1	-	-	-	-	-	-	645	645	-	905	905	-
Stage 2	-	-	-	-	-	-	450	910	-	320	650	-
Critical Hdwy	4.14	-	-	4.14	-	-	7.54	6.54	6.94	7.54	6.54	6.94
Critical Hdwy Stg 1	-	-	-	-	-	-	6.54	5.54	-	6.54	5.54	-
Critical Hdwy Stg 2	-	-	-	-	-	-	6.54	5.54	-	6.54	5.54	-
Follow-up Hdwy	2.22	-	-	2.22	-	-	3.52	4.02	3.32	3.52	4.02	3.32
Pot Cap-1 Maneuver	744	-	-	932	-	-	168	112	671	135	112	552
Stage 1	-	-	-	-	-	-	427	466	-	298	353	-
Stage 2	-	-	-	-	-	-	558	352	-	666	463	-
Platoon blocked, %		-	-		-	-						
Mov Cap-1 Maneuver	744	-	-	932	-	-	165	112	671	133	112	552
Mov Cap-2 Maneuver	-	-	-	-	-	-	165	112	-	133	112	-
Stage 1	-	-	-	-	-	-	427	466	-	298	353	-
Stage 2	-	-	-	-	-	-	548	352	-	656	463	-

Approach	EB	WB	NB	SB
HCM Control Delay, s	0	0	10.4	11.6
HCM LOS			B	B

Minor Lane/Major Mvmt	NBLn1	EBL	EBT	EBR	WBL	WBT	WBR	SBLn1
Capacity (veh/h)	671	744	-	-	932	-	-	552
HCM Lane V/C Ratio	0.015	-	-	-	-	-	-	0.018
HCM Control Delay (s)	10.4	0	-	-	0	-	-	11.6
HCM Lane LOS	B	A	-	-	A	-	-	B
HCM 95th %tile Q(veh)	0	0	-	-	0	-	-	0.1

Movement	EBL	EBT	EBR	WBL	WBT	WBR	NBL	NBT	NBR	SBL	SBT	SBR
Lane Configurations												
Traffic Volume (veh/h)	0	640	10	0	900	10	0	0	10	0	0	10
Future Volume (Veh/h)	0	640	10	0	900	10	0	0	10	0	0	10
Sign Control		Free			Free			Stop			Stop	
Grade		0%			0%			0%			0%	
Peak Hour Factor	1.00	1.00	1.00	1.00	1.00	1.00	1.00	1.00	1.00	1.00	1.00	1.00
Hourly flow rate (vph)	0	640	10	0	900	10	0	0	10	0	0	10
Pedestrians												
Lane Width (ft)												
Walking Speed (ft/s)												
Percent Blockage												
Right turn flare (veh)												
Median type		None			None							
Median storage veh)												
Upstream signal (ft)												
pX, platoon unblocked												
vC, conflicting volume	910			650			1105	1555	325	1235	1555	455
vC1, stage 1 conf vol												
vC2, stage 2 conf vol												
vCu, unblocked vol	910			650			1105	1555	325	1235	1555	455
tC, single (s)	4.6			4.8			7.5	6.5	6.9	7.5	6.5	6.9
tC, 2 stage (s)												
tF (s)	2.5			2.6			3.5	4.0	3.3	3.5	4.0	3.3
p0 queue free %	100			100			100	100	99	100	100	98
cM capacity (veh/h)	611			736			162	112	671	131	112	552

Direction, Lane #	EB 1	EB 2	WB 1	WB 2	NB 1	SB 1
Volume Total	427	223	600	310	10	10
Volume Left	0	0	0	0	0	0
Volume Right	0	10	0	10	10	10
cSH	1700	1700	1700	1700	671	552
Volume to Capacity	0.25	0.13	0.35	0.18	0.01	0.02
Queue Length 95th (ft)	0	0	0	0	1	1
Control Delay (s)	0.0	0.0	0.0	0.0	10.4	11.6
Lane LOS					B	B
Approach Delay (s)	0.0		0.0		10.4	11.6
Approach LOS					B	B

Intersection Summary			
Average Delay	0.1		
Intersection Capacity Utilization	35.2%	ICU Level of Service	A
Analysis Period (min)	15		

Intersection	
Int Delay, s/veh	0.1

Movement	EBL	EBT	EBR	WBL	WBT	WBR	NBL	NBT	NBR	SBL	SBT	SBR
Traffic Vol, veh/h	0	640	10	0	900	10	0	0	10	0	0	10
Future Vol, veh/h	0	640	10	0	900	10	0	0	10	0	0	10
Conflicting Peds, #/hr	0	0	0	0	0	0	0	0	0	0	0	0
Sign Control	Free	Free	Free	Free	Free	Free	Stop	Stop	Stop	Stop	Stop	Stop
RT Channelized	-	-	None	-	-	None	-	-	None	-	-	None
Storage Length	-	-	-	-	-	-	-	-	0	-	-	0
Veh in Median Storage, #	-	0	-	-	0	-	-	0	-	-	0	-
Grade, %	-	0	-	-	0	-	-	0	-	-	0	-
Peak Hour Factor	100	100	100	100	100	100	100	100	100	100	100	100
Heavy Vehicles, %	26	26	26	36	36	36	2	2	2	2	2	2
Mvmt Flow	0	640	10	0	900	10	0	0	10	0	0	10

Major/Minor	Major1			Major2			Minor1			Minor2		
Conflicting Flow All	910	0	0	650	0	0	1095	1555	325	1225	1555	455
Stage 1	-	-	-	-	-	-	645	645	-	905	905	-
Stage 2	-	-	-	-	-	-	450	910	-	320	650	-
Critical Hdwy	4.62	-	-	4.82	-	-	7.54	6.54	6.94	7.54	6.54	6.94
Critical Hdwy Stg 1	-	-	-	-	-	-	6.54	5.54	-	6.54	5.54	-
Critical Hdwy Stg 2	-	-	-	-	-	-	6.54	5.54	-	6.54	5.54	-
Follow-up Hdwy	2.46	-	-	2.56	-	-	3.52	4.02	3.32	3.52	4.02	3.32
Pot Cap-1 Maneuver	611	-	-	736	-	-	168	112	671	135	112	552
Stage 1	-	-	-	-	-	-	427	466	-	298	353	-
Stage 2	-	-	-	-	-	-	558	352	-	666	463	-
Platoon blocked, %		-	-		-	-						
Mov Cap-1 Maneuver	611	-	-	736	-	-	165	112	671	133	112	552
Mov Cap-2 Maneuver	-	-	-	-	-	-	165	112	-	133	112	-
Stage 1	-	-	-	-	-	-	427	466	-	298	353	-
Stage 2	-	-	-	-	-	-	548	352	-	656	463	-

Approach	EB	WB	NB	SB
HCM Control Delay, s	0	0	10.4	11.6
HCM LOS			B	B

Minor Lane/Major Mvmt	NBLn1	EBL	EBT	EBR	WBL	WBT	WBR	SBLn1
Capacity (veh/h)	671	611	-	-	736	-	-	552
HCM Lane V/C Ratio	0.015	-	-	-	-	-	-	0.018
HCM Control Delay (s)	10.4	0	-	-	0	-	-	11.6
HCM Lane LOS	B	A	-	-	A	-	-	B
HCM 95th %tile Q(veh)	0	0	-	-	0	-	-	0.1

Movement	EBL	EBT	EBR	WBL	WBT	WBR	NBL	NBT	NBR	SBL	SBT	SBR
Right Turn Channelized			MOYes									MOYes
Traffic Volume (veh/h)	0	220	0	20	660	0	0	0	0	30	0	0
Future Volume (veh/h)	0	220	0	20	660	0	0	0	0	30	0	0
Peak Hour Factor	1.00	1.00	1.00	1.00	1.00	1.00	1.00	1.00	1.00	1.00	1.00	1.00
Hourly flow rate (vph)	0	220	0	20	660	0	0	0	0	30	0	0
Approach Volume (veh/h)		220			680			0			30	
Crossing Volume (veh/h)		50			0			250			680	
High Capacity (veh/h)		1332			1385			1138			808	
High v/c (veh/h)		0.17			0.49			0.00			0.04	
Low Capacity (veh/h)		1113			1161			938			644	
Low v/c (veh/h)		0.20			0.59			0.00			0.05	

Intersection Summary			
Maximum v/c High	0.49		
Maximum v/c Low	0.59		
Intersection Capacity Utilization	60.8%	ICU Level of Service	B

Intersection	
Intersection Delay, s/veh	24.8
Intersection LOS	C

Approach	EB	WB	NB	SB
Entry Lanes	1	1	0	1
Conflicting Circle Lanes	1	1	1	1
Adj Approach Flow, veh/h	220	680	0	30
Demand Flow Rate, veh/h	304	979	0	41
Vehicles Circulating, veh/h	70	0	345	979
Vehicles Exiting, veh/h	950	345	29	0
Follow-Up Headway, s	3.186	3.186	3.186	3.186
Ped Vol Crossing Leg, #/h	0	0	0	0
Ped Cap Adj	1.000	1.000	1.000	1.000
Approach Delay, s/veh	8.1	30.8	0.0	13.3
Approach LOS	A	D	-	B

Lane	Left	Bypass	Left	Left	Bypass
Designated Moves	T	R	LT	LT	R
Assumed Moves	T	R	LT	LT	R
RT Channelized		Free			Free
Lane Util	1.000		1.000	1.000	
Critical Headway, s	5.193		5.193	5.193	
Entry Flow, veh/h	304	0	979	41	0
Cap Entry Lane, veh/h	1054	2622	1130	425	2736
Entry HV Adj Factor	0.725	0.725	0.694	0.732	0.694
Flow Entry, veh/h	220	0	680	30	0
Cap Entry, veh/h	763	1900	785	311	1900
V/C Ratio	0.289	0.000	0.866	0.097	0.000
Control Delay, s/veh	8.1	0.0	30.8	13.3	0.0
LOS	A	A	D	B	A
95th %tile Queue, veh	1	0	11	0	0

Movement	EBL	EBT	EBR	WBL	WBT	WBR	NBL	NBT	NBR	SBL	SBT	SBR
Right Turn Channelized												
Traffic Volume (veh/h)	0	90	0	0	240	0	440	0	0	0	0	0
Future Volume (veh/h)	0	90	0	0	240	0	440	0	0	0	0	0
Peak Hour Factor	1.00	1.00	1.00	1.00	1.00	1.00	1.00	1.00	1.00	1.00	1.00	1.00
Hourly flow rate (vph)	0	90	0	0	240	0	440	0	0	0	0	0
Approach Volume (veh/h)		90			240			440			0	
Crossing Volume (veh/h)		0			440			90			680	
High Capacity (veh/h)		1385			979			1291			808	
High v/c (veh/h)		0.07			0.25			0.34			0.00	
Low Capacity (veh/h)		1161			795			1076			644	
Low v/c (veh/h)		0.08			0.30			0.41			0.00	

Intersection Summary			
Maximum v/c High	0.34		
Maximum v/c Low	0.41		
Intersection Capacity Utilization	58.2%	ICU Level of Service	B

Intersection	
Intersection Delay, s/veh	17.4
Intersection LOS	C

Approach	EB	WB	NB	SB
Entry Lanes	1	1	1	0
Conflicting Circle Lanes	1	1	1	1
Adj Approach Flow, veh/h	90	240	440	0
Demand Flow Rate, veh/h	124	346	634	0
Vehicles Circulating, veh/h	0	634	124	980
Vehicles Exiting, veh/h	980	124	0	0
Follow-Up Headway, s	3.186	3.186	3.186	3.186
Ped Vol Crossing Leg, #/h	0	0	0	0
Ped Cap Adj	1.000	1.000	1.000	1.000
Approach Delay, s/veh	5.5	22.7	17.0	0.0
Approach LOS	A	C	C	-

Lane	Left	Left	Left
Designated Moves	T	T	L
Assumed Moves	T	T	L
RT Channelized			
Lane Util	1.000	1.000	1.000
Critical Headway, s	5.193	5.193	5.193
Entry Flow, veh/h	124	346	634
Cap Entry Lane, veh/h	1130	599	998
Entry HV Adj Factor	0.725	0.694	0.694
Flow Entry, veh/h	90	240	440
Cap Entry, veh/h	819	416	693
V/C Ratio	0.110	0.577	0.635
Control Delay, s/veh	5.5	22.7	17.0
LOS	A	C	C
95th %tile Queue, veh	0	4	5

Movement	EBL	EBT	EBR	WBL	WBT	WBR	NBL	NBT	NBR	SBL	SBT	SBR
Right Turn Channelized			MOYes						MOYes			
Traffic Volume (veh/h)	150	0	40	0	0	0	0	90	60	70	40	0
Future Volume (veh/h)	150	0	40	0	0	0	0	90	60	70	40	0
Peak Hour Factor	1.00	1.00	1.00	1.00	1.00	1.00	1.00	1.00	1.00	1.00	1.00	1.00
Hourly flow rate (vph)	150	0	40	0	0	0	0	90	60	70	40	0
Approach Volume (veh/h)		150			0			90			110	
Crossing Volume (veh/h)		110			240			220			0	
High Capacity (veh/h)		1271			1147			1166			1385	
High v/c (veh/h)		0.12			0.00			0.08			0.08	
Low Capacity (veh/h)		1058			946			962			1161	
Low v/c (veh/h)		0.14			0.00			0.09			0.09	

Intersection Summary			
Maximum v/c High	0.12		
Maximum v/c Low	0.14		
Intersection Capacity Utilization	28.0%	ICU Level of Service	A

Intersection	
Intersection Delay, s/veh	3.7
Intersection LOS	A

Approach	EB	WB	NB	SB
Entry Lanes	1	0	1	1
Conflicting Circle Lanes	1	1	1	1
Adj Approach Flow, veh/h	190	0	150	110
Demand Flow Rate, veh/h	194	0	153	112
Vehicles Circulating, veh/h	112	245	224	0
Vehicles Exiting, veh/h	0	71	41	245
Follow-Up Headway, s	3.186	3.186	3.186	3.186
Ped Vol Crossing Leg, #/h	0	0	0	0
Ped Cap Adj	1.000	1.000	1.000	1.000
Approach Delay, s/veh	4.0	0.0	3.0	4.1
Approach LOS	A	-	A	A

Lane	Left	Bypass	Left	Bypass	Left
Designated Moves	LT	R	T	R	LT
Assumed Moves	LT	R	T	R	LT
RT Channelized		Free		Free	
Lane Util	1.000		1.000		1.000
Critical Headway, s	5.193		5.193		5.193
Entry Flow, veh/h	153	41	92	61	112
Cap Entry Lane, veh/h	1010	1938	903	1938	1130
Entry HV Adj Factor	0.980	0.980	0.980	0.980	0.984
Flow Entry, veh/h	150	40	90	60	110
Cap Entry, veh/h	990	1900	885	1900	1112
V/C Ratio	0.151	0.021	0.102	0.032	0.099
Control Delay, s/veh	5.0	0.0	5.0	0.0	4.1
LOS	A	A	A	A	A
95th %tile Queue, veh	1	0	0	0	0

Movement	EBL	EBT	EBR	WBL	WBT	WBR	NBL	NBT	NBR	SBL	SBT	SBR
Right Turn Channelized						MOYes						MOYes
Traffic Volume (veh/h)	0	0	0	20	0	160	40	330	0	0	160	220
Future Volume (veh/h)	0	0	0	20	0	160	40	330	0	0	160	220
Peak Hour Factor	1.00	1.00	1.00	1.00	1.00	1.00	1.00	1.00	1.00	1.00	1.00	1.00
Hourly flow rate (vph)	0	0	0	20	0	160	40	330	0	0	160	220
Approach Volume (veh/h)		0			20			370			160	
Crossing Volume (veh/h)		180			370			0			60	
High Capacity (veh/h)		1203			1035			1385			1321	
High v/c (veh/h)		0.00			0.02			0.27			0.12	
Low Capacity (veh/h)		996			845			1161			1104	
Low v/c (veh/h)		0.00			0.02			0.32			0.14	

Intersection Summary			
Maximum v/c High	0.27		
Maximum v/c Low	0.32		
Intersection Capacity Utilization	46.5%	ICU Level of Service	A

Intersection	
Intersection Delay, s/veh	3.5
Intersection LOS	A

Approach	EB	WB	NB	SB
Entry Lanes	0	1	1	1
Conflicting Circle Lanes	1	1	1	1
Adj Approach Flow, veh/h	0	180	370	380
Demand Flow Rate, veh/h	0	183	378	387
Vehicles Circulating, veh/h	183	378	0	61
Vehicles Exiting, veh/h	41	0	183	337
Follow-Up Headway, s	3.186	3.186	3.186	3.186
Ped Vol Crossing Leg, #/h	0	0	0	0
Ped Cap Adj	1.000	1.000	1.000	1.000
Approach Delay, s/veh	0.0	0.5	6.5	2.0
Approach LOS	-	A	A	A

Lane	Left	Bypass	Left	Left	Bypass
Designated Moves	LT	R	LT	T	R
Assumed Moves	LT	R	LT	T	R
RT Channelized		Free			Free
Lane Util	1.000		1.000	1.000	
Critical Headway, s	5.193		5.193	5.193	
Entry Flow, veh/h	20	163	378	163	224
Cap Entry Lane, veh/h	774	1938	1130	1063	1938
Entry HV Adj Factor	1.000	0.980	0.980	0.980	0.980
Flow Entry, veh/h	20	160	370	160	220
Cap Entry, veh/h	774	1900	1107	1042	1900
V/C Ratio	0.026	0.084	0.335	0.153	0.116
Control Delay, s/veh	4.9	0.0	6.5	4.8	0.0
LOS	A	A	A	A	A
95th %tile Queue, veh	0	0	1	1	0

Movement	EBL	EBT	EBR	WBL	WBT	WBR	NBL	NBT	NBR	SBL	SBT	SBR
Right Turn Channelized						MOYes						MOYes
Traffic Volume (veh/h)	0	0	0	30	0	220	50	190	0	0	80	80
Future Volume (veh/h)	0	0	0	30	0	220	50	190	0	0	80	80
Peak Hour Factor	1.00	1.00	1.00	1.00	1.00	1.00	1.00	1.00	1.00	1.00	1.00	1.00
Hourly flow rate (vph)	0	0	0	30	0	220	50	190	0	0	80	80
Approach Volume (veh/h)		0			30			240			80	
Crossing Volume (veh/h)		110			240			0			80	
High Capacity (veh/h)		1271			1147			1385			1301	
High v/c (veh/h)		0.00			0.03			0.17			0.06	
Low Capacity (veh/h)		1058			946			1161			1085	
Low v/c (veh/h)		0.00			0.03			0.21			0.07	

Intersection Summary			
Maximum v/c High	0.17		
Maximum v/c Low	0.21		
Intersection Capacity Utilization	33.1%	ICU Level of Service	A

Intersection	
Intersection Delay, s/veh	2.7
Intersection LOS	A

Approach	EB	WB	NB	SB
Entry Lanes	0	1	1	1
Conflicting Circle Lanes	1	1	1	1
Adj Approach Flow, veh/h	0	250	240	160
Demand Flow Rate, veh/h	0	255	245	164
Vehicles Circulating, veh/h	113	245	0	82
Vehicles Exiting, veh/h	51	0	113	194
Follow-Up Headway, s	3.186	3.186	3.186	3.186
Ped Vol Crossing Leg, #/h	0	0	0	0
Ped Cap Adj	1.000	1.000	1.000	1.000
Approach Delay, s/veh	0.0	0.5	5.2	2.1
Approach LOS	-	A	A	A

Lane	Left	Bypass	Left	Left	Bypass
Designated Moves	LT	R	LT	T	R
Assumed Moves	LT	R	LT	T	R
RT Channelized		Free			Free
Lane Util	1.000		1.000	1.000	
Critical Headway, s	5.193		5.193	5.193	
Entry Flow, veh/h	31	224	245	82	82
Cap Entry Lane, veh/h	884	1938	1130	1041	1938
Entry HV Adj Factor	0.968	0.980	0.980	0.980	0.980
Flow Entry, veh/h	30	220	240	80	80
Cap Entry, veh/h	856	1900	1108	1021	1900
V/C Ratio	0.035	0.116	0.217	0.079	0.042
Control Delay, s/veh	4.5	0.0	5.2	4.2	0.0
LOS	A	A	A	A	A
95th %tile Queue, veh	0	0	1	0	0

Movement	EBL	EBT	EBR	WBL	WBT	WBR	NBL	NBT	NBR	SBL	SBT	SBR
Lane Configurations												
Traffic Volume (veh/h)	270	0	0	0	0	0	0	0	0	70	0	0
Future Volume (Veh/h)	270	0	0	0	0	0	0	0	0	70	0	0
Sign Control		Stop			Stop			Free			Free	
Grade		0%			0%			0%			0%	
Peak Hour Factor	1.00	1.00	1.00	1.00	1.00	1.00	1.00	1.00	1.00	1.00	1.00	1.00
Hourly flow rate (vph)	270	0	0	0	0	0	0	0	0	70	0	0
Pedestrians												
Lane Width (ft)												
Walking Speed (ft/s)												
Percent Blockage												
Right turn flare (veh)												
Median type								None			None	
Median storage veh)												
Upstream signal (ft)												
pX, platoon unblocked												
vC, conflicting volume	140	140	0	140	140	0	0			0		
vC1, stage 1 conf vol												
vC2, stage 2 conf vol												
vCu, unblocked vol	140	140	0	140	140	0	0			0		
tC, single (s)	7.1	6.5	6.2	7.1	6.5	6.2	4.1			4.1		
tC, 2 stage (s)												
tF (s)	3.5	4.0	3.3	3.5	4.0	3.3	2.2			2.2		
p0 queue free %	66	100	100	100	100	100	100			96		
cM capacity (veh/h)	803	719	1085	803	719	1085	1623			1623		

Direction, Lane #	EB 1	NB 1	SB 1
Volume Total	270	0	70
Volume Left	270	0	70
Volume Right	0	0	0
cSH	803	1700	1623
Volume to Capacity	0.34	0.00	0.04
Queue Length 95th (ft)	37	0	3
Control Delay (s)	11.7	0.0	7.3
Lane LOS	B		A
Approach Delay (s)	11.7	0.0	7.3
Approach LOS	B		

Intersection Summary			
Average Delay	10.8		
Intersection Capacity Utilization	40.0%	ICU Level of Service	A
Analysis Period (min)	15		

Intersection	
Int Delay, s/veh	0

Movement	EBL	EBT	EBR	WBL	WBT	WBR	NBL	NBT	NBR	SBL	SBT	SBR
Traffic Vol, veh/h	270	0	0	0	0	0	0	0	0	70	0	0
Future Vol, veh/h	270	0	0	0	0	0	0	0	0	70	0	0
Conflicting Peds, #/hr	0	0	0	0	0	0	0	0	0	0	0	0
Sign Control	Stop	Stop	Stop	Stop	Stop	Stop	Free	Free	Free	Free	Free	Free
RT Channelized	-	-	None	-	-	None	-	-	None	-	-	None
Storage Length	-	-	-	-	-	-	-	-	-	-	-	-
Veh in Median Storage, #	-	0	-	-	0	-	-	0	-	-	0	-
Grade, %	-	0	-	-	0	-	-	0	-	-	0	-
Peak Hour Factor	100	100	100	100	100	100	100	100	100	100	100	100
Heavy Vehicles, %	2	2	2	2	2	2	2	2	2	2	2	2
Mvmt Flow	270	0	0	0	0	0	0	0	0	70	0	0

Major/Minor	Minor2			Major1			Major2		
Conflicting Flow All	0	140	0	0	0	0	0	0	0
Stage 1	0	140	-	-	-	-	-	-	-
Stage 2	0	0	-	-	-	-	-	-	-
Critical Hdwy	6.42	6.52	-	-	-	-	4.12	-	-
Critical Hdwy Stg 1	-	-	-	-	-	-	-	-	-
Critical Hdwy Stg 2	5.42	5.52	-	-	-	-	-	-	-
Follow-up Hdwy	3.518	4.018	-	-	-	-	2.218	-	-
Pot Cap-1 Maneuver	-	751	-	-	-	-	-	-	-
Stage 1	-	-	-	-	-	-	-	-	-
Stage 2	-	-	-	-	-	-	-	-	-
Platoon blocked, %					-	-		-	-
Mov Cap-1 Maneuver	-	0	-	-	-	-	-	-	-
Mov Cap-2 Maneuver	-	0	-	-	-	-	-	-	-
Stage 1	-	0	-	-	-	-	-	-	-
Stage 2	-	0	-	-	-	-	-	-	-

Approach	EB	NB	SB
HCM Control Delay, s		0	
HCM LOS	-		

Minor Lane/Major Mvmt	NBL	NBT	NBR	EBLn1	SBL	SBT	SBR
Capacity (veh/h)	-	-	-	-	-	-	-
HCM Lane V/C Ratio	-	-	-	-	-	-	-
HCM Control Delay (s)	0	-	-	-	-	-	-
HCM Lane LOS	A	-	-	-	-	-	-
HCM 95th %tile Q(veh)	-	-	-	-	-	-	-

Movement	EBL	EBT	EBR	WBL	WBT	WBR	NBL	NBT	NBR	SBL	SBT	SBR
Lane Configurations												
Traffic Volume (veh/h)	0	0	0	0	0	130	0	270	0	0	70	130
Future Volume (Veh/h)	0	0	0	0	0	130	0	270	0	0	70	130
Sign Control		Stop			Stop			Free			Free	
Grade		0%			0%			0%			0%	
Peak Hour Factor	1.00	1.00	1.00	1.00	1.00	1.00	1.00	1.00	1.00	1.00	1.00	1.00
Hourly flow rate (vph)	0	0	0	0	0	130	0	270	0	0	70	130
Pedestrians												
Lane Width (ft)												
Walking Speed (ft/s)												
Percent Blockage												
Right turn flare (veh)												
Median type								None			None	
Median storage veh)												
Upstream signal (ft)												
pX, platoon unblocked												
vC, conflicting volume	535	405	135	405	470	270	200			270		
vC1, stage 1 conf vol												
vC2, stage 2 conf vol												
vCu, unblocked vol	535	405	135	405	470	270	200			270		
tC, single (s)	7.1	6.5	6.2	7.1	6.5	6.2	4.1			4.1		
tC, 2 stage (s)												
tF (s)	3.5	4.0	3.3	3.5	4.0	3.3	2.2			2.2		
p0 queue free %	100	100	100	100	100	83	100			100		
cM capacity (veh/h)	379	535	914	556	492	769	1372			1293		

Direction, Lane #	WB 1	NB 1	SB 1
Volume Total	130	270	200
Volume Left	0	0	0
Volume Right	130	0	130
cSH	769	1700	1700
Volume to Capacity	0.17	0.16	0.12
Queue Length 95th (ft)	15	0	0
Control Delay (s)	10.6	0.0	0.0
Lane LOS	B		
Approach Delay (s)	10.6	0.0	0.0
Approach LOS	B		

Intersection Summary			
Average Delay	2.3		
Intersection Capacity Utilization	40.0%	ICU Level of Service	A
Analysis Period (min)	15		

Intersection	
Int Delay, s/veh	2.3

Movement	EBL	EBT	EBR	WBL	WBT	WBR	NBL	NBT	NBR	SBL	SBT	SBR
Traffic Vol, veh/h	0	0	0	0	0	130	0	270	0	0	70	130
Future Vol, veh/h	0	0	0	0	0	130	0	270	0	0	70	130
Conflicting Peds, #/hr	0	0	0	0	0	0	0	0	0	0	0	0
Sign Control	Stop	Stop	Stop	Stop	Stop	Stop	Free	Free	Free	Free	Free	Free
RT Channelized	-	-	None	-	-	None	-	-	None	-	-	None
Storage Length	-	-	-	-	-	-	-	-	-	-	-	-
Veh in Median Storage, #	-	0	-	-	0	-	-	0	-	-	0	-
Grade, %	-	0	-	-	0	-	-	0	-	-	0	-
Peak Hour Factor	100	100	100	100	100	100	100	100	100	100	100	100
Heavy Vehicles, %	2	2	2	2	2	2	2	2	2	2	2	2
Mvmt Flow	0	0	0	0	0	130	0	270	0	0	70	130

Major/Minor	Minor1			Major1			Major2		
Conflicting Flow All	405	470	270	200	0	0	270	0	0
Stage 1	270	270	-	-	-	-	-	-	-
Stage 2	135	200	-	-	-	-	-	-	-
Critical Hdwy	6.42	6.52	6.22	4.12	-	-	4.12	-	-
Critical Hdwy Stg 1	5.42	5.52	-	-	-	-	-	-	-
Critical Hdwy Stg 2	5.42	5.52	-	-	-	-	-	-	-
Follow-up Hdwy	3.518	4.018	3.318	2.218	-	-	2.218	-	-
Pot Cap-1 Maneuver	602	492	769	1372	-	-	1293	-	-
Stage 1	775	686	-	-	-	-	-	-	-
Stage 2	891	736	-	-	-	-	-	-	-
Platoon blocked, %					-	-		-	-
Mov Cap-1 Maneuver	602	0	769	1372	-	-	1293	-	-
Mov Cap-2 Maneuver	602	0	-	-	-	-	-	-	-
Stage 1	775	0	-	-	-	-	-	-	-
Stage 2	891	0	-	-	-	-	-	-	-

Approach	WB	NB	SB
HCM Control Delay, s	10.6	0	0
HCM LOS	B		

Minor Lane/Major Mvmt	NBL	NBT	NBR	WBLn1	SBL	SBT	SBR
Capacity (veh/h)	1372	-	-	769	1293	-	-
HCM Lane V/C Ratio	-	-	-	0.169	-	-	-
HCM Control Delay (s)	0	-	-	10.6	0	-	-
HCM Lane LOS	A	-	-	B	A	-	-
HCM 95th %tile Q(veh)	0	-	-	0.6	0	-	-

Movement	EBL	EBT	EBR	WBL	WBT	WBR	NBL	NBT	NBR	SBL	SBT	SBR
Right Turn Channelized			MOYes						MOYes			
Traffic Volume (veh/h)	320	0	30	0	0	0	0	50	40	150	30	0
Future Volume (veh/h)	320	0	30	0	0	0	0	50	40	150	30	0
Peak Hour Factor	1.00	1.00	1.00	1.00	1.00	1.00	1.00	1.00	1.00	1.00	1.00	1.00
Hourly flow rate (vph)	320	0	30	0	0	0	0	50	40	150	30	0
Approach Volume (veh/h)		320			0			50			180	
Crossing Volume (veh/h)		180			370			470			0	
High Capacity (veh/h)		1203			1035			956			1385	
High v/c (veh/h)		0.27			0.00			0.05			0.13	
Low Capacity (veh/h)		996			845			775			1161	
Low v/c (veh/h)		0.32			0.00			0.06			0.15	

Intersection Summary			
Maximum v/c High	0.27		
Maximum v/c Low	0.32		
Intersection Capacity Utilization	40.9%	ICU Level of Service	A

Intersection	
Intersection Delay, s/veh	5.8
Intersection LOS	A

Approach	EB	WB	NB	SB
Entry Lanes	1	0	1	1
Conflicting Circle Lanes	1	1	1	1
Adj Approach Flow, veh/h	350	0	90	180
Demand Flow Rate, veh/h	357	0	92	184
Vehicles Circulating, veh/h	184	377	479	0
Vehicles Exiting, veh/h	0	153	31	377
Follow-Up Headway, s	3.186	3.186	3.186	3.186
Ped Vol Crossing Leg, #/h	0	0	0	0
Ped Cap Adj	1.000	1.000	1.000	1.000
Approach Delay, s/veh	7.0	0.0	3.3	4.7
Approach LOS	A	-	A	A

Lane	Left	Bypass	Left	Bypass	Left
Designated Moves	LT	R	T	R	LT
Assumed Moves	LT	R	T	R	LT
RT Channelized		Free		Free	
Lane Util	1.000		1.000		1.000
Critical Headway, s	5.193		5.193		5.193
Entry Flow, veh/h	326	31	51	41	184
Cap Entry Lane, veh/h	940	1938	700	1938	1130
Entry HV Adj Factor	0.982	0.980	0.980	0.980	0.980
Flow Entry, veh/h	320	30	50	40	180
Cap Entry, veh/h	923	1900	686	1900	1108
V/C Ratio	0.347	0.016	0.073	0.021	0.163
Control Delay, s/veh	7.7	0.0	6.0	0.0	4.7
LOS	A	A	A	A	A
95th %tile Queue, veh	2	0	0	0	1

Movement	EBL	EBT	WBT	WBR	SBL	SBR
Lane Configurations						
Traffic Volume (vph)	110	820	1390	80	120	280
Future Volume (vph)	110	820	1390	80	120	280
Ideal Flow (vphpl)	2100	2100	2100	2100	2100	2100
Total Lost time (s)	4.0	4.0	4.0		4.0	4.0
Lane Util. Factor	0.97	0.91	0.91		1.00	1.00
Frt	1.00	1.00	0.99		1.00	0.85
Flt Protected	0.95	1.00	1.00		0.95	1.00
Satd. Flow (prot)	3794	5621	5575		1956	1750
Flt Permitted	0.95	1.00	1.00		0.95	1.00
Satd. Flow (perm)	3794	5621	5575		1956	1750
Peak-hour factor, PHF	1.00	1.00	1.00	1.00	1.00	1.00
Adj. Flow (vph)	110	820	1390	80	120	280
RTOR Reduction (vph)	0	0	7	0	0	110
Lane Group Flow (vph)	110	820	1463	0	120	170
Turn Type	Prot	NA	NA		Perm	Perm
Protected Phases	7	4	8			
Permitted Phases					6	6
Actuated Green, G (s)	4.5	31.8	23.3		10.6	10.6
Effective Green, g (s)	4.5	31.8	23.3		10.6	10.6
Actuated g/C Ratio	0.09	0.63	0.46		0.21	0.21
Clearance Time (s)	4.0	4.0	4.0		4.0	4.0
Vehicle Extension (s)	3.0	3.0	3.0		3.0	3.0
Lane Grp Cap (vph)	338	3546	2577		411	368
v/s Ratio Prot	c0.03	0.15	c0.26			
v/s Ratio Perm					0.06	c0.10
v/c Ratio	0.33	0.23	0.57		0.29	0.46
Uniform Delay, d1	21.5	4.0	9.9		16.7	17.4
Progression Factor	1.00	1.00	1.00		1.00	1.00
Incremental Delay, d2	0.6	0.0	0.3		0.4	0.9
Delay (s)	22.1	4.1	10.2		17.1	18.3
Level of Service	C	A	B		B	B
Approach Delay (s)		6.2	10.2		18.0	
Approach LOS		A	B		B	

Intersection Summary			
HCM 2000 Control Delay	10.0	HCM 2000 Level of Service	A
HCM 2000 Volume to Capacity ratio	0.51		
Actuated Cycle Length (s)	50.4	Sum of lost time (s)	12.0
Intersection Capacity Utilization	48.3%	ICU Level of Service	A
Analysis Period (min)	15		

c Critical Lane Group

Movement	EBL	EBT	EBR	WBL	WBT	WBR	NBL	NBT	NBR	SBL	SBT	SBR
Lane Configurations												
Traffic Volume (vph)	80	810	50	70	1290	80	30	10	20	190	40	150
Future Volume (vph)	80	810	50	70	1290	80	30	10	20	190	40	150
Ideal Flow (vphpl)	2100	2100	2100	2100	2100	2100	2100	2100	2100	2100	2100	2100
Total Lost time (s)	4.0	4.0	4.0	4.0	4.0	4.0	4.0	4.0		4.0	4.0	
Lane Util. Factor	1.00	0.91	1.00	1.00	0.91	1.00	1.00	1.00		1.00	1.00	
Frt	1.00	1.00	0.85	1.00	1.00	0.85	1.00	0.90		1.00	0.88	
Flt Protected	0.95	1.00	1.00	0.95	1.00	1.00	0.95	1.00		0.95	1.00	
Satd. Flow (prot)	1956	5621	1750	1956	5621	1750	1956	1853		1956	1815	
Flt Permitted	0.95	1.00	1.00	0.95	1.00	1.00	0.63	1.00		0.74	1.00	
Satd. Flow (perm)	1956	5621	1750	1956	5621	1750	1292	1853		1519	1815	
Peak-hour factor, PHF	1.00	1.00	1.00	1.00	1.00	1.00	1.00	1.00	1.00	1.00	1.00	1.00
Adj. Flow (vph)	80	810	50	70	1290	80	30	10	20	190	40	150
RTOR Reduction (vph)	0	0	32	0	0	49	0	13	0	0	99	0
Lane Group Flow (vph)	80	810	18	70	1290	31	30	17	0	190	91	0
Turn Type	Prot	NA	Perm	Prot	NA	Perm	Perm	NA		Perm	NA	
Protected Phases	7	4		3	8			2			6	
Permitted Phases			4			8	2			6		
Actuated Green, G (s)	3.1	20.0	20.0	4.5	21.4	21.4	18.7	18.7		18.7	18.7	
Effective Green, g (s)	3.1	20.0	20.0	4.5	21.4	21.4	18.7	18.7		18.7	18.7	
Actuated g/C Ratio	0.06	0.36	0.36	0.08	0.39	0.39	0.34	0.34		0.34	0.34	
Clearance Time (s)	4.0	4.0	4.0	4.0	4.0	4.0	4.0	4.0		4.0	4.0	
Vehicle Extension (s)	3.0	3.0	3.0	3.0	3.0	3.0	3.0	3.0		3.0	3.0	
Lane Grp Cap (vph)	109	2036	634	159	2179	678	437	627		514	614	
v/s Ratio Prot	c0.04	0.14		0.04	c0.23			0.01			0.05	
v/s Ratio Perm			0.01			0.02	0.02			c0.13		
v/c Ratio	0.73	0.40	0.03	0.44	0.59	0.05	0.07	0.03		0.37	0.15	
Uniform Delay, d1	25.6	13.1	11.3	24.2	13.4	10.5	12.4	12.2		13.8	12.7	
Progression Factor	1.00	1.00	1.00	1.00	1.00	1.00	1.00	1.00		1.00	1.00	
Incremental Delay, d2	22.3	0.1	0.0	1.9	0.4	0.0	0.3	0.1		2.0	0.5	
Delay (s)	48.0	13.2	11.4	26.1	13.9	10.6	12.7	12.3		15.8	13.2	
Level of Service	D	B	B	C	B	B	B	B		B	B	
Approach Delay (s)		16.1			14.3			12.5			14.5	
Approach LOS		B			B			B			B	

Intersection Summary			
HCM 2000 Control Delay	14.9	HCM 2000 Level of Service	B
HCM 2000 Volume to Capacity ratio	0.51		
Actuated Cycle Length (s)	55.2	Sum of lost time (s)	12.0
Intersection Capacity Utilization	53.5%	ICU Level of Service	A
Analysis Period (min)	15		

c Critical Lane Group

Movement	EBL	EBT	EBR	WBL	WBT	WBR	NBL	NBT	NBR	SBL	SBT	SBR
Lane Configurations												
Traffic Volume (vph)	170	800	40	50	1130	170	20	10	20	130	10	290
Future Volume (vph)	170	800	40	50	1130	170	20	10	20	130	10	290
Ideal Flow (vphpl)	2100	2100	2100	2100	2100	2100	2100	2100	2100	2100	2100	2100
Total Lost time (s)	4.0	4.0	4.0	4.0	4.0	4.0	4.0	4.0		4.0	4.0	4.0
Lane Util. Factor	1.00	0.91	1.00	1.00	0.91	1.00	1.00	1.00		1.00	1.00	1.00
Frt	1.00	1.00	0.85	1.00	1.00	0.85	1.00	0.90		1.00	1.00	0.85
Flt Protected	0.95	1.00	1.00	0.95	1.00	1.00	0.95	1.00		0.95	1.00	1.00
Satd. Flow (prot)	1956	5621	1750	1956	5621	1750	1956	1853		1956	2059	1750
Flt Permitted	0.95	1.00	1.00	0.95	1.00	1.00	0.75	1.00		0.74	1.00	1.00
Satd. Flow (perm)	1956	5621	1750	1956	5621	1750	1546	1853		1519	2059	1750
Peak-hour factor, PHF	1.00	1.00	1.00	1.00	1.00	1.00	1.00	1.00	1.00	1.00	1.00	1.00
Adj. Flow (vph)	170	800	40	50	1130	170	20	10	20	130	10	290
RTOR Reduction (vph)	0	0	22	0	0	109	0	14	0	0	0	16
Lane Group Flow (vph)	170	800	18	50	1130	61	20	16	0	130	10	274
Turn Type	Prot	NA	Perm	Prot	NA	Perm	Perm	NA		Perm	NA	pm+ov
Protected Phases	7	4		3	8			2			6	7
Permitted Phases			4			8	2			6		6
Actuated Green, G (s)	10.8	29.2	29.2	4.4	22.8	22.8	18.3	18.3		18.3	18.3	29.1
Effective Green, g (s)	10.8	29.2	29.2	4.4	22.8	22.8	18.3	18.3		18.3	18.3	29.1
Actuated g/C Ratio	0.17	0.46	0.46	0.07	0.36	0.36	0.29	0.29		0.29	0.29	0.46
Clearance Time (s)	4.0	4.0	4.0	4.0	4.0	4.0	4.0	4.0		4.0	4.0	4.0
Vehicle Extension (s)	3.0	3.0	3.0	3.0	3.0	3.0	3.0	3.0		3.0	3.0	3.0
Lane Grp Cap (vph)	330	2568	799	134	2005	624	442	530		435	589	906
v/s Ratio Prot	c0.09	0.14		0.03	c0.20			0.01			0.00	c0.05
v/s Ratio Perm			0.01			0.03	0.01			0.09		0.11
v/c Ratio	0.52	0.31	0.02	0.37	0.56	0.10	0.05	0.03		0.30	0.02	0.30
Uniform Delay, d1	24.2	11.0	9.5	28.4	16.5	13.7	16.5	16.4		17.8	16.3	11.0
Progression Factor	1.00	1.00	1.00	1.00	1.00	1.00	1.00	1.00		1.00	1.00	1.00
Incremental Delay, d2	1.4	0.1	0.0	1.7	0.4	0.1	0.2	0.1		1.8	0.1	0.2
Delay (s)	25.5	11.1	9.5	30.2	16.9	13.8	16.7	16.5		19.5	16.4	11.2
Level of Service	C	B	A	C	B	B	B	B		B	B	B
Approach Delay (s)		13.4			17.0			16.6			13.8	
Approach LOS		B			B			B			B	

Intersection Summary			
HCM 2000 Control Delay	15.2	HCM 2000 Level of Service	B
HCM 2000 Volume to Capacity ratio	0.47		
Actuated Cycle Length (s)	63.9	Sum of lost time (s)	12.0
Intersection Capacity Utilization	51.5%	ICU Level of Service	A
Analysis Period (min)	15		

c Critical Lane Group

Movement	EBL	EBT	WBT	WBR	SBL	SBR
Lane Configurations						
Traffic Volume (vph)	160	780	1010	80	100	340
Future Volume (vph)	160	780	1010	80	100	340
Ideal Flow (vphpl)	2100	2100	2100	2100	2100	2100
Total Lost time (s)	4.0	4.0	4.0	4.0	4.0	4.0
Lane Util. Factor	0.97	0.95	0.95	1.00	1.00	0.88
Frt	1.00	1.00	1.00	0.85	1.00	0.85
Flt Protected	0.95	1.00	1.00	1.00	0.95	1.00
Satd. Flow (prot)	2977	3069	2912	1303	1956	3080
Flt Permitted	0.95	1.00	1.00	1.00	0.95	1.00
Satd. Flow (perm)	2977	3069	2912	1303	1956	3080
Peak-hour factor, PHF	1.00	1.00	1.00	1.00	1.00	1.00
Adj. Flow (vph)	160	780	1010	80	100	340
RTOR Reduction (vph)	0	0	0	39	0	283
Lane Group Flow (vph)	160	780	1010	41	100	57
Heavy Vehicles (%)	30%	30%	37%	37%	2%	2%
Turn Type	Prot	NA	NA	Perm	Perm	Over
Protected Phases	7	4	8			7
Permitted Phases				8	6	
Actuated Green, G (s)	10.0	44.4	30.4	30.4	7.5	10.0
Effective Green, g (s)	10.0	44.4	30.4	30.4	7.5	10.0
Actuated g/C Ratio	0.17	0.74	0.51	0.51	0.13	0.17
Clearance Time (s)	4.0	4.0	4.0	4.0	4.0	4.0
Vehicle Extension (s)	3.0	3.0	3.0	3.0	3.0	3.0
Lane Grp Cap (vph)	496	2274	1477	661	244	514
v/s Ratio Prot	0.05	c0.25	c0.35			0.02
v/s Ratio Perm				0.03	c0.05	
v/c Ratio	0.32	0.34	0.68	0.06	0.41	0.11
Uniform Delay, d1	22.0	2.7	11.1	7.5	24.2	21.2
Progression Factor	1.00	1.00	1.00	1.00	1.00	1.00
Incremental Delay, d2	0.4	0.1	1.3	0.0	1.1	0.1
Delay (s)	22.3	2.8	12.5	7.5	25.3	21.3
Level of Service	C	A	B	A	C	C
Approach Delay (s)		6.1	12.1		22.2	
Approach LOS		A	B		C	

Intersection Summary			
HCM 2000 Control Delay	11.6	HCM 2000 Level of Service	B
HCM 2000 Volume to Capacity ratio	0.58		
Actuated Cycle Length (s)	59.9	Sum of lost time (s)	12.0
Intersection Capacity Utilization	44.4%	ICU Level of Service	A
Analysis Period (min)	15		
c Critical Lane Group			

Movement	EBL	EBT	EBR	WBL	WBT	WBR	NBL	NBT	NBR	SBL	SBT	SBR
Lane Configurations												
Traffic Volume (vph)	80	730	80	20	880	140	40	10	10	160	40	170
Future Volume (vph)	80	730	80	20	880	140	40	10	10	160	40	170
Ideal Flow (vphpl)	2100	2100	2100	2100	2100	2100	2100	2100	2100	2100	2100	2100
Total Lost time (s)	4.0	4.0	4.0	4.0	4.0	4.0	4.0	4.0		4.0	4.0	4.0
Lane Util. Factor	0.97	0.95	1.00	1.00	0.95	1.00	1.00	1.00		1.00	1.00	1.00
Frt	1.00	1.00	0.85	1.00	1.00	0.85	1.00	0.93		1.00	1.00	0.85
Flt Protected	0.95	1.00	1.00	0.95	1.00	1.00	0.95	1.00		0.95	1.00	1.00
Satd. Flow (prot)	2977	3069	1373	1435	2871	1284	1956	1904		1956	2059	1750
Flt Permitted	0.95	1.00	1.00	0.95	1.00	1.00	0.73	1.00		0.74	1.00	1.00
Satd. Flow (perm)	2977	3069	1373	1435	2871	1284	1505	1904		1532	2059	1750
Peak-hour factor, PHF	1.00	1.00	1.00	1.00	1.00	1.00	1.00	1.00	1.00	1.00	1.00	1.00
Adj. Flow (vph)	80	730	80	20	880	140	40	10	10	160	40	170
RTOR Reduction (vph)	0	0	45	0	0	84	0	6	0	0	0	103
Lane Group Flow (vph)	80	730	35	20	880	56	40	14	0	160	40	67
Heavy Vehicles (%)	30%	30%	30%	39%	39%	39%	2%	2%	2%	2%	2%	2%
Turn Type	Prot	NA	Perm	Prot	NA	Perm	Perm	NA		Perm	NA	Perm
Protected Phases	7	4		3	8			2			6	
Permitted Phases			4			8	2			6		6
Actuated Green, G (s)	6.1	38.0	38.0	2.9	34.8	34.8	34.6	34.6		34.6	34.6	34.6
Effective Green, g (s)	6.1	38.0	38.0	2.9	34.8	34.8	34.6	34.6		34.6	34.6	34.6
Actuated g/C Ratio	0.07	0.43	0.43	0.03	0.40	0.40	0.40	0.40		0.40	0.40	0.40
Clearance Time (s)	4.0	4.0	4.0	4.0	4.0	4.0	4.0	4.0		4.0	4.0	4.0
Vehicle Extension (s)	3.0	3.0	3.0	3.0	3.0	3.0	3.0	3.0		3.0	3.0	3.0
Lane Grp Cap (vph)	207	1332	596	47	1141	510	595	752		605	814	692
v/s Ratio Prot	c0.03	c0.24		0.01	c0.31			0.01			0.02	
v/s Ratio Perm			0.03			0.04	0.03			c0.10		0.04
v/c Ratio	0.39	0.55	0.06	0.43	0.77	0.11	0.07	0.02		0.26	0.05	0.10
Uniform Delay, d1	38.9	18.4	14.4	41.5	22.9	16.6	16.4	16.1		17.9	16.3	16.6
Progression Factor	1.00	1.00	1.00	1.00	1.00	1.00	1.00	1.00		1.00	1.00	1.00
Incremental Delay, d2	1.2	0.5	0.0	6.1	3.3	0.1	0.2	0.0		1.1	0.1	0.3
Delay (s)	40.1	18.8	14.4	47.6	26.2	16.7	16.6	16.2		18.9	16.4	16.9
Level of Service	D	B	B	D	C	B	B	B		B	B	B
Approach Delay (s)		20.4			25.3			16.5			17.7	
Approach LOS		C			C			B			B	

Intersection Summary			
HCM 2000 Control Delay	22.0	HCM 2000 Level of Service	C
HCM 2000 Volume to Capacity ratio	0.50		
Actuated Cycle Length (s)	87.5	Sum of lost time (s)	12.0
Intersection Capacity Utilization	50.0%	ICU Level of Service	A
Analysis Period (min)	15		
c Critical Lane Group			

Movement	EBL	EBT	WBU	WBT	WBR	SBL	SBR
Lane Configurations							
Traffic Volume (vph)	10	880	30	1020	10	20	20
Future Volume (vph)	10	880	30	1020	10	20	20
Ideal Flow (vphpl)	2100	2100	2100	2100	2100	2100	2100
Total Lost time (s)	4.0	4.0	4.0	4.0	4.0	4.0	4.0
Lane Util. Factor	1.00	0.95	1.00	0.95	1.00	1.00	1.00
Frt	1.00	1.00	1.00	1.00	0.85	1.00	0.85
Flt Protected	0.95	1.00	0.95	1.00	1.00	0.95	1.00
Satd. Flow (prot)	1535	3069	1956	2871	1284	1956	1750
Flt Permitted	0.95	1.00	0.95	1.00	1.00	0.95	1.00
Satd. Flow (perm)	1535	3069	1956	2871	1284	1956	1750
Peak-hour factor, PHF	1.00	1.00	1.00	1.00	1.00	1.00	1.00
Adj. Flow (vph)	10	880	30	1020	10	20	20
RTOR Reduction (vph)	0	0	0	0	5	0	14
Lane Group Flow (vph)	10	880	30	1020	5	20	6
Heavy Vehicles (%)	30%	30%	2%	39%	39%	2%	2%
Turn Type	Prot	NA	Prot	NA	Perm	Prot	Perm
Protected Phases	7	4	3	8		6	
Permitted Phases					8		6
Actuated Green, G (s)	0.6	24.0	2.4	25.8	25.8	16.6	16.6
Effective Green, g (s)	0.6	24.0	2.4	25.8	25.8	16.6	16.6
Actuated g/C Ratio	0.01	0.44	0.04	0.47	0.47	0.30	0.30
Clearance Time (s)	4.0	4.0	4.0	4.0	4.0	4.0	4.0
Vehicle Extension (s)	3.0	3.0	3.0	3.0	3.0	3.0	3.0
Lane Grp Cap (vph)	16	1339	85	1346	602	590	528
v/s Ratio Prot	0.01	0.29	c0.02	c0.36		c0.01	
v/s Ratio Perm					0.00		0.00
v/c Ratio	0.62	0.66	0.35	0.76	0.01	0.03	0.01
Uniform Delay, d1	27.1	12.2	25.5	12.0	7.8	13.5	13.5
Progression Factor	1.00	1.00	1.00	1.00	1.00	1.00	1.00
Incremental Delay, d2	57.6	1.2	2.5	2.5	0.0	0.1	0.0
Delay (s)	84.7	13.4	28.1	14.5	7.8	13.7	13.5
Level of Service	F	B	C	B	A	B	B
Approach Delay (s)		14.2		14.8		13.6	
Approach LOS		B		B		B	

Intersection Summary			
HCM 2000 Control Delay	14.5	HCM 2000 Level of Service	B
HCM 2000 Volume to Capacity ratio	0.48		
Actuated Cycle Length (s)	55.0	Sum of lost time (s)	12.0
Intersection Capacity Utilization	35.5%	ICU Level of Service	A
Analysis Period (min)	15		
c Critical Lane Group			

Movement	EBL	EBT	EBR	WBL	WBT	WBR	NBL	NBT	NBR	SBL	SBT	SBR
Lane Configurations												
Traffic Volume (veh/h)	0	840	90	0	1040	10	0	0	10	0	0	10
Future Volume (Veh/h)	0	840	90	0	1040	10	0	0	10	0	0	10
Sign Control		Free			Free			Stop			Stop	
Grade		0%			0%			0%			0%	
Peak Hour Factor	1.00	1.00	1.00	1.00	1.00	1.00	1.00	1.00	1.00	1.00	1.00	1.00
Hourly flow rate (vph)	0	840	90	0	1040	10	0	0	10	0	0	10
Pedestrians												
Lane Width (ft)												
Walking Speed (ft/s)												
Percent Blockage												
Right turn flare (veh)												
Median type		None			None							
Median storage veh)												
Upstream signal (ft)												
pX, platoon unblocked												
vC, conflicting volume	1050			930			1415	1935	465	1475	1975	525
vC1, stage 1 conf vol												
vC2, stage 2 conf vol												
vCu, unblocked vol	1050			930			1415	1935	465	1475	1975	525
tC, single (s)	4.1			4.1			7.5	6.5	6.9	7.5	6.5	6.9
tC, 2 stage (s)												
tF (s)	2.2			2.2			3.5	4.0	3.3	3.5	4.0	3.3
p0 queue free %	100			100			100	100	98	100	100	98
cM capacity (veh/h)	659			731			96	65	544	86	61	497

Direction, Lane #	EB 1	EB 2	WB 1	WB 2	NB 1	SB 1
Volume Total	560	370	693	357	10	10
Volume Left	0	0	0	0	0	0
Volume Right	0	90	0	10	10	10
cSH	1700	1700	1700	1700	544	497
Volume to Capacity	0.33	0.22	0.41	0.21	0.02	0.02
Queue Length 95th (ft)	0	0	0	0	1	2
Control Delay (s)	0.0	0.0	0.0	0.0	11.7	12.4
Lane LOS					B	B
Approach Delay (s)	0.0		0.0		11.7	12.4
Approach LOS					B	B

Intersection Summary			
Average Delay	0.1		
Intersection Capacity Utilization	36.3%	ICU Level of Service	A
Analysis Period (min)	15		

Intersection	
Int Delay, s/veh	0.1

Movement	EBL	EBT	EBR	WBL	WBT	WBR	NBL	NBT	NBR	SBL	SBT	SBR
Traffic Vol, veh/h	0	840	90	0	1040	10	0	0	10	0	0	10
Future Vol, veh/h	0	840	90	0	1040	10	0	0	10	0	0	10
Conflicting Peds, #/hr	0	0	0	0	0	0	0	0	0	0	0	0
Sign Control	Free	Free	Free	Free	Free	Free	Stop	Stop	Stop	Stop	Stop	Stop
RT Channelized	-	-	None	-	-	None	-	-	None	-	-	None
Storage Length	-	-	-	-	-	-	-	-	0	-	-	0
Veh in Median Storage, #	-	0	-	-	0	-	-	0	-	-	0	-
Grade, %	-	0	-	-	0	-	-	0	-	-	0	-
Peak Hour Factor	100	100	100	100	100	100	100	100	100	100	100	100
Heavy Vehicles, %	2	2	2	2	2	2	2	2	2	2	2	2
Mvmt Flow	0	840	90	0	1040	10	0	0	10	0	0	10

Major/Minor	Major1			Major2			Minor1			Minor2		
Conflicting Flow All	1050	0	0	930	0	0	1405	1935	465	1465	1975	525
Stage 1	-	-	-	-	-	-	885	885	-	1045	1045	-
Stage 2	-	-	-	-	-	-	520	1050	-	420	930	-
Critical Hdwy	4.14	-	-	4.14	-	-	7.54	6.54	6.94	7.54	6.54	6.94
Critical Hdwy Stg 1	-	-	-	-	-	-	6.54	5.54	-	6.54	5.54	-
Critical Hdwy Stg 2	-	-	-	-	-	-	6.54	5.54	-	6.54	5.54	-
Follow-up Hdwy	2.22	-	-	2.22	-	-	3.52	4.02	3.32	3.52	4.02	3.32
Pot Cap-1 Maneuver	659	-	-	731	-	-	99	65	544	89	61	497
Stage 1	-	-	-	-	-	-	306	361	-	245	304	-
Stage 2	-	-	-	-	-	-	507	302	-	581	344	-
Platoon blocked, %		-	-		-	-						
Mov Cap-1 Maneuver	659	-	-	731	-	-	97	65	544	87	61	497
Mov Cap-2 Maneuver	-	-	-	-	-	-	97	65	-	87	61	-
Stage 1	-	-	-	-	-	-	306	361	-	245	304	-
Stage 2	-	-	-	-	-	-	497	302	-	570	344	-

Approach	EB	WB	NB	SB
HCM Control Delay, s	0	0	11.7	12.4
HCM LOS			B	B

Minor Lane/Major Mvmt	NBLn1	EBL	EBT	EBR	WBL	WBT	WBR	SBLn1
Capacity (veh/h)	544	659	-	-	731	-	-	497
HCM Lane V/C Ratio	0.018	-	-	-	-	-	-	0.02
HCM Control Delay (s)	11.7	0	-	-	0	-	-	12.4
HCM Lane LOS	B	A	-	-	A	-	-	B
HCM 95th %tile Q(veh)	0.1	0	-	-	0	-	-	0.1

Movement	EBL	EBT	EBR	WBL	WBT	WBR	NBL	NBT	NBR	SBL	SBT	SBR
Lane Configurations												
Traffic Volume (veh/h)	0	850	10	0	1050	10	0	0	10	0	0	10
Future Volume (Veh/h)	0	850	10	0	1050	10	0	0	10	0	0	10
Sign Control		Free			Free			Stop			Stop	
Grade		0%			0%			0%			0%	
Peak Hour Factor	1.00	1.00	1.00	1.00	1.00	1.00	1.00	1.00	1.00	1.00	1.00	1.00
Hourly flow rate (vph)	0	850	10	0	1050	10	0	0	10	0	0	10
Pedestrians												
Lane Width (ft)												
Walking Speed (ft/s)												
Percent Blockage												
Right turn flare (veh)												
Median type		None			None							
Median storage veh)												
Upstream signal (ft)												
pX, platoon unblocked												
vC, conflicting volume	1060			860			1390	1915	430	1490	1915	530
vC1, stage 1 conf vol												
vC2, stage 2 conf vol												
vCu, unblocked vol	1060			860			1390	1915	430	1490	1915	530
tC, single (s)	4.1			4.1			7.5	6.5	6.9	7.5	6.5	6.9
tC, 2 stage (s)												
tF (s)	2.2			2.2			3.5	4.0	3.3	3.5	4.0	3.3
p0 queue free %	100			100			100	100	98	100	100	98
cM capacity (veh/h)	653			777			100	67	573	84	67	493

Direction, Lane #	EB 1	EB 2	WB 1	WB 2	NB 1	SB 1
Volume Total	567	293	700	360	10	10
Volume Left	0	0	0	0	0	0
Volume Right	0	10	0	10	10	10
cSH	1700	1700	1700	1700	573	493
Volume to Capacity	0.33	0.17	0.41	0.21	0.02	0.02
Queue Length 95th (ft)	0	0	0	0	1	2
Control Delay (s)	0.0	0.0	0.0	0.0	11.4	12.4
Lane LOS					B	B
Approach Delay (s)	0.0		0.0		11.4	12.4
Approach LOS					B	B

Intersection Summary			
Average Delay	0.1		
Intersection Capacity Utilization	36.5%	ICU Level of Service	A
Analysis Period (min)	15		

Intersection	
Int Delay, s/veh	0.1

Movement	EBL	EBT	EBR	WBL	WBT	WBR	NBL	NBT	NBR	SBL	SBT	SBR
Traffic Vol, veh/h	0	850	10	0	1050	10	0	0	10	0	0	10
Future Vol, veh/h	0	850	10	0	1050	10	0	0	10	0	0	10
Conflicting Peds, #/hr	0	0	0	0	0	0	0	0	0	0	0	0
Sign Control	Free	Free	Free	Free	Free	Free	Stop	Stop	Stop	Stop	Stop	Stop
RT Channelized	-	-	None	-	-	None	-	-	None	-	-	None
Storage Length	-	-	-	-	-	-	-	-	0	-	-	0
Veh in Median Storage, #	-	0	-	-	0	-	-	0	-	-	0	-
Grade, %	-	0	-	-	0	-	-	0	-	-	0	-
Peak Hour Factor	100	100	100	100	100	100	100	100	100	100	100	100
Heavy Vehicles, %	2	2	2	2	2	2	2	2	2	2	2	2
Mvmt Flow	0	850	10	0	1050	10	0	0	10	0	0	10

Major/Minor	Major1			Major2			Minor1			Minor2		
Conflicting Flow All	1060	0	0	860	0	0	1380	1915	430	1480	1915	530
Stage 1	-	-	-	-	-	-	855	855	-	1055	1055	-
Stage 2	-	-	-	-	-	-	525	1060	-	425	860	-
Critical Hdwy	4.14	-	-	4.14	-	-	7.54	6.54	6.94	7.54	6.54	6.94
Critical Hdwy Stg 1	-	-	-	-	-	-	6.54	5.54	-	6.54	5.54	-
Critical Hdwy Stg 2	-	-	-	-	-	-	6.54	5.54	-	6.54	5.54	-
Follow-up Hdwy	2.22	-	-	2.22	-	-	3.52	4.02	3.32	3.52	4.02	3.32
Pot Cap-1 Maneuver	653	-	-	777	-	-	104	67	573	87	67	493
Stage 1	-	-	-	-	-	-	319	373	-	241	301	-
Stage 2	-	-	-	-	-	-	504	299	-	578	371	-
Platoon blocked, %		-	-		-	-						
Mov Cap-1 Maneuver	653	-	-	777	-	-	102	67	573	85	67	493
Mov Cap-2 Maneuver	-	-	-	-	-	-	102	67	-	85	67	-
Stage 1	-	-	-	-	-	-	319	373	-	241	301	-
Stage 2	-	-	-	-	-	-	494	299	-	568	371	-

Approach	EB	WB	NB	SB
HCM Control Delay, s	0	0	11.4	12.5
HCM LOS			B	B

Minor Lane/Major Mvmt	NBLn1	EBL	EBT	EBR	WBL	WBT	WBR	SBLn1
Capacity (veh/h)	573	653	-	-	777	-	-	493
HCM Lane V/C Ratio	0.017	-	-	-	-	-	-	0.02
HCM Control Delay (s)	11.4	0	-	-	0	-	-	12.5
HCM Lane LOS	B	A	-	-	A	-	-	B
HCM 95th %tile Q(veh)	0.1	0	-	-	0	-	-	0.1

Movement	EBL	EBT	EBR	WBL	WBT	WBR	NBL	NBT	NBR	SBL	SBT	SBR
Lane Configurations												
Traffic Volume (veh/h)	0	750	90	0	1030	10	0	0	30	0	0	20
Future Volume (Veh/h)	0	750	90	0	1030	10	0	0	30	0	0	20
Sign Control		Free			Free			Stop			Stop	
Grade		0%			0%			0%			0%	
Peak Hour Factor	1.00	1.00	1.00	1.00	1.00	1.00	1.00	1.00	1.00	1.00	1.00	1.00
Hourly flow rate (vph)	0	750	90	0	1030	10	0	0	30	0	0	20
Pedestrians												
Lane Width (ft)												
Walking Speed (ft/s)												
Percent Blockage												
Right turn flare (veh)												
Median type		None			None							
Median storage veh)												
Upstream signal (ft)												
pX, platoon unblocked												
vC, conflicting volume	1040			840			1330	1835	420	1440	1875	520
vC1, stage 1 conf vol												
vC2, stage 2 conf vol												
vCu, unblocked vol	1040			840			1330	1835	420	1440	1875	520
tC, single (s)	4.8			4.1			7.5	6.5	6.9	7.5	6.5	6.9
tC, 2 stage (s)												
tF (s)	2.5			2.2			3.5	4.0	3.3	3.5	4.0	3.3
p0 queue free %	100			100			100	100	95	100	100	96
cM capacity (veh/h)	507			791			108	75	582	89	71	501

Direction, Lane #	EB 1	EB 2	WB 1	WB 2	NB 1	SB 1
Volume Total	500	340	687	353	30	20
Volume Left	0	0	0	0	0	0
Volume Right	0	90	0	10	30	20
cSH	1700	1700	1700	1700	582	501
Volume to Capacity	0.29	0.20	0.40	0.21	0.05	0.04
Queue Length 95th (ft)	0	0	0	0	4	3
Control Delay (s)	0.0	0.0	0.0	0.0	11.5	12.5
Lane LOS					B	B
Approach Delay (s)	0.0		0.0		11.5	12.5
Approach LOS					B	B

Intersection Summary			
Average Delay	0.3		
Intersection Capacity Utilization	36.0%	ICU Level of Service	A
Analysis Period (min)	15		

Intersection	
Int Delay, s/veh	0.3

Movement	EBL	EBT	EBR	WBL	WBT	WBR	NBL	NBT	NBR	SBL	SBT	SBR
Traffic Vol, veh/h	0	750	90	0	1030	10	0	0	30	0	0	20
Future Vol, veh/h	0	750	90	0	1030	10	0	0	30	0	0	20
Conflicting Peds, #/hr	0	0	0	0	0	0	0	0	0	0	0	0
Sign Control	Free	Free	Free	Free	Free	Free	Stop	Stop	Stop	Stop	Stop	Stop
RT Channelized	-	-	None	-	-	None	-	-	None	-	-	None
Storage Length	-	-	-	-	-	-	-	-	0	-	-	0
Veh in Median Storage, #	-	0	-	-	0	-	-	0	-	-	0	-
Grade, %	-	0	-	-	0	-	-	0	-	-	0	-
Peak Hour Factor	100	100	100	100	100	100	100	100	100	100	100	100
Heavy Vehicles, %	33	33	2	2	41	41	2	2	2	2	2	2
Mvmt Flow	0	750	90	0	1030	10	0	0	30	0	0	20

Major/Minor	Major1			Major2			Minor1			Minor2		
Conflicting Flow All	1040	0	0	840	0	0	1310	1835	420	1410	1875	520
Stage 1	-	-	-	-	-	-	795	795	-	1035	1035	-
Stage 2	-	-	-	-	-	-	515	1040	-	375	840	-
Critical Hdwy	4.76	-	-	4.14	-	-	7.54	6.54	6.94	7.54	6.54	6.94
Critical Hdwy Stg 1	-	-	-	-	-	-	6.54	5.54	-	6.54	5.54	-
Critical Hdwy Stg 2	-	-	-	-	-	-	6.54	5.54	-	6.54	5.54	-
Follow-up Hdwy	2.53	-	-	2.22	-	-	3.52	4.02	3.32	3.52	4.02	3.32
Pot Cap-1 Maneuver	507	-	-	791	-	-	117	75	582	98	71	501
Stage 1	-	-	-	-	-	-	347	398	-	248	307	-
Stage 2	-	-	-	-	-	-	511	306	-	618	379	-
Platoon blocked, %		-	-		-	-						
Mov Cap-1 Maneuver	507	-	-	791	-	-	112	75	582	93	71	501
Mov Cap-2 Maneuver	-	-	-	-	-	-	112	75	-	93	71	-
Stage 1	-	-	-	-	-	-	347	398	-	248	307	-
Stage 2	-	-	-	-	-	-	491	306	-	586	379	-

Approach	EB	WB	NB	SB
HCM Control Delay, s	0	0	11.5	12.5
HCM LOS			B	B

Minor Lane/Major Mvmt	NBLn1	EBL	EBT	EBR	WBL	WBT	WBR	SBLn1
Capacity (veh/h)	582	507	-	-	791	-	-	501
HCM Lane V/C Ratio	0.052	-	-	-	-	-	-	0.04
HCM Control Delay (s)	11.5	0	-	-	0	-	-	12.5
HCM Lane LOS	B	A	-	-	A	-	-	B
HCM 95th %tile Q(veh)	0.2	0	-	-	0	-	-	0.1

Movement	EBL	EBT	EBR	WBL	WBT	WBR	NBL	NBT	NBR	SBL	SBT	SBR
Lane Configurations												
Traffic Volume (vph)	50	670	80	20	970	10	30	10	10	30	10	20
Future Volume (vph)	50	670	80	20	970	10	30	10	10	30	10	20
Ideal Flow (vphpl)	2100	2100	2100	2100	2100	2100	2100	2100	2100	2100	2100	2100
Total Lost time (s)	4.0	4.0	4.0	4.0	4.0		4.0	4.0		4.0	4.0	
Lane Util. Factor	1.00	0.95	1.00	1.00	0.95		1.00	1.00		1.00	1.00	
Frt	1.00	1.00	0.85	1.00	1.00		1.00	0.93		1.00	0.90	
Flt Protected	0.95	1.00	1.00	0.95	1.00		0.95	1.00		0.95	1.00	
Satd. Flow (prot)	1500	3000	1342	1415	2825		1956	1904		1956	1853	
Flt Permitted	0.26	1.00	1.00	0.40	1.00		0.74	1.00		0.74	1.00	
Satd. Flow (perm)	414	3000	1342	591	2825		1519	1904		1532	1853	
Peak-hour factor, PHF	1.00	1.00	1.00	1.00	1.00	1.00	1.00	1.00	1.00	1.00	1.00	1.00
Adj. Flow (vph)	50	670	80	20	970	10	30	10	10	30	10	20
RTOR Reduction (vph)	0	0	36	0	1	0	0	8	0	0	16	0
Lane Group Flow (vph)	50	670	44	20	979	0	30	12	0	30	14	0
Heavy Vehicles (%)	33%	33%	33%	41%	41%	41%	2%	2%	2%	2%	2%	2%
Turn Type	Perm	NA	Perm	Perm	NA		Perm	NA		Perm	NA	
Protected Phases		4			8			2			6	
Permitted Phases	4		4	8			2			6		
Actuated Green, G (s)	17.4	17.4	17.4	17.4	17.4		6.4	6.4		6.4	6.4	
Effective Green, g (s)	17.4	17.4	17.4	17.4	17.4		6.4	6.4		6.4	6.4	
Actuated g/C Ratio	0.55	0.55	0.55	0.55	0.55		0.20	0.20		0.20	0.20	
Clearance Time (s)	4.0	4.0	4.0	4.0	4.0		4.0	4.0		4.0	4.0	
Vehicle Extension (s)	3.0	3.0	3.0	3.0	3.0		3.0	3.0		3.0	3.0	
Lane Grp Cap (vph)	226	1641	734	323	1545		305	383		308	372	
v/s Ratio Prot		0.22			c0.35			0.01			0.01	
v/s Ratio Perm	0.12		0.03	0.03			c0.02			0.02		
v/c Ratio	0.22	0.41	0.06	0.06	0.63		0.10	0.03		0.10	0.04	
Uniform Delay, d1	3.7	4.2	3.4	3.4	5.0		10.3	10.2		10.3	10.2	
Progression Factor	1.00	1.00	1.00	1.00	1.00		1.00	1.00		1.00	1.00	
Incremental Delay, d2	0.5	0.2	0.0	0.1	0.9		0.1	0.0		0.1	0.0	
Delay (s)	4.2	4.4	3.4	3.5	5.8		10.5	10.2		10.5	10.3	
Level of Service	A	A	A	A	A		B	B		B	B	
Approach Delay (s)		4.3			5.8			10.4			10.4	
Approach LOS		A			A			B			B	

Intersection Summary			
HCM 2000 Control Delay	5.4	HCM 2000 Level of Service	A
HCM 2000 Volume to Capacity ratio	0.49		
Actuated Cycle Length (s)	31.8	Sum of lost time (s)	8.0
Intersection Capacity Utilization	46.1%	ICU Level of Service	A
Analysis Period (min)	15		
c Critical Lane Group			

Movement	EBL	EBT	EBR	WBL	WBT	WBR	NBL	NBT	NBR	SBL	SBT	SBR
Lane Configurations												
Traffic Volume (veh/h)	0	630	80	0	970	10	0	0	10	0	0	20
Future Volume (Veh/h)	0	630	80	0	970	10	0	0	10	0	0	20
Sign Control		Free			Free			Stop			Stop	
Grade		0%			0%			0%			0%	
Peak Hour Factor	1.00	1.00	1.00	1.00	1.00	1.00	1.00	1.00	1.00	1.00	1.00	1.00
Hourly flow rate (vph)	0	630	80	0	970	10	0	0	10	0	0	20
Pedestrians												
Lane Width (ft)												
Walking Speed (ft/s)												
Percent Blockage												
Right turn flare (veh)												
Median type		None			None							
Median storage veh)												
Upstream signal (ft)												
pX, platoon unblocked												
vC, conflicting volume	980			710			1175	1650	355	1300	1685	490
vC1, stage 1 conf vol												
vC2, stage 2 conf vol												
vCu, unblocked vol	980			710			1175	1650	355	1300	1685	490
tC, single (s)	4.7			4.9			7.5	6.5	6.9	7.5	6.5	6.9
tC, 2 stage (s)												
tF (s)	2.5			2.6			3.5	4.0	3.3	3.5	4.0	3.3
p0 queue free %	100			100			100	100	98	100	100	96
cM capacity (veh/h)	548			678			141	98	641	117	93	524

Direction, Lane #	EB 1	EB 2	WB 1	WB 2	NB 1	SB 1
Volume Total	420	290	647	333	10	20
Volume Left	0	0	0	0	0	0
Volume Right	0	80	0	10	10	20
cSH	1700	1700	1700	1700	641	524
Volume to Capacity	0.25	0.17	0.38	0.20	0.02	0.04
Queue Length 95th (ft)	0	0	0	0	1	3
Control Delay (s)	0.0	0.0	0.0	0.0	10.7	12.1
Lane LOS					B	B
Approach Delay (s)	0.0		0.0		10.7	12.1
Approach LOS					B	B

Intersection Summary			
Average Delay	0.2		
Intersection Capacity Utilization	34.5%	ICU Level of Service	A
Analysis Period (min)	15		

Intersection	
Int Delay, s/veh	0.2

Movement	EBL	EBT	EBR	WBL	WBT	WBR	NBL	NBT	NBR	SBL	SBT	SBR
Traffic Vol, veh/h	0	630	80	0	970	10	0	0	10	0	0	20
Future Vol, veh/h	0	630	80	0	970	10	0	0	10	0	0	20
Conflicting Peds, #/hr	0	0	0	0	0	0	0	0	0	0	0	0
Sign Control	Free	Free	Free	Free	Free	Free	Stop	Stop	Stop	Stop	Stop	Stop
RT Channelized	-	-	None	-	-	None	-	-	None	-	-	None
Storage Length	-	-	-	-	-	-	-	-	0	-	-	0
Veh in Median Storage, #	-	0	-	-	0	-	-	0	-	-	0	-
Grade, %	-	0	-	-	0	-	-	0	-	-	0	-
Peak Hour Factor	100	100	100	100	100	100	100	100	100	100	100	100
Heavy Vehicles, %	31	31	31	39	39	39	2	2	2	2	2	2
Mvmt Flow	0	630	80	0	970	10	0	0	10	0	0	20

Major/Minor	Major1			Major2			Minor1			Minor2		
Conflicting Flow All	980	0	0	710	0	0	1155	1650	355	1290	1685	490
Stage 1	-	-	-	-	-	-	670	670	-	975	975	-
Stage 2	-	-	-	-	-	-	485	980	-	315	710	-
Critical Hdwy	4.72	-	-	4.88	-	-	7.54	6.54	6.94	7.54	6.54	6.94
Critical Hdwy Stg 1	-	-	-	-	-	-	6.54	5.54	-	6.54	5.54	-
Critical Hdwy Stg 2	-	-	-	-	-	-	6.54	5.54	-	6.54	5.54	-
Follow-up Hdwy	2.51	-	-	2.59	-	-	3.52	4.02	3.32	3.52	4.02	3.32
Pot Cap-1 Maneuver	548	-	-	678	-	-	152	98	641	121	93	524
Stage 1	-	-	-	-	-	-	413	454	-	270	328	-
Stage 2	-	-	-	-	-	-	532	326	-	671	435	-
Platoon blocked, %		-	-		-	-						
Mov Cap-1 Maneuver	548	-	-	678	-	-	146	98	641	119	93	524
Mov Cap-2 Maneuver	-	-	-	-	-	-	146	98	-	119	93	-
Stage 1	-	-	-	-	-	-	413	454	-	270	328	-
Stage 2	-	-	-	-	-	-	512	326	-	661	435	-

Approach	EB	WB	NB	SB
HCM Control Delay, s	0	0	10.7	12.1
HCM LOS			B	B

Minor Lane/Major Mvmt	NBLn1	EBL	EBT	EBR	WBL	WBT	WBR	SBLn1
Capacity (veh/h)	641	548	-	-	678	-	-	524
HCM Lane V/C Ratio	0.016	-	-	-	-	-	-	0.038
HCM Control Delay (s)	10.7	0	-	-	0	-	-	12.1
HCM Lane LOS	B	A	-	-	A	-	-	B
HCM 95th %tile Q(veh)	0	0	-	-	0	-	-	0.1

Movement	EBL	EBT	EBR	WBL	WBT	WBR	NBL	NBT	NBR	SBL	SBT	SBR
Lane Configurations												
Traffic Volume (vph)	30	600	30	20	910	30	40	10	20	30	10	30
Future Volume (vph)	30	600	30	20	910	30	40	10	20	30	10	30
Ideal Flow (vphpl)	2100	2100	2100	2100	2100	2100	2100	2100	2100	2100	2100	2100
Total Lost time (s)	4.0	4.0		4.0	4.0		4.0	4.0		4.0	4.0	
Lane Util. Factor	1.00	0.95		1.00	0.95		0.95	0.95		1.00	1.00	
Frt	1.00	0.99		1.00	1.00		1.00	0.91		1.00	0.89	
Flt Protected	0.95	1.00		0.95	1.00		0.95	0.99		0.95	1.00	
Satd. Flow (prot)	1523	3024		1435	2857		1858	1773		1956	1827	
Flt Permitted	0.28	1.00		0.41	1.00		0.73	0.97		0.73	1.00	
Satd. Flow (perm)	444	3024		624	2857		1430	1721		1511	1827	
Peak-hour factor, PHF	1.00	1.00	1.00	1.00	1.00	1.00	1.00	1.00	1.00	1.00	1.00	1.00
Adj. Flow (vph)	30	600	30	20	910	30	40	10	20	30	10	30
RTOR Reduction (vph)	0	6	0	0	4	0	0	16	0	0	24	0
Lane Group Flow (vph)	30	624	0	20	936	0	36	18	0	30	16	0
Heavy Vehicles (%)	31%	31%	31%	39%	39%	39%	2%	2%	2%	2%	2%	2%
Turn Type	Perm	NA		Perm	NA		Perm	NA		Perm	NA	
Protected Phases		4			8			2			6	
Permitted Phases	4			8			2			6		
Actuated Green, G (s)	16.9	16.9		16.9	16.9		6.5	6.5		6.5	6.5	
Effective Green, g (s)	16.9	16.9		16.9	16.9		6.5	6.5		6.5	6.5	
Actuated g/C Ratio	0.54	0.54		0.54	0.54		0.21	0.21		0.21	0.21	
Clearance Time (s)	4.0	4.0		4.0	4.0		4.0	4.0		4.0	4.0	
Vehicle Extension (s)	3.0	3.0		3.0	3.0		3.0	3.0		3.0	3.0	
Lane Grp Cap (vph)	238	1627		335	1537		296	356		312	378	
v/s Ratio Prot		0.21			c0.33						0.01	
v/s Ratio Perm	0.07			0.03			c0.03	0.01		0.02		
v/c Ratio	0.13	0.38		0.06	0.61		0.12	0.05		0.10	0.04	
Uniform Delay, d1	3.6	4.2		3.5	5.0		10.1	10.0		10.1	10.0	
Progression Factor	1.00	1.00		1.00	1.00		1.00	1.00		1.00	1.00	
Incremental Delay, d2	0.2	0.2		0.1	0.7		0.2	0.1		0.1	0.0	
Delay (s)	3.8	4.4		3.5	5.7		10.3	10.0		10.2	10.0	
Level of Service	A	A		A	A		B	B		B	B	
Approach Delay (s)		4.3			5.6			10.2			10.1	
Approach LOS		A			A			B			B	

Intersection Summary			
HCM 2000 Control Delay	5.5	HCM 2000 Level of Service	A
HCM 2000 Volume to Capacity ratio	0.47		
Actuated Cycle Length (s)	31.4	Sum of lost time (s)	8.0
Intersection Capacity Utilization	38.7%	ICU Level of Service	A
Analysis Period (min)	15		
c Critical Lane Group			

Movement	EBL	EBT	EBR	WBL	WBT	WBR	NBL	NBT	NBR	SBL	SBT	SBR
Lane Configurations												
Traffic Volume (veh/h)	0	640	10	0	940	10	0	0	10	0	0	10
Future Volume (Veh/h)	0	640	10	0	940	10	0	0	10	0	0	10
Sign Control		Free			Free			Stop			Stop	
Grade		0%			0%			0%			0%	
Peak Hour Factor	1.00	1.00	1.00	1.00	1.00	1.00	1.00	1.00	1.00	1.00	1.00	1.00
Hourly flow rate (vph)	0	640	10	0	940	10	0	0	10	0	0	10
Pedestrians												
Lane Width (ft)												
Walking Speed (ft/s)												
Percent Blockage												
Right turn flare (veh)												
Median type		None			None							
Median storage veh)												
Upstream signal (ft)												
pX, platoon unblocked												
vC, conflicting volume	950			650			1125	1595	325	1275	1595	475
vC1, stage 1 conf vol												
vC2, stage 2 conf vol												
vCu, unblocked vol	950			650			1125	1595	325	1275	1595	475
tC, single (s)	4.1			4.1			7.5	6.5	6.9	7.5	6.5	6.9
tC, 2 stage (s)												
tF (s)	2.2			2.2			3.5	4.0	3.3	3.5	4.0	3.3
p0 queue free %	100			100			100	100	99	100	100	98
cM capacity (veh/h)	719			932			157	106	671	122	106	536

Direction, Lane #	EB 1	EB 2	WB 1	WB 2	NB 1	SB 1
Volume Total	427	223	627	323	10	10
Volume Left	0	0	0	0	0	0
Volume Right	0	10	0	10	10	10
cSH	1700	1700	1700	1700	671	536
Volume to Capacity	0.25	0.13	0.37	0.19	0.01	0.02
Queue Length 95th (ft)	0	0	0	0	1	1
Control Delay (s)	0.0	0.0	0.0	0.0	10.4	11.8
Lane LOS					B	B
Approach Delay (s)	0.0		0.0		10.4	11.8
Approach LOS					B	B

Intersection Summary			
Average Delay	0.1		
Intersection Capacity Utilization	33.8%	ICU Level of Service	A
Analysis Period (min)	15		

Intersection	
Int Delay, s/veh	0.1

Movement	EBL	EBT	EBR	WBL	WBT	WBR	NBL	NBT	NBR	SBL	SBT	SBR
Traffic Vol, veh/h	0	640	10	0	940	10	0	0	10	0	0	10
Future Vol, veh/h	0	640	10	0	940	10	0	0	10	0	0	10
Conflicting Peds, #/hr	0	0	0	0	0	0	0	0	0	0	0	0
Sign Control	Free	Free	Free	Free	Free	Free	Stop	Stop	Stop	Stop	Stop	Stop
RT Channelized	-	-	None	-	-	None	-	-	None	-	-	None
Storage Length	-	-	-	-	-	-	-	-	0	-	-	0
Veh in Median Storage, #	-	0	-	-	0	-	-	0	-	-	0	-
Grade, %	-	0	-	-	0	-	-	0	-	-	0	-
Peak Hour Factor	100	100	100	100	100	100	100	100	100	100	100	100
Heavy Vehicles, %	2	2	2	2	2	2	2	2	2	2	2	2
Mvmt Flow	0	640	10	0	940	10	0	0	10	0	0	10

Major/Minor	Major1			Major2			Minor1			Minor2		
Conflicting Flow All	950	0	0	650	0	0	1115	1595	325	1265	1595	475
Stage 1	-	-	-	-	-	-	645	645	-	945	945	-
Stage 2	-	-	-	-	-	-	470	950	-	320	650	-
Critical Hdwy	4.14	-	-	4.14	-	-	7.54	6.54	6.94	7.54	6.54	6.94
Critical Hdwy Stg 1	-	-	-	-	-	-	6.54	5.54	-	6.54	5.54	-
Critical Hdwy Stg 2	-	-	-	-	-	-	6.54	5.54	-	6.54	5.54	-
Follow-up Hdwy	2.22	-	-	2.22	-	-	3.52	4.02	3.32	3.52	4.02	3.32
Pot Cap-1 Maneuver	719	-	-	932	-	-	163	106	671	126	106	536
Stage 1	-	-	-	-	-	-	427	466	-	282	339	-
Stage 2	-	-	-	-	-	-	543	337	-	666	463	-
Platoon blocked, %		-	-		-	-						
Mov Cap-1 Maneuver	719	-	-	932	-	-	160	106	671	124	106	536
Mov Cap-2 Maneuver	-	-	-	-	-	-	160	106	-	124	106	-
Stage 1	-	-	-	-	-	-	427	466	-	282	339	-
Stage 2	-	-	-	-	-	-	533	337	-	656	463	-

Approach	EB	WB	NB	SB
HCM Control Delay, s	0	0	10.4	11.8
HCM LOS			B	B

Minor Lane/Major Mvmt	NBLn1	EBL	EBT	EBR	WBL	WBT	WBR	SBLn1
Capacity (veh/h)	671	719	-	-	932	-	-	536
HCM Lane V/C Ratio	0.015	-	-	-	-	-	-	0.019
HCM Control Delay (s)	10.4	0	-	-	0	-	-	11.8
HCM Lane LOS	B	A	-	-	A	-	-	B
HCM 95th %tile Q(veh)	0	0	-	-	0	-	-	0.1

Movement	EBL	EBT	EBR	WBL	WBT	WBR	NBL	NBT	NBR	SBL	SBT	SBR
Lane Configurations												
Traffic Volume (veh/h)	0	640	10	0	920	10	0	0	10	0	0	20
Future Volume (Veh/h)	0	640	10	0	920	10	0	0	10	0	0	20
Sign Control		Free			Free			Stop			Stop	
Grade		0%			0%			0%			0%	
Peak Hour Factor	1.00	1.00	1.00	1.00	1.00	1.00	1.00	1.00	1.00	1.00	1.00	1.00
Hourly flow rate (vph)	0	640	10	0	920	10	0	0	10	0	0	20
Pedestrians												
Lane Width (ft)												
Walking Speed (ft/s)												
Percent Blockage												
Right turn flare (veh)												
Median type		None			None							
Median storage veh)												
Upstream signal (ft)												
pX, platoon unblocked												
vC, conflicting volume	930			650			1125	1575	325	1255	1575	465
vC1, stage 1 conf vol												
vC2, stage 2 conf vol												
vCu, unblocked vol	930			650			1125	1575	325	1255	1575	465
tC, single (s)	4.1			4.1			7.5	6.5	6.9	7.5	6.5	6.9
tC, 2 stage (s)												
tF (s)	2.2			2.2			3.5	4.0	3.3	3.5	4.0	3.3
p0 queue free %	100			100			100	100	99	100	100	96
cM capacity (veh/h)	731			932			154	109	671	126	109	544

Direction, Lane #	EB 1	EB 2	WB 1	WB 2	NB 1	SB 1
Volume Total	427	223	613	317	10	20
Volume Left	0	0	0	0	0	0
Volume Right	0	10	0	10	10	20
cSH	1700	1700	1700	1700	671	544
Volume to Capacity	0.25	0.13	0.36	0.19	0.01	0.04
Queue Length 95th (ft)	0	0	0	0	1	3
Control Delay (s)	0.0	0.0	0.0	0.0	10.4	11.9
Lane LOS					B	B
Approach Delay (s)	0.0		0.0		10.4	11.9
Approach LOS					B	B

Intersection Summary			
Average Delay	0.2		
Intersection Capacity Utilization	33.3%	ICU Level of Service	A
Analysis Period (min)	15		

Intersection	
Int Delay, s/veh	0.2

Movement	EBL	EBT	EBR	WBL	WBT	WBR	NBL	NBT	NBR	SBL	SBT	SBR
Traffic Vol, veh/h	0	640	10	0	920	10	0	0	10	0	0	20
Future Vol, veh/h	0	640	10	0	920	10	0	0	10	0	0	20
Conflicting Peds, #/hr	0	0	0	0	0	0	0	0	0	0	0	0
Sign Control	Free	Free	Free	Free	Free	Free	Stop	Stop	Stop	Stop	Stop	Stop
RT Channelized	-	-	None	-	-	None	-	-	None	-	-	None
Storage Length	-	-	-	-	-	-	-	-	0	-	-	0
Veh in Median Storage, #	-	0	-	-	0	-	-	0	-	-	0	-
Grade, %	-	0	-	-	0	-	-	0	-	-	0	-
Peak Hour Factor	100	100	100	100	100	100	100	100	100	100	100	100
Heavy Vehicles, %	2	2	2	2	2	2	2	2	2	2	2	2
Mvmt Flow	0	640	10	0	920	10	0	0	10	0	0	20

Major/Minor	Major1			Major2			Minor1			Minor2		
Conflicting Flow All	930	0	0	650	0	0	1105	1575	325	1245	1575	465
Stage 1	-	-	-	-	-	-	645	645	-	925	925	-
Stage 2	-	-	-	-	-	-	460	930	-	320	650	-
Critical Hdwy	4.14	-	-	4.14	-	-	7.54	6.54	6.94	7.54	6.54	6.94
Critical Hdwy Stg 1	-	-	-	-	-	-	6.54	5.54	-	6.54	5.54	-
Critical Hdwy Stg 2	-	-	-	-	-	-	6.54	5.54	-	6.54	5.54	-
Follow-up Hdwy	2.22	-	-	2.22	-	-	3.52	4.02	3.32	3.52	4.02	3.32
Pot Cap-1 Maneuver	731	-	-	932	-	-	165	109	671	130	109	544
Stage 1	-	-	-	-	-	-	427	466	-	290	346	-
Stage 2	-	-	-	-	-	-	551	344	-	666	463	-
Platoon blocked, %		-	-		-	-						
Mov Cap-1 Maneuver	731	-	-	932	-	-	159	109	671	128	109	544
Mov Cap-2 Maneuver	-	-	-	-	-	-	159	109	-	128	109	-
Stage 1	-	-	-	-	-	-	427	466	-	290	346	-
Stage 2	-	-	-	-	-	-	531	344	-	656	463	-

Approach	EB	WB	NB	SB
HCM Control Delay, s	0	0	10.4	11.9
HCM LOS			B	B

Minor Lane/Major Mvmt	NBLn1	EBL	EBT	EBR	WBL	WBT	WBR	SBLn1
Capacity (veh/h)	671	731	-	-	932	-	-	544
HCM Lane V/C Ratio	0.015	-	-	-	-	-	-	0.037
HCM Control Delay (s)	10.4	0	-	-	0	-	-	11.9
HCM Lane LOS	B	A	-	-	A	-	-	B
HCM 95th %tile Q(veh)	0	0	-	-	0	-	-	0.1

Movement	EBL	EBT	EBR	WBL	WBT	WBR	NBL	NBT	NBR	SBL	SBT	SBR
Lane Configurations												
Traffic Volume (veh/h)	0	650	10	0	930	10	0	0	10	0	0	10
Future Volume (Veh/h)	0	650	10	0	930	10	0	0	10	0	0	10
Sign Control		Free			Free			Stop			Stop	
Grade		0%			0%			0%			0%	
Peak Hour Factor	1.00	1.00	1.00	1.00	1.00	1.00	1.00	1.00	1.00	1.00	1.00	1.00
Hourly flow rate (vph)	0	650	10	0	930	10	0	0	10	0	0	10
Pedestrians												
Lane Width (ft)												
Walking Speed (ft/s)												
Percent Blockage												
Right turn flare (veh)												
Median type		None			None							
Median storage veh)												
Upstream signal (ft)												
pX, platoon unblocked												
vC, conflicting volume	940			660			1130	1595	330	1270	1595	470
vC1, stage 1 conf vol												
vC2, stage 2 conf vol												
vCu, unblocked vol	940			660			1130	1595	330	1270	1595	470
tC, single (s)	4.1			4.1			7.5	6.5	6.9	7.5	6.5	6.9
tC, 2 stage (s)												
tF (s)	2.2			2.2			3.5	4.0	3.3	3.5	4.0	3.3
p0 queue free %	100			100			100	100	98	100	100	98
cM capacity (veh/h)	725			924			156	106	666	123	106	540

Direction, Lane #	EB 1	EB 2	WB 1	WB 2	NB 1	SB 1
Volume Total	433	227	620	320	10	10
Volume Left	0	0	0	0	0	0
Volume Right	0	10	0	10	10	10
cSH	1700	1700	1700	1700	666	540
Volume to Capacity	0.25	0.13	0.36	0.19	0.02	0.02
Queue Length 95th (ft)	0	0	0	0	1	1
Control Delay (s)	0.0	0.0	0.0	0.0	10.5	11.8
Lane LOS					B	B
Approach Delay (s)	0.0		0.0		10.5	11.8
Approach LOS					B	B

Intersection Summary			
Average Delay	0.1		
Intersection Capacity Utilization	33.5%	ICU Level of Service	A
Analysis Period (min)	15		

Intersection	
Int Delay, s/veh	0.1

Movement	EBL	EBT	EBR	WBL	WBT	WBR	NBL	NBT	NBR	SBL	SBT	SBR
Traffic Vol, veh/h	0	650	10	0	930	10	0	0	10	0	0	10
Future Vol, veh/h	0	650	10	0	930	10	0	0	10	0	0	10
Conflicting Peds, #/hr	0	0	0	0	0	0	0	0	0	0	0	0
Sign Control	Free	Free	Free	Free	Free	Free	Stop	Stop	Stop	Stop	Stop	Stop
RT Channelized	-	-	None	-	-	None	-	-	None	-	-	None
Storage Length	-	-	-	-	-	-	-	-	0	-	-	0
Veh in Median Storage, #	-	0	-	-	0	-	-	0	-	-	0	-
Grade, %	-	0	-	-	0	-	-	0	-	-	0	-
Peak Hour Factor	100	100	100	100	100	100	100	100	100	100	100	100
Heavy Vehicles, %	2	2	2	2	2	2	2	2	2	2	2	2
Mvmt Flow	0	650	10	0	930	10	0	0	10	0	0	10

Major/Minor	Major1			Major2			Minor1			Minor2		
Conflicting Flow All	940	0	0	660	0	0	1120	1595	330	1260	1595	470
Stage 1	-	-	-	-	-	-	655	655	-	935	935	-
Stage 2	-	-	-	-	-	-	465	940	-	325	660	-
Critical Hdwy	4.14	-	-	4.14	-	-	7.54	6.54	6.94	7.54	6.54	6.94
Critical Hdwy Stg 1	-	-	-	-	-	-	6.54	5.54	-	6.54	5.54	-
Critical Hdwy Stg 2	-	-	-	-	-	-	6.54	5.54	-	6.54	5.54	-
Follow-up Hdwy	2.22	-	-	2.22	-	-	3.52	4.02	3.32	3.52	4.02	3.32
Pot Cap-1 Maneuver	725	-	-	924	-	-	161	106	666	127	106	540
Stage 1	-	-	-	-	-	-	421	461	-	285	342	-
Stage 2	-	-	-	-	-	-	547	340	-	661	458	-
Platoon blocked, %		-	-		-	-						
Mov Cap-1 Maneuver	725	-	-	924	-	-	158	106	666	125	106	540
Mov Cap-2 Maneuver	-	-	-	-	-	-	158	106	-	125	106	-
Stage 1	-	-	-	-	-	-	421	461	-	285	342	-
Stage 2	-	-	-	-	-	-	537	340	-	651	458	-

Approach	EB	WB	NB	SB
HCM Control Delay, s	0	0	10.5	11.8
HCM LOS			B	B

Minor Lane/Major Mvmt	NBLn1	EBL	EBT	EBR	WBL	WBT	WBR	SBLn1
Capacity (veh/h)	666	725	-	-	924	-	-	540
HCM Lane V/C Ratio	0.015	-	-	-	-	-	-	0.019
HCM Control Delay (s)	10.5	0	-	-	0	-	-	11.8
HCM Lane LOS	B	A	-	-	A	-	-	B
HCM 95th %tile Q(veh)	0	0	-	-	0	-	-	0.1

Movement	EBL	EBT	EBR	WBL	WBT	WBR	NBL	NBT	NBR	SBL	SBT	SBR
Lane Configurations												
Traffic Volume (veh/h)	0	640	10	0	920	10	0	0	10	0	0	10
Future Volume (Veh/h)	0	640	10	0	920	10	0	0	10	0	0	10
Sign Control		Free			Free			Stop			Stop	
Grade		0%			0%			0%			0%	
Peak Hour Factor	1.00	1.00	1.00	1.00	1.00	1.00	1.00	1.00	1.00	1.00	1.00	1.00
Hourly flow rate (vph)	0	640	10	0	920	10	0	0	10	0	0	10
Pedestrians												
Lane Width (ft)												
Walking Speed (ft/s)												
Percent Blockage												
Right turn flare (veh)												
Median type		None			None							
Median storage veh)												
Upstream signal (ft)												
pX, platoon unblocked												
vC, conflicting volume	930			650			1115	1575	325	1255	1575	465
vC1, stage 1 conf vol												
vC2, stage 2 conf vol												
vCu, unblocked vol	930			650			1115	1575	325	1255	1575	465
tC, single (s)	4.7			4.8			7.5	6.5	6.9	7.5	6.5	6.9
tC, 2 stage (s)												
tF (s)	2.5			2.6			3.5	4.0	3.3	3.5	4.0	3.3
p0 queue free %	100			100			100	100	99	100	100	98
cM capacity (veh/h)	585			736			160	109	671	126	109	544

Direction, Lane #	EB 1	EB 2	WB 1	WB 2	NB 1	SB 1
Volume Total	427	223	613	317	10	10
Volume Left	0	0	0	0	0	0
Volume Right	0	10	0	10	10	10
cSH	1700	1700	1700	1700	671	544
Volume to Capacity	0.25	0.13	0.36	0.19	0.01	0.02
Queue Length 95th (ft)	0	0	0	0	1	1
Control Delay (s)	0.0	0.0	0.0	0.0	10.4	11.7
Lane LOS					B	B
Approach Delay (s)	0.0		0.0		10.4	11.7
Approach LOS					B	B

Intersection Summary			
Average Delay	0.1		
Intersection Capacity Utilization	33.3%	ICU Level of Service	A
Analysis Period (min)	15		

Intersection	
Int Delay, s/veh	0.1

Movement	EBL	EBT	EBR	WBL	WBT	WBR	NBL	NBT	NBR	SBL	SBT	SBR
Traffic Vol, veh/h	0	640	10	0	920	10	0	0	10	0	0	10
Future Vol, veh/h	0	640	10	0	920	10	0	0	10	0	0	10
Conflicting Peds, #/hr	0	0	0	0	0	0	0	0	0	0	0	0
Sign Control	Free	Free	Free	Free	Free	Free	Stop	Stop	Stop	Stop	Stop	Stop
RT Channelized	-	-	None	-	-	None	-	-	None	-	-	None
Storage Length	-	-	-	-	-	-	-	-	0	-	-	0
Veh in Median Storage, #	-	0	-	-	0	-	-	0	-	-	0	-
Grade, %	-	0	-	-	0	-	-	0	-	-	0	-
Peak Hour Factor	100	100	100	100	100	100	100	100	100	100	100	100
Heavy Vehicles, %	29	29	29	36	36	36	2	2	2	2	2	2
Mvmt Flow	0	640	10	0	920	10	0	0	10	0	0	10

Major/Minor	Major1			Major2			Minor1			Minor2		
Conflicting Flow All	930	0	0	650	0	0	1105	1575	325	1245	1575	465
Stage 1	-	-	-	-	-	-	645	645	-	925	925	-
Stage 2	-	-	-	-	-	-	460	930	-	320	650	-
Critical Hdwy	4.68	-	-	4.82	-	-	7.54	6.54	6.94	7.54	6.54	6.94
Critical Hdwy Stg 1	-	-	-	-	-	-	6.54	5.54	-	6.54	5.54	-
Critical Hdwy Stg 2	-	-	-	-	-	-	6.54	5.54	-	6.54	5.54	-
Follow-up Hdwy	2.49	-	-	2.56	-	-	3.52	4.02	3.32	3.52	4.02	3.32
Pot Cap-1 Maneuver	585	-	-	736	-	-	165	109	671	130	109	544
Stage 1	-	-	-	-	-	-	427	466	-	290	346	-
Stage 2	-	-	-	-	-	-	551	344	-	666	463	-
Platoon blocked, %		-	-		-	-						
Mov Cap-1 Maneuver	585	-	-	736	-	-	162	109	671	128	109	544
Mov Cap-2 Maneuver	-	-	-	-	-	-	162	109	-	128	109	-
Stage 1	-	-	-	-	-	-	427	466	-	290	346	-
Stage 2	-	-	-	-	-	-	541	344	-	656	463	-

Approach	EB	WB	NB	SB
HCM Control Delay, s	0	0	10.4	11.7
HCM LOS			B	B

Minor Lane/Major Mvmt	NBLn1	EBL	EBT	EBR	WBL	WBT	WBR	SBLn1
Capacity (veh/h)	671	585	-	-	736	-	-	544
HCM Lane V/C Ratio	0.015	-	-	-	-	-	-	0.018
HCM Control Delay (s)	10.4	0	-	-	0	-	-	11.7
HCM Lane LOS	B	A	-	-	A	-	-	B
HCM 95th %tile Q(veh)	0	0	-	-	0	-	-	0.1

Movement	EBL	EBT	EBR	WBL	WBT	WBR	NBL	NBT	NBR	SBL	SBT	SBR
Lane Configurations												
Traffic Volume (vph)	40	600	20	50	800	20	30	20	20	60	30	100
Future Volume (vph)	40	600	20	50	800	20	30	20	20	60	30	100
Ideal Flow (vphpl)	2100	2100	2100	2100	2100	2100	2100	2100	2100	2100	2100	2100
Total Lost time (s)	4.0	4.0	4.0	4.0	4.0	4.0	4.0	4.0		4.0	4.0	
Lane Util. Factor	0.97	0.95	1.00	1.00	0.95	1.00	1.00	1.00		1.00	1.00	
Frt	1.00	1.00	0.85	1.00	1.00	0.85	1.00	0.93		1.00	0.88	
Flt Protected	0.95	1.00	1.00	0.95	1.00	1.00	0.95	1.00		0.95	1.00	
Satd. Flow (prot)	3000	3093	1384	1467	2934	1312	1956	1904		1956	1821	
Flt Permitted	0.95	1.00	1.00	0.95	1.00	1.00	0.67	1.00		0.73	1.00	
Satd. Flow (perm)	3000	3093	1384	1467	2934	1312	1387	1904		1505	1821	
Peak-hour factor, PHF	1.00	1.00	1.00	1.00	1.00	1.00	1.00	1.00	1.00	1.00	1.00	1.00
Adj. Flow (vph)	40	600	20	50	800	20	30	20	20	60	30	100
RTOR Reduction (vph)	0	0	13	0	0	12	0	13	0	0	65	0
Lane Group Flow (vph)	40	600	7	50	800	8	30	27	0	60	65	0
Heavy Vehicles (%)	29%	29%	29%	36%	36%	36%	2%	2%	2%	2%	2%	2%
Turn Type	Prot	NA	Perm	Prot	NA	Perm	Perm	NA		Perm	NA	
Protected Phases	7	4		3	8			2			6	
Permitted Phases			4			8	2			6		
Actuated Green, G (s)	1.9	18.8	18.8	2.9	19.8	19.8	17.8	17.8		17.8	17.8	
Effective Green, g (s)	1.9	18.8	18.8	2.9	19.8	19.8	17.8	17.8		17.8	17.8	
Actuated g/C Ratio	0.04	0.37	0.37	0.06	0.38	0.38	0.35	0.35		0.35	0.35	
Clearance Time (s)	4.0	4.0	4.0	4.0	4.0	4.0	4.0	4.0		4.0	4.0	
Vehicle Extension (s)	3.0	3.0	3.0	3.0	3.0	3.0	3.0	3.0		3.0	3.0	
Lane Grp Cap (vph)	110	1129	505	82	1128	504	479	658		520	629	
v/s Ratio Prot	0.01	0.19		c0.03	c0.27			0.01			0.04	
v/s Ratio Perm			0.01			0.01	0.02			c0.04		
v/c Ratio	0.36	0.53	0.01	0.61	0.71	0.02	0.06	0.04		0.12	0.10	
Uniform Delay, d1	24.2	12.9	10.4	23.7	13.4	9.8	11.3	11.2		11.5	11.4	
Progression Factor	1.00	1.00	1.00	1.00	1.00	1.00	1.00	1.00		1.00	1.00	
Incremental Delay, d2	2.0	0.5	0.0	12.2	2.1	0.0	0.3	0.1		0.5	0.3	
Delay (s)	26.3	13.4	10.4	35.9	15.5	9.8	11.5	11.3		11.9	11.8	
Level of Service	C	B	B	D	B	A	B	B		B	B	
Approach Delay (s)		14.1			16.5			11.4			11.8	
Approach LOS		B			B			B			B	

Intersection Summary			
HCM 2000 Control Delay	14.9	HCM 2000 Level of Service	B
HCM 2000 Volume to Capacity ratio	0.45		
Actuated Cycle Length (s)	51.5	Sum of lost time (s)	12.0
Intersection Capacity Utilization	47.0%	ICU Level of Service	A
Analysis Period (min)	15		
c Critical Lane Group			

Movement	EBL	EBT	EBR	WBL	WBT	WBR	NBL	NBT	NBR	SBL	SBT	SBR
Lane Configurations												
Traffic Volume (veh/h)	0	570	120	0	810	10	0	0	10	0	0	50
Future Volume (Veh/h)	0	570	120	0	810	10	0	0	10	0	0	50
Sign Control		Free			Free			Stop			Stop	
Grade		0%			0%			0%			0%	
Peak Hour Factor	1.00	1.00	1.00	1.00	1.00	1.00	1.00	1.00	1.00	1.00	1.00	1.00
Hourly flow rate (vph)	0	570	120	0	810	10	0	0	10	0	0	50
Pedestrians												
Lane Width (ft)												
Walking Speed (ft/s)												
Percent Blockage												
Right turn flare (veh)												
Median type		None			None							
Median storage veh)												
Upstream signal (ft)												
pX, platoon unblocked												
vC, conflicting volume	820			690			1085	1450	345	1110	1505	410
vC1, stage 1 conf vol												
vC2, stage 2 conf vol												
vCu, unblocked vol	820			690			1085	1450	345	1110	1505	410
tC, single (s)	4.6			4.8			7.5	6.5	6.9	7.5	6.5	6.9
tC, 2 stage (s)												
tF (s)	2.5			2.6			3.5	4.0	3.3	3.5	4.0	3.3
p0 queue free %	100			100			100	100	98	100	100	92
cM capacity (veh/h)	667			706			157	130	651	161	120	591

Direction, Lane #	EB 1	EB 2	WB 1	WB 2	NB 1	SB 1
Volume Total	380	310	540	280	10	50
Volume Left	0	0	0	0	0	0
Volume Right	0	120	0	10	10	50
cSH	1700	1700	1700	1700	651	591
Volume to Capacity	0.22	0.18	0.32	0.16	0.02	0.08
Queue Length 95th (ft)	0	0	0	0	1	7
Control Delay (s)	0.0	0.0	0.0	0.0	10.6	11.7
Lane LOS					B	B
Approach Delay (s)	0.0		0.0		10.6	11.7
Approach LOS					B	B

Intersection Summary			
Average Delay	0.4		
Intersection Capacity Utilization	30.5%	ICU Level of Service	A
Analysis Period (min)	15		

Intersection	
Int Delay, s/veh	0.4

Movement	EBL	EBT	EBR	WBL	WBT	WBR	NBL	NBT	NBR	SBL	SBT	SBR
Traffic Vol, veh/h	0	570	120	0	810	10	0	0	10	0	0	50
Future Vol, veh/h	0	570	120	0	810	10	0	0	10	0	0	50
Conflicting Peds, #/hr	0	0	0	0	0	0	0	0	0	0	0	0
Sign Control	Free	Free	Free	Free	Free	Free	Stop	Stop	Stop	Stop	Stop	Stop
RT Channelized	-	-	None	-	-	None	-	-	None	-	-	None
Storage Length	-	-	-	-	-	-	-	-	0	-	-	0
Veh in Median Storage, #	-	0	-	-	0	-	-	0	-	-	0	-
Grade, %	-	0	-	-	0	-	-	0	-	-	0	-
Peak Hour Factor	100	100	100	100	100	100	100	100	100	100	100	100
Heavy Vehicles, %	26	26	26	36	36	36	2	2	2	2	2	2
Mvmt Flow	0	570	120	0	810	10	0	0	10	0	0	50

Major/Minor	Major1			Major2			Minor1			Minor2		
Conflicting Flow All	820	0	0	690	0	0	1035	1450	345	1100	1505	410
Stage 1	-	-	-	-	-	-	630	630	-	815	815	-
Stage 2	-	-	-	-	-	-	405	820	-	285	690	-
Critical Hdwy	4.62	-	-	4.82	-	-	7.54	6.54	6.94	7.54	6.54	6.94
Critical Hdwy Stg 1	-	-	-	-	-	-	6.54	5.54	-	6.54	5.54	-
Critical Hdwy Stg 2	-	-	-	-	-	-	6.54	5.54	-	6.54	5.54	-
Follow-up Hdwy	2.46	-	-	2.56	-	-	3.52	4.02	3.32	3.52	4.02	3.32
Pot Cap-1 Maneuver	667	-	-	706	-	-	186	130	651	167	120	591
Stage 1	-	-	-	-	-	-	436	473	-	338	389	-
Stage 2	-	-	-	-	-	-	593	387	-	698	444	-
Platoon blocked, %		-	-		-	-						
Mov Cap-1 Maneuver	667	-	-	706	-	-	170	130	651	164	120	591
Mov Cap-2 Maneuver	-	-	-	-	-	-	170	130	-	164	120	-
Stage 1	-	-	-	-	-	-	436	473	-	338	389	-
Stage 2	-	-	-	-	-	-	543	387	-	687	444	-

Approach	EB	WB	NB	SB
HCM Control Delay, s	0	0	10.6	11.7
HCM LOS			B	B

Minor Lane/Major Mvmt	NBLn1	EBL	EBT	EBR	WBL	WBT	WBR	SBLn1
Capacity (veh/h)	651	667	-	-	706	-	-	591
HCM Lane V/C Ratio	0.015	-	-	-	-	-	-	0.085
HCM Control Delay (s)	10.6	0	-	-	0	-	-	11.7
HCM Lane LOS	B	A	-	-	A	-	-	B
HCM 95th %tile Q(veh)	0	0	-	-	0	-	-	0.3

Movement	EBL	EBT	EBR	WBL	WBT	WBR	NBL	NBT	NBR	SBL	SBT	SBR
Lane Configurations												
Traffic Volume (veh/h)	0	570	10	0	810	10	0	0	10	0	0	10
Future Volume (Veh/h)	0	570	10	0	810	10	0	0	10	0	0	10
Sign Control		Free			Free			Stop			Stop	
Grade		0%			0%			0%			0%	
Peak Hour Factor	1.00	1.00	1.00	1.00	1.00	1.00	1.00	1.00	1.00	1.00	1.00	1.00
Hourly flow rate (vph)	0	570	10	0	810	10	0	0	10	0	0	10
Pedestrians												
Lane Width (ft)												
Walking Speed (ft/s)												
Percent Blockage												
Right turn flare (veh)												
Median type		None			None							
Median storage veh)												
Upstream signal (ft)												
pX, platoon unblocked												
vC, conflicting volume	820			580			990	1395	290	1110	1395	410
vC1, stage 1 conf vol												
vC2, stage 2 conf vol												
vCu, unblocked vol	820			580			990	1395	290	1110	1395	410
tC, single (s)	4.6			4.8			7.5	6.5	6.9	7.5	6.5	6.9
tC, 2 stage (s)												
tF (s)	2.5			2.6			3.5	4.0	3.3	3.5	4.0	3.3
p0 queue free %	100			100			100	100	99	100	100	98
cM capacity (veh/h)	667			789			197	140	707	162	140	591

Direction, Lane #	EB 1	EB 2	WB 1	WB 2	NB 1	SB 1
Volume Total	380	200	540	280	10	10
Volume Left	0	0	0	0	0	0
Volume Right	0	10	0	10	10	10
cSH	1700	1700	1700	1700	707	591
Volume to Capacity	0.22	0.12	0.32	0.16	0.01	0.02
Queue Length 95th (ft)	0	0	0	0	1	1
Control Delay (s)	0.0	0.0	0.0	0.0	10.2	11.2
Lane LOS					B	B
Approach Delay (s)	0.0		0.0		10.2	11.2
Approach LOS					B	B

Intersection Summary			
Average Delay	0.2		
Intersection Capacity Utilization	30.5%	ICU Level of Service	A
Analysis Period (min)	15		

Intersection	
Int Delay, s/veh	0.2

Movement	EBL	EBT	EBR	WBL	WBT	WBR	NBL	NBT	NBR	SBL	SBT	SBR
Traffic Vol, veh/h	0	570	10	0	810	10	0	0	10	0	0	10
Future Vol, veh/h	0	570	10	0	810	10	0	0	10	0	0	10
Conflicting Peds, #/hr	0	0	0	0	0	0	0	0	0	0	0	0
Sign Control	Free	Free	Free	Free	Free	Free	Stop	Stop	Stop	Stop	Stop	Stop
RT Channelized	-	-	None	-	-	None	-	-	None	-	-	None
Storage Length	-	-	-	-	-	-	-	-	0	-	-	0
Veh in Median Storage, #	-	0	-	-	0	-	-	0	-	-	0	-
Grade, %	-	0	-	-	0	-	-	0	-	-	0	-
Peak Hour Factor	100	100	100	100	100	100	100	100	100	100	100	100
Heavy Vehicles, %	26	26	26	36	36	36	2	2	2	2	2	2
Mvmt Flow	0	570	10	0	810	10	0	0	10	0	0	10

Major/Minor	Major1			Major2			Minor1			Minor2		
Conflicting Flow All	820	0	0	580	0	0	980	1395	290	1100	1395	410
Stage 1	-	-	-	-	-	-	575	575	-	815	815	-
Stage 2	-	-	-	-	-	-	405	820	-	285	580	-
Critical Hdwy	4.62	-	-	4.82	-	-	7.54	6.54	6.94	7.54	6.54	6.94
Critical Hdwy Stg 1	-	-	-	-	-	-	6.54	5.54	-	6.54	5.54	-
Critical Hdwy Stg 2	-	-	-	-	-	-	6.54	5.54	-	6.54	5.54	-
Follow-up Hdwy	2.46	-	-	2.56	-	-	3.52	4.02	3.32	3.52	4.02	3.32
Pot Cap-1 Maneuver	667	-	-	789	-	-	204	140	707	167	140	591
Stage 1	-	-	-	-	-	-	470	501	-	338	389	-
Stage 2	-	-	-	-	-	-	593	387	-	698	498	-
Platoon blocked, %		-	-		-	-						
Mov Cap-1 Maneuver	667	-	-	789	-	-	201	140	707	165	140	591
Mov Cap-2 Maneuver	-	-	-	-	-	-	201	140	-	165	140	-
Stage 1	-	-	-	-	-	-	470	501	-	338	389	-
Stage 2	-	-	-	-	-	-	583	387	-	688	498	-

Approach	EB	WB	NB	SB
HCM Control Delay, s	0	0	10.2	11.2
HCM LOS			B	B

Minor Lane/Major Mvmt	NBLn1	EBL	EBT	EBR	WBL	WBT	WBR	SBLn1
Capacity (veh/h)	707	667	-	-	789	-	-	591
HCM Lane V/C Ratio	0.014	-	-	-	-	-	-	0.017
HCM Control Delay (s)	10.2	0	-	-	0	-	-	11.2
HCM Lane LOS	B	A	-	-	A	-	-	B
HCM 95th %tile Q(veh)	0	0	-	-	0	-	-	0.1

Movement	EBL	EBT	EBR	WBL	WBT	WBR	NBL	NBT	NBR	SBL	SBT	SBR
Lane Configurations												
Traffic Volume (vph)	20	560	30	10	730	10	50	30	10	30	60	40
Future Volume (vph)	20	560	30	10	730	10	50	30	10	30	60	40
Ideal Flow (vphpl)	2100	2100	2100	2100	2100	2100	2100	2100	2100	2100	2100	2100
Total Lost time (s)	4.0	4.0	4.0	4.0	4.0	4.0	4.0	4.0		4.0	4.0	4.0
Lane Util. Factor	1.00	0.95	1.00	1.00	0.95	1.00	1.00	1.00		1.00	1.00	1.00
Frt	1.00	1.00	0.85	1.00	1.00	0.85	1.00	0.96		1.00	1.00	0.85
Flt Protected	0.95	1.00	1.00	0.95	1.00	1.00	0.95	1.00		0.95	1.00	1.00
Satd. Flow (prot)	1583	3167	1417	1467	2934	1312	1956	1982		1956	2059	1750
Flt Permitted	0.95	1.00	1.00	0.95	1.00	1.00	0.72	1.00		0.73	1.00	1.00
Satd. Flow (perm)	1583	3167	1417	1467	2934	1312	1478	1982		1505	2059	1750
Peak-hour factor, PHF	1.00	1.00	1.00	1.00	1.00	1.00	1.00	1.00	1.00	1.00	1.00	1.00
Adj. Flow (vph)	20	560	30	10	730	10	50	30	10	30	60	40
RTOR Reduction (vph)	0	0	19	0	0	6	0	6	0	0	0	25
Lane Group Flow (vph)	20	560	11	10	730	4	50	34	0	30	60	15
Heavy Vehicles (%)	26%	26%	26%	36%	36%	36%	2%	2%	2%	2%	2%	2%
Turn Type	Prot	NA	Perm	Prot	NA	Perm	Perm	NA		Perm	NA	Perm
Protected Phases	7	4		3	8			2			6	
Permitted Phases			4			8	2			6		6
Actuated Green, G (s)	0.6	16.2	16.2	0.6	16.2	16.2	16.5	16.5		16.5	16.5	16.5
Effective Green, g (s)	0.6	16.2	16.2	0.6	16.2	16.2	16.5	16.5		16.5	16.5	16.5
Actuated g/C Ratio	0.01	0.36	0.36	0.01	0.36	0.36	0.36	0.36		0.36	0.36	0.36
Clearance Time (s)	4.0	4.0	4.0	4.0	4.0	4.0	4.0	4.0		4.0	4.0	4.0
Vehicle Extension (s)	3.0	3.0	3.0	3.0	3.0	3.0	3.0	3.0		3.0	3.0	3.0
Lane Grp Cap (vph)	20	1132	506	19	1049	469	538	721		548	749	637
v/s Ratio Prot	c0.01	0.18		0.01	c0.25			0.02			0.03	
v/s Ratio Perm			0.01			0.00	c0.03			0.02		0.01
v/c Ratio	1.00	0.49	0.02	0.53	0.70	0.01	0.09	0.05		0.05	0.08	0.02
Uniform Delay, d1	22.3	11.4	9.4	22.2	12.4	9.4	9.5	9.3		9.3	9.4	9.2
Progression Factor	1.00	1.00	1.00	1.00	1.00	1.00	1.00	1.00		1.00	1.00	1.00
Incremental Delay, d2	201.2	0.3	0.0	23.9	2.0	0.0	0.3	0.1		0.2	0.2	0.1
Delay (s)	223.6	11.7	9.4	46.1	14.5	9.4	9.8	9.4		9.5	9.6	9.3
Level of Service	F	B	A	D	B	A	A	A		A	A	A
Approach Delay (s)		18.5			14.8			9.6			9.5	
Approach LOS		B			B			A			A	

Intersection Summary			
HCM 2000 Control Delay	15.5	HCM 2000 Level of Service	B
HCM 2000 Volume to Capacity ratio	0.40		
Actuated Cycle Length (s)	45.3	Sum of lost time (s)	12.0
Intersection Capacity Utilization	34.9%	ICU Level of Service	A
Analysis Period (min)	15		
c Critical Lane Group			

Movement	EBL	EBT	EBR	WBL	WBT	WBR	NBL	NBT	NBR	SBL	SBT	SBR
Lane Configurations												
Traffic Volume (veh/h)	0	580	10	0	730	20	0	0	10	0	0	10
Future Volume (Veh/h)	0	580	10	0	730	20	0	0	10	0	0	10
Sign Control		Free			Free			Stop			Stop	
Grade		0%			0%			0%			0%	
Peak Hour Factor	1.00	1.00	1.00	1.00	1.00	1.00	1.00	1.00	1.00	1.00	1.00	1.00
Hourly flow rate (vph)	0	580	10	0	730	20	0	0	10	0	0	10
Pedestrians												
Lane Width (ft)												
Walking Speed (ft/s)												
Percent Blockage												
Right turn flare (veh)												
Median type		None			None							
Median storage veh)												
Upstream signal (ft)												
pX, platoon unblocked												
vC, conflicting volume	750			590			960	1335	295	1040	1330	375
vC1, stage 1 conf vol												
vC2, stage 2 conf vol												
vCu, unblocked vol	750			590			960	1335	295	1040	1330	375
tC, single (s)	4.1			4.1			7.5	6.5	6.9	7.5	6.5	6.9
tC, 2 stage (s)												
tF (s)	2.2			2.2			3.5	4.0	3.3	3.5	4.0	3.3
p0 queue free %	100			100			100	100	99	100	100	98
cM capacity (veh/h)	855			982			208	152	701	182	153	623

Direction, Lane #	EB 1	EB 2	WB 1	WB 2	NB 1	SB 1
Volume Total	387	203	487	263	10	10
Volume Left	0	0	0	0	0	0
Volume Right	0	10	0	20	10	10
cSH	1700	1700	1700	1700	701	623
Volume to Capacity	0.23	0.12	0.29	0.15	0.01	0.02
Queue Length 95th (ft)	0	0	0	0	1	1
Control Delay (s)	0.0	0.0	0.0	0.0	10.2	10.9
Lane LOS					B	B
Approach Delay (s)	0.0		0.0		10.2	10.9
Approach LOS					B	B

Intersection Summary			
Average Delay	0.2		
Intersection Capacity Utilization	28.8%	ICU Level of Service	A
Analysis Period (min)	15		

Intersection	
Int Delay, s/veh	0.2

Movement	EBL	EBT	EBR	WBL	WBT	WBR	NBL	NBT	NBR	SBL	SBT	SBR
Traffic Vol, veh/h	0	580	10	0	730	20	0	0	10	0	0	10
Future Vol, veh/h	0	580	10	0	730	20	0	0	10	0	0	10
Conflicting Peds, #/hr	0	0	0	0	0	0	0	0	0	0	0	0
Sign Control	Free	Free	Free	Free	Free	Free	Stop	Stop	Stop	Stop	Stop	Stop
RT Channelized	-	-	None	-	-	None	-	-	None	-	-	None
Storage Length	-	-	-	-	-	-	-	-	0	-	-	0
Veh in Median Storage, #	-	0	-	-	0	-	-	0	-	-	0	-
Grade, %	-	0	-	-	0	-	-	0	-	-	0	-
Peak Hour Factor	100	100	100	100	100	100	100	100	100	100	100	100
Heavy Vehicles, %	2	2	2	2	2	2	2	2	2	2	2	2
Mvmt Flow	0	580	10	0	730	20	0	0	10	0	0	10

Major/Minor	Major1			Major2			Minor1			Minor2		
Conflicting Flow All	750	0	0	590	0	0	950	1335	295	1030	1330	375
Stage 1	-	-	-	-	-	-	585	585	-	740	740	-
Stage 2	-	-	-	-	-	-	365	750	-	290	590	-
Critical Hdwy	4.14	-	-	4.14	-	-	7.54	6.54	6.94	7.54	6.54	6.94
Critical Hdwy Stg 1	-	-	-	-	-	-	6.54	5.54	-	6.54	5.54	-
Critical Hdwy Stg 2	-	-	-	-	-	-	6.54	5.54	-	6.54	5.54	-
Follow-up Hdwy	2.22	-	-	2.22	-	-	3.52	4.02	3.32	3.52	4.02	3.32
Pot Cap-1 Maneuver	855	-	-	982	-	-	215	152	701	188	153	623
Stage 1	-	-	-	-	-	-	464	496	-	375	421	-
Stage 2	-	-	-	-	-	-	627	417	-	694	493	-
Platoon blocked, %		-	-		-	-						
Mov Cap-1 Maneuver	855	-	-	982	-	-	212	152	701	185	153	623
Mov Cap-2 Maneuver	-	-	-	-	-	-	212	152	-	185	153	-
Stage 1	-	-	-	-	-	-	464	496	-	375	421	-
Stage 2	-	-	-	-	-	-	617	417	-	684	493	-

Approach	EB	WB	NB	SB
HCM Control Delay, s	0	0	10.2	10.9
HCM LOS			B	B

Minor Lane/Major Mvmt	NBLn1	EBL	EBT	EBR	WBL	WBT	WBR	SBLn1
Capacity (veh/h)	701	855	-	-	982	-	-	623
HCM Lane V/C Ratio	0.014	-	-	-	-	-	-	0.016
HCM Control Delay (s)	10.2	0	-	-	0	-	-	10.9
HCM Lane LOS	B	A	-	-	A	-	-	B
HCM 95th %tile Q(veh)	0	0	-	-	0	-	-	0

Movement	EBL	EBT	EBR	WBL	WBT	WBR	NBL	NBT	NBR	SBL	SBT	SBR
Lane Configurations												
Traffic Volume (veh/h)	0	580	10	0	730	10	0	0	10	0	0	10
Future Volume (Veh/h)	0	580	10	0	730	10	0	0	10	0	0	10
Sign Control		Free			Free			Stop			Stop	
Grade		0%			0%			0%			0%	
Peak Hour Factor	1.00	1.00	1.00	1.00	1.00	1.00	1.00	1.00	1.00	1.00	1.00	1.00
Hourly flow rate (vph)	0	580	10	0	730	10	0	0	10	0	0	10
Pedestrians												
Lane Width (ft)												
Walking Speed (ft/s)												
Percent Blockage												
Right turn flare (veh)												
Median type		None			None							
Median storage veh)												
Upstream signal (ft)												
pX, platoon unblocked												
vC, conflicting volume	740			590			960	1325	295	1035	1325	370
vC1, stage 1 conf vol												
vC2, stage 2 conf vol												
vCu, unblocked vol	740			590			960	1325	295	1035	1325	370
tC, single (s)	4.6			4.8			7.5	6.5	6.9	7.5	6.5	6.9
tC, 2 stage (s)												
tF (s)	2.5			2.6			3.5	4.0	3.3	3.5	4.0	3.3
p0 queue free %	100			100			100	100	99	100	100	98
cM capacity (veh/h)	721			781			208	155	701	183	155	627

Direction, Lane #	EB 1	EB 2	WB 1	WB 2	NB 1	SB 1
Volume Total	387	203	487	253	10	10
Volume Left	0	0	0	0	0	0
Volume Right	0	10	0	10	10	10
cSH	1700	1700	1700	1700	701	627
Volume to Capacity	0.23	0.12	0.29	0.15	0.01	0.02
Queue Length 95th (ft)	0	0	0	0	1	1
Control Delay (s)	0.0	0.0	0.0	0.0	10.2	10.8
Lane LOS					B	B
Approach Delay (s)	0.0		0.0		10.2	10.8
Approach LOS					B	B

Intersection Summary			
Average Delay	0.2		
Intersection Capacity Utilization	28.5%	ICU Level of Service	A
Analysis Period (min)	15		

Intersection	
Int Delay, s/veh	0.2

Movement	EBL	EBT	EBR	WBL	WBT	WBR	NBL	NBT	NBR	SBL	SBT	SBR
Traffic Vol, veh/h	0	580	10	0	730	10	0	0	10	0	0	10
Future Vol, veh/h	0	580	10	0	730	10	0	0	10	0	0	10
Conflicting Peds, #/hr	0	0	0	0	0	0	0	0	0	0	0	0
Sign Control	Free	Free	Free	Free	Free	Free	Stop	Stop	Stop	Stop	Stop	Stop
RT Channelized	-	-	None	-	-	None	-	-	None	-	-	None
Storage Length	-	-	-	-	-	-	-	-	0	-	-	0
Veh in Median Storage, #	-	0	-	-	0	-	-	0	-	-	0	-
Grade, %	-	0	-	-	0	-	-	0	-	-	0	-
Peak Hour Factor	100	100	100	100	100	100	100	100	100	100	100	100
Heavy Vehicles, %	26	26	26	36	36	36	2	2	2	2	2	2
Mvmt Flow	0	580	10	0	730	10	0	0	10	0	0	10

Major/Minor	Major1			Major2			Minor1			Minor2		
Conflicting Flow All	740	0	0	590	0	0	950	1325	295	1025	1325	370
Stage 1	-	-	-	-	-	-	585	585	-	735	735	-
Stage 2	-	-	-	-	-	-	365	740	-	290	590	-
Critical Hdwy	4.62	-	-	4.82	-	-	7.54	6.54	6.94	7.54	6.54	6.94
Critical Hdwy Stg 1	-	-	-	-	-	-	6.54	5.54	-	6.54	5.54	-
Critical Hdwy Stg 2	-	-	-	-	-	-	6.54	5.54	-	6.54	5.54	-
Follow-up Hdwy	2.46	-	-	2.56	-	-	3.52	4.02	3.32	3.52	4.02	3.32
Pot Cap-1 Maneuver	721	-	-	781	-	-	215	155	701	189	155	627
Stage 1	-	-	-	-	-	-	464	496	-	377	424	-
Stage 2	-	-	-	-	-	-	627	421	-	694	493	-
Platoon blocked, %		-	-		-	-						
Mov Cap-1 Maneuver	721	-	-	781	-	-	212	155	701	186	155	627
Mov Cap-2 Maneuver	-	-	-	-	-	-	212	155	-	186	155	-
Stage 1	-	-	-	-	-	-	464	496	-	377	424	-
Stage 2	-	-	-	-	-	-	617	421	-	684	493	-

Approach	EB	WB	NB	SB
HCM Control Delay, s	0	0	10.2	10.8
HCM LOS			B	B

Minor Lane/Major Mvmt	NBLn1	EBL	EBT	EBR	WBL	WBT	WBR	SBLn1
Capacity (veh/h)	701	721	-	-	781	-	-	627
HCM Lane V/C Ratio	0.014	-	-	-	-	-	-	0.016
HCM Control Delay (s)	10.2	0	-	-	0	-	-	10.8
HCM Lane LOS	B	A	-	-	A	-	-	B
HCM 95th %tile Q(veh)	0	0	-	-	0	-	-	0

Movement	EBL	EBT	EBR	WBL	WBT	WBR	NBL	NBT	NBR	SBL	SBT	SBR
Lane Configurations												
Traffic Volume (vph)	0	170	420	20	500	0	0	0	0	20	0	230
Future Volume (vph)	0	170	420	20	500	0	0	0	0	20	0	230
Ideal Flow (vphpl)	2100	2100	2100	2100	2100	2100	2100	2100	2100	2100	2100	2100
Total Lost time (s)		4.0	4.0	4.0	4.0						4.0	4.0
Lane Util. Factor		0.95	1.00	1.00	0.95						1.00	1.00
Frt		1.00	0.85	1.00	1.00						1.00	0.85
Flt Protected		1.00	1.00	0.95	1.00						0.95	1.00
Satd. Flow (prot)		2891	1293	1385	2771						1446	1240
Flt Permitted		1.00	1.00	0.95	1.00						0.95	1.00
Satd. Flow (perm)		2891	1293	1385	2771						1446	1240
Peak-hour factor, PHF	1.00	1.00	1.00	1.00	1.00	1.00	1.00	1.00	1.00	1.00	1.00	1.00
Adj. Flow (vph)	0	170	420	20	500	0	0	0	0	20	0	230
RTOR Reduction (vph)	0	0	274	0	0	0	0	0	0	0	0	175
Lane Group Flow (vph)	0	170	146	20	500	0	0	0	0	0	20	55
Heavy Vehicles (%)	38%	38%	38%	44%	44%	44%	2%	2%	2%	38%	2%	44%
Turn Type		NA	Perm	Prot	NA					Perm	NA	Perm
Protected Phases		4		3	8						6	
Permitted Phases			4							6		6
Actuated Green, G (s)		10.5	10.5	0.5	15.0						7.2	7.2
Effective Green, g (s)		10.5	10.5	0.5	15.0						7.2	7.2
Actuated g/C Ratio		0.35	0.35	0.02	0.50						0.24	0.24
Clearance Time (s)		4.0	4.0	4.0	4.0						4.0	4.0
Vehicle Extension (s)		3.0	3.0	3.0	3.0						3.0	3.0
Lane Grp Cap (vph)		1005	449	22	1376						344	295
v/s Ratio Prot		0.06		0.01	c0.18							
v/s Ratio Perm			0.11								0.01	c0.04
v/c Ratio		0.17	0.33	0.91	0.36						0.06	0.19
Uniform Delay, d1		6.8	7.2	14.8	4.7						8.9	9.2
Progression Factor		1.00	1.00	1.00	1.00						1.00	1.00
Incremental Delay, d2		0.1	0.4	148.5	0.2						0.1	0.3
Delay (s)		6.9	7.7	163.3	4.8						9.0	9.5
Level of Service		A	A	F	A						A	A
Approach Delay (s)		7.4			10.9			0.0			9.4	
Approach LOS		A			B			A			A	

Intersection Summary			
HCM 2000 Control Delay	9.1	HCM 2000 Level of Service	A
HCM 2000 Volume to Capacity ratio	0.37		
Actuated Cycle Length (s)	30.2	Sum of lost time (s)	12.0
Intersection Capacity Utilization	40.2%	ICU Level of Service	A
Analysis Period (min)	15		
c Critical Lane Group			

Movement	EBL	EBT	EBR	WBL	WBT	WBR	NBL	NBT	NBR	SBL	SBT	SBR
Lane Configurations												
Traffic Volume (vph)	0	70	120	0	130	20	390	0	10	0	0	0
Future Volume (vph)	0	70	120	0	130	20	390	0	10	0	0	0
Ideal Flow (vphpl)	2100	2100	2100	2100	2100	2100	2100	2100	2100	2100	2100	2100
Total Lost time (s)		4.0	4.0		4.0		4.0		4.0			
Lane Util. Factor		0.95	1.00		0.95		1.00		1.00			
Frt		1.00	0.85		0.98		1.00		0.85			
Flt Protected		1.00	1.00		1.00		0.95		1.00			
Satd. Flow (prot)		2891	1293		2715		1385		1750			
Flt Permitted		1.00	1.00		1.00		0.95		1.00			
Satd. Flow (perm)		2891	1293		2715		1385		1750			
Peak-hour factor, PHF	1.00	1.00	1.00	1.00	1.00	1.00	1.00	1.00	1.00	1.00	1.00	1.00
Adj. Flow (vph)	0	70	120	0	130	20	390	0	10	0	0	0
RTOR Reduction (vph)	0	0	98	0	16	0	0	0	5	0	0	0
Lane Group Flow (vph)	0	70	23	0	134	0	390	0	5	0	0	0
Heavy Vehicles (%)	38%	38%	38%	44%	44%	44%	44%	2%	2%	2%	2%	2%
Parking (#/hr)											0	
Turn Type		NA	Perm		NA		Prot		Perm			
Protected Phases		4			8		5					
Permitted Phases			4						2			
Actuated Green, G (s)		5.7	5.7		5.7		16.7		16.7			
Effective Green, g (s)		5.7	5.7		5.7		16.7		16.7			
Actuated g/C Ratio		0.19	0.19		0.19		0.55		0.55			
Clearance Time (s)		4.0	4.0		4.0		4.0		4.0			
Vehicle Extension (s)		3.0	3.0		3.0		3.0		3.0			
Lane Grp Cap (vph)		542	242		509		760		961			
v/s Ratio Prot		0.02			c0.05		c0.28					
v/s Ratio Perm			0.02						0.00			
v/c Ratio		0.13	0.09		0.26		0.51		0.01			
Uniform Delay, d1		10.3	10.2		10.6		4.3		3.1			
Progression Factor		1.00	1.00		1.00		1.00		1.00			
Incremental Delay, d2		0.1	0.2		0.3		0.6		0.0			
Delay (s)		10.4	10.4		10.8		4.9		3.1			
Level of Service		B	B		B		A		A			
Approach Delay (s)		10.4			10.8			4.8			0.0	
Approach LOS		B			B			A			A	

Intersection Summary			
HCM 2000 Control Delay	7.5	HCM 2000 Level of Service	A
HCM 2000 Volume to Capacity ratio	0.45		
Actuated Cycle Length (s)	30.4	Sum of lost time (s)	8.0
Intersection Capacity Utilization	30.0%	ICU Level of Service	A
Analysis Period (min)	15		

c Critical Lane Group

Movement	EBL	EBT	WBT	WBR	SBL	SBR
Lane Configurations						
Traffic Volume (vph)	270	1350	1010	130	70	130
Future Volume (vph)	270	1350	1010	130	70	130
Ideal Flow (vphpl)	2100	2100	2100	2100	2100	2100
Total Lost time (s)	4.0	4.0	4.0		4.0	4.0
Lane Util. Factor	1.00	0.91	0.91		1.00	1.00
Frt	1.00	1.00	0.98		1.00	0.85
Flt Protected	0.95	1.00	1.00		0.95	1.00
Satd. Flow (prot)	1956	5621	5524		1956	1750
Flt Permitted	0.95	1.00	1.00		0.95	1.00
Satd. Flow (perm)	1956	5621	5524		1956	1750
Peak-hour factor, PHF	1.00	1.00	1.00	1.00	1.00	1.00
Adj. Flow (vph)	270	1350	1010	130	70	130
RTOR Reduction (vph)	0	0	19	0	0	115
Lane Group Flow (vph)	270	1350	1121	0	70	15
Turn Type	Prot	NA	NA		Perm	Perm
Protected Phases	7	4	8			
Permitted Phases					6	6
Actuated Green, G (s)	13.4	36.9	19.5		6.0	6.0
Effective Green, g (s)	13.4	36.9	19.5		6.0	6.0
Actuated g/C Ratio	0.26	0.72	0.38		0.12	0.12
Clearance Time (s)	4.0	4.0	4.0		4.0	4.0
Vehicle Extension (s)	3.0	3.0	3.0		3.0	3.0
Lane Grp Cap (vph)	514	4074	2116		230	206
v/s Ratio Prot	c0.14	0.24	c0.20			
v/s Ratio Perm					c0.04	0.01
v/c Ratio	0.53	0.33	0.53		0.30	0.07
Uniform Delay, d1	16.0	2.5	12.2		20.5	20.0
Progression Factor	1.00	1.00	1.00		1.00	1.00
Incremental Delay, d2	1.0	0.0	0.3		0.8	0.2
Delay (s)	17.0	2.6	12.4		21.3	20.1
Level of Service	B	A	B		C	C
Approach Delay (s)		5.0	12.4		20.5	
Approach LOS		A	B		C	

Intersection Summary			
HCM 2000 Control Delay	8.9	HCM 2000 Level of Service	A
HCM 2000 Volume to Capacity ratio	0.49		
Actuated Cycle Length (s)	50.9	Sum of lost time (s)	12.0
Intersection Capacity Utilization	47.3%	ICU Level of Service	A
Analysis Period (min)	15		

c Critical Lane Group

Movement	EBL	EBT	EBR	WBL	WBT	WBR	NBL	NBT	NBR	SBL	SBT	SBR
Lane Configurations												
Traffic Volume (vph)	150	1230	40	30	1020	220	50	40	60	70	10	80
Future Volume (vph)	150	1230	40	30	1020	220	50	40	60	70	10	80
Ideal Flow (vphpl)	2100	2100	2100	2100	2100	2100	2100	2100	2100	2100	2100	2100
Total Lost time (s)	4.0	4.0	4.0	4.0	4.0	4.0	4.0	4.0		4.0	4.0	
Lane Util. Factor	1.00	0.91	1.00	1.00	0.91	1.00	1.00	1.00		1.00	1.00	
Frt	1.00	1.00	0.85	1.00	1.00	0.85	1.00	0.91		1.00	0.87	
Flt Protected	0.95	1.00	1.00	0.95	1.00	1.00	0.95	1.00		0.95	1.00	
Satd. Flow (prot)	1956	5621	1750	1956	5621	1750	1956	1874		1956	1784	
Flt Permitted	0.95	1.00	1.00	0.95	1.00	1.00	0.70	1.00		0.69	1.00	
Satd. Flow (perm)	1956	5621	1750	1956	5621	1750	1438	1874		1425	1784	
Peak-hour factor, PHF	1.00	1.00	1.00	1.00	1.00	1.00	1.00	1.00	1.00	1.00	1.00	1.00
Adj. Flow (vph)	150	1230	40	30	1020	220	50	40	60	70	10	80
RTOR Reduction (vph)	0	0	21	0	0	141	0	42	0	0	56	0
Lane Group Flow (vph)	150	1230	19	30	1020	79	50	58	0	70	34	0
Turn Type	Prot	NA	Perm	Prot	NA	Perm	Perm	NA		Perm	NA	
Protected Phases	7	4		3	8			2			6	
Permitted Phases			4			8	2			6		
Actuated Green, G (s)	7.5	26.2	26.2	1.4	20.1	20.1	16.7	16.7		16.7	16.7	
Effective Green, g (s)	7.5	26.2	26.2	1.4	20.1	20.1	16.7	16.7		16.7	16.7	
Actuated g/C Ratio	0.13	0.47	0.47	0.02	0.36	0.36	0.30	0.30		0.30	0.30	
Clearance Time (s)	4.0	4.0	4.0	4.0	4.0	4.0	4.0	4.0		4.0	4.0	
Vehicle Extension (s)	3.0	3.0	3.0	3.0	3.0	3.0	3.0	3.0		3.0	3.0	
Lane Grp Cap (vph)	260	2615	814	48	2006	624	426	555		422	529	
v/s Ratio Prot	c0.08	c0.22		0.02	0.18			0.03			0.02	
v/s Ratio Perm			0.01			0.04	0.03			c0.05		
v/c Ratio	0.58	0.47	0.02	0.62	0.51	0.13	0.12	0.10		0.17	0.06	
Uniform Delay, d1	22.9	10.3	8.1	27.2	14.2	12.2	14.4	14.4		14.6	14.2	
Progression Factor	1.00	1.00	1.00	1.00	1.00	1.00	1.00	1.00		1.00	1.00	
Incremental Delay, d2	3.1	0.1	0.0	22.7	0.2	0.1	0.6	0.4		0.8	0.2	
Delay (s)	26.0	10.4	8.1	49.9	14.4	12.3	15.0	14.7		15.5	14.4	
Level of Service	C	B	A	D	B	B	B	B		B	B	
Approach Delay (s)		12.0			14.9			14.8			14.9	
Approach LOS		B			B			B			B	

Intersection Summary			
HCM 2000 Control Delay	13.5	HCM 2000 Level of Service	B
HCM 2000 Volume to Capacity ratio	0.40		
Actuated Cycle Length (s)	56.3	Sum of lost time (s)	12.0
Intersection Capacity Utilization	45.5%	ICU Level of Service	A
Analysis Period (min)	15		

c Critical Lane Group

Movement	EBL	EBT	EBR	WBL	WBT	WBR	NBL	NBT	NBR	SBL	SBT	SBR
Lane Configurations												
Traffic Volume (vph)	320	1010	30	20	1010	160	40	10	40	150	10	220
Future Volume (vph)	320	1010	30	20	1010	160	40	10	40	150	10	220
Ideal Flow (vphpl)	2100	2100	2100	2100	2100	2100	2100	2100	2100	2100	2100	2100
Total Lost time (s)	4.0	4.0	4.0	4.0	4.0	4.0	4.0	4.0		4.0	4.0	4.0
Lane Util. Factor	1.00	0.91	1.00	1.00	0.91	1.00	1.00	1.00		1.00	1.00	1.00
Frt	1.00	1.00	0.85	1.00	1.00	0.85	1.00	0.88		1.00	1.00	0.85
Flt Protected	0.95	1.00	1.00	0.95	1.00	1.00	0.95	1.00		0.95	1.00	1.00
Satd. Flow (prot)	1956	5621	1750	1956	5621	1750	1956	1812		1956	2059	1750
Flt Permitted	0.95	1.00	1.00	0.95	1.00	1.00	0.75	1.00		0.72	1.00	1.00
Satd. Flow (perm)	1956	5621	1750	1956	5621	1750	1546	1812		1491	2059	1750
Peak-hour factor, PHF	1.00	1.00	1.00	1.00	1.00	1.00	1.00	1.00	1.00	1.00	1.00	1.00
Adj. Flow (vph)	320	1010	30	20	1010	160	40	10	40	150	10	220
RTOR Reduction (vph)	0	0	14	0	0	110	0	28	0	0	0	9
Lane Group Flow (vph)	320	1010	16	20	1010	50	40	22	0	150	10	211
Turn Type	Prot	NA	Perm	Prot	NA	Perm	Perm	NA		Perm	NA	pm+ov
Protected Phases	7	4		3	8			2			6	7
Permitted Phases			4			8	2			6		6
Actuated Green, G (s)	17.8	39.5	39.5	2.1	23.8	23.8	22.5	22.5		22.5	22.5	40.3
Effective Green, g (s)	17.8	39.5	39.5	2.1	23.8	23.8	22.5	22.5		22.5	22.5	40.3
Actuated g/C Ratio	0.23	0.52	0.52	0.03	0.31	0.31	0.30	0.30		0.30	0.30	0.53
Clearance Time (s)	4.0	4.0	4.0	4.0	4.0	4.0	4.0	4.0		4.0	4.0	4.0
Vehicle Extension (s)	3.0	3.0	3.0	3.0	3.0	3.0	3.0	3.0		3.0	3.0	3.0
Lane Grp Cap (vph)	457	2917	908	53	1757	547	457	535		440	608	1018
v/s Ratio Prot	c0.16	0.18		0.01	c0.18			0.01			0.00	0.05
v/s Ratio Perm			0.01			0.03	0.03			c0.10		0.07
v/c Ratio	0.70	0.35	0.02	0.38	0.57	0.09	0.09	0.04		0.34	0.02	0.21
Uniform Delay, d1	26.7	10.7	8.9	36.4	21.9	18.5	19.4	19.1		21.0	19.0	9.5
Progression Factor	1.00	1.00	1.00	1.00	1.00	1.00	1.00	1.00		1.00	1.00	1.00
Incremental Delay, d2	4.8	0.1	0.0	4.5	0.5	0.1	0.4	0.1		2.1	0.0	0.1
Delay (s)	31.5	10.8	8.9	40.8	22.4	18.6	19.8	19.2		23.1	19.0	9.6
Level of Service	C	B	A	D	C	B	B	B		C	B	A
Approach Delay (s)		15.6			22.2			19.5			15.1	
Approach LOS		B			C			B			B	

Intersection Summary			
HCM 2000 Control Delay	18.3	HCM 2000 Level of Service	B
HCM 2000 Volume to Capacity ratio	0.53		
Actuated Cycle Length (s)	76.1	Sum of lost time (s)	12.0
Intersection Capacity Utilization	57.9%	ICU Level of Service	B
Analysis Period (min)	15		

c Critical Lane Group

Movement	EBL	EBT	WBT	WBR	SBL	SBR
Lane Configurations						
Traffic Volume (vph)	340	860	1020	110	70	160
Future Volume (vph)	340	860	1020	110	70	160
Ideal Flow (vphpl)	2100	2100	2100	2100	2100	2100
Total Lost time (s)	4.0	4.0	4.0	4.0	4.0	4.0
Lane Util. Factor	0.97	0.95	0.95	1.00	1.00	0.88
Frt	1.00	1.00	1.00	0.85	1.00	0.85
Flt Protected	0.95	1.00	1.00	1.00	0.95	1.00
Satd. Flow (prot)	2977	3069	2912	1303	1956	3080
Flt Permitted	0.95	1.00	1.00	1.00	0.95	1.00
Satd. Flow (perm)	2977	3069	2912	1303	1956	3080
Peak-hour factor, PHF	1.00	1.00	1.00	1.00	1.00	1.00
Adj. Flow (vph)	340	860	1020	110	70	160
RTOR Reduction (vph)	0	0	0	54	0	125
Lane Group Flow (vph)	340	860	1020	56	70	35
Heavy Vehicles (%)	30%	30%	37%	37%	2%	2%
Turn Type	Prot	NA	NA	Perm	Perm	Over
Protected Phases	7	4	8			7
Permitted Phases				8	6	
Actuated Green, G (s)	14.8	53.2	34.4	34.4	6.6	14.8
Effective Green, g (s)	14.8	53.2	34.4	34.4	6.6	14.8
Actuated g/C Ratio	0.22	0.78	0.51	0.51	0.10	0.22
Clearance Time (s)	4.0	4.0	4.0	4.0	4.0	4.0
Vehicle Extension (s)	3.0	3.0	3.0	3.0	3.0	3.0
Lane Grp Cap (vph)	649	2408	1477	661	190	672
v/s Ratio Prot	c0.11	0.28	c0.35			0.01
v/s Ratio Perm				0.04	c0.04	
v/c Ratio	0.52	0.36	0.69	0.08	0.37	0.05
Uniform Delay, d1	23.4	2.2	12.7	8.6	28.6	21.0
Progression Factor	1.00	1.00	1.00	1.00	1.00	1.00
Incremental Delay, d2	0.8	0.1	1.4	0.1	1.2	0.0
Delay (s)	24.2	2.3	14.1	8.7	29.9	21.0
Level of Service	C	A	B	A	C	C
Approach Delay (s)		8.5	13.5		23.7	
Approach LOS		A	B		C	

Intersection Summary			
HCM 2000 Control Delay	12.1	HCM 2000 Level of Service	B
HCM 2000 Volume to Capacity ratio	0.61		
Actuated Cycle Length (s)	67.8	Sum of lost time (s)	12.0
Intersection Capacity Utilization	47.8%	ICU Level of Service	A
Analysis Period (min)	15		
c Critical Lane Group			

Movement	EBL	EBT	EBR	WBL	WBT	WBR	NBL	NBT	NBR	SBL	SBT	SBR
Lane Configurations												
Traffic Volume (vph)	170	730	30	20	940	180	120	50	20	120	10	80
Future Volume (vph)	170	730	30	20	940	180	120	50	20	120	10	80
Ideal Flow (vphpl)	2100	2100	2100	2100	2100	2100	2100	2100	2100	2100	2100	2100
Total Lost time (s)	4.0	4.0	4.0	4.0	4.0	4.0	4.0	4.0		4.0	4.0	4.0
Lane Util. Factor	0.97	0.95	1.00	1.00	0.95	1.00	1.00	1.00		1.00	1.00	1.00
Frt	1.00	1.00	0.85	1.00	1.00	0.85	1.00	0.96		1.00	1.00	0.85
Flt Protected	0.95	1.00	1.00	0.95	1.00	1.00	0.95	1.00		0.95	1.00	1.00
Satd. Flow (prot)	2977	3069	1373	1435	2871	1284	1956	1971		1956	2059	1750
Flt Permitted	0.95	1.00	1.00	0.95	1.00	1.00	0.75	1.00		0.71	1.00	1.00
Satd. Flow (perm)	2977	3069	1373	1435	2871	1284	1546	1971		1465	2059	1750
Peak-hour factor, PHF	1.00	1.00	1.00	1.00	1.00	1.00	1.00	1.00	1.00	1.00	1.00	1.00
Adj. Flow (vph)	170	730	30	20	940	180	120	50	20	120	10	80
RTOR Reduction (vph)	0	0	10	0	0	87	0	14	0	0	0	69
Lane Group Flow (vph)	170	730	20	20	940	93	120	56	0	120	10	11
Heavy Vehicles (%)	30%	30%	30%	39%	39%	39%	2%	2%	2%	2%	2%	2%
Turn Type	Prot	NA	Perm	Prot	NA	Perm	Perm	NA		Perm	NA	Perm
Protected Phases	7	4		3	8			2			6	
Permitted Phases			4			8	2			6		6
Actuated Green, G (s)	9.6	41.2	41.2	1.0	32.6	32.6	8.6	8.6		8.6	8.6	8.6
Effective Green, g (s)	9.6	41.2	41.2	1.0	32.6	32.6	8.6	8.6		8.6	8.6	8.6
Actuated g/C Ratio	0.15	0.66	0.66	0.02	0.52	0.52	0.14	0.14		0.14	0.14	0.14
Clearance Time (s)	4.0	4.0	4.0	4.0	4.0	4.0	4.0	4.0		4.0	4.0	4.0
Vehicle Extension (s)	3.0	3.0	3.0	3.0	3.0	3.0	3.0	3.0		3.0	3.0	3.0
Lane Grp Cap (vph)	455	2013	900	22	1490	666	211	269		200	281	239
v/s Ratio Prot	c0.06	0.24		0.01	c0.33			0.03			0.00	
v/s Ratio Perm			0.01			0.07	0.08			c0.08		0.01
v/c Ratio	0.37	0.36	0.02	0.91	0.63	0.14	0.57	0.21		0.60	0.04	0.05
Uniform Delay, d1	23.9	4.9	3.8	30.9	10.8	7.8	25.4	24.1		25.5	23.5	23.5
Progression Factor	1.00	1.00	1.00	1.00	1.00	1.00	1.00	1.00		1.00	1.00	1.00
Incremental Delay, d2	0.5	0.1	0.0	148.5	0.9	0.1	3.5	0.4		4.8	0.1	0.1
Delay (s)	24.4	5.0	3.8	179.3	11.7	7.9	28.9	24.5		30.3	23.6	23.6
Level of Service	C	A	A	F	B	A	C	C		C	C	C
Approach Delay (s)		8.5			14.0			27.2			27.4	
Approach LOS		A			B			C			C	

Intersection Summary			
HCM 2000 Control Delay	14.1	HCM 2000 Level of Service	B
HCM 2000 Volume to Capacity ratio	0.58		
Actuated Cycle Length (s)	62.8	Sum of lost time (s)	12.0
Intersection Capacity Utilization	50.6%	ICU Level of Service	A
Analysis Period (min)	15		
c Critical Lane Group			

Movement	EBL	EBT	WBU	WBT	WBR	SBL	SBR
Lane Configurations							
Traffic Volume (vph)	20	840	20	1110	10	10	10
Future Volume (vph)	20	840	20	1110	10	10	10
Ideal Flow (vphpl)	2100	2100	2100	2100	2100	2100	2100
Total Lost time (s)	4.0	4.0	4.0	4.0	4.0	4.0	4.0
Lane Util. Factor	1.00	0.95	1.00	0.95	1.00	1.00	1.00
Frt	1.00	1.00	1.00	1.00	0.85	1.00	0.85
Flt Protected	0.95	1.00	0.95	1.00	1.00	0.95	1.00
Satd. Flow (prot)	1535	3069	1956	2871	1284	1956	1750
Flt Permitted	0.95	1.00	0.95	1.00	1.00	0.95	1.00
Satd. Flow (perm)	1535	3069	1956	2871	1284	1956	1750
Peak-hour factor, PHF	1.00	1.00	1.00	1.00	1.00	1.00	1.00
Adj. Flow (vph)	20	840	20	1110	10	10	10
RTOR Reduction (vph)	0	0	0	0	5	0	7
Lane Group Flow (vph)	20	840	20	1110	5	10	3
Heavy Vehicles (%)	30%	30%	2%	39%	39%	2%	2%
Turn Type	Prot	NA	Prot	NA	Perm	Prot	Perm
Protected Phases	7	4	3	8		6	
Permitted Phases					8		6
Actuated Green, G (s)	0.6	28.5	1.1	29.0	29.0	16.5	16.5
Effective Green, g (s)	0.6	28.5	1.1	29.0	29.0	16.5	16.5
Actuated g/C Ratio	0.01	0.49	0.02	0.50	0.50	0.28	0.28
Clearance Time (s)	4.0	4.0	4.0	4.0	4.0	4.0	4.0
Vehicle Extension (s)	3.0	3.0	3.0	3.0	3.0	3.0	3.0
Lane Grp Cap (vph)	15	1505	37	1433	640	555	496
v/s Ratio Prot	c0.01	0.27	0.01	c0.39		c0.01	
v/s Ratio Perm					0.00		0.00
v/c Ratio	1.33	0.56	0.54	0.77	0.01	0.02	0.01
Uniform Delay, d1	28.8	10.4	28.2	11.9	7.3	15.0	14.9
Progression Factor	1.00	1.00	1.00	1.00	1.00	1.00	1.00
Incremental Delay, d2	353.6	0.5	15.1	2.7	0.0	0.1	0.0
Delay (s)	382.4	10.8	43.4	14.6	7.3	15.0	14.9
Level of Service	F	B	D	B	A	B	B
Approach Delay (s)		19.5		15.0		15.0	
Approach LOS		B		B		B	

Intersection Summary			
HCM 2000 Control Delay	16.9	HCM 2000 Level of Service	B
HCM 2000 Volume to Capacity ratio	0.51		
Actuated Cycle Length (s)	58.1	Sum of lost time (s)	12.0
Intersection Capacity Utilization	37.8%	ICU Level of Service	A
Analysis Period (min)	15		
c Critical Lane Group			

Movement	EBL	EBT	EBR	WBL	WBT	WBR	NBL	NBT	NBR	SBL	SBT	SBR
Lane Configurations												
Traffic Volume (veh/h)	0	820	40	0	1130	20	0	0	10	0	0	10
Future Volume (Veh/h)	0	820	40	0	1130	20	0	0	10	0	0	10
Sign Control		Free			Free			Stop			Stop	
Grade		0%			0%			0%			0%	
Peak Hour Factor	1.00	1.00	1.00	1.00	1.00	1.00	1.00	1.00	1.00	1.00	1.00	1.00
Hourly flow rate (vph)	0	820	40	0	1130	20	0	0	10	0	0	10
Pedestrians												
Lane Width (ft)												
Walking Speed (ft/s)												
Percent Blockage												
Right turn flare (veh)												
Median type		None			None							
Median storage veh)												
Upstream signal (ft)												
pX, platoon unblocked												
vC, conflicting volume	1150			860			1415	1990	430	1560	2000	575
vC1, stage 1 conf vol												
vC2, stage 2 conf vol												
vCu, unblocked vol	1150			860			1415	1990	430	1560	2000	575
tC, single (s)	4.1			4.1			7.5	6.5	6.9	7.5	6.5	6.9
tC, 2 stage (s)												
tF (s)	2.2			2.2			3.5	4.0	3.3	3.5	4.0	3.3
p0 queue free %	100			100			100	100	98	100	100	98
cM capacity (veh/h)	603			777			95	60	573	75	59	461

Direction, Lane #	EB 1	EB 2	WB 1	WB 2	NB 1	SB 1
Volume Total	547	313	753	397	10	10
Volume Left	0	0	0	0	0	0
Volume Right	0	40	0	20	10	10
cSH	1700	1700	1700	1700	573	461
Volume to Capacity	0.32	0.18	0.44	0.23	0.02	0.02
Queue Length 95th (ft)	0	0	0	0	1	2
Control Delay (s)	0.0	0.0	0.0	0.0	11.4	13.0
Lane LOS					B	B
Approach Delay (s)	0.0		0.0		11.4	13.0
Approach LOS					B	B

Intersection Summary			
Average Delay	0.1		
Intersection Capacity Utilization	38.8%	ICU Level of Service	A
Analysis Period (min)	15		

Intersection	
Int Delay, s/veh	0.1

Movement	EBL	EBT	EBR	WBL	WBT	WBR	NBL	NBT	NBR	SBL	SBT	SBR
Traffic Vol, veh/h	0	820	40	0	1130	20	0	0	10	0	0	10
Future Vol, veh/h	0	820	40	0	1130	20	0	0	10	0	0	10
Conflicting Peds, #/hr	0	0	0	0	0	0	0	0	0	0	0	0
Sign Control	Free	Free	Free	Free	Free	Free	Stop	Stop	Stop	Stop	Stop	Stop
RT Channelized	-	-	None	-	-	None	-	-	None	-	-	None
Storage Length	-	-	-	-	-	-	-	-	0	-	-	0
Veh in Median Storage, #	-	0	-	-	0	-	-	0	-	-	0	-
Grade, %	-	0	-	-	0	-	-	0	-	-	0	-
Peak Hour Factor	100	100	100	100	100	100	100	100	100	100	100	100
Heavy Vehicles, %	2	2	2	2	2	2	2	2	2	2	2	2
Mvmt Flow	0	820	40	0	1130	20	0	0	10	0	0	10

Major/Minor	Major1			Major2			Minor1			Minor2		
Conflicting Flow All	1150	0	0	860	0	0	1405	1990	430	1550	2000	575
Stage 1	-	-	-	-	-	-	840	840	-	1140	1140	-
Stage 2	-	-	-	-	-	-	565	1150	-	410	860	-
Critical Hdwy	4.14	-	-	4.14	-	-	7.54	6.54	6.94	7.54	6.54	6.94
Critical Hdwy Stg 1	-	-	-	-	-	-	6.54	5.54	-	6.54	5.54	-
Critical Hdwy Stg 2	-	-	-	-	-	-	6.54	5.54	-	6.54	5.54	-
Follow-up Hdwy	2.22	-	-	2.22	-	-	3.52	4.02	3.32	3.52	4.02	3.32
Pot Cap-1 Maneuver	603	-	-	777	-	-	99	60	573	77	59	461
Stage 1	-	-	-	-	-	-	326	379	-	214	274	-
Stage 2	-	-	-	-	-	-	477	271	-	589	371	-
Platoon blocked, %		-	-		-	-						
Mov Cap-1 Maneuver	603	-	-	777	-	-	97	60	573	76	59	461
Mov Cap-2 Maneuver	-	-	-	-	-	-	97	60	-	76	59	-
Stage 1	-	-	-	-	-	-	326	379	-	214	274	-
Stage 2	-	-	-	-	-	-	467	271	-	579	371	-

Approach	EB	WB	NB	SB
HCM Control Delay, s	0	0	11.4	13
HCM LOS			B	B

Minor Lane/Major Mvmt	NBLn1	EBL	EBT	EBR	WBL	WBT	WBR	SBLn1
Capacity (veh/h)	573	603	-	-	777	-	-	461
HCM Lane V/C Ratio	0.017	-	-	-	-	-	-	0.022
HCM Control Delay (s)	11.4	0	-	-	0	-	-	13
HCM Lane LOS	B	A	-	-	A	-	-	B
HCM 95th %tile Q(veh)	0.1	0	-	-	0	-	-	0.1

Movement	EBL	EBT	EBR	WBL	WBT	WBR	NBL	NBT	NBR	SBL	SBT	SBR
Lane Configurations												
Traffic Volume (veh/h)	0	830	10	0	1150	10	0	0	10	0	0	10
Future Volume (Veh/h)	0	830	10	0	1150	10	0	0	10	0	0	10
Sign Control		Free			Free			Stop			Stop	
Grade		0%			0%			0%			0%	
Peak Hour Factor	1.00	1.00	1.00	1.00	1.00	1.00	1.00	1.00	1.00	1.00	1.00	1.00
Hourly flow rate (vph)	0	830	10	0	1150	10	0	0	10	0	0	10
Pedestrians												
Lane Width (ft)												
Walking Speed (ft/s)												
Percent Blockage												
Right turn flare (veh)												
Median type		None			None							
Median storage veh)												
Upstream signal (ft)												
pX, platoon unblocked												
vC, conflicting volume	1160			840			1420	1995	420	1580	1995	580
vC1, stage 1 conf vol												
vC2, stage 2 conf vol												
vCu, unblocked vol	1160			840			1420	1995	420	1580	1995	580
tC, single (s)	4.1			4.1			7.5	6.5	6.9	7.5	6.5	6.9
tC, 2 stage (s)												
tF (s)	2.2			2.2			3.5	4.0	3.3	3.5	4.0	3.3
p0 queue free %	100			100			100	100	98	100	100	98
cM capacity (veh/h)	598			791			95	60	582	72	60	458

Direction, Lane #	EB 1	EB 2	WB 1	WB 2	NB 1	SB 1
Volume Total	553	287	767	393	10	10
Volume Left	0	0	0	0	0	0
Volume Right	0	10	0	10	10	10
cSH	1700	1700	1700	1700	582	458
Volume to Capacity	0.33	0.17	0.45	0.23	0.02	0.02
Queue Length 95th (ft)	0	0	0	0	1	2
Control Delay (s)	0.0	0.0	0.0	0.0	11.3	13.0
Lane LOS					B	B
Approach Delay (s)	0.0		0.0		11.3	13.0
Approach LOS					B	B

Intersection Summary			
Average Delay	0.1		
Intersection Capacity Utilization	39.0%	ICU Level of Service	A
Analysis Period (min)	15		

Intersection	
Int Delay, s/veh	0.1

Movement	EBL	EBT	EBR	WBL	WBT	WBR	NBL	NBT	NBR	SBL	SBT	SBR
Traffic Vol, veh/h	0	830	10	0	1150	10	0	0	10	0	0	10
Future Vol, veh/h	0	830	10	0	1150	10	0	0	10	0	0	10
Conflicting Peds, #/hr	0	0	0	0	0	0	0	0	0	0	0	0
Sign Control	Free	Free	Free	Free	Free	Free	Stop	Stop	Stop	Stop	Stop	Stop
RT Channelized	-	-	None	-	-	None	-	-	None	-	-	None
Storage Length	-	-	-	-	-	-	-	-	0	-	-	0
Veh in Median Storage, #	-	0	-	-	0	-	-	0	-	-	0	-
Grade, %	-	0	-	-	0	-	-	0	-	-	0	-
Peak Hour Factor	100	100	100	100	100	100	100	100	100	100	100	100
Heavy Vehicles, %	2	2	2	2	2	2	2	2	2	2	2	2
Mvmt Flow	0	830	10	0	1150	10	0	0	10	0	0	10

Major/Minor	Major1			Major2			Minor1			Minor2		
Conflicting Flow All	1160	0	0	840	0	0	1410	1995	420	1570	1995	580
Stage 1	-	-	-	-	-	-	835	835	-	1155	1155	-
Stage 2	-	-	-	-	-	-	575	1160	-	415	840	-
Critical Hdwy	4.14	-	-	4.14	-	-	7.54	6.54	6.94	7.54	6.54	6.94
Critical Hdwy Stg 1	-	-	-	-	-	-	6.54	5.54	-	6.54	5.54	-
Critical Hdwy Stg 2	-	-	-	-	-	-	6.54	5.54	-	6.54	5.54	-
Follow-up Hdwy	2.22	-	-	2.22	-	-	3.52	4.02	3.32	3.52	4.02	3.32
Pot Cap-1 Maneuver	598	-	-	791	-	-	98	60	582	75	60	458
Stage 1	-	-	-	-	-	-	328	381	-	209	269	-
Stage 2	-	-	-	-	-	-	470	268	-	585	379	-
Platoon blocked, %		-	-		-	-						
Mov Cap-1 Maneuver	598	-	-	791	-	-	96	60	582	74	60	458
Mov Cap-2 Maneuver	-	-	-	-	-	-	96	60	-	74	60	-
Stage 1	-	-	-	-	-	-	328	381	-	209	269	-
Stage 2	-	-	-	-	-	-	460	268	-	575	379	-

Approach	EB	WB	NB	SB
HCM Control Delay, s	0	0	11.3	13
HCM LOS			B	B

Minor Lane/Major Mvmt	NBLn1	EBL	EBT	EBR	WBL	WBT	WBR	SBLn1
Capacity (veh/h)	582	598	-	-	791	-	-	458
HCM Lane V/C Ratio	0.017	-	-	-	-	-	-	0.022
HCM Control Delay (s)	11.3	0	-	-	0	-	-	13
HCM Lane LOS	B	A	-	-	A	-	-	B
HCM 95th %tile Q(veh)	0.1	0	-	-	0	-	-	0.1

Movement	EBL	EBT	EBR	WBL	WBT	WBR	NBL	NBT	NBR	SBL	SBT	SBR
Lane Configurations												
Traffic Volume (veh/h)	0	790	50	0	1140	10	0	0	80	0	0	10
Future Volume (Veh/h)	0	790	50	0	1140	10	0	0	80	0	0	10
Sign Control		Free			Free			Stop			Stop	
Grade		0%			0%			0%			0%	
Peak Hour Factor	1.00	1.00	1.00	1.00	1.00	1.00	1.00	1.00	1.00	1.00	1.00	1.00
Hourly flow rate (vph)	0	790	50	0	1140	10	0	0	80	0	0	10
Pedestrians												
Lane Width (ft)												
Walking Speed (ft/s)												
Percent Blockage												
Right turn flare (veh)												
Median type		None			None							
Median storage veh)												
Upstream signal (ft)												
pX, platoon unblocked												
vC, conflicting volume	1150			840			1395	1965	420	1620	1985	575
vC1, stage 1 conf vol												
vC2, stage 2 conf vol												
vCu, unblocked vol	1150			840			1395	1965	420	1620	1985	575
tC, single (s)	4.8			4.1			7.5	6.5	6.9	7.5	6.5	6.9
tC, 2 stage (s)												
tF (s)	2.5			2.2			3.5	4.0	3.3	3.5	4.0	3.3
p0 queue free %	100			100			100	100	86	100	100	98
cM capacity (veh/h)	453			791			99	62	582	59	61	461

Direction, Lane #	EB 1	EB 2	WB 1	WB 2	NB 1	SB 1
Volume Total	527	313	760	390	80	10
Volume Left	0	0	0	0	0	0
Volume Right	0	50	0	10	80	10
cSH	1700	1700	1700	1700	582	461
Volume to Capacity	0.31	0.18	0.45	0.23	0.14	0.02
Queue Length 95th (ft)	0	0	0	0	12	2
Control Delay (s)	0.0	0.0	0.0	0.0	12.2	13.0
Lane LOS					B	B
Approach Delay (s)	0.0		0.0		12.2	13.0
Approach LOS					B	B

Intersection Summary			
Average Delay	0.5		
Intersection Capacity Utilization	38.8%	ICU Level of Service	A
Analysis Period (min)	15		

Intersection	
Int Delay, s/veh	0.5

Movement	EBL	EBT	EBR	WBL	WBT	WBR	NBL	NBT	NBR	SBL	SBT	SBR
Traffic Vol, veh/h	0	790	50	0	1140	10	0	0	80	0	0	10
Future Vol, veh/h	0	790	50	0	1140	10	0	0	80	0	0	10
Conflicting Peds, #/hr	0	0	0	0	0	0	0	0	0	0	0	0
Sign Control	Free	Free	Free	Free	Free	Free	Stop	Stop	Stop	Stop	Stop	Stop
RT Channelized	-	-	None	-	-	None	-	-	None	-	-	None
Storage Length	-	-	-	-	-	-	-	-	0	-	-	0
Veh in Median Storage, #	-	0	-	-	0	-	-	0	-	-	0	-
Grade, %	-	0	-	-	0	-	-	0	-	-	0	-
Peak Hour Factor	100	100	100	100	100	100	100	100	100	100	100	100
Heavy Vehicles, %	33	33	2	2	41	41	2	2	2	2	2	2
Mvmt Flow	0	790	50	0	1140	10	0	0	80	0	0	10

Major/Minor	Major1			Major2			Minor1			Minor2		
Conflicting Flow All	1150	0	0	840	0	0	1385	1965	420	1540	1985	575
Stage 1	-	-	-	-	-	-	815	815	-	1145	1145	-
Stage 2	-	-	-	-	-	-	570	1150	-	395	840	-
Critical Hdwy	4.76	-	-	4.14	-	-	7.54	6.54	6.94	7.54	6.54	6.94
Critical Hdwy Stg 1	-	-	-	-	-	-	6.54	5.54	-	6.54	5.54	-
Critical Hdwy Stg 2	-	-	-	-	-	-	6.54	5.54	-	6.54	5.54	-
Follow-up Hdwy	2.53	-	-	2.22	-	-	3.52	4.02	3.32	3.52	4.02	3.32
Pot Cap-1 Maneuver	453	-	-	791	-	-	103	62	582	79	61	461
Stage 1	-	-	-	-	-	-	338	389	-	212	272	-
Stage 2	-	-	-	-	-	-	474	271	-	602	379	-
Platoon blocked, %		-	-		-	-						
Mov Cap-1 Maneuver	453	-	-	791	-	-	101	62	582	68	61	461
Mov Cap-2 Maneuver	-	-	-	-	-	-	101	62	-	68	61	-
Stage 1	-	-	-	-	-	-	338	389	-	212	272	-
Stage 2	-	-	-	-	-	-	464	271	-	519	379	-

Approach	EB	WB	NB	SB
HCM Control Delay, s	0	0	12.2	13
HCM LOS			B	B

Minor Lane/Major Mvmt	NBLn1	EBL	EBT	EBR	WBL	WBT	WBR	SBLn1
Capacity (veh/h)	582	453	-	-	791	-	-	461
HCM Lane V/C Ratio	0.137	-	-	-	-	-	-	0.022
HCM Control Delay (s)	12.2	0	-	-	0	-	-	13
HCM Lane LOS	B	A	-	-	A	-	-	B
HCM 95th %tile Q(veh)	0.5	0	-	-	0	-	-	0.1

Movement	EBL	EBT	EBR	WBL	WBT	WBR	NBL	NBT	NBR	SBL	SBT	SBR
Lane Configurations												
Traffic Volume (vph)	100	740	40	20	1000	20	70	10	20	10	10	10
Future Volume (vph)	100	740	40	20	1000	20	70	10	20	10	10	10
Ideal Flow (vphpl)	2100	2100	2100	2100	2100	2100	2100	2100	2100	2100	2100	2100
Total Lost time (s)	4.0	4.0	4.0	4.0	4.0		4.0	4.0		4.0	4.0	
Lane Util. Factor	1.00	0.95	1.00	1.00	0.95		1.00	1.00		1.00	1.00	
Frt	1.00	1.00	0.85	1.00	1.00		1.00	0.90		1.00	0.93	
Flt Protected	0.95	1.00	1.00	0.95	1.00		0.95	1.00		0.95	1.00	
Satd. Flow (prot)	1500	3000	1342	1415	2821		1956	1853		1956	1904	
Flt Permitted	0.25	1.00	1.00	0.37	1.00		0.74	1.00		0.74	1.00	
Satd. Flow (perm)	389	3000	1342	545	2821		1532	1853		1519	1904	
Peak-hour factor, PHF	1.00	1.00	1.00	1.00	1.00	1.00	1.00	1.00	1.00	1.00	1.00	1.00
Adj. Flow (vph)	100	740	40	20	1000	20	70	10	20	10	10	10
RTOR Reduction (vph)	0	0	17	0	2	0	0	16	0	0	8	0
Lane Group Flow (vph)	100	740	23	20	1018	0	70	14	0	10	12	0
Heavy Vehicles (%)	33%	33%	33%	41%	41%	41%	2%	2%	2%	2%	2%	2%
Turn Type	Perm	NA	Perm	Perm	NA		Perm	NA		Perm	NA	
Protected Phases		4			8			2			6	
Permitted Phases	4		4	8			2			6		
Actuated Green, G (s)	21.1	21.1	21.1	21.1	21.1		7.5	7.5		7.5	7.5	
Effective Green, g (s)	21.1	21.1	21.1	21.1	21.1		7.5	7.5		7.5	7.5	
Actuated g/C Ratio	0.58	0.58	0.58	0.58	0.58		0.20	0.20		0.20	0.20	
Clearance Time (s)	4.0	4.0	4.0	4.0	4.0		4.0	4.0		4.0	4.0	
Vehicle Extension (s)	3.0	3.0	3.0	3.0	3.0		3.0	3.0		3.0	3.0	
Lane Grp Cap (vph)	224	1729	773	314	1626		313	379		311	390	
v/s Ratio Prot		0.25			c0.36			0.01			0.01	
v/s Ratio Perm	0.26		0.02	0.04			c0.05			0.01		
v/c Ratio	0.45	0.43	0.03	0.06	0.63		0.22	0.04		0.03	0.03	
Uniform Delay, d1	4.4	4.4	3.3	3.4	5.1		12.1	11.7		11.6	11.6	
Progression Factor	1.00	1.00	1.00	1.00	1.00		1.00	1.00		1.00	1.00	
Incremental Delay, d2	1.4	0.2	0.0	0.1	0.8		0.4	0.0		0.0	0.0	
Delay (s)	5.8	4.5	3.4	3.5	5.9		12.5	11.7		11.7	11.7	
Level of Service	A	A	A	A	A		B	B		B	B	
Approach Delay (s)		4.6			5.9			12.3			11.7	
Approach LOS		A			A			B			B	

Intersection Summary			
HCM 2000 Control Delay	5.7	HCM 2000 Level of Service	A
HCM 2000 Volume to Capacity ratio	0.52		
Actuated Cycle Length (s)	36.6	Sum of lost time (s)	8.0
Intersection Capacity Utilization	50.8%	ICU Level of Service	A
Analysis Period (min)	15		
c Critical Lane Group			

Movement	EBL	EBT	EBR	WBL	WBT	WBR	NBL	NBT	NBR	SBL	SBT	SBR
Lane Configurations												
Traffic Volume (veh/h)	0	720	40	0	1010	20	0	0	10	0	0	10
Future Volume (Veh/h)	0	720	40	0	1010	20	0	0	10	0	0	10
Sign Control		Free			Free			Stop			Stop	
Grade		0%			0%			0%			0%	
Peak Hour Factor	1.00	1.00	1.00	1.00	1.00	1.00	1.00	1.00	1.00	1.00	1.00	1.00
Hourly flow rate (vph)	0	720	40	0	1010	20	0	0	10	0	0	10
Pedestrians												
Lane Width (ft)												
Walking Speed (ft/s)												
Percent Blockage												
Right turn flare (veh)												
Median type		None			None							
Median storage veh)												
Upstream signal (ft)												
pX, platoon unblocked												
vC, conflicting volume	1030			760			1255	1770	380	1390	1780	515
vC1, stage 1 conf vol												
vC2, stage 2 conf vol												
vCu, unblocked vol	1030			760			1255	1770	380	1390	1780	515
tC, single (s)	4.7			4.9			7.5	6.5	6.9	7.5	6.5	6.9
tC, 2 stage (s)												
tF (s)	2.5			2.6			3.5	4.0	3.3	3.5	4.0	3.3
p0 queue free %	100			100			100	100	98	100	100	98
cM capacity (veh/h)	521			644			126	82	618	100	81	505

Direction, Lane #	EB 1	EB 2	WB 1	WB 2	NB 1	SB 1
Volume Total	480	280	673	357	10	10
Volume Left	0	0	0	0	0	0
Volume Right	0	40	0	20	10	10
cSH	1700	1700	1700	1700	618	505
Volume to Capacity	0.28	0.16	0.40	0.21	0.02	0.02
Queue Length 95th (ft)	0	0	0	0	1	2
Control Delay (s)	0.0	0.0	0.0	0.0	10.9	12.3
Lane LOS					B	B
Approach Delay (s)	0.0		0.0		10.9	12.3
Approach LOS					B	B

Intersection Summary			
Average Delay	0.1		
Intersection Capacity Utilization	35.8%	ICU Level of Service	A
Analysis Period (min)	15		

Intersection	
Int Delay, s/veh	0.1

Movement	EBL	EBT	EBR	WBL	WBT	WBR	NBL	NBT	NBR	SBL	SBT	SBR
Traffic Vol, veh/h	0	720	40	0	1010	20	0	0	10	0	0	10
Future Vol, veh/h	0	720	40	0	1010	20	0	0	10	0	0	10
Conflicting Peds, #/hr	0	0	0	0	0	0	0	0	0	0	0	0
Sign Control	Free	Free	Free	Free	Free	Free	Stop	Stop	Stop	Stop	Stop	Stop
RT Channelized	-	-	None	-	-	None	-	-	None	-	-	None
Storage Length	-	-	-	-	-	-	-	-	0	-	-	0
Veh in Median Storage, #	-	0	-	-	0	-	-	0	-	-	0	-
Grade, %	-	0	-	-	0	-	-	0	-	-	0	-
Peak Hour Factor	100	100	100	100	100	100	100	100	100	100	100	100
Heavy Vehicles, %	31	31	31	39	39	39	2	2	2	2	2	2
Mvmt Flow	0	720	40	0	1010	20	0	0	10	0	0	10

Major/Minor	Major1			Major2			Minor1			Minor2		
Conflicting Flow All	1030	0	0	760	0	0	1245	1770	380	1380	1780	515
Stage 1	-	-	-	-	-	-	740	740	-	1020	1020	-
Stage 2	-	-	-	-	-	-	505	1030	-	360	760	-
Critical Hdwy	4.72	-	-	4.88	-	-	7.54	6.54	6.94	7.54	6.54	6.94
Critical Hdwy Stg 1	-	-	-	-	-	-	6.54	5.54	-	6.54	5.54	-
Critical Hdwy Stg 2	-	-	-	-	-	-	6.54	5.54	-	6.54	5.54	-
Follow-up Hdwy	2.51	-	-	2.59	-	-	3.52	4.02	3.32	3.52	4.02	3.32
Pot Cap-1 Maneuver	521	-	-	644	-	-	130	82	618	104	81	505
Stage 1	-	-	-	-	-	-	375	421	-	253	312	-
Stage 2	-	-	-	-	-	-	518	309	-	631	413	-
Platoon blocked, %		-	-		-	-						
Mov Cap-1 Maneuver	521	-	-	644	-	-	127	82	618	102	81	505
Mov Cap-2 Maneuver	-	-	-	-	-	-	127	82	-	102	81	-
Stage 1	-	-	-	-	-	-	375	421	-	253	312	-
Stage 2	-	-	-	-	-	-	508	309	-	621	413	-

Approach	EB	WB	NB	SB
HCM Control Delay, s	0	0	10.9	12.3
HCM LOS			B	B

Minor Lane/Major Mvmt	NBLn1	EBL	EBT	EBR	WBL	WBT	WBR	SBLn1
Capacity (veh/h)	618	521	-	-	644	-	-	505
HCM Lane V/C Ratio	0.016	-	-	-	-	-	-	0.02
HCM Control Delay (s)	10.9	0	-	-	0	-	-	12.3
HCM Lane LOS	B	A	-	-	A	-	-	B
HCM 95th %tile Q(veh)	0	0	-	-	0	-	-	0.1

Movement	EBL	EBT	EBR	WBL	WBT	WBR	NBL	NBT	NBR	SBL	SBT	SBR
Lane Configurations												
Traffic Volume (vph)	40	680	20	20	930	20	70	10	20	30	10	20
Future Volume (vph)	40	680	20	20	930	20	70	10	20	30	10	20
Ideal Flow (vphpl)	2100	2100	2100	2100	2100	2100	2100	2100	2100	2100	2100	2100
Total Lost time (s)	4.0	4.0		4.0	4.0		4.0	4.0		4.0	4.0	
Lane Util. Factor	1.00	0.95		1.00	0.95		1.00	1.00		1.00	1.00	
Frt	1.00	1.00		1.00	1.00		1.00	0.90		1.00	0.90	
Flt Protected	0.95	1.00		0.95	1.00		0.95	1.00		0.95	1.00	
Satd. Flow (prot)	1523	3033		1435	2861		1956	1853		1956	1853	
Flt Permitted	0.27	1.00		0.39	1.00		0.74	1.00		0.74	1.00	
Satd. Flow (perm)	432	3033		582	2861		1519	1853		1519	1853	
Peak-hour factor, PHF	1.00	1.00	1.00	1.00	1.00	1.00	1.00	1.00	1.00	1.00	1.00	1.00
Adj. Flow (vph)	40	680	20	20	930	20	70	10	20	30	10	20
RTOR Reduction (vph)	0	3	0	0	2	0	0	16	0	0	16	0
Lane Group Flow (vph)	40	697	0	20	948	0	70	14	0	30	14	0
Heavy Vehicles (%)	31%	31%	31%	39%	39%	39%	2%	2%	2%	2%	2%	2%
Turn Type	Perm	NA		Perm	NA		Perm	NA		Perm	NA	
Protected Phases		4			8			2			6	
Permitted Phases	4			8			2			6		
Actuated Green, G (s)	17.9	17.9		17.9	17.9		7.3	7.3		7.3	7.3	
Effective Green, g (s)	17.9	17.9		17.9	17.9		7.3	7.3		7.3	7.3	
Actuated g/C Ratio	0.54	0.54		0.54	0.54		0.22	0.22		0.22	0.22	
Clearance Time (s)	4.0	4.0		4.0	4.0		4.0	4.0		4.0	4.0	
Vehicle Extension (s)	3.0	3.0		3.0	3.0		3.0	3.0		3.0	3.0	
Lane Grp Cap (vph)	232	1635		313	1542		333	407		333	407	
v/s Ratio Prot		0.23			c0.33			0.01			0.01	
v/s Ratio Perm	0.09			0.03			c0.05			0.02		
v/c Ratio	0.17	0.43		0.06	0.61		0.21	0.04		0.09	0.04	
Uniform Delay, d1	3.9	4.6		3.7	5.3		10.6	10.2		10.3	10.2	
Progression Factor	1.00	1.00		1.00	1.00		1.00	1.00		1.00	1.00	
Incremental Delay, d2	0.4	0.2		0.1	0.7		0.3	0.0		0.1	0.0	
Delay (s)	4.2	4.8		3.7	6.0		10.9	10.2		10.4	10.2	
Level of Service	A	A		A	A		B	B		B	B	
Approach Delay (s)		4.7			6.0			10.7			10.3	
Approach LOS		A			A			B			B	

Intersection Summary			
HCM 2000 Control Delay	5.9	HCM 2000 Level of Service	A
HCM 2000 Volume to Capacity ratio	0.50		
Actuated Cycle Length (s)	33.2	Sum of lost time (s)	8.0
Intersection Capacity Utilization	46.9%	ICU Level of Service	A
Analysis Period (min)	15		
c Critical Lane Group			

Movement	EBL	EBT	EBR	WBL	WBT	WBR	NBL	NBT	NBR	SBL	SBT	SBR
Lane Configurations												
Traffic Volume (veh/h)	0	720	10	0	950	10	0	0	10	0	0	10
Future Volume (Veh/h)	0	720	10	0	950	10	0	0	10	0	0	10
Sign Control		Free			Free			Stop			Stop	
Grade		0%			0%			0%			0%	
Peak Hour Factor	1.00	1.00	1.00	1.00	1.00	1.00	1.00	1.00	1.00	1.00	1.00	1.00
Hourly flow rate (vph)	0	720	10	0	950	10	0	0	10	0	0	10
Pedestrians												
Lane Width (ft)												
Walking Speed (ft/s)												
Percent Blockage												
Right turn flare (veh)												
Median type		None			None							
Median storage veh)												
Upstream signal (ft)												
pX, platoon unblocked												
vC, conflicting volume	960			730			1210	1685	365	1325	1685	480
vC1, stage 1 conf vol												
vC2, stage 2 conf vol												
vCu, unblocked vol	960			730			1210	1685	365	1325	1685	480
tC, single (s)	4.1			4.1			7.5	6.5	6.9	7.5	6.5	6.9
tC, 2 stage (s)												
tF (s)	2.2			2.2			3.5	4.0	3.3	3.5	4.0	3.3
p0 queue free %	100			100			100	100	98	100	100	98
cM capacity (veh/h)	712			870			136	93	632	112	93	532

Direction, Lane #	EB 1	EB 2	WB 1	WB 2	NB 1	SB 1
Volume Total	480	250	633	327	10	10
Volume Left	0	0	0	0	0	0
Volume Right	0	10	0	10	10	10
cSH	1700	1700	1700	1700	632	532
Volume to Capacity	0.28	0.15	0.37	0.19	0.02	0.02
Queue Length 95th (ft)	0	0	0	0	1	1
Control Delay (s)	0.0	0.0	0.0	0.0	10.8	11.9
Lane LOS					B	B
Approach Delay (s)	0.0		0.0		10.8	11.9
Approach LOS					B	B

Intersection Summary			
Average Delay	0.1		
Intersection Capacity Utilization	34.0%	ICU Level of Service	A
Analysis Period (min)	15		

Intersection	
Int Delay, s/veh	0.1

Movement	EBL	EBT	EBR	WBL	WBT	WBR	NBL	NBT	NBR	SBL	SBT	SBR
Traffic Vol, veh/h	0	720	10	0	950	10	0	0	10	0	0	10
Future Vol, veh/h	0	720	10	0	950	10	0	0	10	0	0	10
Conflicting Peds, #/hr	0	0	0	0	0	0	0	0	0	0	0	0
Sign Control	Free	Free	Free	Free	Free	Free	Stop	Stop	Stop	Stop	Stop	Stop
RT Channelized	-	-	None	-	-	None	-	-	None	-	-	None
Storage Length	-	-	-	-	-	-	-	-	0	-	-	0
Veh in Median Storage, #	-	0	-	-	0	-	-	0	-	-	0	-
Grade, %	-	0	-	-	0	-	-	0	-	-	0	-
Peak Hour Factor	100	100	100	100	100	100	100	100	100	100	100	100
Heavy Vehicles, %	2	2	2	2	2	2	2	2	2	2	2	2
Mvmt Flow	0	720	10	0	950	10	0	0	10	0	0	10

Major/Minor	Major1			Major2			Minor1			Minor2		
Conflicting Flow All	960	0	0	730	0	0	1200	1685	365	1315	1685	480
Stage 1	-	-	-	-	-	-	725	725	-	955	955	-
Stage 2	-	-	-	-	-	-	475	960	-	360	730	-
Critical Hdwy	4.14	-	-	4.14	-	-	7.54	6.54	6.94	7.54	6.54	6.94
Critical Hdwy Stg 1	-	-	-	-	-	-	6.54	5.54	-	6.54	5.54	-
Critical Hdwy Stg 2	-	-	-	-	-	-	6.54	5.54	-	6.54	5.54	-
Follow-up Hdwy	2.22	-	-	2.22	-	-	3.52	4.02	3.32	3.52	4.02	3.32
Pot Cap-1 Maneuver	712	-	-	870	-	-	141	93	632	116	93	532
Stage 1	-	-	-	-	-	-	383	428	-	278	335	-
Stage 2	-	-	-	-	-	-	539	333	-	631	426	-
Platoon blocked, %		-	-		-	-						
Mov Cap-1 Maneuver	712	-	-	870	-	-	138	93	632	114	93	532
Mov Cap-2 Maneuver	-	-	-	-	-	-	138	93	-	114	93	-
Stage 1	-	-	-	-	-	-	383	428	-	278	335	-
Stage 2	-	-	-	-	-	-	529	333	-	621	426	-

Approach	EB	WB	NB	SB
HCM Control Delay, s	0	0	10.8	11.9
HCM LOS			B	B

Minor Lane/Major Mvmt	NBLn1	EBL	EBT	EBR	WBL	WBT	WBR	SBLn1
Capacity (veh/h)	632	712	-	-	870	-	-	532
HCM Lane V/C Ratio	0.016	-	-	-	-	-	-	0.019
HCM Control Delay (s)	10.8	0	-	-	0	-	-	11.9
HCM Lane LOS	B	A	-	-	A	-	-	B
HCM 95th %tile Q(veh)	0	0	-	-	0	-	-	0.1

Movement	EBL	EBT	EBR	WBL	WBT	WBR	NBL	NBT	NBR	SBL	SBT	SBR
Lane Configurations												
Traffic Volume (veh/h)	0	700	0	0	950	20	0	0	0	0	0	10
Future Volume (Veh/h)	0	700	0	0	950	20	0	0	0	0	0	10
Sign Control		Free			Free			Stop			Stop	
Grade		0%			0%			0%			0%	
Peak Hour Factor	1.00	1.00	1.00	1.00	1.00	1.00	1.00	1.00	1.00	1.00	1.00	1.00
Hourly flow rate (vph)	0	700	0	0	950	20	0	0	0	0	0	10
Pedestrians												
Lane Width (ft)												
Walking Speed (ft/s)												
Percent Blockage												
Right turn flare (veh)												
Median type		None			None							
Median storage veh)												
Upstream signal (ft)												
pX, platoon unblocked												
vC, conflicting volume	970			700			1185	1670	350	1310	1660	485
vC1, stage 1 conf vol												
vC2, stage 2 conf vol												
vCu, unblocked vol	970			700			1185	1670	350	1310	1660	485
tC, single (s)	4.1			4.1			7.5	6.5	6.9	7.5	6.5	6.9
tC, 2 stage (s)												
tF (s)	2.2			2.2			3.5	4.0	3.3	3.5	4.0	3.3
p0 queue free %	100			100			100	100	100	100	100	98
cM capacity (veh/h)	706			893			142	95	646	117	96	528

Direction, Lane #	EB 1	EB 2	WB 1	WB 2	NB 1	SB 1
Volume Total	467	233	633	337	0	10
Volume Left	0	0	0	0	0	0
Volume Right	0	0	0	20	0	10
cSH	1700	1700	1700	1700	1700	528
Volume to Capacity	0.27	0.14	0.37	0.20	0.00	0.02
Queue Length 95th (ft)	0	0	0	0	0	1
Control Delay (s)	0.0	0.0	0.0	0.0	0.0	11.9
Lane LOS					A	B
Approach Delay (s)	0.0		0.0		0.0	11.9
Approach LOS					A	B

Intersection Summary			
Average Delay	0.1		
Intersection Capacity Utilization	34.3%	ICU Level of Service	A
Analysis Period (min)	15		

Intersection	
Int Delay, s/veh	0.1

Movement	EBL	EBT	EBR	WBL	WBT	WBR	NBL	NBT	NBR	SBL	SBT	SBR
Traffic Vol, veh/h	0	700	0	0	950	20	0	0	0	0	0	10
Future Vol, veh/h	0	700	0	0	950	20	0	0	0	0	0	10
Conflicting Peds, #/hr	0	0	0	0	0	0	0	0	0	0	0	0
Sign Control	Free	Free	Free	Free	Free	Free	Stop	Stop	Stop	Stop	Stop	Stop
RT Channelized	-	-	None	-	-	None	-	-	None	-	-	None
Storage Length	-	-	-	-	-	-	-	-	0	-	-	0
Veh in Median Storage, #	-	0	-	-	0	-	-	0	-	-	0	-
Grade, %	-	0	-	-	0	-	-	0	-	-	0	-
Peak Hour Factor	100	100	100	100	100	100	100	100	100	100	100	100
Heavy Vehicles, %	2	2	2	2	2	2	2	2	2	2	2	2
Mvmt Flow	0	700	0	0	950	20	0	0	0	0	0	10

Major/Minor	Major1			Major2			Minor1			Minor2		
Conflicting Flow All	970	0	0	700	0	0	1175	1670	350	1310	1660	485
Stage 1	-	-	-	-	-	-	700	700	-	960	960	-
Stage 2	-	-	-	-	-	-	475	970	-	350	700	-
Critical Hdwy	4.14	-	-	4.14	-	-	7.54	6.54	6.94	7.54	6.54	6.94
Critical Hdwy Stg 1	-	-	-	-	-	-	6.54	5.54	-	6.54	5.54	-
Critical Hdwy Stg 2	-	-	-	-	-	-	6.54	5.54	-	6.54	5.54	-
Follow-up Hdwy	2.22	-	-	2.22	-	-	3.52	4.02	3.32	3.52	4.02	3.32
Pot Cap-1 Maneuver	706	-	-	893	-	-	147	95	646	117	96	528
Stage 1	-	-	-	-	-	-	396	440	-	276	333	-
Stage 2	-	-	-	-	-	-	539	330	-	639	440	-
Platoon blocked, %		-	-		-	-						
Mov Cap-1 Maneuver	706	-	-	893	-	-	144	95	646	117	96	528
Mov Cap-2 Maneuver	-	-	-	-	-	-	144	95	-	117	96	-
Stage 1	-	-	-	-	-	-	396	440	-	276	333	-
Stage 2	-	-	-	-	-	-	529	330	-	639	440	-

Approach	EB	WB	NB	SB
HCM Control Delay, s	0	0	0	12
HCM LOS			A	B

Minor Lane/Major Mvmt	NBLn1	EBL	EBT	EBR	WBL	WBT	WBR	SBLn1
Capacity (veh/h)	-	706	-	-	893	-	-	528
HCM Lane V/C Ratio	-	-	-	-	-	-	-	0.019
HCM Control Delay (s)	0	0	-	-	0	-	-	12
HCM Lane LOS	A	A	-	-	A	-	-	B
HCM 95th %tile Q(veh)	-	0	-	-	0	-	-	0.1

Movement	EBL	EBT	EBR	WBL	WBT	WBR	NBL	NBT	NBR	SBL	SBT	SBR
Lane Configurations												
Traffic Volume (veh/h)	0	700	10	0	970	10	0	0	10	0	0	10
Future Volume (Veh/h)	0	700	10	0	970	10	0	0	10	0	0	10
Sign Control		Free			Free			Stop			Stop	
Grade		0%			0%			0%			0%	
Peak Hour Factor	1.00	1.00	1.00	1.00	1.00	1.00	1.00	1.00	1.00	1.00	1.00	1.00
Hourly flow rate (vph)	0	700	10	0	970	10	0	0	10	0	0	10
Pedestrians												
Lane Width (ft)												
Walking Speed (ft/s)												
Percent Blockage												
Right turn flare (veh)												
Median type		None			None							
Median storage veh)												
Upstream signal (ft)												
pX, platoon unblocked												
vC, conflicting volume	980			710			1200	1685	355	1335	1685	490
vC1, stage 1 conf vol												
vC2, stage 2 conf vol												
vCu, unblocked vol	980			710			1200	1685	355	1335	1685	490
tC, single (s)	4.1			4.1			7.5	6.5	6.9	7.5	6.5	6.9
tC, 2 stage (s)												
tF (s)	2.2			2.2			3.5	4.0	3.3	3.5	4.0	3.3
p0 queue free %	100			100			100	100	98	100	100	98
cM capacity (veh/h)	700			885			138	93	641	110	93	524

Direction, Lane #	EB 1	EB 2	WB 1	WB 2	NB 1	SB 1
Volume Total	467	243	647	333	10	10
Volume Left	0	0	0	0	0	0
Volume Right	0	10	0	10	10	10
cSH	1700	1700	1700	1700	641	524
Volume to Capacity	0.27	0.14	0.38	0.20	0.02	0.02
Queue Length 95th (ft)	0	0	0	0	1	1
Control Delay (s)	0.0	0.0	0.0	0.0	10.7	12.0
Lane LOS					B	B
Approach Delay (s)	0.0		0.0		10.7	12.0
Approach LOS					B	B

Intersection Summary			
Average Delay	0.1		
Intersection Capacity Utilization	34.5%	ICU Level of Service	A
Analysis Period (min)	15		

Intersection	
Int Delay, s/veh	0.1

Movement	EBL	EBT	EBR	WBL	WBT	WBR	NBL	NBT	NBR	SBL	SBT	SBR
Traffic Vol, veh/h	0	700	10	0	970	10	0	0	10	0	0	10
Future Vol, veh/h	0	700	10	0	970	10	0	0	10	0	0	10
Conflicting Peds, #/hr	0	0	0	0	0	0	0	0	0	0	0	0
Sign Control	Free	Free	Free	Free	Free	Free	Stop	Stop	Stop	Stop	Stop	Stop
RT Channelized	-	-	None	-	-	None	-	-	None	-	-	None
Storage Length	-	-	-	-	-	-	-	-	0	-	-	0
Veh in Median Storage, #	-	0	-	-	0	-	-	0	-	-	0	-
Grade, %	-	0	-	-	0	-	-	0	-	-	0	-
Peak Hour Factor	100	100	100	100	100	100	100	100	100	100	100	100
Heavy Vehicles, %	2	2	2	2	2	2	2	2	2	2	2	2
Mvmt Flow	0	700	10	0	970	10	0	0	10	0	0	10

Major/Minor	Major1			Major2			Minor1			Minor2		
Conflicting Flow All	980	0	0	710	0	0	1190	1685	355	1325	1685	490
Stage 1	-	-	-	-	-	-	705	705	-	975	975	-
Stage 2	-	-	-	-	-	-	485	980	-	350	710	-
Critical Hdwy	4.14	-	-	4.14	-	-	7.54	6.54	6.94	7.54	6.54	6.94
Critical Hdwy Stg 1	-	-	-	-	-	-	6.54	5.54	-	6.54	5.54	-
Critical Hdwy Stg 2	-	-	-	-	-	-	6.54	5.54	-	6.54	5.54	-
Follow-up Hdwy	2.22	-	-	2.22	-	-	3.52	4.02	3.32	3.52	4.02	3.32
Pot Cap-1 Maneuver	700	-	-	885	-	-	143	93	641	114	93	524
Stage 1	-	-	-	-	-	-	393	437	-	270	328	-
Stage 2	-	-	-	-	-	-	532	326	-	639	435	-
Platoon blocked, %		-	-		-	-						
Mov Cap-1 Maneuver	700	-	-	885	-	-	140	93	641	112	93	524
Mov Cap-2 Maneuver	-	-	-	-	-	-	140	93	-	112	93	-
Stage 1	-	-	-	-	-	-	393	437	-	270	328	-
Stage 2	-	-	-	-	-	-	522	326	-	629	435	-

Approach	EB	WB	NB	SB
HCM Control Delay, s	0	0	10.7	12
HCM LOS			B	B

Minor Lane/Major Mvmt	NBLn1	EBL	EBT	EBR	WBL	WBT	WBR	SBLn1
Capacity (veh/h)	641	700	-	-	885	-	-	524
HCM Lane V/C Ratio	0.016	-	-	-	-	-	-	0.019
HCM Control Delay (s)	10.7	0	-	-	0	-	-	12
HCM Lane LOS	B	A	-	-	A	-	-	B
HCM 95th %tile Q(veh)	0	0	-	-	0	-	-	0.1

Movement	EBL	EBT	EBR	WBL	WBT	WBR	NBL	NBT	NBR	SBL	SBT	SBR
Lane Configurations												
Traffic Volume (veh/h)	0	700	10	0	960	40	0	0	20	0	0	10
Future Volume (Veh/h)	0	700	10	0	960	40	0	0	20	0	0	10
Sign Control		Free			Free			Stop			Stop	
Grade		0%			0%			0%			0%	
Peak Hour Factor	1.00	1.00	1.00	1.00	1.00	1.00	1.00	1.00	1.00	1.00	1.00	1.00
Hourly flow rate (vph)	0	700	10	0	960	40	0	0	20	0	0	10
Pedestrians												
Lane Width (ft)												
Walking Speed (ft/s)												
Percent Blockage												
Right turn flare (veh)												
Median type		None			None							
Median storage veh)												
Upstream signal (ft)												
pX, platoon unblocked												
vC, conflicting volume	1000			710			1195	1705	355	1350	1690	500
vC1, stage 1 conf vol												
vC2, stage 2 conf vol												
vCu, unblocked vol	1000			710			1195	1705	355	1350	1690	500
tC, single (s)	4.7			4.8			7.5	6.5	6.9	7.5	6.5	6.9
tC, 2 stage (s)												
tF (s)	2.5			2.6			3.5	4.0	3.3	3.5	4.0	3.3
p0 queue free %	100			100			100	100	97	100	100	98
cM capacity (veh/h)	546			692			139	90	641	106	92	516

Direction, Lane #	EB 1	EB 2	WB 1	WB 2	NB 1	SB 1
Volume Total	467	243	640	360	20	10
Volume Left	0	0	0	0	0	0
Volume Right	0	10	0	40	20	10
cSH	1700	1700	1700	1700	641	516
Volume to Capacity	0.27	0.14	0.38	0.21	0.03	0.02
Queue Length 95th (ft)	0	0	0	0	2	1
Control Delay (s)	0.0	0.0	0.0	0.0	10.8	12.1
Lane LOS					B	B
Approach Delay (s)	0.0		0.0		10.8	12.1
Approach LOS					B	B

Intersection Summary			
Average Delay	0.2		
Intersection Capacity Utilization	35.2%	ICU Level of Service	A
Analysis Period (min)	15		

Intersection	
Int Delay, s/veh	0.2

Movement	EBL	EBT	EBR	WBL	WBT	WBR	NBL	NBT	NBR	SBL	SBT	SBR
Traffic Vol, veh/h	0	700	10	0	960	40	0	0	20	0	0	10
Future Vol, veh/h	0	700	10	0	960	40	0	0	20	0	0	10
Conflicting Peds, #/hr	0	0	0	0	0	0	0	0	0	0	0	0
Sign Control	Free	Free	Free	Free	Free	Free	Stop	Stop	Stop	Stop	Stop	Stop
RT Channelized	-	-	None	-	-	None	-	-	None	-	-	None
Storage Length	-	-	-	-	-	-	-	-	0	-	-	0
Veh in Median Storage, #	-	0	-	-	0	-	-	0	-	-	0	-
Grade, %	-	0	-	-	0	-	-	0	-	-	0	-
Peak Hour Factor	100	100	100	100	100	100	100	100	100	100	100	100
Heavy Vehicles, %	29	29	29	36	36	36	2	2	2	2	2	2
Mvmt Flow	0	700	10	0	960	40	0	0	20	0	0	10

Major/Minor	Major1			Major2			Minor1			Minor2		
Conflicting Flow All	1000	0	0	710	0	0	1185	1705	355	1330	1690	500
Stage 1	-	-	-	-	-	-	705	705	-	980	980	-
Stage 2	-	-	-	-	-	-	480	1000	-	350	710	-
Critical Hdwy	4.68	-	-	4.82	-	-	7.54	6.54	6.94	7.54	6.54	6.94
Critical Hdwy Stg 1	-	-	-	-	-	-	6.54	5.54	-	6.54	5.54	-
Critical Hdwy Stg 2	-	-	-	-	-	-	6.54	5.54	-	6.54	5.54	-
Follow-up Hdwy	2.49	-	-	2.56	-	-	3.52	4.02	3.32	3.52	4.02	3.32
Pot Cap-1 Maneuver	546	-	-	692	-	-	144	90	641	113	92	516
Stage 1	-	-	-	-	-	-	393	437	-	268	326	-
Stage 2	-	-	-	-	-	-	536	319	-	639	435	-
Platoon blocked, %		-	-		-	-						
Mov Cap-1 Maneuver	546	-	-	692	-	-	141	90	641	109	92	516
Mov Cap-2 Maneuver	-	-	-	-	-	-	141	90	-	109	92	-
Stage 1	-	-	-	-	-	-	393	437	-	268	326	-
Stage 2	-	-	-	-	-	-	526	319	-	619	435	-

Approach	EB	WB	NB	SB
HCM Control Delay, s	0	0	10.8	12.1
HCM LOS			B	B

Minor Lane/Major Mvmt	NBLn1	EBL	EBT	EBR	WBL	WBT	WBR	SBLn1
Capacity (veh/h)	641	546	-	-	692	-	-	516
HCM Lane V/C Ratio	0.031	-	-	-	-	-	-	0.019
HCM Control Delay (s)	10.8	0	-	-	0	-	-	12.1
HCM Lane LOS	B	A	-	-	A	-	-	B
HCM 95th %tile Q(veh)	0.1	0	-	-	0	-	-	0.1

Movement	EBL	EBT	EBR	WBL	WBT	WBR	NBL	NBT	NBR	SBL	SBT	SBR
Lane Configurations												
Traffic Volume (vph)	80	630	10	30	870	20	50	30	10	40	30	80
Future Volume (vph)	80	630	10	30	870	20	50	30	10	40	30	80
Ideal Flow (vphpl)	2100	2100	2100	2100	2100	2100	2100	2100	2100	2100	2100	2100
Total Lost time (s)	4.0	4.0	4.0	4.0	4.0	4.0	4.0	4.0		4.0	4.0	
Lane Util. Factor	0.97	0.95	1.00	1.00	0.95	1.00	1.00	1.00		1.00	1.00	
Frt	1.00	1.00	0.85	1.00	1.00	0.85	1.00	0.96		1.00	0.89	
Flt Protected	0.95	1.00	1.00	0.95	1.00	1.00	0.95	1.00		0.95	1.00	
Satd. Flow (prot)	3000	3093	1384	1467	2934	1312	1956	1982		1956	1834	
Flt Permitted	0.95	1.00	1.00	0.95	1.00	1.00	0.69	1.00		0.73	1.00	
Satd. Flow (perm)	3000	3093	1384	1467	2934	1312	1413	1982		1505	1834	
Peak-hour factor, PHF	1.00	1.00	1.00	1.00	1.00	1.00	1.00	1.00	1.00	1.00	1.00	1.00
Adj. Flow (vph)	80	630	10	30	870	20	50	30	10	40	30	80
RTOR Reduction (vph)	0	0	5	0	0	12	0	7	0	0	55	0
Lane Group Flow (vph)	80	630	5	30	870	8	50	33	0	40	55	0
Heavy Vehicles (%)	29%	29%	29%	36%	36%	36%	2%	2%	2%	2%	2%	2%
Turn Type	Prot	NA	Perm	Prot	NA	Perm	Perm	NA		Perm	NA	
Protected Phases	7	4		3	8			2			6	
Permitted Phases			4			8	2			6		
Actuated Green, G (s)	5.8	29.7	29.7	2.9	26.8	26.8	19.5	19.5		19.5	19.5	
Effective Green, g (s)	5.8	29.7	29.7	2.9	26.8	26.8	19.5	19.5		19.5	19.5	
Actuated g/C Ratio	0.09	0.46	0.46	0.05	0.42	0.42	0.30	0.30		0.30	0.30	
Clearance Time (s)	4.0	4.0	4.0	4.0	4.0	4.0	4.0	4.0		4.0	4.0	
Vehicle Extension (s)	3.0	3.0	3.0	3.0	3.0	3.0	3.0	3.0		3.0	3.0	
Lane Grp Cap (vph)	271	1433	641	66	1226	548	429	602		457	557	
v/s Ratio Prot	0.03	c0.20		c0.02	c0.30			0.02			0.03	
v/s Ratio Perm			0.00			0.01	c0.04			0.03		
v/c Ratio	0.30	0.44	0.01	0.45	0.71	0.02	0.12	0.05		0.09	0.10	
Uniform Delay, d1	27.2	11.6	9.3	29.8	15.4	10.9	16.1	15.8		15.9	16.0	
Progression Factor	1.00	1.00	1.00	1.00	1.00	1.00	1.00	1.00		1.00	1.00	
Incremental Delay, d2	0.6	0.2	0.0	4.9	1.9	0.0	0.6	0.2		0.4	0.4	
Delay (s)	27.9	11.8	9.3	34.7	17.3	10.9	16.6	16.0		16.3	16.4	
Level of Service	C	B	A	C	B	B	B	B		B	B	
Approach Delay (s)		13.6			17.8			16.3			16.3	
Approach LOS		B			B			B			B	

Intersection Summary			
HCM 2000 Control Delay	16.0	HCM 2000 Level of Service	B
HCM 2000 Volume to Capacity ratio	0.44		
Actuated Cycle Length (s)	64.1	Sum of lost time (s)	12.0
Intersection Capacity Utilization	44.3%	ICU Level of Service	A
Analysis Period (min)	15		
c Critical Lane Group			

Movement	EBL	EBT	EBR	WBL	WBT	WBR	NBL	NBT	NBR	SBL	SBT	SBR
Lane Configurations												
Traffic Volume (veh/h)	0	600	80	0	890	40	0	0	10	0	0	20
Future Volume (Veh/h)	0	600	80	0	890	40	0	0	10	0	0	20
Sign Control		Free			Free			Stop			Stop	
Grade		0%			0%			0%			0%	
Peak Hour Factor	1.00	1.00	1.00	1.00	1.00	1.00	1.00	1.00	1.00	1.00	1.00	1.00
Hourly flow rate (vph)	0	600	80	0	890	40	0	0	10	0	0	20
Pedestrians												
Lane Width (ft)												
Walking Speed (ft/s)												
Percent Blockage												
Right turn flare (veh)												
Median type		None			None							
Median storage veh)												
Upstream signal (ft)												
pX, platoon unblocked												
vC, conflicting volume	930			680			1105	1570	340	1220	1590	465
vC1, stage 1 conf vol												
vC2, stage 2 conf vol												
vCu, unblocked vol	930			680			1105	1570	340	1220	1590	465
tC, single (s)	4.6			4.8			7.5	6.5	6.9	7.5	6.5	6.9
tC, 2 stage (s)												
tF (s)	2.5			2.6			3.5	4.0	3.3	3.5	4.0	3.3
p0 queue free %	100			100			100	100	98	100	100	96
cM capacity (veh/h)	599			714			159	110	656	134	107	544

Direction, Lane #	EB 1	EB 2	WB 1	WB 2	NB 1	SB 1
Volume Total	400	280	593	337	10	20
Volume Left	0	0	0	0	0	0
Volume Right	0	80	0	40	10	20
cSH	1700	1700	1700	1700	656	544
Volume to Capacity	0.24	0.16	0.35	0.20	0.02	0.04
Queue Length 95th (ft)	0	0	0	0	1	3
Control Delay (s)	0.0	0.0	0.0	0.0	10.6	11.9
Lane LOS					B	B
Approach Delay (s)	0.0		0.0		10.6	11.9
Approach LOS					B	B

Intersection Summary			
Average Delay	0.2		
Intersection Capacity Utilization	33.4%	ICU Level of Service	A
Analysis Period (min)	15		

Intersection	
Int Delay, s/veh	0.2

Movement	EBL	EBT	EBR	WBL	WBT	WBR	NBL	NBT	NBR	SBL	SBT	SBR
Traffic Vol, veh/h	0	600	80	0	890	40	0	0	10	0	0	20
Future Vol, veh/h	0	600	80	0	890	40	0	0	10	0	0	20
Conflicting Peds, #/hr	0	0	0	0	0	0	0	0	0	0	0	0
Sign Control	Free	Free	Free	Free	Free	Free	Stop	Stop	Stop	Stop	Stop	Stop
RT Channelized	-	-	None	-	-	None	-	-	None	-	-	None
Storage Length	-	-	-	-	-	-	-	-	0	-	-	0
Veh in Median Storage, #	-	0	-	-	0	-	-	0	-	-	0	-
Grade, %	-	0	-	-	0	-	-	0	-	-	0	-
Peak Hour Factor	100	100	100	100	100	100	100	100	100	100	100	100
Heavy Vehicles, %	26	26	26	36	36	36	2	2	2	2	2	2
Mvmt Flow	0	600	80	0	890	40	0	0	10	0	0	20

Major/Minor	Major1			Major2			Minor1			Minor2		
Conflicting Flow All	930	0	0	680	0	0	1085	1570	340	1210	1590	465
Stage 1	-	-	-	-	-	-	640	640	-	910	910	-
Stage 2	-	-	-	-	-	-	445	930	-	300	680	-
Critical Hdwy	4.62	-	-	4.82	-	-	7.54	6.54	6.94	7.54	6.54	6.94
Critical Hdwy Stg 1	-	-	-	-	-	-	6.54	5.54	-	6.54	5.54	-
Critical Hdwy Stg 2	-	-	-	-	-	-	6.54	5.54	-	6.54	5.54	-
Follow-up Hdwy	2.46	-	-	2.56	-	-	3.52	4.02	3.32	3.52	4.02	3.32
Pot Cap-1 Maneuver	599	-	-	714	-	-	171	110	656	138	107	544
Stage 1	-	-	-	-	-	-	430	468	-	296	352	-
Stage 2	-	-	-	-	-	-	562	344	-	684	449	-
Platoon blocked, %		-	-		-	-						
Mov Cap-1 Maneuver	599	-	-	714	-	-	165	110	656	136	107	544
Mov Cap-2 Maneuver	-	-	-	-	-	-	165	110	-	136	107	-
Stage 1	-	-	-	-	-	-	430	468	-	296	352	-
Stage 2	-	-	-	-	-	-	541	344	-	674	449	-

Approach	EB	WB	NB	SB
HCM Control Delay, s	0	0	10.6	11.9
HCM LOS			B	B

Minor Lane/Major Mvmt	NBLn1	EBL	EBT	EBR	WBL	WBT	WBR	SBLn1
Capacity (veh/h)	656	599	-	-	714	-	-	544
HCM Lane V/C Ratio	0.015	-	-	-	-	-	-	0.037
HCM Control Delay (s)	10.6	0	-	-	0	-	-	11.9
HCM Lane LOS	B	A	-	-	A	-	-	B
HCM 95th %tile Q(veh)	0	0	-	-	0	-	-	0.1

Movement	EBL	EBT	EBR	WBL	WBT	WBR	NBL	NBT	NBR	SBL	SBT	SBR
Lane Configurations												
Traffic Volume (veh/h)	0	610	10	0	920	20	0	0	10	0	0	10
Future Volume (Veh/h)	0	610	10	0	920	20	0	0	10	0	0	10
Sign Control		Free			Free			Stop			Stop	
Grade		0%			0%			0%			0%	
Peak Hour Factor	1.00	1.00	1.00	1.00	1.00	1.00	1.00	1.00	1.00	1.00	1.00	1.00
Hourly flow rate (vph)	0	610	10	0	920	20	0	0	10	0	0	10
Pedestrians												
Lane Width (ft)												
Walking Speed (ft/s)												
Percent Blockage												
Right turn flare (veh)												
Median type		None			None							
Median storage veh)												
Upstream signal (ft)												
pX, platoon unblocked												
vC, conflicting volume	940			620			1085	1555	310	1245	1550	470
vC1, stage 1 conf vol												
vC2, stage 2 conf vol												
vCu, unblocked vol	940			620			1085	1555	310	1245	1550	470
tC, single (s)	4.6			4.8			7.5	6.5	6.9	7.5	6.5	6.9
tC, 2 stage (s)												
tF (s)	2.5			2.6			3.5	4.0	3.3	3.5	4.0	3.3
p0 queue free %	100			100			100	100	99	100	100	98
cM capacity (veh/h)	594			758			168	112	686	128	113	540

Direction, Lane #	EB 1	EB 2	WB 1	WB 2	NB 1	SB 1
Volume Total	407	213	613	327	10	10
Volume Left	0	0	0	0	0	0
Volume Right	0	10	0	20	10	10
cSH	1700	1700	1700	1700	686	540
Volume to Capacity	0.24	0.13	0.36	0.19	0.01	0.02
Queue Length 95th (ft)	0	0	0	0	1	1
Control Delay (s)	0.0	0.0	0.0	0.0	10.3	11.8
Lane LOS					B	B
Approach Delay (s)	0.0		0.0		10.3	11.8
Approach LOS					B	B

Intersection Summary			
Average Delay	0.1		
Intersection Capacity Utilization	33.6%	ICU Level of Service	A
Analysis Period (min)	15		

Intersection	
Int Delay, s/veh	0.1

Movement	EBL	EBT	EBR	WBL	WBT	WBR	NBL	NBT	NBR	SBL	SBT	SBR
Traffic Vol, veh/h	0	610	10	0	920	20	0	0	10	0	0	10
Future Vol, veh/h	0	610	10	0	920	20	0	0	10	0	0	10
Conflicting Peds, #/hr	0	0	0	0	0	0	0	0	0	0	0	0
Sign Control	Free	Free	Free	Free	Free	Free	Stop	Stop	Stop	Stop	Stop	Stop
RT Channelized	-	-	None	-	-	None	-	-	None	-	-	None
Storage Length	-	-	-	-	-	-	-	-	0	-	-	0
Veh in Median Storage, #	-	0	-	-	0	-	-	0	-	-	0	-
Grade, %	-	0	-	-	0	-	-	0	-	-	0	-
Peak Hour Factor	100	100	100	100	100	100	100	100	100	100	100	100
Heavy Vehicles, %	26	26	26	36	36	36	2	2	2	2	2	2
Mvmt Flow	0	610	10	0	920	20	0	0	10	0	0	10

Major/Minor	Major1			Major2			Minor1			Minor2		
Conflicting Flow All	940	0	0	620	0	0	1075	1555	310	1235	1550	470
Stage 1	-	-	-	-	-	-	615	615	-	930	930	-
Stage 2	-	-	-	-	-	-	460	940	-	305	620	-
Critical Hdwy	4.62	-	-	4.82	-	-	7.54	6.54	6.94	7.54	6.54	6.94
Critical Hdwy Stg 1	-	-	-	-	-	-	6.54	5.54	-	6.54	5.54	-
Critical Hdwy Stg 2	-	-	-	-	-	-	6.54	5.54	-	6.54	5.54	-
Follow-up Hdwy	2.46	-	-	2.56	-	-	3.52	4.02	3.32	3.52	4.02	3.32
Pot Cap-1 Maneuver	594	-	-	758	-	-	174	112	686	133	113	540
Stage 1	-	-	-	-	-	-	445	480	-	287	344	-
Stage 2	-	-	-	-	-	-	551	340	-	680	478	-
Platoon blocked, %		-	-		-	-						
Mov Cap-1 Maneuver	594	-	-	758	-	-	171	112	686	131	113	540
Mov Cap-2 Maneuver	-	-	-	-	-	-	171	112	-	131	113	-
Stage 1	-	-	-	-	-	-	445	480	-	287	344	-
Stage 2	-	-	-	-	-	-	541	340	-	670	478	-

Approach	EB	WB	NB	SB
HCM Control Delay, s	0	0	10.3	11.8
HCM LOS			B	B

Minor Lane/Major Mvmt	NBLn1	EBL	EBT	EBR	WBL	WBT	WBR	SBLn1
Capacity (veh/h)	686	594	-	-	758	-	-	540
HCM Lane V/C Ratio	0.015	-	-	-	-	-	-	0.019
HCM Control Delay (s)	10.3	0	-	-	0	-	-	11.8
HCM Lane LOS	B	A	-	-	A	-	-	B
HCM 95th %tile Q(veh)	0	0	-	-	0	-	-	0.1

Movement	EBL	EBT	EBR	WBL	WBT	WBR	NBL	NBT	NBR	SBL	SBT	SBR
Lane Configurations												
Traffic Volume (vph)	50	560	30	10	800	20	90	50	10	20	40	40
Future Volume (vph)	50	560	30	10	800	20	90	50	10	20	40	40
Ideal Flow (vphpl)	2100	2100	2100	2100	2100	2100	2100	2100	2100	2100	2100	2100
Total Lost time (s)	4.0	4.0	4.0	4.0	4.0	4.0	4.0	4.0		4.0	4.0	4.0
Lane Util. Factor	1.00	0.95	1.00	1.00	0.95	1.00	1.00	1.00		1.00	1.00	1.00
Frt	1.00	1.00	0.85	1.00	1.00	0.85	1.00	0.97		1.00	1.00	0.85
Flt Protected	0.95	1.00	1.00	0.95	1.00	1.00	0.95	1.00		0.95	1.00	1.00
Satd. Flow (prot)	1583	3167	1417	1467	2934	1312	1956	2007		1956	2059	1750
Flt Permitted	0.95	1.00	1.00	0.95	1.00	1.00	0.73	1.00		0.72	1.00	1.00
Satd. Flow (perm)	1583	3167	1417	1467	2934	1312	1505	2007		1478	2059	1750
Peak-hour factor, PHF	1.00	1.00	1.00	1.00	1.00	1.00	1.00	1.00	1.00	1.00	1.00	1.00
Adj. Flow (vph)	50	560	30	10	800	20	90	50	10	20	40	40
RTOR Reduction (vph)	0	0	17	0	0	12	0	7	0	0	0	27
Lane Group Flow (vph)	50	560	13	10	800	8	90	53	0	20	40	13
Heavy Vehicles (%)	26%	26%	26%	36%	36%	36%	2%	2%	2%	2%	2%	2%
Turn Type	Prot	NA	Perm	Prot	NA	Perm	Perm	NA		Perm	NA	Perm
Protected Phases	7	4		3	8			2			6	
Permitted Phases			4			8	2			6		6
Actuated Green, G (s)	3.6	24.4	24.4	0.6	21.4	21.4	17.9	17.9		17.9	17.9	17.9
Effective Green, g (s)	3.6	24.4	24.4	0.6	21.4	21.4	17.9	17.9		17.9	17.9	17.9
Actuated g/C Ratio	0.07	0.44	0.44	0.01	0.39	0.39	0.33	0.33		0.33	0.33	0.33
Clearance Time (s)	4.0	4.0	4.0	4.0	4.0	4.0	4.0	4.0		4.0	4.0	4.0
Vehicle Extension (s)	3.0	3.0	3.0	3.0	3.0	3.0	3.0	3.0		3.0	3.0	3.0
Lane Grp Cap (vph)	103	1407	629	16	1143	511	490	654		481	671	570
v/s Ratio Prot	c0.03	c0.18		0.01	c0.27			0.03			0.02	
v/s Ratio Perm			0.01			0.01	c0.06			0.01		0.01
v/c Ratio	0.49	0.40	0.02	0.62	0.70	0.02	0.18	0.08		0.04	0.06	0.02
Uniform Delay, d1	24.8	10.3	8.6	27.0	14.1	10.3	13.3	12.8		12.6	12.7	12.6
Progression Factor	1.00	1.00	1.00	1.00	1.00	1.00	1.00	1.00		1.00	1.00	1.00
Incremental Delay, d2	3.6	0.2	0.0	57.6	1.9	0.0	0.8	0.2		0.2	0.2	0.1
Delay (s)	28.3	10.5	8.6	84.6	16.0	10.3	14.1	13.1		12.8	12.9	12.6
Level of Service	C	B	A	F	B	B	B	B		B	B	B
Approach Delay (s)		11.8			16.6			13.7			12.8	
Approach LOS		B			B			B			B	

Intersection Summary			
HCM 2000 Control Delay	14.4	HCM 2000 Level of Service	B
HCM 2000 Volume to Capacity ratio	0.45		
Actuated Cycle Length (s)	54.9	Sum of lost time (s)	12.0
Intersection Capacity Utilization	44.5%	ICU Level of Service	A
Analysis Period (min)	15		
c Critical Lane Group			

Movement	EBL	EBT	EBR	WBL	WBT	WBR	NBL	NBT	NBR	SBL	SBT	SBR
Lane Configurations												
Traffic Volume (veh/h)	0	570	10	0	820	10	0	0	10	0	0	10
Future Volume (Veh/h)	0	570	10	0	820	10	0	0	10	0	0	10
Sign Control		Free			Free			Stop			Stop	
Grade		0%			0%			0%			0%	
Peak Hour Factor	1.00	1.00	1.00	1.00	1.00	1.00	1.00	1.00	1.00	1.00	1.00	1.00
Hourly flow rate (vph)	0	570	10	0	820	10	0	0	10	0	0	10
Pedestrians												
Lane Width (ft)												
Walking Speed (ft/s)												
Percent Blockage												
Right turn flare (veh)												
Median type		None			None							
Median storage veh)												
Upstream signal (ft)												
pX, platoon unblocked												
vC, conflicting volume	830			580			995	1405	290	1120	1405	415
vC1, stage 1 conf vol												
vC2, stage 2 conf vol												
vCu, unblocked vol	830			580			995	1405	290	1120	1405	415
tC, single (s)	4.1			4.1			7.5	6.5	6.9	7.5	6.5	6.9
tC, 2 stage (s)												
tF (s)	2.2			2.2			3.5	4.0	3.3	3.5	4.0	3.3
p0 queue free %	100			100			100	100	99	100	100	98
cM capacity (veh/h)	798			990			196	138	707	159	138	586

Direction, Lane #	EB 1	EB 2	WB 1	WB 2	NB 1	SB 1
Volume Total	380	200	547	283	10	10
Volume Left	0	0	0	0	0	0
Volume Right	0	10	0	10	10	10
cSH	1700	1700	1700	1700	707	586
Volume to Capacity	0.22	0.12	0.32	0.17	0.01	0.02
Queue Length 95th (ft)	0	0	0	0	1	1
Control Delay (s)	0.0	0.0	0.0	0.0	10.2	11.2
Lane LOS					B	B
Approach Delay (s)	0.0		0.0		10.2	11.2
Approach LOS					B	B

Intersection Summary			
Average Delay	0.1		
Intersection Capacity Utilization	30.8%	ICU Level of Service	A
Analysis Period (min)	15		

Intersection	
Int Delay, s/veh	0.2

Movement	EBL	EBT	EBR	WBL	WBT	WBR	NBL	NBT	NBR	SBL	SBT	SBR
Traffic Vol, veh/h	0	570	10	0	820	10	0	0	10	0	0	10
Future Vol, veh/h	0	570	10	0	820	10	0	0	10	0	0	10
Conflicting Peds, #/hr	0	0	0	0	0	0	0	0	0	0	0	0
Sign Control	Free	Free	Free	Free	Free	Free	Stop	Stop	Stop	Stop	Stop	Stop
RT Channelized	-	-	None	-	-	None	-	-	None	-	-	None
Storage Length	-	-	-	-	-	-	-	-	0	-	-	0
Veh in Median Storage, #	-	0	-	-	0	-	-	0	-	-	0	-
Grade, %	-	0	-	-	0	-	-	0	-	-	0	-
Peak Hour Factor	100	100	100	100	100	100	100	100	100	100	100	100
Heavy Vehicles, %	2	2	2	2	2	2	2	2	2	2	2	2
Mvmt Flow	0	570	10	0	820	10	0	0	10	0	0	10

Major/Minor	Major1			Major2			Minor1			Minor2		
Conflicting Flow All	830	0	0	580	0	0	985	1405	290	1110	1405	415
Stage 1	-	-	-	-	-	-	575	575	-	825	825	-
Stage 2	-	-	-	-	-	-	410	830	-	285	580	-
Critical Hdwy	4.14	-	-	4.14	-	-	7.54	6.54	6.94	7.54	6.54	6.94
Critical Hdwy Stg 1	-	-	-	-	-	-	6.54	5.54	-	6.54	5.54	-
Critical Hdwy Stg 2	-	-	-	-	-	-	6.54	5.54	-	6.54	5.54	-
Follow-up Hdwy	2.22	-	-	2.22	-	-	3.52	4.02	3.32	3.52	4.02	3.32
Pot Cap-1 Maneuver	798	-	-	990	-	-	202	138	707	164	138	586
Stage 1	-	-	-	-	-	-	470	501	-	333	385	-
Stage 2	-	-	-	-	-	-	589	383	-	698	498	-
Platoon blocked, %		-	-		-	-						
Mov Cap-1 Maneuver	798	-	-	990	-	-	199	138	707	162	138	586
Mov Cap-2 Maneuver	-	-	-	-	-	-	199	138	-	162	138	-
Stage 1	-	-	-	-	-	-	470	501	-	333	385	-
Stage 2	-	-	-	-	-	-	579	383	-	688	498	-

Approach	EB	WB	NB	SB
HCM Control Delay, s	0	0	10.2	11.3
HCM LOS			B	B

Minor Lane/Major Mvmt	NBLn1	EBL	EBT	EBR	WBL	WBT	WBR	SBLn1
Capacity (veh/h)	707	798	-	-	990	-	-	586
HCM Lane V/C Ratio	0.014	-	-	-	-	-	-	0.017
HCM Control Delay (s)	10.2	0	-	-	0	-	-	11.3
HCM Lane LOS	B	A	-	-	A	-	-	B
HCM 95th %tile Q(veh)	0	0	-	-	0	-	-	0.1

Movement	EBL	EBT	EBR	WBL	WBT	WBR	NBL	NBT	NBR	SBL	SBT	SBR
Lane Configurations												
Traffic Volume (veh/h)	0	570	10	0	820	10	0	0	10	0	0	10
Future Volume (Veh/h)	0	570	10	0	820	10	0	0	10	0	0	10
Sign Control		Free			Free			Stop			Stop	
Grade		0%			0%			0%			0%	
Peak Hour Factor	1.00	1.00	1.00	1.00	1.00	1.00	1.00	1.00	1.00	1.00	1.00	1.00
Hourly flow rate (vph)	0	570	10	0	820	10	0	0	10	0	0	10
Pedestrians												
Lane Width (ft)												
Walking Speed (ft/s)												
Percent Blockage												
Right turn flare (veh)												
Median type		None			None							
Median storage veh)												
Upstream signal (ft)												
pX, platoon unblocked												
vC, conflicting volume	830			580			995	1405	290	1120	1405	415
vC1, stage 1 conf vol												
vC2, stage 2 conf vol												
vCu, unblocked vol	830			580			995	1405	290	1120	1405	415
tC, single (s)	4.6			4.8			7.5	6.5	6.9	7.5	6.5	6.9
tC, 2 stage (s)												
tF (s)	2.5			2.6			3.5	4.0	3.3	3.5	4.0	3.3
p0 queue free %	100			100			100	100	99	100	100	98
cM capacity (veh/h)	661			789			196	138	707	159	138	586

Direction, Lane #	EB 1	EB 2	WB 1	WB 2	NB 1	SB 1
Volume Total	380	200	547	283	10	10
Volume Left	0	0	0	0	0	0
Volume Right	0	10	0	10	10	10
cSH	1700	1700	1700	1700	707	586
Volume to Capacity	0.22	0.12	0.32	0.17	0.01	0.02
Queue Length 95th (ft)	0	0	0	0	1	1
Control Delay (s)	0.0	0.0	0.0	0.0	10.2	11.2
Lane LOS					B	B
Approach Delay (s)	0.0		0.0		10.2	11.2
Approach LOS					B	B

Intersection Summary			
Average Delay	0.1		
Intersection Capacity Utilization	30.8%	ICU Level of Service	A
Analysis Period (min)	15		

Intersection	
Int Delay, s/veh	0.2

Movement	EBL	EBT	EBR	WBL	WBT	WBR	NBL	NBT	NBR	SBL	SBT	SBR
Traffic Vol, veh/h	0	570	10	0	820	10	0	0	10	0	0	10
Future Vol, veh/h	0	570	10	0	820	10	0	0	10	0	0	10
Conflicting Peds, #/hr	0	0	0	0	0	0	0	0	0	0	0	0
Sign Control	Free	Free	Free	Free	Free	Free	Stop	Stop	Stop	Stop	Stop	Stop
RT Channelized	-	-	None	-	-	None	-	-	None	-	-	None
Storage Length	-	-	-	-	-	-	-	-	0	-	-	0
Veh in Median Storage, #	-	0	-	-	0	-	-	0	-	-	0	-
Grade, %	-	0	-	-	0	-	-	0	-	-	0	-
Peak Hour Factor	100	100	100	100	100	100	100	100	100	100	100	100
Heavy Vehicles, %	26	26	26	36	36	36	2	2	2	2	2	2
Mvmt Flow	0	570	10	0	820	10	0	0	10	0	0	10

Major/Minor	Major1			Major2			Minor1			Minor2		
Conflicting Flow All	830	0	0	580	0	0	985	1405	290	1110	1405	415
Stage 1	-	-	-	-	-	-	575	575	-	825	825	-
Stage 2	-	-	-	-	-	-	410	830	-	285	580	-
Critical Hdwy	4.62	-	-	4.82	-	-	7.54	6.54	6.94	7.54	6.54	6.94
Critical Hdwy Stg 1	-	-	-	-	-	-	6.54	5.54	-	6.54	5.54	-
Critical Hdwy Stg 2	-	-	-	-	-	-	6.54	5.54	-	6.54	5.54	-
Follow-up Hdwy	2.46	-	-	2.56	-	-	3.52	4.02	3.32	3.52	4.02	3.32
Pot Cap-1 Maneuver	661	-	-	789	-	-	202	138	707	164	138	586
Stage 1	-	-	-	-	-	-	470	501	-	333	385	-
Stage 2	-	-	-	-	-	-	589	383	-	698	498	-
Platoon blocked, %		-	-		-	-						
Mov Cap-1 Maneuver	661	-	-	789	-	-	199	138	707	162	138	586
Mov Cap-2 Maneuver	-	-	-	-	-	-	199	138	-	162	138	-
Stage 1	-	-	-	-	-	-	470	501	-	333	385	-
Stage 2	-	-	-	-	-	-	579	383	-	688	498	-

Approach	EB	WB	NB	SB
HCM Control Delay, s	0	0	10.2	11.3
HCM LOS			B	B

Minor Lane/Major Mvmt	NBLn1	EBL	EBT	EBR	WBL	WBT	WBR	SBLn1
Capacity (veh/h)	707	661	-	-	789	-	-	586
HCM Lane V/C Ratio	0.014	-	-	-	-	-	-	0.017
HCM Control Delay (s)	10.2	0	-	-	0	-	-	11.3
HCM Lane LOS	B	A	-	-	A	-	-	B
HCM 95th %tile Q(veh)	0	0	-	-	0	-	-	0.1

Movement	EBL	EBT	EBR	WBL	WBT	WBR	NBL	NBT	NBR	SBL	SBT	SBR
Lane Configurations												
Traffic Volume (vph)	0	190	390	20	590	0	0	0	0	30	0	240
Future Volume (vph)	0	190	390	20	590	0	0	0	0	30	0	240
Ideal Flow (vphpl)	2100	2100	2100	2100	2100	2100	2100	2100	2100	2100	2100	2100
Total Lost time (s)		4.0	4.0	4.0	4.0						4.0	4.0
Lane Util. Factor		0.95	1.00	1.00	0.95						1.00	1.00
Frt		1.00	0.85	1.00	1.00						1.00	0.85
Flt Protected		1.00	1.00	0.95	1.00						0.95	1.00
Satd. Flow (prot)		2891	1293	1385	2771						1446	1240
Flt Permitted		1.00	1.00	0.95	1.00						0.95	1.00
Satd. Flow (perm)		2891	1293	1385	2771						1446	1240
Peak-hour factor, PHF	1.00	1.00	1.00	1.00	1.00	1.00	1.00	1.00	1.00	1.00	1.00	1.00
Adj. Flow (vph)	0	190	390	20	590	0	0	0	0	30	0	240
RTOR Reduction (vph)	0	0	249	0	0	0	0	0	0	0	0	173
Lane Group Flow (vph)	0	190	141	20	590	0	0	0	0	0	30	67
Heavy Vehicles (%)	38%	38%	38%	44%	44%	44%	2%	2%	2%	38%	2%	44%
Turn Type		NA	Perm	Prot	NA					Perm	NA	Perm
Protected Phases		4		3	8						6	
Permitted Phases			4							6		6
Actuated Green, G (s)		11.3	11.3	0.5	15.8						7.5	7.5
Effective Green, g (s)		11.3	11.3	0.5	15.8						7.5	7.5
Actuated g/C Ratio		0.36	0.36	0.02	0.50						0.24	0.24
Clearance Time (s)		4.0	4.0	4.0	4.0						4.0	4.0
Vehicle Extension (s)		3.0	3.0	3.0	3.0						3.0	3.0
Lane Grp Cap (vph)		1043	466	22	1398						346	297
v/s Ratio Prot		0.07		0.01	c0.21							
v/s Ratio Perm			0.11								0.02	c0.05
v/c Ratio		0.18	0.30	0.91	0.42						0.09	0.22
Uniform Delay, d1		6.8	7.2	15.4	4.9						9.2	9.6
Progression Factor		1.00	1.00	1.00	1.00						1.00	1.00
Incremental Delay, d2		0.1	0.4	148.5	0.2						0.1	0.4
Delay (s)		6.9	7.5	163.8	5.1						9.3	9.9
Level of Service		A	A	F	A						A	A
Approach Delay (s)		7.3			10.3			0.0			9.9	
Approach LOS		A			B			A			A	

Intersection Summary			
HCM 2000 Control Delay	9.0	HCM 2000 Level of Service	A
HCM 2000 Volume to Capacity ratio	0.43		
Actuated Cycle Length (s)	31.3	Sum of lost time (s)	12.0
Intersection Capacity Utilization	38.5%	ICU Level of Service	A
Analysis Period (min)	15		
c Critical Lane Group			

Movement	EBL	EBT	EBR	WBL	WBT	WBR	NBL	NBT	NBR	SBL	SBT	SBR
Lane Configurations												
Traffic Volume (vph)	0	90	150	0	180	30	430	0	10	0	0	0
Future Volume (vph)	0	90	150	0	180	30	430	0	10	0	0	0
Ideal Flow (vphpl)	2100	2100	2100	2100	2100	2100	2100	2100	2100	2100	2100	2100
Total Lost time (s)		4.0	4.0		4.0		4.0		4.0			
Lane Util. Factor		0.95	1.00		0.95		1.00		1.00			
Frt		1.00	0.85		0.98		1.00		0.85			
Flt Protected		1.00	1.00		1.00		0.95		1.00			
Satd. Flow (prot)		2891	1293		2711		1385		1750			
Flt Permitted		1.00	1.00		1.00		0.95		1.00			
Satd. Flow (perm)		2891	1293		2711		1385		1750			
Peak-hour factor, PHF	1.00	1.00	1.00	1.00	1.00	1.00	1.00	1.00	1.00	1.00	1.00	1.00
Adj. Flow (vph)	0	90	150	0	180	30	430	0	10	0	0	0
RTOR Reduction (vph)	0	0	115	0	16	0	0	0	5	0	0	0
Lane Group Flow (vph)	0	90	35	0	194	0	430	0	5	0	0	0
Heavy Vehicles (%)	38%	38%	38%	44%	44%	44%	44%	2%	2%	2%	2%	2%
Parking (#/hr)											0	
Turn Type		NA	Perm		NA		Perm		Perm			
Protected Phases		4			8							
Permitted Phases			4				2		2			
Actuated Green, G (s)		7.9	7.9		7.9		17.5		17.5			
Effective Green, g (s)		7.9	7.9		7.9		17.5		17.5			
Actuated g/C Ratio		0.24	0.24		0.24		0.52		0.52			
Clearance Time (s)		4.0	4.0		4.0		4.0		4.0			
Vehicle Extension (s)		3.0	3.0		3.0		3.0		3.0			
Lane Grp Cap (vph)		683	305		641		725		916			
v/s Ratio Prot		0.03			c0.07							
v/s Ratio Perm			0.03				c0.31		0.00			
v/c Ratio		0.13	0.12		0.30		0.59		0.01			
Uniform Delay, d1		10.0	10.0		10.5		5.5		3.8			
Progression Factor		1.00	1.00		1.00		1.00		1.00			
Incremental Delay, d2		0.1	0.2		0.3		1.3		0.0			
Delay (s)		10.1	10.2		10.8		6.8		3.8			
Level of Service		B	B		B		A		A			
Approach Delay (s)		10.2			10.8			6.7			0.0	
Approach LOS		B			B			A			A	

Intersection Summary			
HCM 2000 Control Delay	8.6	HCM 2000 Level of Service	A
HCM 2000 Volume to Capacity ratio	0.50		
Actuated Cycle Length (s)	33.4	Sum of lost time (s)	8.0
Intersection Capacity Utilization	33.6%	ICU Level of Service	A
Analysis Period (min)	15		

c Critical Lane Group

Intersection	
Int Delay, s/veh	0.6

Movement	EBL	EBT	WBT	WBR	SBL	SBR
Vol, veh/h	10	380	410	10	20	10
Conflicting Peds, #/hr	0	0	0	0	0	0
Sign Control	Free	Free	Free	Free	Stop	Stop
RT Channelized	-	None	-	None	-	None
Storage Length	105	-	-	450	0	-
Veh in Median Storage, #	-	0	0	-	0	-
Grade, %	-	0	0	-	0	-
Peak Hour Factor	87	87	87	87	87	87
Heavy Vehicles, %	35	35	41	41	2	2
Mvmt Flow	11	437	471	11	23	11

Major/Minor	Major1		Major2		Minor2	
Conflicting Flow All	471	0	-	0	712	236
Stage 1	-	-	-	-	471	-
Stage 2	-	-	-	-	241	-
Critical Hdwy	4.8	-	-	-	6.84	6.94
Critical Hdwy Stg 1	-	-	-	-	5.84	-
Critical Hdwy Stg 2	-	-	-	-	5.84	-
Follow-up Hdwy	2.55	-	-	-	3.52	3.32
Pot Cap-1 Maneuver	886	-	-	-	367	766
Stage 1	-	-	-	-	594	-
Stage 2	-	-	-	-	776	-
Platoon blocked, %		-	-	-		
Mov Cap-1 Maneuver	886	-	-	-	362	766
Mov Cap-2 Maneuver	-	-	-	-	362	-
Stage 1	-	-	-	-	594	-
Stage 2	-	-	-	-	766	-

Approach	EB	WB	SB
HCM Control Delay, s	0.2	0	13.9
HCM LOS			B

Minor Lane/Major Mvmt	EBL	EBT	WBT	WBR	SBLn1
Capacity (veh/h)	886	-	-	-	439
HCM Lane V/C Ratio	0.013	-	-	-	0.079
HCM Control Delay (s)	9.1	-	-	-	13.9
HCM Lane LOS	A	-	-	-	B
HCM 95th %tile Q(veh)	0	-	-	-	0.3

Intersection	
Int Delay, s/veh	1.6

Movement	EBT	EBR	WBL	WBT	NBL	NBR
Vol, veh/h	310	50	30	310	40	10
Conflicting Peds, #/hr	0	0	0	0	0	0
Sign Control	Free	Free	Free	Free	Stop	Stop
RT Channelized	-	None	-	None	-	None
Storage Length	-	-	450	-	0	-
Veh in Median Storage, #	0	-	-	0	0	-
Grade, %	0	-	-	0	0	-
Peak Hour Factor	79	79	79	79	79	79
Heavy Vehicles, %	35	35	41	41	2	2
Mvmt Flow	392	63	38	392	51	13

Major/Minor	Major1		Major2		Minor1	
Conflicting Flow All	0	0	456	0	892	228
Stage 1	-	-	-	-	424	-
Stage 2	-	-	-	-	468	-
Critical Hdwy	-	-	4.92	-	6.63	6.93
Critical Hdwy Stg 1	-	-	-	-	5.83	-
Critical Hdwy Stg 2	-	-	-	-	5.43	-
Follow-up Hdwy	-	-	2.61	-	3.519	3.319
Pot Cap-1 Maneuver	-	-	869	-	297	775
Stage 1	-	-	-	-	629	-
Stage 2	-	-	-	-	629	-
Platoon blocked, %	-	-		-		
Mov Cap-1 Maneuver	-	-	869	-	284	775
Mov Cap-2 Maneuver	-	-	-	-	284	-
Stage 1	-	-	-	-	629	-
Stage 2	-	-	-	-	601	-

Approach	EB	WB	NB
HCM Control Delay, s	0	0.8	18.7
HCM LOS			C

Minor Lane/Major Mvmt	NBLn1	EBT	EBR	WBL	WBT
Capacity (veh/h)	325	-	-	869	-
HCM Lane V/C Ratio	0.195	-	-	0.044	-
HCM Control Delay (s)	18.7	-	-	9.3	-
HCM Lane LOS	C	-	-	A	-
HCM 95th %tile Q(veh)	0.7	-	-	0.1	-

Intersection	
Int Delay, s/veh	1.5

Movement	EBL	EBT	WBT	WBR	SBL	SBR
Vol, veh/h	60	250	310	20	10	20
Conflicting Peds, #/hr	0	0	0	0	0	0
Sign Control	Free	Free	Free	Free	Stop	Stop
RT Channelized	-	None	-	None	-	None
Storage Length	450	-	-	-	0	-
Veh in Median Storage, #	-	0	0	-	0	-
Grade, %	-	0	0	-	0	-
Peak Hour Factor	72	72	72	72	72	72
Heavy Vehicles, %	30	30	38	38	2	2
Mvmt Flow	83	347	431	28	14	28

Major/Minor	Major1		Major2		Minor2	
Conflicting Flow All	458	0	-	0	958	444
Stage 1	-	-	-	-	444	-
Stage 2	-	-	-	-	514	-
Critical Hdwy	4.4	-	-	-	6.42	6.22
Critical Hdwy Stg 1	-	-	-	-	5.42	-
Critical Hdwy Stg 2	-	-	-	-	5.42	-
Follow-up Hdwy	2.47	-	-	-	3.518	3.318
Pot Cap-1 Maneuver	970	-	-	-	285	614
Stage 1	-	-	-	-	646	-
Stage 2	-	-	-	-	600	-
Platoon blocked, %		-	-	-		
Mov Cap-1 Maneuver	970	-	-	-	261	614
Mov Cap-2 Maneuver	-	-	-	-	261	-
Stage 1	-	-	-	-	646	-
Stage 2	-	-	-	-	549	-

Approach	EB	WB	SB
HCM Control Delay, s	1.8	0	14.4
HCM LOS			B

Minor Lane/Major Mvmt	EBL	EBT	WBT	WBR	SBLn1
Capacity (veh/h)	970	-	-	-	423
HCM Lane V/C Ratio	0.086	-	-	-	0.099
HCM Control Delay (s)	9.1	-	-	-	14.4
HCM Lane LOS	A	-	-	-	B
HCM 95th %tile Q(veh)	0.3	-	-	-	0.3

Intersection	
Int Delay, s/veh	2

Movement	EBL	EBT	WBT	WBR	SBL	SBR
Vol, veh/h	60	180	230	10	10	40
Conflicting Peds, #/hr	0	0	0	0	0	0
Sign Control	Free	Free	Free	Free	Stop	Stop
RT Channelized	-	None	-	None	-	None
Storage Length	450	-	-	-	0	-
Veh in Median Storage, #	-	0	0	-	0	-
Grade, %	-	0	0	-	0	-
Peak Hour Factor	92	92	92	92	92	92
Heavy Vehicles, %	30	30	38	38	2	2
Mvmt Flow	65	196	250	11	11	43

Major/Minor	Major1		Major2		Minor2	
Conflicting Flow All	261	0	-	0	581	255
Stage 1	-	-	-	-	255	-
Stage 2	-	-	-	-	326	-
Critical Hdwy	4.4	-	-	-	6.42	6.22
Critical Hdwy Stg 1	-	-	-	-	5.42	-
Critical Hdwy Stg 2	-	-	-	-	5.42	-
Follow-up Hdwy	2.47	-	-	-	3.518	3.318
Pot Cap-1 Maneuver	1157	-	-	-	476	784
Stage 1	-	-	-	-	788	-
Stage 2	-	-	-	-	731	-
Platoon blocked, %		-	-	-		
Mov Cap-1 Maneuver	1157	-	-	-	449	784
Mov Cap-2 Maneuver	-	-	-	-	449	-
Stage 1	-	-	-	-	788	-
Stage 2	-	-	-	-	690	-

Approach	EB	WB	SB
HCM Control Delay, s	2.1	0	10.7
HCM LOS			B

Minor Lane/Major Mvmt	EBL	EBT	WBT	WBR	SBLn1
Capacity (veh/h)	1157	-	-	-	682
HCM Lane V/C Ratio	0.056	-	-	-	0.08
HCM Control Delay (s)	8.3	-	-	-	10.7
HCM Lane LOS	A	-	-	-	B
HCM 95th %tile Q(veh)	0.2	-	-	-	0.3

Intersection	
Int Delay, s/veh	2.8

Movement	EBL	EBT	WBT	WBR	SBL	SBR
Vol, veh/h	50	150	170	10	10	80
Conflicting Peds, #/hr	0	0	0	0	0	0
Sign Control	Free	Free	Free	Free	Stop	Stop
RT Channelized	-	None	-	None	-	None
Storage Length	450	-	-	-	0	-
Veh in Median Storage, #	-	0	0	-	0	-
Grade, %	-	0	0	-	0	-
Peak Hour Factor	95	95	95	95	95	95
Heavy Vehicles, %	30	30	37	37	2	2
Mvmt Flow	53	158	179	11	11	84

Major/Minor	Major1		Major2		Minor2	
Conflicting Flow All	189	0	-	0	447	184
Stage 1	-	-	-	-	184	-
Stage 2	-	-	-	-	263	-
Critical Hdwy	4.4	-	-	-	6.42	6.22
Critical Hdwy Stg 1	-	-	-	-	5.42	-
Critical Hdwy Stg 2	-	-	-	-	5.42	-
Follow-up Hdwy	2.47	-	-	-	3.518	3.318
Pot Cap-1 Maneuver	1233	-	-	-	569	858
Stage 1	-	-	-	-	848	-
Stage 2	-	-	-	-	781	-
Platoon blocked, %		-	-	-		
Mov Cap-1 Maneuver	1233	-	-	-	545	858
Mov Cap-2 Maneuver	-	-	-	-	545	-
Stage 1	-	-	-	-	848	-
Stage 2	-	-	-	-	747	-

Approach	EB	WB	SB
HCM Control Delay, s	2	0	10.1
HCM LOS			B

Minor Lane/Major Mvmt	EBL	EBT	WBT	WBR	SBLn1
Capacity (veh/h)	1233	-	-	-	807
HCM Lane V/C Ratio	0.043	-	-	-	0.117
HCM Control Delay (s)	8.1	-	-	-	10.1
HCM Lane LOS	A	-	-	-	B
HCM 95th %tile Q(veh)	0.1	-	-	-	0.4

Intersection	
Int Delay, s/veh	1.9

Movement	EBL	EBT	WBT	WBR	SBL	SBR
Vol, veh/h	10	150	180	50	60	10
Conflicting Peds, #/hr	0	0	0	0	0	0
Sign Control	Free	Free	Free	Free	Stop	Stop
RT Channelized	-	None	-	None	-	None
Storage Length	-	-	-	450	0	-
Veh in Median Storage, #	-	0	0	-	0	-
Grade, %	-	0	0	-	0	-
Peak Hour Factor	97	97	97	97	97	97
Heavy Vehicles, %	30	30	37	37	2	2
Mvmt Flow	10	155	186	52	62	10

Major/Minor	Major1		Major2		Minor2	
Conflicting Flow All	186	0	-	0	361	186
Stage 1	-	-	-	-	186	-
Stage 2	-	-	-	-	175	-
Critical Hdwy	4.4	-	-	-	6.42	6.22
Critical Hdwy Stg 1	-	-	-	-	5.42	-
Critical Hdwy Stg 2	-	-	-	-	5.42	-
Follow-up Hdwy	2.47	-	-	-	3.518	3.318
Pot Cap-1 Maneuver	1237	-	-	-	638	856
Stage 1	-	-	-	-	846	-
Stage 2	-	-	-	-	855	-
Platoon blocked, %		-	-	-		
Mov Cap-1 Maneuver	1237	-	-	-	632	856
Mov Cap-2 Maneuver	-	-	-	-	632	-
Stage 1	-	-	-	-	846	-
Stage 2	-	-	-	-	847	-

Approach	EB	WB	SB
HCM Control Delay, s	0.5	0	11.2
HCM LOS			B

Minor Lane/Major Mvmt	EBL	EBT	WBT	WBR	SBLn1
Capacity (veh/h)	1237	-	-	-	657
HCM Lane V/C Ratio	0.008	-	-	-	0.11
HCM Control Delay (s)	7.9	0	-	-	11.2
HCM Lane LOS	A	A	-	-	B
HCM 95th %tile Q(veh)	0	-	-	-	0.4

Intersection	
Int Delay, s/veh	4.5

Movement	EBL	EBT	EBR	WBL	WBT	WBR	NBL	NBT	NBR	SBL	SBT	SBR
Vol, veh/h	20	180	110	20	190	10	20	30	20	10	80	10
Conflicting Peds, #/hr	0	0	0	0	0	0	0	0	0	0	0	0
Sign Control	Free	Free	Free	Free	Free	Free	Stop	Stop	Stop	Stop	Stop	Stop
RT Channelized	-	-	None	-	-	None	-	-	None	-	-	None
Storage Length	-	-	450	450	-	-	-	-	-	-	-	-
Veh in Median Storage, #	-	0	-	-	0	-	-	0	-	-	0	-
Grade, %	-	0	-	-	0	-	-	0	-	-	0	-
Peak Hour Factor	79	79	79	79	79	79	79	79	79	79	79	79
Heavy Vehicles, %	30	30	30	39	39	39	2	2	2	2	2	2
Mvmt Flow	25	228	139	25	241	13	25	38	25	13	101	13

Major/Minor	Major1			Major2			Minor1			Minor2		
Conflicting Flow All	253	0	0	228	0	0	632	582	228	607	575	247
Stage 1	-	-	-	-	-	-	278	278	-	297	297	-
Stage 2	-	-	-	-	-	-	354	304	-	310	278	-
Critical Hdwy	4.4	-	-	4.49	-	-	7.12	6.52	6.22	7.12	6.52	6.22
Critical Hdwy Stg 1	-	-	-	-	-	-	6.12	5.52	-	6.12	5.52	-
Critical Hdwy Stg 2	-	-	-	-	-	-	6.12	5.52	-	6.12	5.52	-
Follow-up Hdwy	2.47	-	-	2.551	-	-	3.518	4.018	3.318	3.518	4.018	3.318
Pot Cap-1 Maneuver	1165	-	-	1150	-	-	393	425	811	408	429	792
Stage 1	-	-	-	-	-	-	728	680	-	712	668	-
Stage 2	-	-	-	-	-	-	663	663	-	700	680	-
Platoon blocked, %		-	-		-	-						
Mov Cap-1 Maneuver	1165	-	-	1150	-	-	302	405	811	354	408	792
Mov Cap-2 Maneuver	-	-	-	-	-	-	302	405	-	354	408	-
Stage 1	-	-	-	-	-	-	708	662	-	693	653	-
Stage 2	-	-	-	-	-	-	539	649	-	622	662	-

Approach	EB	WB	NB	SB
HCM Control Delay, s	0.5	0.7	15.7	17.1
HCM LOS			C	C

Minor Lane/Major Mvmt	NBLn1	EBL	EBT	EBR	WBL	WBT	WBR	SBLn1
Capacity (veh/h)	424	1165	-	-	1150	-	-	422
HCM Lane V/C Ratio	0.209	0.022	-	-	0.022	-	-	0.3
HCM Control Delay (s)	15.7	8.2	0	-	8.2	-	-	17.1
HCM Lane LOS	C	A	A	-	A	-	-	C
HCM 95th %tile Q(veh)	0.8	0.1	-	-	0.1	-	-	1.2

Intersection	
Int Delay, s/veh	3

Movement	EBL	EBT	WBT	WBR	SBL	SBR
Vol, veh/h	20	180	200	50	80	30
Conflicting Peds, #/hr	0	0	0	0	0	0
Sign Control	Free	Free	Free	Free	Stop	Stop
RT Channelized	-	None	-	None	-	None
Storage Length	-	-	-	450	0	-
Veh in Median Storage, #	-	0	0	-	0	-
Grade, %	-	0	0	-	0	-
Peak Hour Factor	79	79	79	79	79	79
Heavy Vehicles, %	30	30	39	39	2	2
Mvmt Flow	25	228	253	63	101	38

Major/Minor	Major1		Major2		Minor2	
Conflicting Flow All	253	0	-	0	531	253
Stage 1	-	-	-	-	253	-
Stage 2	-	-	-	-	278	-
Critical Hdwy	4.4	-	-	-	6.42	6.22
Critical Hdwy Stg 1	-	-	-	-	5.42	-
Critical Hdwy Stg 2	-	-	-	-	5.42	-
Follow-up Hdwy	2.47	-	-	-	3.518	3.318
Pot Cap-1 Maneuver	1165	-	-	-	509	786
Stage 1	-	-	-	-	789	-
Stage 2	-	-	-	-	769	-
Platoon blocked, %		-	-	-		
Mov Cap-1 Maneuver	1165	-	-	-	496	786
Mov Cap-2 Maneuver	-	-	-	-	496	-
Stage 1	-	-	-	-	789	-
Stage 2	-	-	-	-	750	-

Approach	EB	WB	SB
HCM Control Delay, s	0.8	0	13.7
HCM LOS			B

Minor Lane/Major Mvmt	EBL	EBT	WBT	WBR	SBLn1
Capacity (veh/h)	1165	-	-	-	551
HCM Lane V/C Ratio	0.022	-	-	-	0.253
HCM Control Delay (s)	8.2	0	-	-	13.7
HCM Lane LOS	A	A	-	-	B
HCM 95th %tile Q(veh)	0.1	-	-	-	1

Intersection	
Int Delay, s/veh	1

Movement	EBL	EBT	WBT	WBR	SBL	SBR
Vol, veh/h	10	160	220	10	20	10
Conflicting Peds, #/hr	0	0	0	0	0	0
Sign Control	Free	Free	Free	Free	Stop	Stop
RT Channelized	-	None	-	None	-	None
Storage Length	-	-	-	-	0	-
Veh in Median Storage, #	-	0	0	-	0	-
Grade, %	-	0	0	-	0	-
Peak Hour Factor	92	92	92	92	92	92
Heavy Vehicles, %	33	33	41	41	2	2
Mvmt Flow	11	174	239	11	22	11

Major/Minor	Major1		Major2		Minor2	
Conflicting Flow All	250	0	-	0	441	245
Stage 1	-	-	-	-	245	-
Stage 2	-	-	-	-	196	-
Critical Hdwy	4.43	-	-	-	6.42	6.22
Critical Hdwy Stg 1	-	-	-	-	5.42	-
Critical Hdwy Stg 2	-	-	-	-	5.42	-
Follow-up Hdwy	2.497	-	-	-	3.518	3.318
Pot Cap-1 Maneuver	1154	-	-	-	574	794
Stage 1	-	-	-	-	796	-
Stage 2	-	-	-	-	837	-
Platoon blocked, %		-	-	-		
Mov Cap-1 Maneuver	1154	-	-	-	568	794
Mov Cap-2 Maneuver	-	-	-	-	568	-
Stage 1	-	-	-	-	796	-
Stage 2	-	-	-	-	828	-

Approach	EB	WB	SB
HCM Control Delay, s	0.5	0	11
HCM LOS			B

Minor Lane/Major Mvmt	EBL	EBT	WBT	WBR	SBLn1
Capacity (veh/h)	1154	-	-	-	628
HCM Lane V/C Ratio	0.009	-	-	-	0.052
HCM Control Delay (s)	8.1	0	-	-	11
HCM Lane LOS	A	A	-	-	B
HCM 95th %tile Q(veh)	0	-	-	-	0.2

Intersection	
Int Delay, s/veh	2.4

Movement	EBL	EBT	EBR	WBL	WBT	WBR	NBL	NBT	NBR	SBL	SBT	SBR
Vol, veh/h	10	120	30	20	210	10	10	10	20	10	10	10
Conflicting Peds, #/hr	0	0	0	0	0	0	0	0	0	0	0	0
Sign Control	Free	Free	Free	Free	Free	Free	Stop	Stop	Stop	Stop	Stop	Stop
RT Channelized	-	-	None	-	-	None	-	-	None	-	-	None
Storage Length	-	-	450	-	-	-	-	-	-	-	-	-
Veh in Median Storage, #	-	0	-	-	0	-	-	0	-	-	0	-
Grade, %	-	0	-	-	0	-	-	0	-	-	0	-
Peak Hour Factor	74	74	74	74	74	74	74	74	74	74	74	74
Heavy Vehicles, %	33	33	33	41	41	41	2	2	2	2	2	2
Mvmt Flow	14	162	41	27	284	14	14	14	27	14	14	14

Major/Minor	Major1			Major2			Minor1			Minor2		
Conflicting Flow All	297	0	0	162	0	0	547	540	162	554	534	291
Stage 1	-	-	-	-	-	-	189	189	-	345	345	-
Stage 2	-	-	-	-	-	-	358	351	-	209	189	-
Critical Hdwy	4.43	-	-	4.51	-	-	7.12	6.52	6.22	7.12	6.52	6.22
Critical Hdwy Stg 1	-	-	-	-	-	-	6.12	5.52	-	6.12	5.52	-
Critical Hdwy Stg 2	-	-	-	-	-	-	6.12	5.52	-	6.12	5.52	-
Follow-up Hdwy	2.497	-	-	2.569	-	-	3.518	4.018	3.318	3.518	4.018	3.318
Pot Cap-1 Maneuver	1107	-	-	1211	-	-	448	449	883	443	452	748
Stage 1	-	-	-	-	-	-	813	744	-	671	636	-
Stage 2	-	-	-	-	-	-	660	632	-	793	744	-
Platoon blocked, %		-	-		-	-						
Mov Cap-1 Maneuver	1107	-	-	1211	-	-	416	431	883	406	434	748
Mov Cap-2 Maneuver	-	-	-	-	-	-	416	431	-	406	434	-
Stage 1	-	-	-	-	-	-	802	734	-	662	619	-
Stage 2	-	-	-	-	-	-	617	615	-	744	734	-

Approach	EB	WB	NB	SB
HCM Control Delay, s	0.5	0.7	11.9	13
HCM LOS			B	B

Minor Lane/Major Mvmt	NBLn1	EBL	EBT	EBR	WBL	WBT	WBR	SBLn1
Capacity (veh/h)	572	1107	-	-	1211	-	-	491
HCM Lane V/C Ratio	0.095	0.012	-	-	0.022	-	-	0.083
HCM Control Delay (s)	11.9	8.3	0	-	8	0	-	13
HCM Lane LOS	B	A	A	-	A	A	-	B
HCM 95th %tile Q(veh)	0.3	0	-	-	0.1	-	-	0.3

Intersection	
Int Delay, s/veh	2.3

Movement	EBL	EBT	EBR	WBL	WBT	WBR	NBL	NBT	NBR	SBL	SBT	SBR
Vol, veh/h	10	130	10	10	210	10	10	10	10	20	10	10
Conflicting Peds, #/hr	0	0	0	0	0	0	0	0	0	0	0	0
Sign Control	Free	Free	Free	Free	Free	Free	Stop	Stop	Stop	Stop	Stop	Stop
RT Channelized	-	-	None	-	-	None	-	-	None	-	-	None
Storage Length	-	-	-	-	-	-	-	-	-	-	-	-
Veh in Median Storage, #	-	0	-	-	0	-	-	0	-	-	0	-
Grade, %	-	0	-	-	0	-	-	0	-	-	0	-
Peak Hour Factor	79	79	79	79	79	79	79	79	79	79	79	79
Heavy Vehicles, %	31	31	31	39	39	39	2	2	2	2	2	2
Mvmt Flow	13	165	13	13	266	13	13	13	13	25	13	13

Major/Minor	Major1			Major2			Minor1			Minor2		
Conflicting Flow All	278	0	0	177	0	0	506	500	171	506	500	272
Stage 1	-	-	-	-	-	-	196	196	-	297	297	-
Stage 2	-	-	-	-	-	-	310	304	-	209	203	-
Critical Hdwy	4.41	-	-	4.49	-	-	7.12	6.52	6.22	7.12	6.52	6.22
Critical Hdwy Stg 1	-	-	-	-	-	-	6.12	5.52	-	6.12	5.52	-
Critical Hdwy Stg 2	-	-	-	-	-	-	6.12	5.52	-	6.12	5.52	-
Follow-up Hdwy	2.479	-	-	2.551	-	-	3.518	4.018	3.318	3.518	4.018	3.318
Pot Cap-1 Maneuver	1135	-	-	1204	-	-	477	473	873	477	473	767
Stage 1	-	-	-	-	-	-	806	739	-	712	668	-
Stage 2	-	-	-	-	-	-	700	663	-	793	733	-
Platoon blocked, %		-	-		-	-						
Mov Cap-1 Maneuver	1135	-	-	1204	-	-	450	461	873	451	461	767
Mov Cap-2 Maneuver	-	-	-	-	-	-	450	461	-	451	461	-
Stage 1	-	-	-	-	-	-	796	729	-	703	659	-
Stage 2	-	-	-	-	-	-	666	654	-	758	723	-

Approach	EB	WB	NB	SB
HCM Control Delay, s	0.5	0.3	12.1	12.9
HCM LOS			B	B

Minor Lane/Major Mvmt	NBLn1	EBL	EBT	EBR	WBL	WBT	WBR	SBLn1
Capacity (veh/h)	542	1135	-	-	1204	-	-	506
HCM Lane V/C Ratio	0.07	0.011	-	-	0.011	-	-	0.1
HCM Control Delay (s)	12.1	8.2	0	-	8	0	-	12.9
HCM Lane LOS	B	A	A	-	A	A	-	B
HCM 95th %tile Q(veh)	0.2	0	-	-	0	-	-	0.3

Intersection	
Int Delay, s/veh	4.6

Movement	EBL	EBT	EBR	WBL	WBT	WBR	NBL	NBT	NBR	SBL	SBT	SBR
Vol, veh/h	20	120	20	10	180	40	10	20	10	50	20	40
Conflicting Peds, #/hr	0	0	0	0	0	0	0	0	0	0	0	0
Sign Control	Free	Free	Free	Free	Free	Free	Stop	Stop	Stop	Stop	Stop	Stop
RT Channelized	-	-	None	-	-	None	-	-	None	-	-	None
Storage Length	-	-	-	-	-	450	-	-	-	-	-	-
Veh in Median Storage, #	-	0	-	-	0	-	-	0	-	-	0	-
Grade, %	-	0	-	-	0	-	-	0	-	-	0	-
Peak Hour Factor	72	72	72	72	72	72	72	72	72	72	72	72
Heavy Vehicles, %	31	31	31	39	39	39	2	2	2	2	2	2
Mvmt Flow	28	167	28	14	250	56	14	28	14	69	28	56

Major/Minor	Major1			Major2			Minor1			Minor2		
Conflicting Flow All	250	0	0	194	0	0	555	514	181	535	528	250
Stage 1	-	-	-	-	-	-	236	236	-	278	278	-
Stage 2	-	-	-	-	-	-	319	278	-	257	250	-
Critical Hdwy	4.41	-	-	4.49	-	-	7.12	6.52	6.22	7.12	6.52	6.22
Critical Hdwy Stg 1	-	-	-	-	-	-	6.12	5.52	-	6.12	5.52	-
Critical Hdwy Stg 2	-	-	-	-	-	-	6.12	5.52	-	6.12	5.52	-
Follow-up Hdwy	2.479	-	-	2.551	-	-	3.518	4.018	3.318	3.518	4.018	3.318
Pot Cap-1 Maneuver	1164	-	-	1186	-	-	442	464	862	456	456	789
Stage 1	-	-	-	-	-	-	767	710	-	728	680	-
Stage 2	-	-	-	-	-	-	693	680	-	748	700	-
Platoon blocked, %		-	-		-	-						
Mov Cap-1 Maneuver	1164	-	-	1186	-	-	379	445	862	414	437	789
Mov Cap-2 Maneuver	-	-	-	-	-	-	379	445	-	414	437	-
Stage 1	-	-	-	-	-	-	746	691	-	708	670	-
Stage 2	-	-	-	-	-	-	609	670	-	687	681	-

Approach	EB	WB	NB	SB
HCM Control Delay, s	1	0.4	13.4	15.2
HCM LOS			B	C

Minor Lane/Major Mvmt	NBLn1	EBL	EBT	EBR	WBL	WBT	WBR	SBLn1
Capacity (veh/h)	482	1164	-	-	1186	-	-	506
HCM Lane V/C Ratio	0.115	0.024	-	-	0.012	-	-	0.302
HCM Control Delay (s)	13.4	8.2	0	-	8.1	0	-	15.2
HCM Lane LOS	B	A	A	-	A	A	-	C
HCM 95th %tile Q(veh)	0.4	0.1	-	-	0	-	-	1.3

Intersection	
Int Delay, s/veh	2.3

Movement	EBL	EBT	EBR	WBL	WBT	WBR	NBL	NBT	NBR	SBL	SBT	SBR
Vol, veh/h	10	150	10	10	210	10	10	10	10	20	10	10
Conflicting Peds, #/hr	0	0	0	0	0	0	0	0	0	0	0	0
Sign Control	Free	Free	Free	Free	Free	Free	Stop	Stop	Stop	Stop	Stop	Stop
RT Channelized	-	-	None	-	-	None	-	-	None	-	-	None
Storage Length	-	-	-	-	-	-	-	-	-	-	-	-
Veh in Median Storage, #	-	0	-	-	0	-	-	0	-	-	0	-
Grade, %	-	0	-	-	0	-	-	0	-	-	0	-
Peak Hour Factor	77	77	77	77	77	77	77	77	77	77	77	77
Heavy Vehicles, %	29	29	29	36	36	36	2	2	2	2	2	2
Mvmt Flow	13	195	13	13	273	13	13	13	13	26	13	13

Major/Minor	Major1			Major2			Minor1			Minor2		
Conflicting Flow All	286	0	0	208	0	0	545	539	201	545	539	279
Stage 1	-	-	-	-	-	-	227	227	-	305	305	-
Stage 2	-	-	-	-	-	-	318	312	-	240	234	-
Critical Hdwy	4.39	-	-	4.46	-	-	7.12	6.52	6.22	7.12	6.52	6.22
Critical Hdwy Stg 1	-	-	-	-	-	-	6.12	5.52	-	6.12	5.52	-
Critical Hdwy Stg 2	-	-	-	-	-	-	6.12	5.52	-	6.12	5.52	-
Follow-up Hdwy	2.461	-	-	2.524	-	-	3.518	4.018	3.318	3.518	4.018	3.318
Pot Cap-1 Maneuver	1136	-	-	1185	-	-	449	449	840	449	449	760
Stage 1	-	-	-	-	-	-	776	716	-	705	662	-
Stage 2	-	-	-	-	-	-	693	658	-	763	711	-
Platoon blocked, %		-	-		-	-						
Mov Cap-1 Maneuver	1136	-	-	1185	-	-	423	437	840	424	437	760
Mov Cap-2 Maneuver	-	-	-	-	-	-	423	437	-	424	437	-
Stage 1	-	-	-	-	-	-	766	707	-	696	653	-
Stage 2	-	-	-	-	-	-	659	649	-	728	702	-

Approach	EB	WB	NB	SB
HCM Control Delay, s	0.5	0.4	12.6	13.4
HCM LOS			B	B

Minor Lane/Major Mvmt	NBLn1	EBL	EBT	EBR	WBL	WBT	WBR	SBLn1
Capacity (veh/h)	513	1136	-	-	1185	-	-	481
HCM Lane V/C Ratio	0.076	0.011	-	-	0.011	-	-	0.108
HCM Control Delay (s)	12.6	8.2	0	-	8.1	0	-	13.4
HCM Lane LOS	B	A	A	-	A	A	-	B
HCM 95th %tile Q(veh)	0.2	0	-	-	0	-	-	0.4

Intersection	
Int Delay, s/veh	4.1

Movement	EBL	EBT	EBR	WBL	WBT	WBR	NBL	NBT	NBR	SBL	SBT	SBR
Vol, veh/h	20	160	10	20	210	20	10	30	20	30	40	10
Conflicting Peds, #/hr	0	0	0	0	0	0	0	0	0	0	0	0
Sign Control	Free	Free	Free	Free	Free	Free	Stop	Stop	Stop	Stop	Stop	Stop
RT Channelized	-	-	None	-	-	None	-	-	None	-	-	None
Storage Length	-	-	-	-	-	450	-	-	-	-	-	-
Veh in Median Storage, #	-	0	-	-	0	-	-	0	-	-	0	-
Grade, %	-	0	-	-	0	-	-	0	-	-	0	-
Peak Hour Factor	85	85	85	85	85	85	85	85	85	85	85	85
Heavy Vehicles, %	29	29	29	36	36	36	2	2	2	2	2	2
Mvmt Flow	24	188	12	24	247	24	12	35	24	35	47	12

Major/Minor	Major1			Major2			Minor1			Minor2		
Conflicting Flow All	247	0	0	200	0	0	565	535	194	565	541	247
Stage 1	-	-	-	-	-	-	241	241	-	294	294	-
Stage 2	-	-	-	-	-	-	324	294	-	271	247	-
Critical Hdwy	4.39	-	-	4.46	-	-	7.12	6.52	6.22	7.12	6.52	6.22
Critical Hdwy Stg 1	-	-	-	-	-	-	6.12	5.52	-	6.12	5.52	-
Critical Hdwy Stg 2	-	-	-	-	-	-	6.12	5.52	-	6.12	5.52	-
Follow-up Hdwy	2.461	-	-	2.524	-	-	3.518	4.018	3.318	3.518	4.018	3.318
Pot Cap-1 Maneuver	1176	-	-	1193	-	-	436	452	847	436	448	792
Stage 1	-	-	-	-	-	-	762	706	-	714	670	-
Stage 2	-	-	-	-	-	-	688	670	-	735	702	-
Platoon blocked, %		-	-		-	-						
Mov Cap-1 Maneuver	1176	-	-	1193	-	-	380	431	847	383	427	792
Mov Cap-2 Maneuver	-	-	-	-	-	-	380	431	-	383	427	-
Stage 1	-	-	-	-	-	-	744	690	-	698	654	-
Stage 2	-	-	-	-	-	-	614	654	-	662	686	-

Approach	EB	WB	NB	SB
HCM Control Delay, s	0.9	0.6	13.3	15.6
HCM LOS			B	C

Minor Lane/Major Mvmt	NBLn1	EBL	EBT	EBR	WBL	WBT	WBR	SBLn1
Capacity (veh/h)	502	1176	-	-	1193	-	-	433
HCM Lane V/C Ratio	0.141	0.02	-	-	0.02	-	-	0.217
HCM Control Delay (s)	13.3	8.1	0	-	8.1	0	-	15.6
HCM Lane LOS	B	A	A	-	A	A	-	C
HCM 95th %tile Q(veh)	0.5	0.1	-	-	0.1	-	-	0.8

Intersection	
Int Delay, s/veh	1.8

Movement	EBL	EBT	EBR	WBL	WBT	WBR	NBL	NBT	NBR	SBL	SBT	SBR
Vol, veh/h	10	200	10	10	230	10	10	10	10	10	10	10
Conflicting Peds, #/hr	0	0	0	0	0	0	0	0	0	0	0	0
Sign Control	Free	Free	Free	Free	Free	Free	Stop	Stop	Stop	Stop	Stop	Stop
RT Channelized	-	-	None	-	-	None	-	-	None	-	-	None
Storage Length	-	-	-	-	-	-	-	-	-	-	-	-
Veh in Median Storage, #	-	0	-	-	0	-	-	0	-	-	0	-
Grade, %	-	0	-	-	0	-	-	0	-	-	0	-
Peak Hour Factor	84	84	84	84	84	84	84	84	84	84	84	84
Heavy Vehicles, %	29	29	29	36	36	36	2	2	2	2	2	2
Mvmt Flow	12	238	12	12	274	12	12	12	12	12	12	12

Major/Minor	Major1			Major2			Minor1			Minor2		
Conflicting Flow All	286	0	0	250	0	0	583	578	244	584	578	280
Stage 1	-	-	-	-	-	-	268	268	-	304	304	-
Stage 2	-	-	-	-	-	-	315	310	-	280	274	-
Critical Hdwy	4.39	-	-	4.46	-	-	7.12	6.52	6.22	7.12	6.52	6.22
Critical Hdwy Stg 1	-	-	-	-	-	-	6.12	5.52	-	6.12	5.52	-
Critical Hdwy Stg 2	-	-	-	-	-	-	6.12	5.52	-	6.12	5.52	-
Follow-up Hdwy	2.461	-	-	2.524	-	-	3.518	4.018	3.318	3.518	4.018	3.318
Pot Cap-1 Maneuver	1136	-	-	1141	-	-	424	427	795	423	427	759
Stage 1	-	-	-	-	-	-	738	687	-	705	663	-
Stage 2	-	-	-	-	-	-	696	659	-	727	683	-
Platoon blocked, %		-	-		-	-						
Mov Cap-1 Maneuver	1136	-	-	1141	-	-	401	416	795	400	416	759
Mov Cap-2 Maneuver	-	-	-	-	-	-	401	416	-	400	416	-
Stage 1	-	-	-	-	-	-	729	679	-	697	654	-
Stage 2	-	-	-	-	-	-	664	650	-	695	675	-

Approach	EB	WB	NB	SB
HCM Control Delay, s	0.4	0.3	13	13.1
HCM LOS			B	B

Minor Lane/Major Mvmt	NBLn1	EBL	EBT	EBR	WBL	WBT	WBR	SBLn1
Capacity (veh/h)	487	1136	-	-	1141	-	-	482
HCM Lane V/C Ratio	0.073	0.01	-	-	0.01	-	-	0.074
HCM Control Delay (s)	13	8.2	0	-	8.2	0	-	13.1
HCM Lane LOS	B	A	A	-	A	A	-	B
HCM 95th %tile Q(veh)	0.2	0	-	-	0	-	-	0.2

Intersection	
Int Delay, s/veh	1.7

Movement	EBL	EBT	EBR	WBL	WBT	WBR	NBL	NBT	NBR	SBL	SBT	SBR
Vol, veh/h	10	210	20	10	220	10	10	10	10	10	10	10
Conflicting Peds, #/hr	0	0	0	0	0	0	0	0	0	0	0	0
Sign Control	Free	Free	Free	Free	Free	Free	Stop	Stop	Stop	Stop	Stop	Stop
RT Channelized	-	-	None	-	-	None	-	-	None	-	-	None
Storage Length	-	-	-	-	-	-	-	-	-	-	-	-
Veh in Median Storage, #	-	0	-	-	0	-	-	0	-	-	0	-
Grade, %	-	0	-	-	0	-	-	0	-	-	0	-
Peak Hour Factor	92	92	92	92	92	92	92	92	92	92	92	92
Heavy Vehicles, %	26	26	26	36	36	36	2	2	2	2	2	2
Mvmt Flow	11	228	22	11	239	11	11	11	11	11	11	11

Major/Minor	Major1			Major2			Minor1			Minor2		
Conflicting Flow All	250	0	0	250	0	0	538	533	239	538	538	245
Stage 1	-	-	-	-	-	-	261	261	-	266	266	-
Stage 2	-	-	-	-	-	-	277	272	-	272	272	-
Critical Hdwy	4.36	-	-	4.46	-	-	7.12	6.52	6.22	7.12	6.52	6.22
Critical Hdwy Stg 1	-	-	-	-	-	-	6.12	5.52	-	6.12	5.52	-
Critical Hdwy Stg 2	-	-	-	-	-	-	6.12	5.52	-	6.12	5.52	-
Follow-up Hdwy	2.434	-	-	2.524	-	-	3.518	4.018	3.318	3.518	4.018	3.318
Pot Cap-1 Maneuver	1188	-	-	1141	-	-	454	453	800	454	450	794
Stage 1	-	-	-	-	-	-	744	692	-	739	689	-
Stage 2	-	-	-	-	-	-	729	685	-	734	685	-
Platoon blocked, %		-	-		-	-						
Mov Cap-1 Maneuver	1188	-	-	1141	-	-	432	443	800	432	440	794
Mov Cap-2 Maneuver	-	-	-	-	-	-	432	443	-	432	440	-
Stage 1	-	-	-	-	-	-	736	684	-	731	681	-
Stage 2	-	-	-	-	-	-	700	677	-	705	677	-

Approach	EB	WB	NB	SB
HCM Control Delay, s	0.3	0.3	12.5	12.5
HCM LOS			B	B

Minor Lane/Major Mvmt	NBLn1	EBL	EBT	EBR	WBL	WBT	WBR	SBLn1
Capacity (veh/h)	515	1188	-	-	1141	-	-	513
HCM Lane V/C Ratio	0.063	0.009	-	-	0.01	-	-	0.064
HCM Control Delay (s)	12.5	8.1	0	-	8.2	0	-	12.5
HCM Lane LOS	B	A	A	-	A	A	-	B
HCM 95th %tile Q(veh)	0.2	0	-	-	0	-	-	0.2

Intersection	
Int Delay, s/veh	2.2

Movement	EBL	EBT	EBR	WBL	WBT	WBR	NBL	NBT	NBR	SBL	SBT	SBR
Vol, veh/h	10	230	10	10	210	10	10	20	10	20	10	10
Conflicting Peds, #/hr	0	0	0	0	0	0	0	0	0	0	0	0
Sign Control	Free	Free	Free	Free	Free	Free	Stop	Stop	Stop	Stop	Stop	Stop
RT Channelized	-	-	None	-	-	None	-	-	None	-	-	None
Storage Length	-	-	-	-	-	-	-	-	-	-	-	-
Veh in Median Storage, #	-	0	-	-	0	-	-	0	-	-	0	-
Grade, %	-	0	-	-	0	-	-	0	-	-	0	-
Peak Hour Factor	92	92	92	92	92	92	92	92	92	92	92	92
Heavy Vehicles, %	26	26	26	36	36	36	2	2	2	2	2	2
Mvmt Flow	11	250	11	11	228	11	11	22	11	22	11	11

Major/Minor	Major1			Major2			Minor1			Minor2		
Conflicting Flow All	239	0	0	261	0	0	543	538	255	548	538	234
Stage 1	-	-	-	-	-	-	277	277	-	255	255	-
Stage 2	-	-	-	-	-	-	266	261	-	293	283	-
Critical Hdwy	4.36	-	-	4.46	-	-	7.12	6.52	6.22	7.12	6.52	6.22
Critical Hdwy Stg 1	-	-	-	-	-	-	6.12	5.52	-	6.12	5.52	-
Critical Hdwy Stg 2	-	-	-	-	-	-	6.12	5.52	-	6.12	5.52	-
Follow-up Hdwy	2.434	-	-	2.524	-	-	3.518	4.018	3.318	3.518	4.018	3.318
Pot Cap-1 Maneuver	1199	-	-	1130	-	-	451	450	784	447	450	805
Stage 1	-	-	-	-	-	-	729	681	-	749	696	-
Stage 2	-	-	-	-	-	-	739	692	-	715	677	-
Platoon blocked, %		-	-		-	-						
Mov Cap-1 Maneuver	1199	-	-	1130	-	-	429	440	784	417	440	805
Mov Cap-2 Maneuver	-	-	-	-	-	-	429	440	-	417	440	-
Stage 1	-	-	-	-	-	-	721	674	-	741	688	-
Stage 2	-	-	-	-	-	-	710	684	-	675	670	-

Approach	EB	WB	NB	SB
HCM Control Delay, s	0.3	0.4	13	13.2
HCM LOS			B	B

Minor Lane/Major Mvmt	NBLn1	EBL	EBT	EBR	WBL	WBT	WBR	SBLn1
Capacity (veh/h)	491	1199	-	-	1130	-	-	481
HCM Lane V/C Ratio	0.089	0.009	-	-	0.01	-	-	0.09
HCM Control Delay (s)	13	8	0	-	8.2	0	-	13.2
HCM Lane LOS	B	A	A	-	A	A	-	B
HCM 95th %tile Q(veh)	0.3	0	-	-	0	-	-	0.3

Intersection	
Int Delay, s/veh	4.3

Movement	EBL	EBT	EBR	WBL	WBT	WBR	NBL	NBT	NBR	SBL	SBT	SBR
Vol, veh/h	10	210	30	10	200	10	20	40	10	20	70	30
Conflicting Peds, #/hr	0	0	0	0	0	0	0	0	0	0	0	0
Sign Control	Free	Free	Free	Free	Free	Free	Stop	Stop	Stop	Stop	Stop	Stop
RT Channelized	-	-	None	-	-	None	-	-	None	-	-	None
Storage Length	-	-	450	-	-	-	-	-	-	-	-	-
Veh in Median Storage, #	-	0	-	-	0	-	-	0	-	-	0	-
Grade, %	-	0	-	-	0	-	-	0	-	-	0	-
Peak Hour Factor	94	94	94	94	94	94	94	94	94	94	94	94
Heavy Vehicles, %	26	26	26	36	36	36	2	2	2	2	2	2
Mvmt Flow	11	223	32	11	213	11	21	43	11	21	74	32

Major/Minor	Major1			Major2			Minor1			Minor2		
Conflicting Flow All	223	0	0	223	0	0	538	490	223	510	484	218
Stage 1	-	-	-	-	-	-	245	245	-	239	239	-
Stage 2	-	-	-	-	-	-	293	245	-	271	245	-
Critical Hdwy	4.36	-	-	4.46	-	-	7.12	6.52	6.22	7.12	6.52	6.22
Critical Hdwy Stg 1	-	-	-	-	-	-	6.12	5.52	-	6.12	5.52	-
Critical Hdwy Stg 2	-	-	-	-	-	-	6.12	5.52	-	6.12	5.52	-
Follow-up Hdwy	2.434	-	-	2.524	-	-	3.518	4.018	3.318	3.518	4.018	3.318
Pot Cap-1 Maneuver	1216	-	-	1169	-	-	454	479	817	474	483	822
Stage 1	-	-	-	-	-	-	759	703	-	764	708	-
Stage 2	-	-	-	-	-	-	715	703	-	735	703	-
Platoon blocked, %		-	-		-	-						
Mov Cap-1 Maneuver	1216	-	-	1169	-	-	377	469	817	428	472	822
Mov Cap-2 Maneuver	-	-	-	-	-	-	377	469	-	428	472	-
Stage 1	-	-	-	-	-	-	751	695	-	756	700	-
Stage 2	-	-	-	-	-	-	607	695	-	674	695	-

Approach	EB	WB	NB	SB
HCM Control Delay, s	0.3	0.4	14.2	14.2
HCM LOS			B	B

Minor Lane/Major Mvmt	NBLn1	EBL	EBT	EBR	WBL	WBT	WBR	SBLn1
Capacity (veh/h)	465	1216	-	-	1169	-	-	518
HCM Lane V/C Ratio	0.16	0.009	-	-	0.009	-	-	0.246
HCM Control Delay (s)	14.2	8	0	-	8.1	0	-	14.2
HCM Lane LOS	B	A	A	-	A	A	-	B
HCM 95th %tile Q(veh)	0.6	0	-	-	0	-	-	1

Intersection	
Int Delay, s/veh	1.7

Movement	EBL	EBT	EBR	WBL	WBT	WBR	NBL	NBT	NBR	SBL	SBT	SBR
Vol, veh/h	10	230	10	10	200	10	10	10	10	10	10	10
Conflicting Peds, #/hr	0	0	0	0	0	0	0	0	0	0	0	0
Sign Control	Free	Free	Free	Free	Free	Free	Stop	Stop	Stop	Stop	Stop	Stop
RT Channelized	-	-	None	-	-	None	-	-	None	-	-	None
Storage Length	-	-	-	-	-	-	-	-	-	-	-	-
Veh in Median Storage, #	-	0	-	-	0	-	-	0	-	-	0	-
Grade, %	-	0	-	-	0	-	-	0	-	-	0	-
Peak Hour Factor	96	96	96	96	96	96	96	96	96	96	96	96
Heavy Vehicles, %	26	26	26	36	36	36	2	2	2	2	2	2
Mvmt Flow	10	240	10	10	208	10	10	10	10	10	10	10

Major/Minor	Major1			Major2			Minor1			Minor2		
Conflicting Flow All	219	0	0	250	0	0	511	506	245	510	505	214
Stage 1	-	-	-	-	-	-	266	266	-	234	234	-
Stage 2	-	-	-	-	-	-	245	240	-	276	271	-
Critical Hdwy	4.36	-	-	4.46	-	-	7.12	6.52	6.22	7.12	6.52	6.22
Critical Hdwy Stg 1	-	-	-	-	-	-	6.12	5.52	-	6.12	5.52	-
Critical Hdwy Stg 2	-	-	-	-	-	-	6.12	5.52	-	6.12	5.52	-
Follow-up Hdwy	2.434	-	-	2.524	-	-	3.518	4.018	3.318	3.518	4.018	3.318
Pot Cap-1 Maneuver	1221	-	-	1141	-	-	473	469	794	474	470	826
Stage 1	-	-	-	-	-	-	739	689	-	769	711	-
Stage 2	-	-	-	-	-	-	759	707	-	730	685	-
Platoon blocked, %		-	-		-	-						
Mov Cap-1 Maneuver	1221	-	-	1141	-	-	452	460	794	453	461	826
Mov Cap-2 Maneuver	-	-	-	-	-	-	452	460	-	453	461	-
Stage 1	-	-	-	-	-	-	732	682	-	761	704	-
Stage 2	-	-	-	-	-	-	731	700	-	702	678	-

Approach	EB	WB	NB	SB
HCM Control Delay, s	0.3	0.4	12.2	12.1
HCM LOS			B	B

Minor Lane/Major Mvmt	NBLn1	EBL	EBT	EBR	WBL	WBT	WBR	SBLn1
Capacity (veh/h)	531	1221	-	-	1141	-	-	537
HCM Lane V/C Ratio	0.059	0.009	-	-	0.009	-	-	0.058
HCM Control Delay (s)	12.2	8	0	-	8.2	0	-	12.1
HCM Lane LOS	B	A	A	-	A	A	-	B
HCM 95th %tile Q(veh)	0.2	0	-	-	0	-	-	0.2

Intersection	
Int Delay, s/veh	3.3

Movement	EBL	EBT	EBR	WBL	WBT	WBR	NBL	NBT	NBR	SBL	SBT	SBR
Vol, veh/h	0	90	160	10	130	0	0	0	0	20	0	80
Conflicting Peds, #/hr	0	0	0	0	0	0	0	0	0	0	0	0
Sign Control	Free	Free	Free	Free	Free	Free	Stop	Stop	Stop	Stop	Stop	Stop
RT Channelized	-	-	Free	-	-	None	-	-	None	-	-	None
Storage Length	-	-	-	135	-	-	-	-	-	-	-	0
Veh in Median Storage, #	-	0	-	-	0	-	-	0	-	-	0	-
Grade, %	-	0	-	-	0	-	-	0	-	-	0	-
Peak Hour Factor	92	92	92	92	92	92	92	92	92	92	92	92
Heavy Vehicles, %	38	38	38	44	44	44	2	2	2	38	2	44
Mvmt Flow	0	98	174	11	141	0	0	0	0	22	0	87

Major/Minor	Major1			Major2			Minor2		
Conflicting Flow All	141	0	-	98	0	0	261	261	141
Stage 1	-	-	-	-	-	-	163	163	-
Stage 2	-	-	-	-	-	-	98	98	-
Critical Hdwy	4.48	-	-	4.54	-	-	6.78	6.52	6.64
Critical Hdwy Stg 1	-	-	-	-	-	-	5.78	5.52	-
Critical Hdwy Stg 2	-	-	-	-	-	-	5.78	5.52	-
Follow-up Hdwy	2.542	-	-	2.596	-	-	3.842	4.018	3.696
Pot Cap-1 Maneuver	1248	-	0	1269	-	-	657	644	807
Stage 1	-	-	0	-	-	-	786	763	-
Stage 2	-	-	0	-	-	-	843	814	-
Platoon blocked, %		-			-	-			
Mov Cap-1 Maneuver	1248	-	-	1269	-	-	651	0	807
Mov Cap-2 Maneuver	-	-	-	-	-	-	651	0	-
Stage 1	-	-	-	-	-	-	779	0	-
Stage 2	-	-	-	-	-	-	843	0	-

Approach	EB	WB	SB
HCM Control Delay, s	0	0.6	10.1
HCM LOS			B

Minor Lane/Major Mvmt	EBL	EBT	WBL	WBT	WBR	SBLn1	SBLn2
Capacity (veh/h)	1248	-	1269	-	-	651	807
HCM Lane V/C Ratio	-	-	0.009	-	-	0.033	0.108
HCM Control Delay (s)	0	-	7.9	-	-	10.7	10
HCM Lane LOS	A	-	A	-	-	B	B
HCM 95th %tile Q(veh)	0	-	0	-	-	0.1	0.4

Intersection	
Int Delay, s/veh	4

Movement	EBL	EBT	EBR	WBL	WBT	WBR	NBL	NBT	NBR	SBL	SBT	SBR
Vol, veh/h	0	70	40	0	50	20	90	0	20	0	0	0
Conflicting Peds, #/hr	0	0	0	0	0	0	0	0	0	0	0	0
Sign Control	Free	Free	Free	Free	Free	Free	Stop	Stop	Stop	Stop	Stop	Stop
RT Channelized	-	-	None	-	-	None	-	-	None	-	-	None
Storage Length	-	-	-	-	-	-	0	-	0	-	-	-
Veh in Median Storage, #	-	0	-	-	0	-	-	0	-	-	0	-
Grade, %	-	0	-	-	0	-	-	0	-	-	0	-
Peak Hour Factor	86	86	86	86	86	86	86	86	86	86	86	86
Heavy Vehicles, %	38	38	38	44	44	44	44	2	2	2	2	2
Mvmt Flow	0	81	47	0	58	23	105	0	23	0	0	0

Major/Minor	Major1			Major2			Minor1		
Conflicting Flow All	81	0	0	128	0	0	175	186	105
Stage 1	-	-	-	-	-	-	105	105	-
Stage 2	-	-	-	-	-	-	70	81	-
Critical Hdwy	4.48	-	-	4.54	-	-	6.84	6.52	6.22
Critical Hdwy Stg 1	-	-	-	-	-	-	5.84	5.52	-
Critical Hdwy Stg 2	-	-	-	-	-	-	5.84	5.52	-
Follow-up Hdwy	2.542	-	-	2.596	-	-	3.896	4.018	3.318
Pot Cap-1 Maneuver	1317	-	-	1235	-	-	727	708	949
Stage 1	-	-	-	-	-	-	824	808	-
Stage 2	-	-	-	-	-	-	856	828	-
Platoon blocked, %		-	-		-	-			
Mov Cap-1 Maneuver	1317	-	-	1235	-	-	727	0	949
Mov Cap-2 Maneuver	-	-	-	-	-	-	727	0	-
Stage 1	-	-	-	-	-	-	824	0	-
Stage 2	-	-	-	-	-	-	856	0	-

Approach	EB	WB	NB
HCM Control Delay, s	0	0	10.5
HCM LOS			B

Minor Lane/Major Mvmt	NBLn1	NBLn2	EBL	EBT	EBR	WBL	WBT	WBR
Capacity (veh/h)	727	949	1317	-	-	1235	-	-
HCM Lane V/C Ratio	0.144	0.025	-	-	-	-	-	-
HCM Control Delay (s)	10.8	8.9	0	-	-	0	-	-
HCM Lane LOS	B	A	A	-	-	A	-	-
HCM 95th %tile Q(veh)	0.5	0.1	0	-	-	0	-	-

Intersection	
Int Delay, s/veh	0.6

Movement	EBL	EBT	WBT	WBR	SBL	SBR
Vol, veh/h	10	470	360	20	20	10
Conflicting Peds, #/hr	0	0	0	0	0	0
Sign Control	Free	Free	Free	Free	Stop	Stop
RT Channelized	-	None	-	None	-	None
Storage Length	105	-	-	450	0	-
Veh in Median Storage, #	-	0	0	-	0	-
Grade, %	-	0	0	-	0	-
Peak Hour Factor	87	87	87	87	87	87
Heavy Vehicles, %	35	35	41	41	2	2
Mvmt Flow	11	540	414	23	23	11

Major/Minor	Major1		Major2		Minor2	
Conflicting Flow All	414	0	-	0	707	207
Stage 1	-	-	-	-	414	-
Stage 2	-	-	-	-	293	-
Critical Hdwy	4.8	-	-	-	6.84	6.94
Critical Hdwy Stg 1	-	-	-	-	5.84	-
Critical Hdwy Stg 2	-	-	-	-	5.84	-
Follow-up Hdwy	2.55	-	-	-	3.52	3.32
Pot Cap-1 Maneuver	938	-	-	-	370	799
Stage 1	-	-	-	-	635	-
Stage 2	-	-	-	-	731	-
Platoon blocked, %		-	-	-		
Mov Cap-1 Maneuver	938	-	-	-	366	799
Mov Cap-2 Maneuver	-	-	-	-	366	-
Stage 1	-	-	-	-	635	-
Stage 2	-	-	-	-	722	-

Approach	EB	WB	SB
HCM Control Delay, s	0.2	0	13.7
HCM LOS			B

Minor Lane/Major Mvmt	EBL	EBT	WBT	WBR	SBLn1
Capacity (veh/h)	938	-	-	-	447
HCM Lane V/C Ratio	0.012	-	-	-	0.077
HCM Control Delay (s)	8.9	-	-	-	13.7
HCM Lane LOS	A	-	-	-	B
HCM 95th %tile Q(veh)	0	-	-	-	0.2

Intersection	
Int Delay, s/veh	2.1

Movement	EBT	EBR	WBL	WBT	NBL	NBR
Vol, veh/h	360	50	10	320	50	40
Conflicting Peds, #/hr	0	0	0	0	0	0
Sign Control	Free	Free	Free	Free	Stop	Stop
RT Channelized	-	None	-	None	-	None
Storage Length	-	-	450	-	0	-
Veh in Median Storage, #	0	-	-	0	0	-
Grade, %	0	-	-	0	0	-
Peak Hour Factor	79	79	79	79	79	79
Heavy Vehicles, %	35	35	41	41	2	2
Mvmt Flow	456	63	13	405	63	51

Major/Minor	Major1		Major2		Minor1	
Conflicting Flow All	0	0	519	0	917	259
Stage 1	-	-	-	-	487	-
Stage 2	-	-	-	-	430	-
Critical Hdwy	-	-	4.92	-	6.63	6.93
Critical Hdwy Stg 1	-	-	-	-	5.83	-
Critical Hdwy Stg 2	-	-	-	-	5.43	-
Follow-up Hdwy	-	-	2.61	-	3.519	3.319
Pot Cap-1 Maneuver	-	-	814	-	286	741
Stage 1	-	-	-	-	584	-
Stage 2	-	-	-	-	655	-
Platoon blocked, %	-	-		-		
Mov Cap-1 Maneuver	-	-	814	-	281	741
Mov Cap-2 Maneuver	-	-	-	-	281	-
Stage 1	-	-	-	-	584	-
Stage 2	-	-	-	-	645	-

Approach	EB	WB	NB
HCM Control Delay, s	0	0.3	18.1
HCM LOS			C

Minor Lane/Major Mvmt	NBLn1	EBT	EBR	WBL	WBT
Capacity (veh/h)	388	-	-	814	-
HCM Lane V/C Ratio	0.294	-	-	0.016	-
HCM Control Delay (s)	18.1	-	-	9.5	-
HCM Lane LOS	C	-	-	A	-
HCM 95th %tile Q(veh)	1.2	-	-	0	-

Intersection	
Int Delay, s/veh	1.1

Movement	EBL	EBT	WBT	WBR	SBL	SBR
Vol, veh/h	10	390	310	10	20	30
Conflicting Peds, #/hr	0	0	0	0	0	0
Sign Control	Free	Free	Free	Free	Stop	Stop
RT Channelized	-	None	-	None	-	None
Storage Length	450	-	-	-	0	-
Veh in Median Storage, #	-	0	0	-	0	-
Grade, %	-	0	0	-	0	-
Peak Hour Factor	72	72	72	72	72	72
Heavy Vehicles, %	30	30	38	38	2	2
Mvmt Flow	14	542	431	14	28	42

Major/Minor	Major1		Major2		Minor2	
Conflicting Flow All	444	0	-	0	1007	438
Stage 1	-	-	-	-	438	-
Stage 2	-	-	-	-	569	-
Critical Hdwy	4.4	-	-	-	6.42	6.22
Critical Hdwy Stg 1	-	-	-	-	5.42	-
Critical Hdwy Stg 2	-	-	-	-	5.42	-
Follow-up Hdwy	2.47	-	-	-	3.518	3.318
Pot Cap-1 Maneuver	983	-	-	-	267	619
Stage 1	-	-	-	-	651	-
Stage 2	-	-	-	-	566	-
Platoon blocked, %		-	-	-		
Mov Cap-1 Maneuver	983	-	-	-	263	619
Mov Cap-2 Maneuver	-	-	-	-	263	-
Stage 1	-	-	-	-	651	-
Stage 2	-	-	-	-	558	-

Approach	EB	WB	SB
HCM Control Delay, s	0.2	0	15.8
HCM LOS			C

Minor Lane/Major Mvmt	EBL	EBT	WBT	WBR	SBLn1
Capacity (veh/h)	983	-	-	-	402
HCM Lane V/C Ratio	0.014	-	-	-	0.173
HCM Control Delay (s)	8.7	-	-	-	15.8
HCM Lane LOS	A	-	-	-	C
HCM 95th %tile Q(veh)	0	-	-	-	0.6

Intersection	
Int Delay, s/veh	2.2

Movement	EBL	EBT	WBT	WBR	SBL	SBR
Vol, veh/h	20	280	220	10	20	90
Conflicting Peds, #/hr	0	0	0	0	0	0
Sign Control	Free	Free	Free	Free	Stop	Stop
RT Channelized	-	None	-	None	-	None
Storage Length	450	-	-	-	0	-
Veh in Median Storage, #	-	0	0	-	0	-
Grade, %	-	0	0	-	0	-
Peak Hour Factor	92	92	92	92	92	92
Heavy Vehicles, %	30	30	38	38	2	2
Mvmt Flow	22	304	239	11	22	98

Major/Minor	Major1		Major2		Minor2	
Conflicting Flow All	250	0	-	0	593	245
Stage 1	-	-	-	-	245	-
Stage 2	-	-	-	-	348	-
Critical Hdwy	4.4	-	-	-	6.42	6.22
Critical Hdwy Stg 1	-	-	-	-	5.42	-
Critical Hdwy Stg 2	-	-	-	-	5.42	-
Follow-up Hdwy	2.47	-	-	-	3.518	3.318
Pot Cap-1 Maneuver	1168	-	-	-	468	794
Stage 1	-	-	-	-	796	-
Stage 2	-	-	-	-	715	-
Platoon blocked, %		-	-	-		
Mov Cap-1 Maneuver	1168	-	-	-	459	794
Mov Cap-2 Maneuver	-	-	-	-	459	-
Stage 1	-	-	-	-	796	-
Stage 2	-	-	-	-	702	-

Approach	EB	WB	SB
HCM Control Delay, s	0.5	0	11.2
HCM LOS			B

Minor Lane/Major Mvmt	EBL	EBT	WBT	WBR	SBLn1
Capacity (veh/h)	1168	-	-	-	701
HCM Lane V/C Ratio	0.019	-	-	-	0.171
HCM Control Delay (s)	8.1	-	-	-	11.2
HCM Lane LOS	A	-	-	-	B
HCM 95th %tile Q(veh)	0.1	-	-	-	0.6

Intersection	
Int Delay, s/veh	2.2

Movement	EBL	EBT	WBT	WBR	SBL	SBR
Vol, veh/h	80	220	190	10	10	40
Conflicting Peds, #/hr	0	0	0	0	0	0
Sign Control	Free	Free	Free	Free	Stop	Stop
RT Channelized	-	None	-	None	-	None
Storage Length	450	-	-	-	0	-
Veh in Median Storage, #	-	0	0	-	0	-
Grade, %	-	0	0	-	0	-
Peak Hour Factor	95	95	95	95	95	95
Heavy Vehicles, %	30	30	37	37	2	2
Mvmt Flow	84	232	200	11	11	42

Major/Minor	Major1		Major2		Minor2	
Conflicting Flow All	211	0	-	0	605	205
Stage 1	-	-	-	-	205	-
Stage 2	-	-	-	-	400	-
Critical Hdwy	4.4	-	-	-	6.42	6.22
Critical Hdwy Stg 1	-	-	-	-	5.42	-
Critical Hdwy Stg 2	-	-	-	-	5.42	-
Follow-up Hdwy	2.47	-	-	-	3.518	3.318
Pot Cap-1 Maneuver	1210	-	-	-	461	836
Stage 1	-	-	-	-	829	-
Stage 2	-	-	-	-	677	-
Platoon blocked, %		-	-	-		
Mov Cap-1 Maneuver	1210	-	-	-	429	836
Mov Cap-2 Maneuver	-	-	-	-	429	-
Stage 1	-	-	-	-	829	-
Stage 2	-	-	-	-	630	-

Approach	EB	WB	SB
HCM Control Delay, s	2.2	0	10.5
HCM LOS			B

Minor Lane/Major Mvmt	EBL	EBT	WBT	WBR	SBLn1
Capacity (veh/h)	1210	-	-	-	703
HCM Lane V/C Ratio	0.07	-	-	-	0.075
HCM Control Delay (s)	8.2	-	-	-	10.5
HCM Lane LOS	A	-	-	-	B
HCM 95th %tile Q(veh)	0.2	-	-	-	0.2

Intersection	
Int Delay, s/veh	1.2

Movement	EBL	EBT	WBT	WBR	SBL	SBR
Vol, veh/h	10	220	180	60	40	10
Conflicting Peds, #/hr	0	0	0	0	0	0
Sign Control	Free	Free	Free	Free	Stop	Stop
RT Channelized	-	None	-	None	-	None
Storage Length	-	-	-	450	0	-
Veh in Median Storage, #	-	0	0	-	0	-
Grade, %	-	0	0	-	0	-
Peak Hour Factor	97	97	97	97	97	97
Heavy Vehicles, %	30	30	37	37	2	2
Mvmt Flow	10	227	186	62	41	10

Major/Minor	Major1		Major2		Minor2	
Conflicting Flow All	186	0	-	0	433	186
Stage 1	-	-	-	-	186	-
Stage 2	-	-	-	-	247	-
Critical Hdwy	4.4	-	-	-	6.42	6.22
Critical Hdwy Stg 1	-	-	-	-	5.42	-
Critical Hdwy Stg 2	-	-	-	-	5.42	-
Follow-up Hdwy	2.47	-	-	-	3.518	3.318
Pot Cap-1 Maneuver	1237	-	-	-	580	856
Stage 1	-	-	-	-	846	-
Stage 2	-	-	-	-	794	-
Platoon blocked, %		-	-	-		
Mov Cap-1 Maneuver	1237	-	-	-	575	856
Mov Cap-2 Maneuver	-	-	-	-	575	-
Stage 1	-	-	-	-	846	-
Stage 2	-	-	-	-	787	-

Approach	EB	WB	SB
HCM Control Delay, s	0.3	0	11.4
HCM LOS			B

Minor Lane/Major Mvmt	EBL	EBT	WBT	WBR	SBLn1
Capacity (veh/h)	1237	-	-	-	615
HCM Lane V/C Ratio	0.008	-	-	-	0.084
HCM Control Delay (s)	7.9	0	-	-	11.4
HCM Lane LOS	A	A	-	-	B
HCM 95th %tile Q(veh)	0	-	-	-	0.3

Intersection	
Int Delay, s/veh	10.1

Movement	EBL	EBT	EBR	WBL	WBT	WBR	NBL	NBT	NBR
Vol, veh/h	10	260	20	30	210	20	100	90	30
Conflicting Peds, #/hr	0	0	0	0	0	0	0	0	0
Sign Control	Free	Free	Free	Free	Free	Free	Stop	Stop	Stop
RT Channelized	-	-	None	-	-	None	-	-	None
Storage Length	-	-	450	450	-	-	-	-	-
Veh in Median Storage, #	-	0	-	-	0	-	-	0	-
Grade, %	-	0	-	-	0	-	-	0	-
Peak Hour Factor	89	89	89	89	89	89	89	89	89
Heavy Vehicles, %	30	30	30	39	39	39	2	2	2
Mvmt Flow	11	292	22	34	236	22	112	101	34

Major/Minor	Major1			Major2			Minor1		
Conflicting Flow All	258	0	0	292	0	0	663	641	292
Stage 1	-	-	-	-	-	-	315	315	-
Stage 2	-	-	-	-	-	-	348	326	-
Critical Hdwy	4.4	-	-	4.49	-	-	7.12	6.52	6.22
Critical Hdwy Stg 1	-	-	-	-	-	-	6.12	5.52	-
Critical Hdwy Stg 2	-	-	-	-	-	-	6.12	5.52	-
Follow-up Hdwy	2.47	-	-	2.551	-	-	3.518	4.018	3.318
Pot Cap-1 Maneuver	1160	-	-	1085	-	-	375	393	747
Stage 1	-	-	-	-	-	-	696	656	-
Stage 2	-	-	-	-	-	-	668	648	-
Platoon blocked, %		-	-		-	-			
Mov Cap-1 Maneuver	1160	-	-	1085	-	-	321	376	747
Mov Cap-2 Maneuver	-	-	-	-	-	-	321	376	-
Stage 1	-	-	-	-	-	-	688	648	-
Stage 2	-	-	-	-	-	-	584	628	-

Approach	EB	WB	NB
HCM Control Delay, s	0.3	1	31.9
HCM LOS			D

Minor Lane/Major Mvmt	NBLn1	EBL	EBT	EBR	WBL	WBT	WBR	SBLn1
Capacity (veh/h)	372	1160	-	-	1085	-	-	416
HCM Lane V/C Ratio	0.664	0.01	-	-	0.031	-	-	0.189
HCM Control Delay (s)	31.9	8.1	0	-	8.4	-	-	15.7
HCM Lane LOS	D	A	A	-	A	-	-	C
HCM 95th %tile Q(veh)	4.6	0	-	-	0.1	-	-	0.7

Intersection			
Int Delay, s/veh			

Movement	SBL	SBT	SBR
Vol, veh/h	10	40	20
Conflicting Peds, #/hr	0	0	0
Sign Control	Stop	Stop	Stop
RT Channelized	-	-	None
Storage Length	-	-	-
Veh in Median Storage, #	-	0	-
Grade, %	-	0	-
Peak Hour Factor	89	89	89
Heavy Vehicles, %	2	2	2
Mvmt Flow	11	45	22

Major/Minor	Minor2		
Conflicting Flow All	697	630	247
Stage 1	315	315	-
Stage 2	382	315	-
Critical Hdwy	7.12	6.52	6.22
Critical Hdwy Stg 1	6.12	5.52	-
Critical Hdwy Stg 2	6.12	5.52	-
Follow-up Hdwy	3.518	4.018	3.318
Pot Cap-1 Maneuver	356	399	792
Stage 1	696	656	-
Stage 2	640	656	-
Platoon blocked, %			
Mov Cap-1 Maneuver	261	382	792
Mov Cap-2 Maneuver	261	382	-
Stage 1	688	635	-
Stage 2	510	648	-

Approach	SB
HCM Control Delay, s	15.7
HCM LOS	C

Minor Lane/Major Mvmt

Intersection	
Int Delay, s/veh	1.4

Movement	EBL	EBT	WBT	WBR	SBL	SBR
Vol, veh/h	20	260	240	80	40	10
Conflicting Peds, #/hr	0	0	0	0	0	0
Sign Control	Free	Free	Free	Free	Stop	Stop
RT Channelized	-	None	-	None	-	None
Storage Length	-	-	-	450	0	-
Veh in Median Storage, #	-	0	0	-	0	-
Grade, %	-	0	0	-	0	-
Peak Hour Factor	79	79	79	79	79	79
Heavy Vehicles, %	30	30	39	39	2	2
Mvmt Flow	25	329	304	101	51	13

Major/Minor	Major1		Major2		Minor2	
Conflicting Flow All	304	0	-	0	684	304
Stage 1	-	-	-	-	304	-
Stage 2	-	-	-	-	380	-
Critical Hdwy	4.4	-	-	-	6.42	6.22
Critical Hdwy Stg 1	-	-	-	-	5.42	-
Critical Hdwy Stg 2	-	-	-	-	5.42	-
Follow-up Hdwy	2.47	-	-	-	3.518	3.318
Pot Cap-1 Maneuver	1114	-	-	-	414	736
Stage 1	-	-	-	-	748	-
Stage 2	-	-	-	-	691	-
Platoon blocked, %		-	-	-		
Mov Cap-1 Maneuver	1114	-	-	-	403	736
Mov Cap-2 Maneuver	-	-	-	-	403	-
Stage 1	-	-	-	-	748	-
Stage 2	-	-	-	-	672	-

Approach	EB	WB	SB
HCM Control Delay, s	0.6	0	14.5
HCM LOS			B

Minor Lane/Major Mvmt	EBL	EBT	WBT	WBR	SBLn1
Capacity (veh/h)	1114	-	-	-	443
HCM Lane V/C Ratio	0.023	-	-	-	0.143
HCM Control Delay (s)	8.3	0	-	-	14.5
HCM Lane LOS	A	A	-	-	B
HCM 95th %tile Q(veh)	0.1	-	-	-	0.5

Intersection	
Int Delay, s/veh	0.6

Movement	EBL	EBT	WBT	WBR	SBL	SBR
Vol, veh/h	10	260	240	20	10	10
Conflicting Peds, #/hr	0	0	0	0	0	0
Sign Control	Free	Free	Free	Free	Stop	Stop
RT Channelized	-	None	-	None	-	None
Storage Length	-	-	-	-	0	-
Veh in Median Storage, #	-	0	0	-	0	-
Grade, %	-	0	0	-	0	-
Peak Hour Factor	92	92	92	92	92	92
Heavy Vehicles, %	33	33	41	41	2	2
Mvmt Flow	11	283	261	22	11	11

Major/Minor	Major1		Major2		Minor2	
Conflicting Flow All	283	0	-	0	576	272
Stage 1	-	-	-	-	272	-
Stage 2	-	-	-	-	304	-
Critical Hdwy	4.43	-	-	-	6.42	6.22
Critical Hdwy Stg 1	-	-	-	-	5.42	-
Critical Hdwy Stg 2	-	-	-	-	5.42	-
Follow-up Hdwy	2.497	-	-	-	3.518	3.318
Pot Cap-1 Maneuver	1121	-	-	-	479	767
Stage 1	-	-	-	-	774	-
Stage 2	-	-	-	-	748	-
Platoon blocked, %		-	-	-		
Mov Cap-1 Maneuver	1121	-	-	-	473	767
Mov Cap-2 Maneuver	-	-	-	-	473	-
Stage 1	-	-	-	-	774	-
Stage 2	-	-	-	-	739	-

Approach	EB	WB	SB
HCM Control Delay, s	0.3	0	11.4
HCM LOS			B

Minor Lane/Major Mvmt	EBL	EBT	WBT	WBR	SBLn1
Capacity (veh/h)	1121	-	-	-	585
HCM Lane V/C Ratio	0.01	-	-	-	0.037
HCM Control Delay (s)	8.2	0	-	-	11.4
HCM Lane LOS	A	A	-	-	B
HCM 95th %tile Q(veh)	0	-	-	-	0.1

Intersection	
Int Delay, s/veh	2.8

Movement	EBL	EBT	EBR	WBL	WBT	WBR	NBL	NBT	NBR	SBL	SBT	SBR
Vol, veh/h	10	260	10	20	220	10	30	10	20	10	10	10
Conflicting Peds, #/hr	0	0	0	0	0	0	0	0	0	0	0	0
Sign Control	Free	Free	Free	Free	Free	Free	Stop	Stop	Stop	Stop	Stop	Stop
RT Channelized	-	-	None	-	-	None	-	-	None	-	-	None
Storage Length	-	-	450	-	-	-	-	-	-	-	-	-
Veh in Median Storage, #	-	0	-	-	0	-	-	0	-	-	0	-
Grade, %	-	0	-	-	0	-	-	0	-	-	0	-
Peak Hour Factor	74	74	74	74	74	74	74	74	74	74	74	74
Heavy Vehicles, %	33	33	33	41	41	41	2	2	2	2	2	2
Mvmt Flow	14	351	14	27	297	14	41	14	27	14	14	14

Major/Minor	Major1			Major2			Minor1			Minor2		
Conflicting Flow All	311	0	0	351	0	0	750	743	351	757	736	304
Stage 1	-	-	-	-	-	-	378	378	-	358	358	-
Stage 2	-	-	-	-	-	-	372	365	-	399	378	-
Critical Hdwy	4.43	-	-	4.51	-	-	7.12	6.52	6.22	7.12	6.52	6.22
Critical Hdwy Stg 1	-	-	-	-	-	-	6.12	5.52	-	6.12	5.52	-
Critical Hdwy Stg 2	-	-	-	-	-	-	6.12	5.52	-	6.12	5.52	-
Follow-up Hdwy	2.497	-	-	2.569	-	-	3.518	4.018	3.318	3.518	4.018	3.318
Pot Cap-1 Maneuver	1093	-	-	1021	-	-	328	343	692	324	346	736
Stage 1	-	-	-	-	-	-	644	615	-	660	628	-
Stage 2	-	-	-	-	-	-	648	623	-	627	615	-
Platoon blocked, %		-	-		-	-						
Mov Cap-1 Maneuver	1093	-	-	1021	-	-	301	327	692	291	330	736
Mov Cap-2 Maneuver	-	-	-	-	-	-	301	327	-	291	330	-
Stage 1	-	-	-	-	-	-	634	605	-	649	608	-
Stage 2	-	-	-	-	-	-	602	603	-	580	605	-

Approach	EB	WB	NB	SB
HCM Control Delay, s	0.3	0.7	17.1	15.5
HCM LOS			C	C

Minor Lane/Major Mvmt	NBLn1	EBL	EBT	EBR	WBL	WBT	WBR	SBLn1
Capacity (veh/h)	377	1093	-	-	1021	-	-	383
HCM Lane V/C Ratio	0.215	0.012	-	-	0.026	-	-	0.106
HCM Control Delay (s)	17.1	8.3	0	-	8.6	0	-	15.5
HCM Lane LOS	C	A	A	-	A	A	-	C
HCM 95th %tile Q(veh)	0.8	0	-	-	0.1	-	-	0.4

Intersection	
Int Delay, s/veh	2

Movement	EBL	EBT	EBR	WBL	WBT	WBR	NBL	NBT	NBR	SBL	SBT	SBR
Vol, veh/h	10	290	10	10	210	20	10	10	10	20	10	10
Conflicting Peds, #/hr	0	0	0	0	0	0	0	0	0	0	0	0
Sign Control	Free	Free	Free	Free	Free	Free	Stop	Stop	Stop	Stop	Stop	Stop
RT Channelized	-	-	None	-	-	None	-	-	None	-	-	None
Storage Length	-	-	-	-	-	-	-	-	-	-	-	-
Veh in Median Storage, #	-	0	-	-	0	-	-	0	-	-	0	-
Grade, %	-	0	-	-	0	-	-	0	-	-	0	-
Peak Hour Factor	79	79	79	79	79	79	79	79	79	79	79	79
Heavy Vehicles, %	31	31	31	39	39	39	2	2	2	2	2	2
Mvmt Flow	13	367	13	13	266	25	13	13	13	25	13	13

Major/Minor	Major1			Major2			Minor1			Minor2		
Conflicting Flow All	291	0	0	380	0	0	715	715	373	715	709	278
Stage 1	-	-	-	-	-	-	399	399	-	304	304	-
Stage 2	-	-	-	-	-	-	316	316	-	411	405	-
Critical Hdwy	4.41	-	-	4.49	-	-	7.12	6.52	6.22	7.12	6.52	6.22
Critical Hdwy Stg 1	-	-	-	-	-	-	6.12	5.52	-	6.12	5.52	-
Critical Hdwy Stg 2	-	-	-	-	-	-	6.12	5.52	-	6.12	5.52	-
Follow-up Hdwy	2.479	-	-	2.551	-	-	3.518	4.018	3.318	3.518	4.018	3.318
Pot Cap-1 Maneuver	1122	-	-	1002	-	-	346	356	673	346	359	761
Stage 1	-	-	-	-	-	-	627	602	-	705	663	-
Stage 2	-	-	-	-	-	-	695	655	-	618	598	-
Platoon blocked, %		-	-		-	-						
Mov Cap-1 Maneuver	1122	-	-	1002	-	-	323	345	673	322	348	761
Mov Cap-2 Maneuver	-	-	-	-	-	-	323	345	-	322	348	-
Stage 1	-	-	-	-	-	-	618	593	-	694	652	-
Stage 2	-	-	-	-	-	-	659	645	-	585	589	-

Approach	EB	WB	NB	SB
HCM Control Delay, s	0.3	0.4	14.9	15.8
HCM LOS			B	C

Minor Lane/Major Mvmt	NBLn1	EBL	EBT	EBR	WBL	WBT	WBR	SBLn1
Capacity (veh/h)	401	1122	-	-	1002	-	-	385
HCM Lane V/C Ratio	0.095	0.011	-	-	0.013	-	-	0.132
HCM Control Delay (s)	14.9	8.2	0	-	8.6	0	-	15.8
HCM Lane LOS	B	A	A	-	A	A	-	C
HCM 95th %tile Q(veh)	0.3	0	-	-	0	-	-	0.4

Intersection	
Int Delay, s/veh	4.2

Movement	EBL	EBT	EBR	WBL	WBT	WBR	NBL	NBT	NBR	SBL	SBT	SBR
Vol, veh/h	20	270	20	10	170	40	20	10	10	40	20	50
Conflicting Peds, #/hr	0	0	0	0	0	0	0	0	0	0	0	0
Sign Control	Free	Free	Free	Free	Free	Free	Stop	Stop	Stop	Stop	Stop	Stop
RT Channelized	-	-	None	-	-	None	-	-	None	-	-	None
Storage Length	-	-	-	-	-	450	-	-	-	-	-	-
Veh in Median Storage, #	-	0	-	-	0	-	-	0	-	-	0	-
Grade, %	-	0	-	-	0	-	-	0	-	-	0	-
Peak Hour Factor	72	72	72	72	72	72	72	72	72	72	72	72
Heavy Vehicles, %	31	31	31	39	39	39	2	2	2	2	2	2
Mvmt Flow	28	375	28	14	236	56	28	14	14	56	28	69

Major/Minor	Major1			Major2			Minor1			Minor2		
Conflicting Flow All	236	0	0	403	0	0	757	708	389	722	722	236
Stage 1	-	-	-	-	-	-	444	444	-	264	264	-
Stage 2	-	-	-	-	-	-	313	264	-	458	458	-
Critical Hdwy	4.41	-	-	4.49	-	-	7.12	6.52	6.22	7.12	6.52	6.22
Critical Hdwy Stg 1	-	-	-	-	-	-	6.12	5.52	-	6.12	5.52	-
Critical Hdwy Stg 2	-	-	-	-	-	-	6.12	5.52	-	6.12	5.52	-
Follow-up Hdwy	2.479	-	-	2.551	-	-	3.518	4.018	3.318	3.518	4.018	3.318
Pot Cap-1 Maneuver	1178	-	-	981	-	-	324	360	659	342	353	803
Stage 1	-	-	-	-	-	-	593	575	-	741	690	-
Stage 2	-	-	-	-	-	-	698	690	-	583	567	-
Platoon blocked, %		-	-		-	-						
Mov Cap-1 Maneuver	1178	-	-	981	-	-	267	343	659	313	336	803
Mov Cap-2 Maneuver	-	-	-	-	-	-	267	343	-	313	336	-
Stage 1	-	-	-	-	-	-	575	557	-	718	678	-
Stage 2	-	-	-	-	-	-	601	678	-	539	549	-

Approach	EB	WB	NB	SB
HCM Control Delay, s	0.5	0.4	17.9	17.4
HCM LOS			C	C

Minor Lane/Major Mvmt	NBLn1	EBL	EBT	EBR	WBL	WBT	WBR	SBLn1
Capacity (veh/h)	335	1178	-	-	981	-	-	441
HCM Lane V/C Ratio	0.166	0.024	-	-	0.014	-	-	0.346
HCM Control Delay (s)	17.9	8.1	0	-	8.7	0	-	17.4
HCM Lane LOS	C	A	A	-	A	A	-	C
HCM 95th %tile Q(veh)	0.6	0.1	-	-	0	-	-	1.5

Intersection	
Int Delay, s/veh	2.1

Movement	EBL	EBT	EBR	WBL	WBT	WBR	NBL	NBT	NBR	SBL	SBT	SBR
Vol, veh/h	10	290	10	10	230	10	10	10	10	20	10	10
Conflicting Peds, #/hr	0	0	0	0	0	0	0	0	0	0	0	0
Sign Control	Free	Free	Free	Free	Free	Free	Stop	Stop	Stop	Stop	Stop	Stop
RT Channelized	-	-	None	-	-	None	-	-	None	-	-	None
Storage Length	-	-	-	-	-	-	-	-	-	-	-	-
Veh in Median Storage, #	-	0	-	-	0	-	-	0	-	-	0	-
Grade, %	-	0	-	-	0	-	-	0	-	-	0	-
Peak Hour Factor	77	77	77	77	77	77	77	77	77	77	77	77
Heavy Vehicles, %	29	29	29	36	36	36	2	2	2	2	2	2
Mvmt Flow	13	377	13	13	299	13	13	13	13	26	13	13

Major/Minor	Major1			Major2			Minor1			Minor2		
Conflicting Flow All	312	0	0	390	0	0	753	747	383	753	747	305
Stage 1	-	-	-	-	-	-	409	409	-	331	331	-
Stage 2	-	-	-	-	-	-	344	338	-	422	416	-
Critical Hdwy	4.39	-	-	4.46	-	-	7.12	6.52	6.22	7.12	6.52	6.22
Critical Hdwy Stg 1	-	-	-	-	-	-	6.12	5.52	-	6.12	5.52	-
Critical Hdwy Stg 2	-	-	-	-	-	-	6.12	5.52	-	6.12	5.52	-
Follow-up Hdwy	2.461	-	-	2.524	-	-	3.518	4.018	3.318	3.518	4.018	3.318
Pot Cap-1 Maneuver	1110	-	-	1006	-	-	326	341	664	326	341	735
Stage 1	-	-	-	-	-	-	619	596	-	682	645	-
Stage 2	-	-	-	-	-	-	671	641	-	609	592	-
Platoon blocked, %		-	-		-	-						
Mov Cap-1 Maneuver	1110	-	-	1006	-	-	303	331	664	303	331	735
Mov Cap-2 Maneuver	-	-	-	-	-	-	303	331	-	303	331	-
Stage 1	-	-	-	-	-	-	610	587	-	672	635	-
Stage 2	-	-	-	-	-	-	635	631	-	575	583	-

Approach	EB	WB	NB	SB
HCM Control Delay, s	0.3	0.3	15.5	16.5
HCM LOS			C	C

Minor Lane/Major Mvmt	NBLn1	EBL	EBT	EBR	WBL	WBT	WBR	SBLn1
Capacity (veh/h)	383	1110	-	-	1006	-	-	364
HCM Lane V/C Ratio	0.102	0.012	-	-	0.013	-	-	0.143
HCM Control Delay (s)	15.5	8.3	0	-	8.6	0	-	16.5
HCM Lane LOS	C	A	A	-	A	A	-	C
HCM 95th %tile Q(veh)	0.3	0	-	-	0	-	-	0.5

Intersection	
Int Delay, s/veh	4.2

Movement	EBL	EBT	EBR	WBL	WBT	WBR	NBL	NBT	NBR	SBL	SBT	SBR
Vol, veh/h	20	280	10	10	210	30	20	40	20	30	40	10
Conflicting Peds, #/hr	0	0	0	0	0	0	0	0	0	0	0	0
Sign Control	Free	Free	Free	Free	Free	Free	Stop	Stop	Stop	Stop	Stop	Stop
RT Channelized	-	-	None	-	-	None	-	-	None	-	-	None
Storage Length	-	-	-	-	-	450	-	-	-	-	-	-
Veh in Median Storage, #	-	0	-	-	0	-	-	0	-	-	0	-
Grade, %	-	0	-	-	0	-	-	0	-	-	0	-
Peak Hour Factor	85	85	85	85	85	85	85	85	85	85	85	85
Heavy Vehicles, %	29	29	29	36	36	36	2	2	2	2	2	2
Mvmt Flow	24	329	12	12	247	35	24	47	24	35	47	12

Major/Minor	Major1			Major2			Minor1			Minor2		
Conflicting Flow All	247	0	0	341	0	0	682	653	335	689	659	247
Stage 1	-	-	-	-	-	-	382	382	-	271	271	-
Stage 2	-	-	-	-	-	-	300	271	-	418	388	-
Critical Hdwy	4.39	-	-	4.46	-	-	7.12	6.52	6.22	7.12	6.52	6.22
Critical Hdwy Stg 1	-	-	-	-	-	-	6.12	5.52	-	6.12	5.52	-
Critical Hdwy Stg 2	-	-	-	-	-	-	6.12	5.52	-	6.12	5.52	-
Follow-up Hdwy	2.461	-	-	2.524	-	-	3.518	4.018	3.318	3.518	4.018	3.318
Pot Cap-1 Maneuver	1176	-	-	1051	-	-	364	387	707	360	384	792
Stage 1	-	-	-	-	-	-	640	613	-	735	685	-
Stage 2	-	-	-	-	-	-	709	685	-	612	609	-
Platoon blocked, %		-	-		-	-						
Mov Cap-1 Maneuver	1176	-	-	1051	-	-	314	372	707	305	369	792
Mov Cap-2 Maneuver	-	-	-	-	-	-	314	372	-	305	369	-
Stage 1	-	-	-	-	-	-	624	598	-	717	675	-
Stage 2	-	-	-	-	-	-	641	675	-	531	594	-

Approach	EB	WB	NB	SB
HCM Control Delay, s	0.5	0.3	16.7	18.3
HCM LOS			C	C

Minor Lane/Major Mvmt	NBLn1	EBL	EBT	EBR	WBL	WBT	WBR	SBLn1
Capacity (veh/h)	401	1176	-	-	1051	-	-	365
HCM Lane V/C Ratio	0.235	0.02	-	-	0.011	-	-	0.258
HCM Control Delay (s)	16.7	8.1	0	-	8.5	0	-	18.3
HCM Lane LOS	C	A	A	-	A	A	-	C
HCM 95th %tile Q(veh)	0.9	0.1	-	-	0	-	-	1

Intersection	
Int Delay, s/veh	1.6

Movement	EBL	EBT	EBR	WBL	WBT	WBR	NBL	NBT	NBR	SBL	SBT	SBR
Vol, veh/h	10	310	10	10	250	10	10	10	10	10	10	10
Conflicting Peds, #/hr	0	0	0	0	0	0	0	0	0	0	0	0
Sign Control	Free	Free	Free	Free	Free	Free	Stop	Stop	Stop	Stop	Stop	Stop
RT Channelized	-	-	None	-	-	None	-	-	None	-	-	None
Storage Length	-	-	-	-	-	-	-	-	-	-	-	-
Veh in Median Storage, #	-	0	-	-	0	-	-	0	-	-	0	-
Grade, %	-	0	-	-	0	-	-	0	-	-	0	-
Peak Hour Factor	84	84	84	84	84	84	84	84	84	84	84	84
Heavy Vehicles, %	29	29	29	36	36	36	2	2	2	2	2	2
Mvmt Flow	12	369	12	12	298	12	12	12	12	12	12	12

Major/Minor	Major1			Major2			Minor1			Minor2		
Conflicting Flow All	310	0	0	381	0	0	738	732	375	738	732	304
Stage 1	-	-	-	-	-	-	399	399	-	327	327	-
Stage 2	-	-	-	-	-	-	339	333	-	411	405	-
Critical Hdwy	4.39	-	-	4.46	-	-	7.12	6.52	6.22	7.12	6.52	6.22
Critical Hdwy Stg 1	-	-	-	-	-	-	6.12	5.52	-	6.12	5.52	-
Critical Hdwy Stg 2	-	-	-	-	-	-	6.12	5.52	-	6.12	5.52	-
Follow-up Hdwy	2.461	-	-	2.524	-	-	3.518	4.018	3.318	3.518	4.018	3.318
Pot Cap-1 Maneuver	1112	-	-	1014	-	-	334	348	671	334	348	736
Stage 1	-	-	-	-	-	-	627	602	-	686	648	-
Stage 2	-	-	-	-	-	-	676	644	-	618	598	-
Platoon blocked, %		-	-		-	-						
Mov Cap-1 Maneuver	1112	-	-	1014	-	-	313	338	671	313	338	736
Mov Cap-2 Maneuver	-	-	-	-	-	-	313	338	-	313	338	-
Stage 1	-	-	-	-	-	-	618	594	-	676	639	-
Stage 2	-	-	-	-	-	-	644	635	-	587	590	-

Approach	EB	WB	NB	SB
HCM Control Delay, s	0.3	0.3	15.1	14.9
HCM LOS			C	B

Minor Lane/Major Mvmt	NBLn1	EBL	EBT	EBR	WBL	WBT	WBR	SBLn1
Capacity (veh/h)	392	1112	-	-	1014	-	-	399
HCM Lane V/C Ratio	0.091	0.011	-	-	0.012	-	-	0.09
HCM Control Delay (s)	15.1	8.3	0	-	8.6	0	-	14.9
HCM Lane LOS	C	A	A	-	A	A	-	B
HCM 95th %tile Q(veh)	0.3	0	-	-	0	-	-	0.3

Intersection	
Int Delay, s/veh	2.3

Movement	EBL	EBT	EBR	WBL	WBT	WBR	NBL	NBT	NBR	SBL	SBT	SBR
Vol, veh/h	10	300	10	10	240	20	30	20	10	10	10	10
Conflicting Peds, #/hr	0	0	0	0	0	0	0	0	0	0	0	0
Sign Control	Free	Free	Free	Free	Free	Free	Stop	Stop	Stop	Stop	Stop	Stop
RT Channelized	-	-	None	-	-	None	-	-	None	-	-	None
Storage Length	-	-	-	-	-	-	-	-	-	-	-	-
Veh in Median Storage, #	-	0	-	-	0	-	-	0	-	-	0	-
Grade, %	-	0	-	-	0	-	-	0	-	-	0	-
Peak Hour Factor	92	92	92	92	92	92	92	92	92	92	92	92
Heavy Vehicles, %	26	26	26	36	36	36	2	2	2	2	2	2
Mvmt Flow	11	326	11	11	261	22	33	22	11	11	11	11

Major/Minor	Major1			Major2			Minor1			Minor2		
Conflicting Flow All	283	0	0	337	0	0	657	657	332	663	652	272
Stage 1	-	-	-	-	-	-	353	353	-	293	293	-
Stage 2	-	-	-	-	-	-	304	304	-	370	359	-
Critical Hdwy	4.36	-	-	4.46	-	-	7.12	6.52	6.22	7.12	6.52	6.22
Critical Hdwy Stg 1	-	-	-	-	-	-	6.12	5.52	-	6.12	5.52	-
Critical Hdwy Stg 2	-	-	-	-	-	-	6.12	5.52	-	6.12	5.52	-
Follow-up Hdwy	2.434	-	-	2.524	-	-	3.518	4.018	3.318	3.518	4.018	3.318
Pot Cap-1 Maneuver	1153	-	-	1055	-	-	378	385	710	375	387	767
Stage 1	-	-	-	-	-	-	664	631	-	715	670	-
Stage 2	-	-	-	-	-	-	705	663	-	650	627	-
Platoon blocked, %		-	-		-	-						
Mov Cap-1 Maneuver	1153	-	-	1055	-	-	358	376	710	347	378	767
Mov Cap-2 Maneuver	-	-	-	-	-	-	358	376	-	347	378	-
Stage 1	-	-	-	-	-	-	656	623	-	706	662	-
Stage 2	-	-	-	-	-	-	675	655	-	610	619	-

Approach	EB	WB	NB	SB
HCM Control Delay, s	0.3	0.3	15.8	13.9
HCM LOS			C	B

Minor Lane/Major Mvmt	NBLn1	EBL	EBT	EBR	WBL	WBT	WBR	SBLn1
Capacity (veh/h)	397	1153	-	-	1055	-	-	439
HCM Lane V/C Ratio	0.164	0.009	-	-	0.01	-	-	0.074
HCM Control Delay (s)	15.8	8.2	0	-	8.4	0	-	13.9
HCM Lane LOS	C	A	A	-	A	A	-	B
HCM 95th %tile Q(veh)	0.6	0	-	-	0	-	-	0.2

Intersection	
Int Delay, s/veh	1.5

Movement	EBL	EBT	EBR	WBL	WBT	WBR	NBL	NBT	NBR	SBL	SBT	SBR
Vol, veh/h	10	330	10	10	270	20	10	10	10	10	10	10
Conflicting Peds, #/hr	0	0	0	0	0	0	0	0	0	0	0	0
Sign Control	Free	Free	Free	Free	Free	Free	Stop	Stop	Stop	Stop	Stop	Stop
RT Channelized	-	-	None	-	-	None	-	-	None	-	-	None
Storage Length	-	-	-	-	-	-	-	-	-	-	-	-
Veh in Median Storage, #	-	0	-	-	0	-	-	0	-	-	0	-
Grade, %	-	0	-	-	0	-	-	0	-	-	0	-
Peak Hour Factor	92	92	92	92	92	92	92	92	92	92	92	92
Heavy Vehicles, %	26	26	26	36	36	36	2	2	2	2	2	2
Mvmt Flow	11	359	11	11	293	22	11	11	11	11	11	11

Major/Minor	Major1			Major2			Minor1			Minor2		
Conflicting Flow All	315	0	0	370	0	0	723	723	364	723	717	304
Stage 1	-	-	-	-	-	-	386	386	-	326	326	-
Stage 2	-	-	-	-	-	-	337	337	-	397	391	-
Critical Hdwy	4.36	-	-	4.46	-	-	7.12	6.52	6.22	7.12	6.52	6.22
Critical Hdwy Stg 1	-	-	-	-	-	-	6.12	5.52	-	6.12	5.52	-
Critical Hdwy Stg 2	-	-	-	-	-	-	6.12	5.52	-	6.12	5.52	-
Follow-up Hdwy	2.434	-	-	2.524	-	-	3.518	4.018	3.318	3.518	4.018	3.318
Pot Cap-1 Maneuver	1121	-	-	1024	-	-	342	352	681	342	355	736
Stage 1	-	-	-	-	-	-	637	610	-	687	648	-
Stage 2	-	-	-	-	-	-	677	641	-	629	607	-
Platoon blocked, %		-	-		-	-						
Mov Cap-1 Maneuver	1121	-	-	1024	-	-	323	343	681	322	346	736
Mov Cap-2 Maneuver	-	-	-	-	-	-	323	343	-	322	346	-
Stage 1	-	-	-	-	-	-	629	603	-	679	640	-
Stage 2	-	-	-	-	-	-	647	633	-	601	600	-

Approach	EB	WB	NB	SB
HCM Control Delay, s	0.2	0.3	14.8	14.6
HCM LOS			B	B

Minor Lane/Major Mvmt	NBLn1	EBL	EBT	EBR	WBL	WBT	WBR	SBLn1
Capacity (veh/h)	401	1121	-	-	1024	-	-	408
HCM Lane V/C Ratio	0.081	0.01	-	-	0.011	-	-	0.08
HCM Control Delay (s)	14.8	8.2	0	-	8.6	0	-	14.6
HCM Lane LOS	B	A	A	-	A	A	-	B
HCM 95th %tile Q(veh)	0.3	0	-	-	0	-	-	0.3

Intersection	
Int Delay, s/veh	3.5

Movement	EBL	EBT	EBR	WBL	WBT	WBR	NBL	NBT	NBR	SBL	SBT	SBR
Vol, veh/h	20	280	30	10	250	20	20	50	10	10	40	20
Conflicting Peds, #/hr	0	0	0	0	0	0	0	0	0	0	0	0
Sign Control	Free	Free	Free	Free	Free	Free	Stop	Stop	Stop	Stop	Stop	Stop
RT Channelized	-	-	None	-	-	None	-	-	None	-	-	None
Storage Length	-	-	450	-	-	-	-	-	-	-	-	-
Veh in Median Storage, #	-	0	-	-	0	-	-	0	-	-	0	-
Grade, %	-	0	-	-	0	-	-	0	-	-	0	-
Peak Hour Factor	94	94	94	94	94	94	94	94	94	94	94	94
Heavy Vehicles, %	26	26	26	36	36	36	2	2	2	2	2	2
Mvmt Flow	21	298	32	11	266	21	21	53	11	11	43	21

Major/Minor	Major1			Major2			Minor1			Minor2		
Conflicting Flow All	287	0	0	298	0	0	670	649	298	670	638	277
Stage 1	-	-	-	-	-	-	340	340	-	298	298	-
Stage 2	-	-	-	-	-	-	330	309	-	372	340	-
Critical Hdwy	4.36	-	-	4.46	-	-	7.12	6.52	6.22	7.12	6.52	6.22
Critical Hdwy Stg 1	-	-	-	-	-	-	6.12	5.52	-	6.12	5.52	-
Critical Hdwy Stg 2	-	-	-	-	-	-	6.12	5.52	-	6.12	5.52	-
Follow-up Hdwy	2.434	-	-	2.524	-	-	3.518	4.018	3.318	3.518	4.018	3.318
Pot Cap-1 Maneuver	1149	-	-	1093	-	-	371	389	741	371	394	762
Stage 1	-	-	-	-	-	-	675	639	-	711	667	-
Stage 2	-	-	-	-	-	-	683	660	-	648	639	-
Platoon blocked, %		-	-		-	-						
Mov Cap-1 Maneuver	1149	-	-	1093	-	-	321	376	741	318	381	762
Mov Cap-2 Maneuver	-	-	-	-	-	-	321	376	-	318	381	-
Stage 1	-	-	-	-	-	-	660	625	-	695	659	-
Stage 2	-	-	-	-	-	-	614	652	-	571	625	-

Approach	EB	WB	NB	SB
HCM Control Delay, s	0.5	0.3	17.1	15.1
HCM LOS			C	C

Minor Lane/Major Mvmt	NBLn1	EBL	EBT	EBR	WBL	WBT	WBR	SBLn1
Capacity (veh/h)	383	1149	-	-	1093	-	-	430
HCM Lane V/C Ratio	0.222	0.019	-	-	0.01	-	-	0.173
HCM Control Delay (s)	17.1	8.2	0	-	8.3	0	-	15.1
HCM Lane LOS	C	A	A	-	A	A	-	C
HCM 95th %tile Q(veh)	0.8	0.1	-	-	0	-	-	0.6

Intersection	
Int Delay, s/veh	1.5

Movement	EBL	EBT	EBR	WBL	WBT	WBR	NBL	NBT	NBR	SBL	SBT	SBR
Vol, veh/h	10	290	10	10	260	20	10	10	10	10	10	10
Conflicting Peds, #/hr	0	0	0	0	0	0	0	0	0	0	0	0
Sign Control	Free	Free	Free	Free	Free	Free	Stop	Stop	Stop	Stop	Stop	Stop
RT Channelized	-	-	None	-	-	None	-	-	None	-	-	None
Storage Length	-	-	-	-	-	-	-	-	-	-	-	-
Veh in Median Storage, #	-	0	-	-	0	-	-	0	-	-	0	-
Grade, %	-	0	-	-	0	-	-	0	-	-	0	-
Peak Hour Factor	96	96	96	96	96	96	96	96	96	96	96	96
Heavy Vehicles, %	26	26	26	36	36	36	2	2	2	2	2	2
Mvmt Flow	10	302	10	10	271	21	10	10	10	10	10	10

Major/Minor	Major1			Major2			Minor1			Minor2		
Conflicting Flow All	292	0	0	313	0	0	641	641	307	641	635	281
Stage 1	-	-	-	-	-	-	328	328	-	302	302	-
Stage 2	-	-	-	-	-	-	313	313	-	339	333	-
Critical Hdwy	4.36	-	-	4.46	-	-	7.12	6.52	6.22	7.12	6.52	6.22
Critical Hdwy Stg 1	-	-	-	-	-	-	6.12	5.52	-	6.12	5.52	-
Critical Hdwy Stg 2	-	-	-	-	-	-	6.12	5.52	-	6.12	5.52	-
Follow-up Hdwy	2.434	-	-	2.524	-	-	3.518	4.018	3.318	3.518	4.018	3.318
Pot Cap-1 Maneuver	1144	-	-	1078	-	-	388	393	733	388	396	758
Stage 1	-	-	-	-	-	-	685	647	-	707	664	-
Stage 2	-	-	-	-	-	-	698	657	-	676	644	-
Platoon blocked, %		-	-		-	-						
Mov Cap-1 Maneuver	1144	-	-	1078	-	-	369	384	733	368	387	758
Mov Cap-2 Maneuver	-	-	-	-	-	-	369	384	-	368	387	-
Stage 1	-	-	-	-	-	-	677	640	-	699	657	-
Stage 2	-	-	-	-	-	-	670	650	-	648	637	-

Approach	EB	WB	NB	SB
HCM Control Delay, s	0.3	0.3	13.6	13.5
HCM LOS			B	B

Minor Lane/Major Mvmt	NBLn1	EBL	EBT	EBR	WBL	WBT	WBR	SBLn1
Capacity (veh/h)	449	1144	-	-	1078	-	-	453
HCM Lane V/C Ratio	0.07	0.009	-	-	0.01	-	-	0.069
HCM Control Delay (s)	13.6	8.2	0	-	8.4	0	-	13.5
HCM Lane LOS	B	A	A	-	A	A	-	B
HCM 95th %tile Q(veh)	0.2	0	-	-	0	-	-	0.2

Intersection	
Int Delay, s/veh	2.7

Movement	EBL	EBT	EBR	WBL	WBT	WBR	NBL	NBT	NBR	SBL	SBT	SBR
Vol, veh/h	0	130	180	20	220	0	0	0	0	30	0	70
Conflicting Peds, #/hr	0	0	0	0	0	0	0	0	0	0	0	0
Sign Control	Free	Free	Free	Free	Free	Free	Stop	Stop	Stop	Stop	Stop	Stop
RT Channelized	-	-	Free	-	-	None	-	-	None	-	-	None
Storage Length	-	-	-	135	-	-	-	-	-	-	-	0
Veh in Median Storage, #	-	0	-	-	0	-	-	0	-	-	0	-
Grade, %	-	0	-	-	0	-	-	0	-	-	0	-
Peak Hour Factor	92	92	92	92	92	92	92	92	92	92	92	92
Heavy Vehicles, %	38	38	38	44	44	44	2	2	2	38	2	44
Mvmt Flow	0	141	196	22	239	0	0	0	0	33	0	76

Major/Minor	Major1			Major2			Minor2		
Conflicting Flow All	239	0	-	141	0	0	424	424	239
Stage 1	-	-	-	-	-	-	283	283	-
Stage 2	-	-	-	-	-	-	141	141	-
Critical Hdwy	4.48	-	-	4.54	-	-	6.78	6.52	6.64
Critical Hdwy Stg 1	-	-	-	-	-	-	5.78	5.52	-
Critical Hdwy Stg 2	-	-	-	-	-	-	5.78	5.52	-
Follow-up Hdwy	2.542	-	-	2.596	-	-	3.842	4.018	3.696
Pot Cap-1 Maneuver	1143	-	0	1221	-	-	524	522	707
Stage 1	-	-	0	-	-	-	689	677	-
Stage 2	-	-	0	-	-	-	805	780	-
Platoon blocked, %		-			-	-			
Mov Cap-1 Maneuver	1143	-	-	1221	-	-	515	0	707
Mov Cap-2 Maneuver	-	-	-	-	-	-	515	0	-
Stage 1	-	-	-	-	-	-	677	0	-
Stage 2	-	-	-	-	-	-	805	0	-

Approach	EB	WB	SB
HCM Control Delay, s	0	0.7	11.2
HCM LOS			B

Minor Lane/Major Mvmt	EBL	EBT	WBL	WBT	WBR	SBLn1	SBLn2
Capacity (veh/h)	1143	-	1221	-	-	515	707
HCM Lane V/C Ratio	-	-	0.018	-	-	0.063	0.108
HCM Control Delay (s)	0	-	8	-	-	12.5	10.7
HCM Lane LOS	A	-	A	-	-	B	B
HCM 95th %tile Q(veh)	0	-	0.1	-	-	0.2	0.4

Intersection	
Int Delay, s/veh	5.6

Movement	EBL	EBT	EBR	WBL	WBT	WBR	NBL	NBT	NBR	SBL	SBT	SBR
Vol, veh/h	0	90	70	0	50	30	180	0	20	0	0	0
Conflicting Peds, #/hr	0	0	0	0	0	0	0	0	0	0	0	0
Sign Control	Free	Free	Free	Free	Free	Free	Stop	Stop	Stop	Stop	Stop	Stop
RT Channelized	-	-	None	-	-	None	-	-	None	-	-	None
Storage Length	-	-	-	-	-	-	0	-	0	-	-	-
Veh in Median Storage, #	-	0	-	-	0	-	-	0	-	-	0	-
Grade, %	-	0	-	-	0	-	-	0	-	-	0	-
Peak Hour Factor	86	86	86	86	86	86	86	86	86	86	86	86
Heavy Vehicles, %	38	38	38	44	44	44	44	2	2	2	2	2
Mvmt Flow	0	105	81	0	58	35	209	0	23	0	0	0

Major/Minor	Major1			Major2			Minor1		
Conflicting Flow All	93	0	0	186	0	0	221	238	145
Stage 1	-	-	-	-	-	-	145	145	-
Stage 2	-	-	-	-	-	-	76	93	-
Critical Hdwy	4.48	-	-	4.54	-	-	6.84	6.52	6.22
Critical Hdwy Stg 1	-	-	-	-	-	-	5.84	5.52	-
Critical Hdwy Stg 2	-	-	-	-	-	-	5.84	5.52	-
Follow-up Hdwy	2.542	-	-	2.596	-	-	3.896	4.018	3.318
Pot Cap-1 Maneuver	1303	-	-	1172	-	-	683	663	902
Stage 1	-	-	-	-	-	-	789	777	-
Stage 2	-	-	-	-	-	-	851	818	-
Platoon blocked, %		-	-		-	-			
Mov Cap-1 Maneuver	1303	-	-	1172	-	-	683	0	902
Mov Cap-2 Maneuver	-	-	-	-	-	-	683	0	-
Stage 1	-	-	-	-	-	-	789	0	-
Stage 2	-	-	-	-	-	-	851	0	-

Approach	EB	WB	NB
HCM Control Delay, s	0	0	12.3
HCM LOS			B

Minor Lane/Major Mvmt	NBLn1	NBLn2	EBL	EBT	EBR	WBL	WBT	WBR
Capacity (veh/h)	683	902	1303	-	-	1172	-	-
HCM Lane V/C Ratio	0.306	0.026	-	-	-	-	-	-
HCM Control Delay (s)	12.6	9.1	0	-	-	0	-	-
HCM Lane LOS	B	A	A	-	-	A	-	-
HCM 95th %tile Q(veh)	1.3	0.1	0	-	-	0	-	-

Appendix J
SR-138 (HCS 2010) LOS Worksheets – 2040 Conditions

Phone: Fax:
E-mail:

OPERATIONAL ANALYSIS

Analyst:	ACS
Agency/Co:	Fehr and Peers
Date:	8/21/2014
Analysis Period:	AM Peak Hour
Highway:	I
From/To:	I-5 Connector to 1-Gorman Post
Jurisdiction:	CALTRANS
Analysis Year:	2040 NB
Project ID:	STATE ROUTE 138 HCS ANALYSIS

FREE-FLOW SPEED

Direction	1		2	
Lane width	12.0	ft	12.0	ft
Lateral clearance:				
Right edge	6.0	ft	6.0	ft
Left edge	6.0	ft	6.0	ft
Total lateral clearance	12.0	ft	12.0	ft
Access points per mile	1		1	
Median type	Divided		Divided	
Free-flow speed:	Base		Base	
FFS or BFFS	60.0	mph	60.0	mph
Lane width adjustment, FLW	0.0	mph	0.0	mph
Lateral clearance adjustment, FLC	0.0	mph	0.0	mph
Median type adjustment, FM	0.0	mph	0.0	mph
Access points adjustment, FA	0.3	mph	0.3	mph
Free-flow speed	59.8	mph	59.8	mph

VOLUME

Direction	1		2	
Volume, V	1140	vph	1460	vph
Peak-hour factor, PHF	0.87		0.87	
Peak 15-minute volume, v15	328		420	
Trucks and buses	6	%	6	%
Recreational vehicles	0	%	0	%
Terrain type	Level		Level	
Grade	0.00	%	0.00	%
Segment length	0.00	mi	0.00	mi
Number of lanes	2		2	
Driver population adjustment, fP	1.00		1.00	
Trucks and buses PCE, ET	1.5		1.5	
Recreational vehicles PCE, ER	1.2		1.2	
Heavy vehicle adjustment, fHV	0.971		0.971	
Flow rate, vp	674	pcphpl	864	pcphpl

RESULTS

Direction	1		2	
Flow rate, vp	674	pcphpl	864	pcphpl
Free-flow speed, FFS	59.8	mph	59.8	mph
Avg. passenger-car travel speed, S	60.0	mph	60.0	mph
Level of service, LOS	B		B	
Density, D	11.2	pc/mi/ln	14.4	pc/mi/ln

Bicycle Level of Service

Posted speed limit, Sp		55
Percent of segment with occupied on-highway parking	0	0
Pavement rating, P	3	3
Flow rate in outside lane, vOL	655.2	839.1
Effective width of outside lane, We	24.00	24.00
Effective speed factor, St	4.79	4.79
Bicycle LOS Score, BLOS	3.77	3.90
Bicycle LOS	D	D

Overall results are not computed when free-flow speed is less than 45 mph.

Phone: Fax:
E-mail:

OPERATIONAL ANALYSIS

Analyst:	ACS
Agency/Co:	Fehr and Peers
Date:	8/21/2014
Analysis Period:	PM Peak Hour
Highway:	I
From/To:	I-5 Connector to 1-Gorman Post
Jurisdiction:	CALTRANS
Analysis Year:	2040 NB
Project ID:	STATE ROUTE 138 HCS ANALYSIS

FREE-FLOW SPEED

Direction	1		2	
Lane width	12.0	ft	12.0	ft
Lateral clearance:				
Right edge	6.0	ft	6.0	ft
Left edge	6.0	ft	6.0	ft
Total lateral clearance	12.0	ft	12.0	ft
Access points per mile	1		1	
Median type	Divided		Divided	
Free-flow speed:	Base		Base	
FFS or BFFS	60.0	mph	60.0	mph
Lane width adjustment, FLW	0.0	mph	0.0	mph
Lateral clearance adjustment, FLC	0.0	mph	0.0	mph
Median type adjustment, FM	0.0	mph	0.0	mph
Access points adjustment, FA	0.3	mph	0.3	mph
Free-flow speed	59.8	mph	59.8	mph

VOLUME

Direction	1		2	
Volume, V	1600	vph	1020	vph
Peak-hour factor, PHF	0.86		0.86	
Peak 15-minute volume, v15	465		297	
Trucks and buses	6	%	6	%
Recreational vehicles	0	%	0	%
Terrain type	Level		Level	
Grade	0.00	%	0.00	%
Segment length	0.00	mi	0.00	mi
Number of lanes	2		2	
Driver population adjustment, fP	1.00		1.00	
Trucks and buses PCE, ET	1.5		1.5	
Recreational vehicles PCE, ER	1.2		1.2	
Heavy vehicle adjustment, fHV	0.971		0.971	
Flow rate, vp	958	pcphpl	610	pcphpl

RESULTS

Direction	1		2	
Flow rate, vp	958	pcphpl	610	pcphpl
Free-flow speed, FFS	59.8	mph	59.8	mph
Avg. passenger-car travel speed, S	60.0	mph	60.0	mph
Level of service, LOS	B		A	
Density, D	16.0	pc/mi/ln	10.2	pc/mi/ln

Bicycle Level of Service

Posted speed limit, Sp		55
Percent of segment with occupied on-highway parking	0	0
Pavement rating, P	3	3
Flow rate in outside lane, vOL	930.2	593.0
Effective width of outside lane, We	24.00	24.00
Effective speed factor, St	4.79	4.79
Bicycle LOS Score, BLOS	3.95	3.72
Bicycle LOS	D	D

Overall results are not computed when free-flow speed is less than 45 mph.

Phone: Fax:
E-Mail:

Directional Two-Lane Highway Segment Analysis

Analyst	ACS
Agency/Co.	Fehr and Peers
Date Performed	8/21/2014
Analysis Time Period	AM Peak Hour
Highway	SR-138
From/To	Gorman Post to Private Rd
Jurisdiction	CALTRANS
Analysis Year	2040 NB
Description	STATE ROUTE 138 HCS ANALYSIS

Input Data

Highway class	Class 1		Peak hour factor, PHF	0.79	
Shoulder width	10.0	ft	% Trucks and buses	6	%
Lane width	12.0	ft	% Trucks crawling	0.0	%
Segment length	2.5	mi	Truck crawl speed	0.0	mi/hr
Terrain type	Level		% Recreational vehicles	20	%
Grade: Length	-	mi	% No-passing zones	20	%
Up/down	-	%	Access point density	1	/mi

Analysis direction volume, Vd 1020 veh/h
Opposing direction volume, Vo 940 veh/h

Average Travel Speed

Direction	Analysis(d)		Opposing (o)	
PCE for trucks, ET	1.0		1.0	
PCE for RVs, ER	1.0		1.0	
Heavy-vehicle adj. factor,(note-5) fHV	1.000		1.000	
Grade adj. factor,(note-1) fg	1.00		1.00	
Directional flow rate,(note-2) vi	1291	pc/h	1190	pc/h

Free-Flow Speed from Field Measurement:		
Field measured speed,(note-3) S FM	-	mi/h
Observed total demand,(note-3) V	-	veh/h
Estimated Free-Flow Speed:		
Base free-flow speed,(note-3) BFFS	60.0	mi/h
Adj. for lane and shoulder width,(note-3) fLS	0.0	mi/h
Adj. for access point density,(note-3) fA	0.3	mi/h
Free-flow speed, FFSd	59.8	mi/h
Adjustment for no-passing zones, fnp	0.5	mi/h
Average travel speed, ATSd	40.0	mi/h
Percent Free Flow Speed, PFFS	66.9	%

Percent Time-Spent-Following

Direction	Analysis(d)	Opposing (o)
PCE for trucks, ET	1.0	1.0
PCE for RVs, ER	1.0	1.0
Heavy-vehicle adjustment factor, fHV	1.000	1.000
Grade adjustment factor,(note-1) fg	1.00	1.00
Directional flow rate,(note-2) vi	1291 pc/h	1190 pc/h

Base percent time-spent-following,(note-4) BPTSFd	86.3	%
Adjustment for no-passing zones, fnp	8.9	
Percent time-spent-following, PTSFd	90.9	%

Level of Service and Other Performance Measures

Level of service, LOS	E	
Volume to capacity ratio, v/c	0.52	
Peak 15-min vehicle-miles of travel, VMT15	807	veh-mi
Peak-hour vehicle-miles of travel, VMT60	2550	veh-mi
Peak 15-min total travel time, TT15	20.2	veh-h
Capacity from ATS, CdATS	1700	veh/h
Capacity from PTSF, CdPTSF	1700	veh/h
Directional Capacity	4774	veh/h

Passing Lane Analysis

Total length of analysis segment, Lt	2.5	mi
Length of two-lane highway upstream of the passing lane, Lu	-	mi
Length of passing lane including tapers, Lpl	-	mi
Average travel speed, ATSd (from above)	40.0	mi/h
Percent time-spent-following, PTSFd (from above)	90.9	
Level of service, LOSd (from above)	E	

Average Travel Speed with Passing Lane

Downstream length of two-lane highway within effective length of passing lane for average travel speed, Lde	-	mi
Length of two-lane highway downstream of effective length of the passing lane for average travel speed, Ld	-	mi
Adj. factor for the effect of passing lane on average speed, fpl	-	
Average travel speed including passing lane, ATSpl	-	

Percent Time-Spent-Following with Passing Lane

Downstream length of two-lane highway within effective length of passing lane for percent time-spent-following, Lde	-	mi
Length of two-lane highway downstream of effective length of the passing lane for percent time-spent-following, Ld	-	mi
Adj. factor for the effect of passing lane on percent time-spent-following, fpl	-	
Percent time-spent-following including passing lane, PTSFpl	-	%

Level of Service and Other Performance Measures with Passing Lane

Level of service including passing lane, LOSpl	-	
Peak 15-min total travel time, TT15	-	veh-h

Bicycle Level of Service

Posted speed limit, Sp	55
Percent of segment with occupied on-highway parking	0
Pavement rating, P	3
Flow rate in outside lane, vOL	1291.1
Effective width of outside lane, We	32.00
Effective speed factor, St	4.79
Bicycle LOS Score, BLOS	1.88
Bicycle LOS	B

Notes:

1. Note that the adjustment factor for level terrain is 1.00, as level terrain is one of the base conditions. For the purpose of grade adjustment, specific dewngrade segments are treated as level terrain.
2. If vi (vd or vo) >= 1,700 pc/h, terminate analysis-the LOS is F.
3. For the analysis direction only and for v>200 veh/h.
4. For the analysis direction only.
5. Use alternative Exhibit 15-14 if some trucks operate at crawl speeds on a specific downgrade.

Phone: Fax:
E-Mail:

Directional Two-Lane Highway Segment Analysis

Analyst	ACS
Agency/Co.	Fehr and Peers
Date Performed	8/21/2014
Analysis Time Period	PM Peak Hour
Highway	SR-138
From/To	Gorman Post to Private Rd
Jurisdiction	CALTRANS
Analysis Year	2040 NB
Description	STATE ROUTE 138 HCS ANALYSIS

Input Data

Highway class	Class 1		Peak hour factor, PHF	0.90	
Shoulder width	10.0	ft	% Trucks and buses	6	%
Lane width	12.0	ft	% Trucks crawling	0.0	%
Segment length	2.5	mi	Truck crawl speed	0.0	mi/hr
Terrain type	Level		% Recreational vehicles	20	%
Grade: Length	-	mi	% No-passing zones	20	%
Up/down	-	%	Access point density	1	/mi

Analysis direction volume, Vd 1030 veh/h
Opposing direction volume, Vo 980 veh/h

Average Travel Speed

Direction	Analysis(d)		Opposing (o)	
PCE for trucks, ET	1.0		1.0	
PCE for RVs, ER	1.0		1.0	
Heavy-vehicle adj. factor,(note-5) fHV	1.000		1.000	
Grade adj. factor,(note-1) fg	1.00		1.00	
Directional flow rate,(note-2) vi	1144	pc/h	1089	pc/h

Free-Flow Speed from Field Measurement:

Field measured speed,(note-3) S FM	-	mi/h
Observed total demand,(note-3) V	-	veh/h

Estimated Free-Flow Speed:

Base free-flow speed,(note-3) BFFS	60.0	mi/h
Adj. for lane and shoulder width,(note-3) fLS	0.0	mi/h
Adj. for access point density,(note-3) fA	0.3	mi/h
Free-flow speed, FFSd	59.8	mi/h
Adjustment for no-passing zones, fnp	0.6	mi/h
Average travel speed, ATSd	41.9	mi/h
Percent Free Flow Speed, PFFS	70.1	%

Percent Time-Spent-Following

Direction	Analysis(d)	Opposing (o)
PCE for trucks, ET	1.0	1.0
PCE for RVs, ER	1.0	1.0
Heavy-vehicle adjustment factor, fHV	1.000	1.000
Grade adjustment factor,(note-1) fg	1.00	1.00
Directional flow rate,(note-2) vi	1144 pc/h	1089 pc/h

Base percent time-spent-following,(note-4) BPTSFd	82.2	%
Adjustment for no-passing zones, fnp	11.3	
Percent time-spent-following, PTSFd	88.0	%

Level of Service and Other Performance Measures

Level of service, LOS	E	
Volume to capacity ratio, v/c	0.46	
Peak 15-min vehicle-miles of travel, VMT15	715	veh-mi
Peak-hour vehicle-miles of travel, VMT60	2575	veh-mi
Peak 15-min total travel time, TT15	17.1	veh-h
Capacity from ATS, CdATS	1700	veh/h
Capacity from PTSF, CdPTSF	1700	veh/h
Directional Capacity	4823	veh/h

Passing Lane Analysis

Total length of analysis segment, Lt	2.5	mi
Length of two-lane highway upstream of the passing lane, Lu	-	mi
Length of passing lane including tapers, Lpl	-	mi
Average travel speed, ATSd (from above)	41.9	mi/h
Percent time-spent-following, PTSFd (from above)	88.0	
Level of service, LOSd (from above)	E	

Average Travel Speed with Passing Lane

Downstream length of two-lane highway within effective length of passing lane for average travel speed, Lde	-	mi
Length of two-lane highway downstream of effective length of the passing lane for average travel speed, Ld	-	mi
Adj. factor for the effect of passing lane on average speed, fpl	-	
Average travel speed including passing lane, ATSpl	-	

Percent Time-Spent-Following with Passing Lane

Downstream length of two-lane highway within effective length of passing lane for percent time-spent-following, Lde	-	mi
Length of two-lane highway downstream of effective length of the passing lane for percent time-spent-following, Ld	-	mi
Adj. factor for the effect of passing lane on percent time-spent-following, fpl	-	
Percent time-spent-following including passing lane, PTSFpl	-	%

Level of Service and Other Performance Measures with Passing Lane

Level of service including passing lane, LOSpl	-	
Peak 15-min total travel time, TT15	-	veh-h

Bicycle Level of Service

Posted speed limit, Sp	55
Percent of segment with occupied on-highway parking	0
Pavement rating, P	3
Flow rate in outside lane, vOL	1144.4
Effective width of outside lane, We	32.00
Effective speed factor, St	4.79
Bicycle LOS Score, BLOS	1.82
Bicycle LOS	B

Notes:

1. Note that the adjustment factor for level terrain is 1.00, as level terrain is one of the base conditions. For the purpose of grade adjustment, specific dewngrade segments are treated as level terrain.
2. If vi (vd or vo) >= 1,700 pc/h, terminate analysis-the LOS is F.
3. For the analysis direction only and for v>200 veh/h.
4. For the analysis direction only.
5. Use alternative Exhibit 15-14 if some trucks operate at crawl speeds on a specific downgrade.

Phone: Fax:
E-Mail:

Directional Two-Lane Highway Segment Analysis

Analyst	ACS
Agency/Co.	Fehr and Peers
Date Performed	8/21/2014
Analysis Time Period	AM Peak Hour
Highway	SR-138
From/To	Private Rd to 300th St
Jurisdiction	CALTRANS
Analysis Year	2040 NB
Description	STATE ROUTE 138 HCS ANALYSIS

Input Data

Highway class	Class 1		Peak hour factor, PHF	0.72	
Shoulder width	10.0	ft	% Trucks and buses	6	%
Lane width	12.0	ft	% Trucks crawling	0.0	%
Segment length	4.4	mi	Truck crawl speed	0.0	mi/hr
Terrain type	Level		% Recreational vehicles	20	%
Grade: Length	-	mi	% No-passing zones	20	%
Up/down	-	%	Access point density	1	/mi

Analysis direction volume, Vd 750 veh/h
Opposing direction volume, Vo 930 veh/h

Average Travel Speed

Direction	Analysis(d)		Opposing (o)	
PCE for trucks, ET	1.0		1.0	
PCE for RVs, ER	1.0		1.0	
Heavy-vehicle adj. factor,(note-5) fHV	1.000		1.000	
Grade adj. factor,(note-1) fg	1.00		1.00	
Directional flow rate,(note-2) vi	1042	pc/h	1292	pc/h

Free-Flow Speed from Field Measurement:		
Field measured speed,(note-3) S FM	-	mi/h
Observed total demand,(note-3) V	-	veh/h
Estimated Free-Flow Speed:		
Base free-flow speed,(note-3) BFFS	60.0	mi/h
Adj. for lane and shoulder width,(note-3) fLS	0.0	mi/h
Adj. for access point density,(note-3) fA	0.3	mi/h
Free-flow speed, FFSd	59.8	mi/h
Adjustment for no-passing zones, fnp	0.5	mi/h
Average travel speed, ATSd	41.1	mi/h
Percent Free Flow Speed, PFFS	68.9	%

Percent Time-Spent-Following

Direction	Analysis(d)	Opposing (o)
PCE for trucks, ET	1.0	1.0
PCE for RVs, ER	1.0	1.0
Heavy-vehicle adjustment factor, fHV	1.000	1.000
Grade adjustment factor,(note-1) fg	1.00	1.00
Directional flow rate,(note-2) vi	1042 pc/h	1292 pc/h

Base percent time-spent-following,(note-4) BPTSFd	81.8	%
Adjustment for no-passing zones, fnp	10.3	
Percent time-spent-following, PTSFd	86.4	%

Level of Service and Other Performance Measures

Level of service, LOS	E	
Volume to capacity ratio, v/c	0.49	
Peak 15-min vehicle-miles of travel, VMT15	1146	veh-mi
Peak-hour vehicle-miles of travel, VMT60	3300	veh-mi
Peak 15-min total travel time, TT15	27.9	veh-h
Capacity from ATS, CdATS	1700	veh/h
Capacity from PTSF, CdPTSF	1700	veh/h
Directional Capacity	4771	veh/h

Passing Lane Analysis

Total length of analysis segment, Lt	4.4	mi
Length of two-lane highway upstream of the passing lane, Lu	-	mi
Length of passing lane including tapers, Lpl	-	mi
Average travel speed, ATSd (from above)	41.1	mi/h
Percent time-spent-following, PTSFd (from above)	86.4	
Level of service, LOSd (from above)	E	

Average Travel Speed with Passing Lane

Downstream length of two-lane highway within effective length of passing lane for average travel speed, Lde	-	mi
Length of two-lane highway downstream of effective length of the passing lane for average travel speed, Ld	-	mi
Adj. factor for the effect of passing lane on average speed, fpl	-	
Average travel speed including passing lane, ATSpl	-	

Percent Time-Spent-Following with Passing Lane

Downstream length of two-lane highway within effective length of passing lane for percent time-spent-following, Lde	-	mi
Length of two-lane highway downstream of effective length of the passing lane for percent time-spent-following, Ld	-	mi
Adj. factor for the effect of passing lane on percent time-spent-following, fpl	-	
Percent time-spent-following including passing lane, PTSFpl	-	%

Level of Service and Other Performance Measures with Passing Lane

Level of service including passing lane, LOSpl	-	
Peak 15-min total travel time, TT15	-	veh-h

Bicycle Level of Service

Posted speed limit, Sp	55
Percent of segment with occupied on-highway parking	0
Pavement rating, P	3
Flow rate in outside lane, vOL	1041.7
Effective width of outside lane, We	32.00
Effective speed factor, St	4.79
Bicycle LOS Score, BLOS	1.77
Bicycle LOS	B

Notes:

1. Note that the adjustment factor for level terrain is 1.00, as level terrain is one of the base conditions. For the purpose of grade adjustment, specific dewngrade segments are treated as level terrain.
2. If vi (vd or vo) >= 1,700 pc/h, terminate analysis-the LOS is F.
3. For the analysis direction only and for v>200 veh/h.
4. For the analysis direction only.
5. Use alternative Exhibit 15-14 if some trucks operate at crawl speeds on a specific downgrade.

Phone: Fax:
E-Mail:

Directional Two-Lane Highway Segment Analysis

Analyst	ACS
Agency/Co.	Fehr and Peers
Date Performed	8/21/2014
Analysis Time Period	PM Peak Hour
Highway	SR-138
From/To	Private Rd to 300th St
Jurisdiction	CALTRANS
Analysis Year	2040 NB
Description	STATE ROUTE 138 HCS ANALYSIS

Input Data

Highway class	Class 1		Peak hour factor, PHF	0.77	
Shoulder width	10.0	ft	% Trucks and buses	6	%
Lane width	12.0	ft	% Trucks crawling	0.0	%
Segment length	4.4	mi	Truck crawl speed	0.0	mi/hr
Terrain type	Level		% Recreational vehicles	20	%
Grade: Length	-	mi	% No-passing zones	20	%
Up/down	-	%	Access point density	1	/mi

Analysis direction volume, Vd 1030 veh/h
Opposing direction volume, Vo 760 veh/h

Average Travel Speed

Direction	Analysis(d)		Opposing (o)	
PCE for trucks, ET	1.0		1.0	
PCE for RVs, ER	1.0		1.0	
Heavy-vehicle adj. factor,(note-5) fHV	1.000		1.000	
Grade adj. factor,(note-1) fg	1.00		1.00	
Directional flow rate,(note-2) vi	1338	pc/h	987	pc/h

Free-Flow Speed from Field Measurement:		
Field measured speed,(note-3) S FM	-	mi/h
Observed total demand,(note-3) V	-	veh/h
Estimated Free-Flow Speed:		
Base free-flow speed,(note-3) BFFS	60.0	mi/h
Adj. for lane and shoulder width,(note-3) fLS	0.0	mi/h
Adj. for access point density,(note-3) fA	0.3	mi/h
Free-flow speed, FFSd	59.8	mi/h
Adjustment for no-passing zones, fnp	0.6	mi/h
Average travel speed, ATSd	41.1	mi/h
Percent Free Flow Speed, PFFS	68.8	%

Percent Time-Spent-Following

Direction	Analysis(d)	Opposing (o)
PCE for trucks, ET	1.0	1.0
PCE for RVs, ER	1.0	1.0
Heavy-vehicle adjustment factor, fHV	1.000	1.000
Grade adjustment factor,(note-1) fg	1.00	1.00
Directional flow rate,(note-2) vi	1338 pc/h	987 pc/h

Base percent time-spent-following,(note-4) BPTSFd	85.3	%
Adjustment for no-passing zones, fnp	10.4	
Percent time-spent-following, PTSFd	91.3	%

Level of Service and Other Performance Measures

Level of service, LOS	E	
Volume to capacity ratio, v/c	0.50	
Peak 15-min vehicle-miles of travel, VMT15	1471	veh-mi
Peak-hour vehicle-miles of travel, VMT60	4532	veh-mi
Peak 15-min total travel time, TT15	35.8	veh-h
Capacity from ATS, CdATS	1700	veh/h
Capacity from PTSF, CdPTSF	1700	veh/h
Directional Capacity	4654	veh/h

Passing Lane Analysis

Total length of analysis segment, Lt	4.4	mi
Length of two-lane highway upstream of the passing lane, Lu	-	mi
Length of passing lane including tapers, Lpl	-	mi
Average travel speed, ATSd (from above)	41.1	mi/h
Percent time-spent-following, PTSFd (from above)	91.3	
Level of service, LOSd (from above)	E	

Average Travel Speed with Passing Lane

Downstream length of two-lane highway within effective length of passing lane for average travel speed, Lde	-	mi
Length of two-lane highway downstream of effective length of the passing lane for average travel speed, Ld	-	mi
Adj. factor for the effect of passing lane on average speed, fpl	-	
Average travel speed including passing lane, ATSpl	-	

Percent Time-Spent-Following with Passing Lane

Downstream length of two-lane highway within effective length of passing lane for percent time-spent-following, Lde	-	mi
Length of two-lane highway downstream of effective length of the passing lane for percent time-spent-following, Ld	-	mi
Adj. factor for the effect of passing lane on percent time-spent-following, fpl	-	
Percent time-spent-following including passing lane, PTSFpl	-	%

Level of Service and Other Performance Measures with Passing Lane

Level of service including passing lane, LOSpl	-	
Peak 15-min total travel time, TT15	-	veh-h

Bicycle Level of Service

Posted speed limit, Sp	55
Percent of segment with occupied on-highway parking	0
Pavement rating, P	3
Flow rate in outside lane, vOL	1337.7
Effective width of outside lane, We	32.00
Effective speed factor, St	4.79
Bicycle LOS Score, BLOS	1.89
Bicycle LOS	B

Notes:

1. Note that the adjustment factor for level terrain is 1.00, as level terrain is one of the base conditions. For the purpose of grade adjustment, specific dewngrade segments are treated as level terrain.
2. If vi (vd or vo) >= 1,700 pc/h, terminate analysis-the LOS is F.
3. For the analysis direction only and for v>200 veh/h.
4. For the analysis direction only.
5. Use alternative Exhibit 15-14 if some trucks operate at crawl speeds on a specific downgrade.

Phone: Fax:
E-Mail:

Directional Two-Lane Highway Segment Analysis

Analyst	ACS
Agency/Co.	Fehr and Peers
Date Performed	8/21/2014
Analysis Time Period	AM Peak Hour
Highway	SR-138
From/To	280th St to 270th St
Jurisdiction	CALTRANS
Analysis Year	2040 NB
Description	STATE ROUTE 138 HCS ANALYSIS

Input Data

Highway class	Class 1		Peak hour factor, PHF	0.97	
Shoulder width	10.0	ft	% Trucks and buses	6	%
Lane width	12.0	ft	% Trucks crawling	0.0	%
Segment length	1.3	mi	Truck crawl speed	0.0	mi/hr
Terrain type	Level		% Recreational vehicles	20	%
Grade: Length	-	mi	% No-passing zones	20	%
Up/down	-	%	Access point density	2	/mi

Analysis direction volume, Vd 570 veh/h
Opposing direction volume, Vo 420 veh/h

Average Travel Speed

Direction	Analysis(d)		Opposing (o)	
PCE for trucks, ET	1.1		1.3	
PCE for RVs, ER	1.0		1.0	
Heavy-vehicle adj. factor,(note-5) fHV	0.994		0.982	
Grade adj. factor,(note-1) fg	1.00		1.00	
Directional flow rate,(note-2) vi	591	pc/h	441	pc/h

Free-Flow Speed from Field Measurement:

Field measured speed,(note-3) S FM	-	mi/h
Observed total demand,(note-3) V	-	veh/h

Estimated Free-Flow Speed:

Base free-flow speed,(note-3) BFFS	60.0	mi/h
Adj. for lane and shoulder width,(note-3) fLS	0.0	mi/h
Adj. for access point density,(note-3) fA	0.5	mi/h
Free-flow speed, FFSd	59.5	mi/h
Adjustment for no-passing zones, fnp	1.3	mi/h
Average travel speed, ATSd	50.2	mi/h
Percent Free Flow Speed, PFFS	84.3	%

Percent Time-Spent-Following

Direction	Analysis(d)		Opposing (o)	
PCE for trucks, ET	1.0		1.0	
PCE for RVs, ER	1.0		1.0	
Heavy-vehicle adjustment factor, fHV	1.000		1.000	
Grade adjustment factor,(note-1) fg	1.00		1.00	
Directional flow rate,(note-2) vi	588	pc/h	433	pc/h
Base percent time-spent-following,(note-4) BPTSFd	55.8	%		
Adjustment for no-passing zones, fnp	25.7			
Percent time-spent-following, PTSFd	70.6	%		

Level of Service and Other Performance Measures

Level of service, LOS	D	
Volume to capacity ratio, v/c	0.23	
Peak 15-min vehicle-miles of travel, VMT15	191	veh-mi
Peak-hour vehicle-miles of travel, VMT60	741	veh-mi
Peak 15-min total travel time, TT15	3.8	veh-h
Capacity from ATS, CdATS	1669	veh/h
Capacity from PTSF, CdPTSF	1700	veh/h
Directional Capacity	4584	veh/h

Passing Lane Analysis

Total length of analysis segment, Lt	1.3	mi
Length of two-lane highway upstream of the passing lane, Lu	-	mi
Length of passing lane including tapers, Lpl	-	mi
Average travel speed, ATSd (from above)	50.2	mi/h
Percent time-spent-following, PTSFd (from above)	70.6	
Level of service, LOSd (from above)	D	

Average Travel Speed with Passing Lane

Downstream length of two-lane highway within effective length of passing lane for average travel speed, Lde	-	mi
Length of two-lane highway downstream of effective length of the passing lane for average travel speed, Ld	-	mi
Adj. factor for the effect of passing lane on average speed, fpl	-	
Average travel speed including passing lane, ATSpl	-	

Percent Time-Spent-Following with Passing Lane

Downstream length of two-lane highway within effective length of passing lane for percent time-spent-following, Lde	-	mi
Length of two-lane highway downstream of effective length of the passing lane for percent time-spent-following, Ld	-	mi
Adj. factor for the effect of passing lane on percent time-spent-following, fpl	-	
Percent time-spent-following including passing lane, PTSFpl	-	%

Level of Service and Other Performance Measures with Passing Lane

Level of service including passing lane, LOSpl	-	
Peak 15-min total travel time, TT15	-	veh-h

Bicycle Level of Service

Posted speed limit, Sp	55
Percent of segment with occupied on-highway parking	0
Pavement rating, P	3
Flow rate in outside lane, vOL	587.6
Effective width of outside lane, We	32.00
Effective speed factor, St	4.79
Bicycle LOS Score, BLOS	1.48
Bicycle LOS	A

Notes:

1. Note that the adjustment factor for level terrain is 1.00, as level terrain is one of the base conditions. For the purpose of grade adjustment, specific dewngrade segments are treated as level terrain.
2. If vi (vd or vo) >= 1,700 pc/h, terminate analysis-the LOS is F.
3. For the analysis direction only and for v>200 veh/h.
4. For the analysis direction only.
5. Use alternative Exhibit 15-14 if some trucks operate at crawl speeds on a specific downgrade.

Phone: Fax:
E-Mail:

Directional Two-Lane Highway Segment Analysis

Analyst	ACS
Agency/Co.	Fehr and Peers
Date Performed	8/21/2014
Analysis Time Period	PM Peak Hour
Highway	SR-138
From/To	280th St to 270th St
Jurisdiction	CALTRANS
Analysis Year	2040 NB
Description	STATE ROUTE 138 HCS ANALYSIS

Input Data

Highway class	Class 1		Peak hour factor, PHF	0.90	
Shoulder width	10.0	ft	% Trucks and buses	6	%
Lane width	12.0	ft	% Trucks crawling	0.0	%
Segment length	1.3	mi	Truck crawl speed	0.0	mi/hr
Terrain type	Level		% Recreational vehicles	20	%
Grade: Length	-	mi	% No-passing zones	20	%
Up/down	-	%	Access point density	2	/mi

Analysis direction volume, Vd 470 veh/h
Opposing direction volume, Vo 550 veh/h

Average Travel Speed

Direction	Analysis(d)		Opposing (o)	
PCE for trucks, ET	1.2		1.1	
PCE for RVs, ER	1.0		1.0	
Heavy-vehicle adj. factor,(note-5) fHV	0.988		0.994	
Grade adj. factor,(note-1) fg	1.00		1.00	
Directional flow rate,(note-2) vi	529	pc/h	615	pc/h

Free-Flow Speed from Field Measurement:		
Field measured speed,(note-3) S FM	-	mi/h
Observed total demand,(note-3) V	-	veh/h
Estimated Free-Flow Speed:		
Base free-flow speed,(note-3) BFFS	60.0	mi/h
Adj. for lane and shoulder width,(note-3) fLS	0.0	mi/h
Adj. for access point density,(note-3) fA	0.5	mi/h
Free-flow speed, FFSd	59.5	mi/h
Adjustment for no-passing zones, fnp	1.0	mi/h
Average travel speed, ATSd	49.6	mi/h
Percent Free Flow Speed, PFFS	83.3	%

Percent Time-Spent-Following

Direction	Analysis(d)		Opposing (o)	
PCE for trucks, ET	1.0		1.0	
PCE for RVs, ER	1.0		1.0	
Heavy-vehicle adjustment factor, fHV	1.000		1.000	
Grade adjustment factor,(note-1) fg	1.00		1.00	
Directional flow rate,(note-2) vi	522	pc/h	611	pc/h
Base percent time-spent-following,(note-4) BPTSFd	54.0	%		
Adjustment for no-passing zones, fnp	24.9			
Percent time-spent-following, PTSFd	65.5	%		

Level of Service and Other Performance Measures

Level of service, LOS	D	
Volume to capacity ratio, v/c	0.24	
Peak 15-min vehicle-miles of travel, VMT15	170	veh-mi
Peak-hour vehicle-miles of travel, VMT60	611	veh-mi
Peak 15-min total travel time, TT15	3.4	veh-h
Capacity from ATS, CdATS	1690	veh/h
Capacity from PTSF, CdPTSF	1700	veh/h
Directional Capacity	4833	veh/h

Passing Lane Analysis

Total length of analysis segment, Lt	1.3	mi
Length of two-lane highway upstream of the passing lane, Lu	-	mi
Length of passing lane including tapers, Lpl	-	mi
Average travel speed, ATSd (from above)	49.6	mi/h
Percent time-spent-following, PTSFd (from above)	65.5	
Level of service, LOSd (from above)	D	

Average Travel Speed with Passing Lane

Downstream length of two-lane highway within effective length of passing lane for average travel speed, Lde	-	mi
Length of two-lane highway downstream of effective length of the passing lane for average travel speed, Ld	-	mi
Adj. factor for the effect of passing lane on average speed, fpl	-	
Average travel speed including passing lane, ATSpl	-	

Percent Time-Spent-Following with Passing Lane

Downstream length of two-lane highway within effective length of passing lane for percent time-spent-following, Lde	-	mi
Length of two-lane highway downstream of effective length of the passing lane for percent time-spent-following, Ld	-	mi
Adj. factor for the effect of passing lane on percent time-spent-following, fpl	-	
Percent time-spent-following including passing lane, PTSFpl	-	%

Level of Service and Other Performance Measures with Passing Lane

Level of service including passing lane, LOSpl	-	
Peak 15-min total travel time, TT15	-	veh-h

Bicycle Level of Service

Posted speed limit, Sp	55
Percent of segment with occupied on-highway parking	0
Pavement rating, P	3
Flow rate in outside lane, vOL	522.2
Effective width of outside lane, We	32.00
Effective speed factor, St	4.79
Bicycle LOS Score, BLOS	1.42
Bicycle LOS	A

Notes:

1. Note that the adjustment factor for level terrain is 1.00, as level terrain is one of the base conditions. For the purpose of grade adjustment, specific dewngrade segments are treated as level terrain.
2. If vi (vd or vo) >= 1,700 pc/h, terminate analysis-the LOS is F.
3. For the analysis direction only and for v>200 veh/h.
4. For the analysis direction only.
5. Use alternative Exhibit 15-14 if some trucks operate at crawl speeds on a specific downgrade.

Phone: Fax:
E-Mail:

Directional Two-Lane Highway Segment Analysis

Analyst	ACS
Agency/Co.	Fehr and Peers
Date Performed	8/21/2014
Analysis Time Period	AM Peak Hour
Highway	SR-138
From/To	Three Points Rd to 245th St
Jurisdiction	CALTRANS
Analysis Year	2040 NB
Description	STATE ROUTE 138 HCS ANALYSIS

Input Data

Highway class	Class 1		Peak hour factor, PHF	0.79	
Shoulder width	10.0	ft	% Trucks and buses	6	%
Lane width	12.0	ft	% Trucks crawling	0.0	%
Segment length	1.6	mi	Truck crawl speed	0.0	mi/hr
Terrain type	Level		% Recreational vehicles	20	%
Grade: Length	-	mi	% No-passing zones	20	%
Up/down	-	%	Access point density	3	/mi

Analysis direction volume, Vd 530 veh/h
Opposing direction volume, Vo 510 veh/h

Average Travel Speed

Direction	Analysis(d)		Opposing (o)	
PCE for trucks, ET	1.1		1.1	
PCE for RVs, ER	1.0		1.0	
Heavy-vehicle adj. factor,(note-5) fHV	0.994		0.994	
Grade adj. factor,(note-1) fg	1.00		1.00	
Directional flow rate,(note-2) vi	675	pc/h	649	pc/h

Free-Flow Speed from Field Measurement:		
Field measured speed,(note-3) S FM	-	mi/h
Observed total demand,(note-3) V	-	veh/h
Estimated Free-Flow Speed:		
Base free-flow speed,(note-3) BFFS	60.0	mi/h
Adj. for lane and shoulder width,(note-3) fLS	0.0	mi/h
Adj. for access point density,(note-3) fA	0.8	mi/h
Free-flow speed, FFSd	59.3	mi/h
Adjustment for no-passing zones, fnp	1.0	mi/h
Average travel speed, ATSd	48.0	mi/h
Percent Free Flow Speed, PFFS	81.1	%

Percent Time-Spent-Following

Direction	Analysis(d)		Opposing (o)	
PCE for trucks, ET	1.0		1.0	
PCE for RVs, ER	1.0		1.0	
Heavy-vehicle adjustment factor, fHV	1.000		1.000	
Grade adjustment factor,(note-1) fg	1.00		1.00	
Directional flow rate,(note-2) vi	671	pc/h	646	pc/h
Base percent time-spent-following,(note-4) BPTSFd	62.4	%		
Adjustment for no-passing zones, fnp	21.7			
Percent time-spent-following, PTSFd	73.5	%		

Level of Service and Other Performance Measures

Level of service, LOS	D	
Volume to capacity ratio, v/c	0.28	
Peak 15-min vehicle-miles of travel, VMT15	268	veh-mi
Peak-hour vehicle-miles of travel, VMT60	848	veh-mi
Peak 15-min total travel time, TT15	5.6	veh-h
Capacity from ATS, CdATS	1690	veh/h
Capacity from PTSF, CdPTSF	1700	veh/h
Directional Capacity	4809	veh/h

Passing Lane Analysis

Total length of analysis segment, Lt	1.6	mi
Length of two-lane highway upstream of the passing lane, Lu	-	mi
Length of passing lane including tapers, Lpl	-	mi
Average travel speed, ATSd (from above)	48.0	mi/h
Percent time-spent-following, PTSFd (from above)	73.5	
Level of service, LOSd (from above)	D	

Average Travel Speed with Passing Lane

Downstream length of two-lane highway within effective length of passing lane for average travel speed, Lde	-	mi
Length of two-lane highway downstream of effective length of the passing lane for average travel speed, Ld	-	mi
Adj. factor for the effect of passing lane on average speed, fpl	-	
Average travel speed including passing lane, ATSpl	-	

Percent Time-Spent-Following with Passing Lane

Downstream length of two-lane highway within effective length of passing lane for percent time-spent-following, Lde	-	mi
Length of two-lane highway downstream of effective length of the passing lane for percent time-spent-following, Ld	-	mi
Adj. factor for the effect of passing lane on percent time-spent-following, fpl	-	
Percent time-spent-following including passing lane, PTSFpl	-	%

Level of Service and Other Performance Measures with Passing Lane

Level of service including passing lane, LOSpl	-	
Peak 15-min total travel time, TT15	-	veh-h

Bicycle Level of Service

Posted speed limit, Sp	55
Percent of segment with occupied on-highway parking	0
Pavement rating, P	3
Flow rate in outside lane, vOL	670.9
Effective width of outside lane, We	32.00
Effective speed factor, St	4.79
Bicycle LOS Score, BLOS	1.54
Bicycle LOS	B

Notes:

1. Note that the adjustment factor for level terrain is 1.00, as level terrain is one of the base conditions. For the purpose of grade adjustment, specific dewngrade segments are treated as level terrain.
2. If vi (vd or vo) >= 1,700 pc/h, terminate analysis-the LOS is F.
3. For the analysis direction only and for v>200 veh/h.
4. For the analysis direction only.
5. Use alternative Exhibit 15-14 if some trucks operate at crawl speeds on a specific downgrade.

Phone: Fax:
E-Mail:

Directional Two-Lane Highway Segment Analysis

Analyst	ACS
Agency/Co.	Fehr and Peers
Date Performed	8/21/2014
Analysis Time Period	PM Peak Hour
Highway	SR-138
From/To	Three Points Rd to 245th St
Jurisdiction	CALTRANS
Analysis Year	2040 NB
Description	STATE ROUTE 138 HCS ANALYSIS

Input Data

Highway class	Class 1		Peak hour factor, PHF	0.89	
Shoulder width	10.0	ft	% Trucks and buses	6	%
Lane width	12.0	ft	% Trucks crawling	0.0	%
Segment length	1.6	mi	Truck crawl speed	0.0	mi/hr
Terrain type	Level		% Recreational vehicles	20	%
Grade: Length	-	mi	% No-passing zones	20	%
Up/down	-	%	Access point density	3	/mi

Analysis direction volume, Vd 540 veh/h
Opposing direction volume, Vo 610 veh/h

Average Travel Speed

Direction	Analysis(d)		Opposing (o)	
PCE for trucks, ET	1.1		1.1	
PCE for RVs, ER	1.0		1.0	
Heavy-vehicle adj. factor,(note-5) fHV	0.994		0.994	
Grade adj. factor,(note-1) fg	1.00		1.00	
Directional flow rate,(note-2) vi	610	pc/h	690	pc/h

Free-Flow Speed from Field Measurement:		
Field measured speed,(note-3) S FM	-	mi/h
Observed total demand,(note-3) V	-	veh/h
Estimated Free-Flow Speed:		
Base free-flow speed,(note-3) BFFS	60.0	mi/h
Adj. for lane and shoulder width,(note-3) fLS	0.0	mi/h
Adj. for access point density,(note-3) fA	0.8	mi/h
Free-flow speed, FFSd	59.3	mi/h
Adjustment for no-passing zones, fnp	0.9	mi/h
Average travel speed, ATSd	48.3	mi/h
Percent Free Flow Speed, PFFS	81.5	%

Percent Time-Spent-Following

Direction	Analysis(d)		Opposing (o)	
PCE for trucks, ET	1.0		1.0	
PCE for RVs, ER	1.0		1.0	
Heavy-vehicle adjustment factor, fHV	1.000		1.000	
Grade adjustment factor,(note-1) fg	1.00		1.00	
Directional flow rate,(note-2) vi	607	pc/h	685	pc/h
Base percent time-spent-following,(note-4) BPTSFd	59.5	%		
Adjustment for no-passing zones, fnp	21.9			
Percent time-spent-following, PTSFd	69.8	%		

Level of Service and Other Performance Measures

Level of service, LOS	D	
Volume to capacity ratio, v/c	0.27	
Peak 15-min vehicle-miles of travel, VMT15	243	veh-mi
Peak-hour vehicle-miles of travel, VMT60	864	veh-mi
Peak 15-min total travel time, TT15	5.0	veh-h
Capacity from ATS, CdATS	1690	veh/h
Capacity from PTSF, CdPTSF	1700	veh/h
Directional Capacity	4873	veh/h

Passing Lane Analysis

Total length of analysis segment, Lt	1.6	mi
Length of two-lane highway upstream of the passing lane, Lu	-	mi
Length of passing lane including tapers, Lpl	-	mi
Average travel speed, ATSd (from above)	48.3	mi/h
Percent time-spent-following, PTSFd (from above)	69.8	
Level of service, LOSd (from above)	D	

Average Travel Speed with Passing Lane

Downstream length of two-lane highway within effective length of passing lane for average travel speed, Lde	-	mi
Length of two-lane highway downstream of effective length of the passing lane for average travel speed, Ld	-	mi
Adj. factor for the effect of passing lane on average speed, fpl	-	
Average travel speed including passing lane, ATSpl	-	

Percent Time-Spent-Following with Passing Lane

Downstream length of two-lane highway within effective length of passing lane for percent time-spent-following, Lde	-	mi
Length of two-lane highway downstream of effective length of the passing lane for percent time-spent-following, Ld	-	mi
Adj. factor for the effect of passing lane on percent time-spent-following, fpl	-	
Percent time-spent-following including passing lane, PTSFpl	-	%

Level of Service and Other Performance Measures with Passing Lane

Level of service including passing lane, LOSpl	-	
Peak 15-min total travel time, TT15	-	veh-h

Bicycle Level of Service

Posted speed limit, Sp	55
Percent of segment with occupied on-highway parking	0
Pavement rating, P	3
Flow rate in outside lane, vOL	606.7
Effective width of outside lane, We	32.00
Effective speed factor, St	4.79
Bicycle LOS Score, BLOS	1.49
Bicycle LOS	A

Notes:

1. Note that the adjustment factor for level terrain is 1.00, as level terrain is one of the base conditions. For the purpose of grade adjustment, specific dewngrade segments are treated as level terrain.
2. If vi (vd or vo) >= 1,700 pc/h, terminate analysis-the LOS is F.
3. For the analysis direction only and for v>200 veh/h.
4. For the analysis direction only.
5. Use alternative Exhibit 15-14 if some trucks operate at crawl speeds on a specific downgrade.

Phone: Fax:
E-Mail:

Directional Two-Lane Highway Segment Analysis

Analyst	ACS
Agency/Co.	Fehr and Peers
Date Performed	8/21/2014
Analysis Time Period	AM Peak Hour
Highway	SR-138
From/To	230th St to 190th St
Jurisdiction	CALTRANS
Analysis Year	2040 NB
Description	STATE ROUTE 138 HCS ANALYSIS

Input Data

Highway class	Class 1		Peak hour factor, PHF	0.82	
Shoulder width	10.0	ft	% Trucks and buses	4	%
Lane width	12.0	ft	% Trucks crawling	0.0	%
Segment length	1.6	mi	Truck crawl speed	0.0	mi/hr
Terrain type	Level		% Recreational vehicles	20	%
Grade: Length	-	mi	% No-passing zones	20	%
Up/down	-	%	Access point density	2	/mi

Analysis direction volume, Vd 490 veh/h
Opposing direction volume, Vo 540 veh/h

Average Travel Speed

Direction	Analysis(d)		Opposing (o)	
PCE for trucks, ET	1.1		1.1	
PCE for RVs, ER	1.0		1.0	
Heavy-vehicle adj. factor,(note-5) fHV	0.996		0.996	
Grade adj. factor,(note-1) fg	1.00		1.00	
Directional flow rate,(note-2) vi	600	pc/h	661	pc/h

Free-Flow Speed from Field Measurement:		
Field measured speed,(note-3) S FM	-	mi/h
Observed total demand,(note-3) V	-	veh/h
Estimated Free-Flow Speed:		
Base free-flow speed,(note-3) BFFS	60.0	mi/h
Adj. for lane and shoulder width,(note-3) fLS	0.0	mi/h
Adj. for access point density,(note-3) fA	0.5	mi/h
Free-flow speed, FFSd	59.5	mi/h
Adjustment for no-passing zones, fnp	0.9	mi/h
Average travel speed, ATSd	48.8	mi/h
Percent Free Flow Speed, PFFS	82.0	%

Percent Time-Spent-Following

Direction	Analysis(d)		Opposing (o)	
PCE for trucks, ET	1.0		1.0	
PCE for RVs, ER	1.0		1.0	
Heavy-vehicle adjustment factor, fHV	1.000		1.000	
Grade adjustment factor,(note-1) fg	1.00		1.00	
Directional flow rate,(note-2) vi	598	pc/h	659	pc/h
Base percent time-spent-following,(note-4) BPTSFd	59.3	%		
Adjustment for no-passing zones, fnp	22.8			
Percent time-spent-following, PTSFd	70.1	%		

Level of Service and Other Performance Measures

Level of service, LOS	D	
Volume to capacity ratio, v/c	0.27	
Peak 15-min vehicle-miles of travel, VMT15	239	veh-mi
Peak-hour vehicle-miles of travel, VMT60	784	veh-mi
Peak 15-min total travel time, TT15	4.9	veh-h
Capacity from ATS, CdATS	1693	veh/h
Capacity from PTSF, CdPTSF	1700	veh/h
Directional Capacity	4733	veh/h

Passing Lane Analysis

Total length of analysis segment, Lt	1.6	mi
Length of two-lane highway upstream of the passing lane, Lu	-	mi
Length of passing lane including tapers, Lpl	-	mi
Average travel speed, ATSd (from above)	48.8	mi/h
Percent time-spent-following, PTSFd (from above)	70.1	
Level of service, LOSd (from above)	D	

Average Travel Speed with Passing Lane

Downstream length of two-lane highway within effective length of passing lane for average travel speed, Lde	-	mi
Length of two-lane highway downstream of effective length of the passing lane for average travel speed, Ld	-	mi
Adj. factor for the effect of passing lane on average speed, fpl	-	
Average travel speed including passing lane, ATSpl	-	

Percent Time-Spent-Following with Passing Lane

Downstream length of two-lane highway within effective length of passing lane for percent time-spent-following, Lde	-	mi
Length of two-lane highway downstream of effective length of the passing lane for percent time-spent-following, Ld	-	mi
Adj. factor for the effect of passing lane on percent time-spent-following, fpl	-	
Percent time-spent-following including passing lane, PTSFpl	-	%

Level of Service and Other Performance Measures with Passing Lane

Level of service including passing lane, LOSpl	-	
Peak 15-min total travel time, TT15	-	veh-h

Bicycle Level of Service

Posted speed limit, Sp	55
Percent of segment with occupied on-highway parking	0
Pavement rating, P	3
Flow rate in outside lane, vOL	597.6
Effective width of outside lane, We	32.00
Effective speed factor, St	4.79
Bicycle LOS Score, BLOS	0.88
Bicycle LOS	A

Notes:

1. Note that the adjustment factor for level terrain is 1.00, as level terrain is one of the base conditions. For the purpose of grade adjustment, specific dewngrade segments are treated as level terrain.
2. If vi (vd or vo) >= 1,700 pc/h, terminate analysis-the LOS is F.
3. For the analysis direction only and for v>200 veh/h.
4. For the analysis direction only.
5. Use alternative Exhibit 15-14 if some trucks operate at crawl speeds on a specific downgrade.

Phone: Fax:
E-Mail:

Directional Two-Lane Highway Segment Analysis

Analyst	ACS
Agency/Co.	Fehr and Peers
Date Performed	8/21/2014
Analysis Time Period	PM Peak Hour
Highway	SR-138
From/To	230th St to 190th St
Jurisdiction	CALTRANS
Analysis Year	2040 NB
Description	STATE ROUTE 138 HCS ANALYSIS

Input Data

Highway class	Class 1		Peak hour factor, PHF	0.88	
Shoulder width	10.0	ft	% Trucks and buses	4	%
Lane width	12.0	ft	% Trucks crawling	0.0	%
Segment length	1.6	mi	Truck crawl speed	0.0	mi/hr
Terrain type	Level		% Recreational vehicles	20	%
Grade: Length	-	mi	% No-passing zones	20	%
Up/down	-	%	Access point density	2	/mi

Analysis direction volume, Vd 560 veh/h
Opposing direction volume, Vo 570 veh/h

Average Travel Speed

Direction	Analysis(d)		Opposing (o)	
PCE for trucks, ET	1.1		1.1	
PCE for RVs, ER	1.0		1.0	
Heavy-vehicle adj. factor,(note-5) fHV	0.996		0.996	
Grade adj. factor,(note-1) fg	1.00		1.00	
Directional flow rate,(note-2) vi	639	pc/h	650	pc/h

Free-Flow Speed from Field Measurement:		
Field measured speed,(note-3) S FM	-	mi/h
Observed total demand,(note-3) V	-	veh/h
Estimated Free-Flow Speed:		
Base free-flow speed,(note-3) BFFS	60.0	mi/h
Adj. for lane and shoulder width,(note-3) fLS	0.0	mi/h
Adj. for access point density,(note-3) fA	0.5	mi/h
Free-flow speed, FFSd	59.5	mi/h
Adjustment for no-passing zones, fnp	1.0	mi/h
Average travel speed, ATSd	48.5	mi/h
Percent Free Flow Speed, PFFS	81.6	%

Percent Time-Spent-Following

Direction	Analysis(d)		Opposing (o)	
PCE for trucks, ET	1.0		1.0	
PCE for RVs, ER	1.0		1.0	
Heavy-vehicle adjustment factor, fHV	1.000		1.000	
Grade adjustment factor,(note-1) fg	1.00		1.00	
Directional flow rate,(note-2) vi	636	pc/h	648	pc/h
Base percent time-spent-following,(note-4) BPTSFd	60.7	%		
Adjustment for no-passing zones, fnp	22.6			
Percent time-spent-following, PTSFd	71.9	%		

Level of Service and Other Performance Measures

Level of service, LOS	D	
Volume to capacity ratio, v/c	0.27	
Peak 15-min vehicle-miles of travel, VMT15	255	veh-mi
Peak-hour vehicle-miles of travel, VMT60	896	veh-mi
Peak 15-min total travel time, TT15	5.3	veh-h
Capacity from ATS, CdATS	1693	veh/h
Capacity from PTSF, CdPTSF	1700	veh/h
Directional Capacity	4853	veh/h

Passing Lane Analysis

Total length of analysis segment, Lt	1.6	mi
Length of two-lane highway upstream of the passing lane, Lu	-	mi
Length of passing lane including tapers, Lpl	-	mi
Average travel speed, ATSd (from above)	48.5	mi/h
Percent time-spent-following, PTSFd (from above)	71.9	
Level of service, LOSd (from above)	D	

Average Travel Speed with Passing Lane

Downstream length of two-lane highway within effective length of passing lane for average travel speed, Lde	-	mi
Length of two-lane highway downstream of effective length of the passing lane for average travel speed, Ld	-	mi
Adj. factor for the effect of passing lane on average speed, fpl	-	
Average travel speed including passing lane, ATSpl	-	

Percent Time-Spent-Following with Passing Lane

Downstream length of two-lane highway within effective length of passing lane for percent time-spent-following, Lde	-	mi
Length of two-lane highway downstream of effective length of the passing lane for percent time-spent-following, Ld	-	mi
Adj. factor for the effect of passing lane on percent time-spent-following, fpl	-	
Percent time-spent-following including passing lane, PTSFpl	-	%

Level of Service and Other Performance Measures with Passing Lane

Level of service including passing lane, LOSpl	-	
Peak 15-min total travel time, TT15	-	veh-h

Bicycle Level of Service

Posted speed limit, Sp	55
Percent of segment with occupied on-highway parking	0
Pavement rating, P	3
Flow rate in outside lane, vOL	636.4
Effective width of outside lane, We	32.00
Effective speed factor, St	4.79
Bicycle LOS Score, BLOS	0.91
Bicycle LOS	A

Notes:

1. Note that the adjustment factor for level terrain is 1.00, as level terrain is one of the base conditions. For the purpose of grade adjustment, specific dewngrade segments are treated as level terrain.
2. If vi (vd or vo) >= 1,700 pc/h, terminate analysis-the LOS is F.
3. For the analysis direction only and for v>200 veh/h.
4. For the analysis direction only.
5. Use alternative Exhibit 15-14 if some trucks operate at crawl speeds on a specific downgrade.

Phone: Fax:
E-Mail:

Directional Two-Lane Highway Segment Analysis

Analyst	ACS
Agency/Co.	Fehr and Peers
Date Performed	8/21/2014
Analysis Time Period	AM Peak Hour
Highway	SR-138
From/To	190th St to 130th St
Jurisdiction	CALTRANS
Analysis Year	2040 NB
Description	STATE ROUTE 138 HCS ANALYSIS

Input Data

Highway class	Class 1		Peak hour factor, PHF	0.72	
Shoulder width	10.0	ft	% Trucks and buses	4	%
Lane width	12.0	ft	% Trucks crawling	0.0	%
Segment length	6.0	mi	Truck crawl speed	0.0	mi/hr
Terrain type	Level		% Recreational vehicles	20	%
Grade: Length	-	mi	% No-passing zones	20	%
Up/down	-	%	Access point density	2	/mi

Analysis direction volume, Vd 340 veh/h
Opposing direction volume, Vo 560 veh/h

Average Travel Speed

Direction	Analysis(d)		Opposing (o)	
PCE for trucks, ET	1.2		1.1	
PCE for RVs, ER	1.0		1.0	
Heavy-vehicle adj. factor,(note-5) fHV	0.992		0.996	
Grade adj. factor,(note-1) fg	1.00		1.00	
Directional flow rate,(note-2) vi	476	pc/h	781	pc/h

Free-Flow Speed from Field Measurement:		
Field measured speed,(note-3) S FM	-	mi/h
Observed total demand,(note-3) V	-	veh/h
Estimated Free-Flow Speed:		
Base free-flow speed,(note-3) BFFS	60.0	mi/h
Adj. for lane and shoulder width,(note-3) fLS	0.0	mi/h
Adj. for access point density,(note-3) fA	0.5	mi/h
Free-flow speed, FFSd	59.5	mi/h
Adjustment for no-passing zones, fnp	0.6	mi/h
Average travel speed, ATSd	49.1	mi/h
Percent Free Flow Speed, PFFS	82.5	%

Percent Time-Spent-Following

Direction	Analysis(d)		Opposing (o)	
PCE for trucks, ET	1.0		1.0	
PCE for RVs, ER	1.0		1.0	
Heavy-vehicle adjustment factor, fHV	1.000		1.000	
Grade adjustment factor,(note-1) fg	1.00		1.00	
Directional flow rate,(note-2) vi	472	pc/h	778	pc/h
Base percent time-spent-following,(note-4) BPTSFd	53.3	%		
Adjustment for no-passing zones, fnp	20.3			
Percent time-spent-following, PTSFd	61.0	%		

Level of Service and Other Performance Measures

Level of service, LOS	C	
Volume to capacity ratio, v/c	0.28	
Peak 15-min vehicle-miles of travel, VMT15	708	veh-mi
Peak-hour vehicle-miles of travel, VMT60	2040	veh-mi
Peak 15-min total travel time, TT15	14.4	veh-h
Capacity from ATS, CdATS	1693	veh/h
Capacity from PTSF, CdPTSF	1700	veh/h
Directional Capacity	4418	veh/h

Passing Lane Analysis

Total length of analysis segment, Lt	6.0	mi
Length of two-lane highway upstream of the passing lane, Lu	-	mi
Length of passing lane including tapers, Lpl	-	mi
Average travel speed, ATSd (from above)	49.1	mi/h
Percent time-spent-following, PTSFd (from above)	61.0	
Level of service, LOSd (from above)	C	

Average Travel Speed with Passing Lane

Downstream length of two-lane highway within effective length of passing lane for average travel speed, Lde	-	mi
Length of two-lane highway downstream of effective length of the passing lane for average travel speed, Ld	-	mi
Adj. factor for the effect of passing lane on average speed, fpl	-	
Average travel speed including passing lane, ATSpl	-	

Percent Time-Spent-Following with Passing Lane

Downstream length of two-lane highway within effective length of passing lane for percent time-spent-following, Lde	-	mi
Length of two-lane highway downstream of effective length of the passing lane for percent time-spent-following, Ld	-	mi
Adj. factor for the effect of passing lane on percent time-spent-following, fpl	-	
Percent time-spent-following including passing lane, PTSFpl	-	%

Level of Service and Other Performance Measures with Passing Lane

Level of service including passing lane, LOSpl	-	
Peak 15-min total travel time, TT15	-	veh-h

Bicycle Level of Service

Posted speed limit, Sp	55
Percent of segment with occupied on-highway parking	0
Pavement rating, P	3
Flow rate in outside lane, vOL	472.2
Effective width of outside lane, We	32.00
Effective speed factor, St	4.79
Bicycle LOS Score, BLOS	0.76
Bicycle LOS	A

Notes:

1. Note that the adjustment factor for level terrain is 1.00, as level terrain is one of the base conditions. For the purpose of grade adjustment, specific dewngrade segments are treated as level terrain.
2. If vi (vd or vo) >= 1,700 pc/h, terminate analysis-the LOS is F.
3. For the analysis direction only and for v>200 veh/h.
4. For the analysis direction only.
5. Use alternative Exhibit 15-14 if some trucks operate at crawl speeds on a specific downgrade.

Phone: Fax:
E-Mail:

Directional Two-Lane Highway Segment Analysis

Analyst	ACS
Agency/Co.	Fehr and Peers
Date Performed	8/21/2014
Analysis Time Period	PM Peak Hour
Highway	SR-138
From/To	190th St to 130th St
Jurisdiction	CALTRANS
Analysis Year	2040 NB
Description	STATE ROUTE 138 HCS ANALYSIS

Input Data

Highway class	Class 1		Peak hour factor, PHF	0.89	
Shoulder width	10.0	ft	% Trucks and buses	4	%
Lane width	12.0	ft	% Trucks crawling	0.0	%
Segment length	6.0	mi	Truck crawl speed	0.0	mi/hr
Terrain type	Level		% Recreational vehicles	20	%
Grade: Length	-	mi	% No-passing zones	20	%
Up/down	-	%	Access point density	2	/mi

Analysis direction volume, Vd 600 veh/h
Opposing direction volume, Vo 480 veh/h

Average Travel Speed

Direction	Analysis(d)		Opposing (o)	
PCE for trucks, ET	1.1		1.2	
PCE for RVs, ER	1.0		1.0	
Heavy-vehicle adj. factor,(note-5) fHV	0.996		0.992	
Grade adj. factor,(note-1) fg	1.00		1.00	
Directional flow rate,(note-2) vi	677	pc/h	544	pc/h

Free-Flow Speed from Field Measurement:

Field measured speed,(note-3) S FM	-	mi/h
Observed total demand,(note-3) V	-	veh/h

Estimated Free-Flow Speed:

Base free-flow speed,(note-3) BFFS	60.0	mi/h
Adj. for lane and shoulder width,(note-3) fLS	0.0	mi/h
Adj. for access point density,(note-3) fA	0.5	mi/h
Free-flow speed, FFSd	59.5	mi/h
Adjustment for no-passing zones, fnp	1.2	mi/h
Average travel speed, ATSd	48.9	mi/h
Percent Free Flow Speed, PFFS	82.1	%

Percent Time-Spent-Following

Direction	Analysis(d)		Opposing (o)	
PCE for trucks, ET	1.0		1.0	
PCE for RVs, ER	1.0		1.0	
Heavy-vehicle adjustment factor, fHV	1.000		1.000	
Grade adjustment factor,(note-1) fg	1.00		1.00	
Directional flow rate,(note-2) vi	674	pc/h	539	pc/h
Base percent time-spent-following,(note-4) BPTSFd	61.8	%		
Adjustment for no-passing zones, fnp	22.9			
Percent time-spent-following, PTSFd	74.5	%		

Level of Service and Other Performance Measures

Level of service, LOS	D	
Volume to capacity ratio, v/c	0.26	
Peak 15-min vehicle-miles of travel, VMT15	1011	veh-mi
Peak-hour vehicle-miles of travel, VMT60	3600	veh-mi
Peak 15-min total travel time, TT15	20.7	veh-h
Capacity from ATS, CdATS	1686	veh/h
Capacity from PTSF, CdPTSF	1700	veh/h
Directional Capacity	4727	veh/h

Passing Lane Analysis

Total length of analysis segment, Lt	6.0	mi
Length of two-lane highway upstream of the passing lane, Lu	-	mi
Length of passing lane including tapers, Lpl	-	mi
Average travel speed, ATSd (from above)	48.9	mi/h
Percent time-spent-following, PTSFd (from above)	74.5	
Level of service, LOSd (from above)	D	

Average Travel Speed with Passing Lane

Downstream length of two-lane highway within effective length of passing lane for average travel speed, Lde	-	mi
Length of two-lane highway downstream of effective length of the passing lane for average travel speed, Ld	-	mi
Adj. factor for the effect of passing lane on average speed, fpl	-	
Average travel speed including passing lane, ATSpl	-	

Percent Time-Spent-Following with Passing Lane

Downstream length of two-lane highway within effective length of passing lane for percent time-spent-following, Lde	-	mi
Length of two-lane highway downstream of effective length of the passing lane for percent time-spent-following, Ld	-	mi
Adj. factor for the effect of passing lane on percent time-spent-following, fpl	-	
Percent time-spent-following including passing lane, PTSFpl	-	%

Level of Service and Other Performance Measures with Passing Lane

Level of service including passing lane, LOSpl	-	
Peak 15-min total travel time, TT15	-	veh-h

Bicycle Level of Service

Posted speed limit, Sp	55
Percent of segment with occupied on-highway parking	0
Pavement rating, P	3
Flow rate in outside lane, vOL	674.2
Effective width of outside lane, We	32.00
Effective speed factor, St	4.79
Bicycle LOS Score, BLOS	0.94
Bicycle LOS	A

Notes:

1. Note that the adjustment factor for level terrain is 1.00, as level terrain is one of the base conditions. For the purpose of grade adjustment, specific dewngrade segments are treated as level terrain.
2. If vi (vd or vo) >= 1,700 pc/h, terminate analysis-the LOS is F.
3. For the analysis direction only and for v>200 veh/h.
4. For the analysis direction only.
5. Use alternative Exhibit 15-14 if some trucks operate at crawl speeds on a specific downgrade.

Phone: Fax:
E-Mail:

Directional Two-Lane Highway Segment Analysis

Analyst	ACS
Agency/Co.	Fehr and Peers
Date Performed	8/21/2014
Analysis Time Period	AM Peak Hour
Highway	SR-138
From/To	130th St to 80th St
Jurisdiction	CALTRANS
Analysis Year	2040 NB
Description	STATE ROUTE 138 HCS ANALYSIS

Input Data

Highway class	Class 1		Peak hour factor, PHF	0.85	
Shoulder width	10.0	ft	% Trucks and buses	4	%
Lane width	12.0	ft	% Trucks crawling	0.0	%
Segment length	5.0	mi	Truck crawl speed	0.0	mi/hr
Terrain type	Level		% Recreational vehicles	20	%
Grade: Length	-	mi	% No-passing zones	20	%
Up/down	-	%	Access point density	3	/mi

Analysis direction volume, Vd 500 veh/h
Opposing direction volume, Vo 530 veh/h

Average Travel Speed

Direction	Analysis(d)		Opposing (o)	
PCE for trucks, ET	1.1		1.1	
PCE for RVs, ER	1.0		1.0	
Heavy-vehicle adj. factor,(note-5) fHV	0.996		0.996	
Grade adj. factor,(note-1) fg	1.00		1.00	
Directional flow rate,(note-2) vi	591	pc/h	626	pc/h

Free-Flow Speed from Field Measurement:

Field measured speed,(note-3) S FM	-	mi/h
Observed total demand,(note-3) V	-	veh/h

Estimated Free-Flow Speed:

Base free-flow speed,(note-3) BFFS	60.0	mi/h
Adj. for lane and shoulder width,(note-3) fLS	0.0	mi/h
Adj. for access point density,(note-3) fA	0.8	mi/h
Free-flow speed, FFSd	59.3	mi/h
Adjustment for no-passing zones, fnp	1.0	mi/h
Average travel speed, ATSd	48.8	mi/h
Percent Free Flow Speed, PFFS	82.4	%

Percent Time-Spent-Following

Direction	Analysis(d)		Opposing (o)	
PCE for trucks, ET	1.0		1.0	
PCE for RVs, ER	1.0		1.0	
Heavy-vehicle adjustment factor, fHV	1.000		1.000	
Grade adjustment factor,(note-1) fg	1.00		1.00	
Directional flow rate,(note-2) vi	588	pc/h	624	pc/h
Base percent time-spent-following,(note-4) BPTSFd	57.3	%		
Adjustment for no-passing zones, fnp	24.0			
Percent time-spent-following, PTSFd	68.9	%		

Level of Service and Other Performance Measures

Level of service, LOS	D	
Volume to capacity ratio, v/c	0.25	
Peak 15-min vehicle-miles of travel, VMT15	735	veh-mi
Peak-hour vehicle-miles of travel, VMT60	2500	veh-mi
Peak 15-min total travel time, TT15	15.1	veh-h
Capacity from ATS, CdATS	1693	veh/h
Capacity from PTSF, CdPTSF	1700	veh/h
Directional Capacity	4791	veh/h

Passing Lane Analysis

Total length of analysis segment, Lt	5.0	mi
Length of two-lane highway upstream of the passing lane, Lu	-	mi
Length of passing lane including tapers, Lpl	-	mi
Average travel speed, ATSd (from above)	48.8	mi/h
Percent time-spent-following, PTSFd (from above)	68.9	
Level of service, LOSd (from above)	D	

Average Travel Speed with Passing Lane

Downstream length of two-lane highway within effective length of passing lane for average travel speed, Lde	-	mi
Length of two-lane highway downstream of effective length of the passing lane for average travel speed, Ld	-	mi
Adj. factor for the effect of passing lane on average speed, fpl	-	
Average travel speed including passing lane, ATSpl	-	

Percent Time-Spent-Following with Passing Lane

Downstream length of two-lane highway within effective length of passing lane for percent time-spent-following, Lde	-	mi
Length of two-lane highway downstream of effective length of the passing lane for percent time-spent-following, Ld	-	mi
Adj. factor for the effect of passing lane on percent time-spent-following, fpl	-	
Percent time-spent-following including passing lane, PTSFpl	-	%

Level of Service and Other Performance Measures with Passing Lane

Level of service including passing lane, LOSpl	-	
Peak 15-min total travel time, TT15	-	veh-h

Bicycle Level of Service

Posted speed limit, Sp	55
Percent of segment with occupied on-highway parking	0
Pavement rating, P	3
Flow rate in outside lane, vOL	588.2
Effective width of outside lane, We	32.00
Effective speed factor, St	4.79
Bicycle LOS Score, BLOS	0.87
Bicycle LOS	A

Notes:

1. Note that the adjustment factor for level terrain is 1.00, as level terrain is one of the base conditions. For the purpose of grade adjustment, specific dewngrade segments are treated as level terrain.
2. If vi (vd or vo) >= 1,700 pc/h, terminate analysis-the LOS is F.
3. For the analysis direction only and for v>200 veh/h.
4. For the analysis direction only.
5. Use alternative Exhibit 15-14 if some trucks operate at crawl speeds on a specific downgrade.

Phone: Fax:
E-Mail:

Directional Two-Lane Highway Segment Analysis

Analyst	ACS
Agency/Co.	Fehr and Peers
Date Performed	8/21/2014
Analysis Time Period	PM Peak Hour
Highway	SR-138
From/To	130th St to 80th St
Jurisdiction	CALTRANS
Analysis Year	2040 NB
Description	STATE ROUTE 138 HCS ANALYSIS

Input Data

Highway class	Class 1		Peak hour factor, PHF	0.91	
Shoulder width	10.0	ft	% Trucks and buses	4	%
Lane width	12.0	ft	% Trucks crawling	0.0	%
Segment length	5.0	mi	Truck crawl speed	0.0	mi/hr
Terrain type	Level		% Recreational vehicles	20	%
Grade: Length	-	mi	% No-passing zones	20	%
Up/down	-	%	Access point density	3	/mi

Analysis direction volume, Vd 600 veh/h
Opposing direction volume, Vo 580 veh/h

Average Travel Speed

Direction	Analysis(d)		Opposing (o)	
PCE for trucks, ET	1.1		1.1	
PCE for RVs, ER	1.0		1.0	
Heavy-vehicle adj. factor,(note-5) fHV	0.996		0.996	
Grade adj. factor,(note-1) fg	1.00		1.00	
Directional flow rate,(note-2) vi	662	pc/h	640	pc/h

Free-Flow Speed from Field Measurement:

Field measured speed,(note-3) S FM	-	mi/h
Observed total demand,(note-3) V	-	veh/h

Estimated Free-Flow Speed:

Base free-flow speed,(note-3) BFFS	60.0	mi/h
Adj. for lane and shoulder width,(note-3) fLS	0.0	mi/h
Adj. for access point density,(note-3) fA	0.8	mi/h
Free-flow speed, FFSd	59.3	mi/h
Adjustment for no-passing zones, fnp	1.0	mi/h
Average travel speed, ATSd	48.2	mi/h
Percent Free Flow Speed, PFFS	81.3	%

Percent Time-Spent-Following

Direction	Analysis(d)		Opposing (o)	
PCE for trucks, ET	1.0		1.0	
PCE for RVs, ER	1.0		1.0	
Heavy-vehicle adjustment factor, fHV	1.000		1.000	
Grade adjustment factor,(note-1) fg	1.00		1.00	
Directional flow rate,(note-2) vi	659	pc/h	637	pc/h
Base percent time-spent-following,(note-4) BPTSFd	61.2	%		
Adjustment for no-passing zones, fnp	22.2			
Percent time-spent-following, PTSFd	72.5	%		

Level of Service and Other Performance Measures

Level of service, LOS	D	
Volume to capacity ratio, v/c	0.27	
Peak 15-min vehicle-miles of travel, VMT15	824	veh-mi
Peak-hour vehicle-miles of travel, VMT60	3000	veh-mi
Peak 15-min total travel time, TT15	17.1	veh-h
Capacity from ATS, CdATS	1693	veh/h
Capacity from PTSF, CdPTSF	1700	veh/h
Directional Capacity	4827	veh/h

Passing Lane Analysis

Total length of analysis segment, Lt	5.0	mi
Length of two-lane highway upstream of the passing lane, Lu	-	mi
Length of passing lane including tapers, Lpl	-	mi
Average travel speed, ATSd (from above)	48.2	mi/h
Percent time-spent-following, PTSFd (from above)	72.5	
Level of service, LOSd (from above)	D	

Average Travel Speed with Passing Lane

Downstream length of two-lane highway within effective length of passing lane for average travel speed, Lde	-	mi
Length of two-lane highway downstream of effective length of the passing lane for average travel speed, Ld	-	mi
Adj. factor for the effect of passing lane on average speed, fpl	-	
Average travel speed including passing lane, ATSpl	-	

Percent Time-Spent-Following with Passing Lane

Downstream length of two-lane highway within effective length of passing lane for percent time-spent-following, Lde	-	mi
Length of two-lane highway downstream of effective length of the passing lane for percent time-spent-following, Ld	-	mi
Adj. factor for the effect of passing lane on percent time-spent-following, fpl	-	
Percent time-spent-following including passing lane, PTSFpl	-	%

Level of Service and Other Performance Measures with Passing Lane

Level of service including passing lane, LOSpl	-	
Peak 15-min total travel time, TT15	-	veh-h

Bicycle Level of Service

Posted speed limit, Sp	55
Percent of segment with occupied on-highway parking	0
Pavement rating, P	3
Flow rate in outside lane, vOL	659.3
Effective width of outside lane, We	32.00
Effective speed factor, St	4.79
Bicycle LOS Score, BLOS	0.93
Bicycle LOS	A

Notes:

1. Note that the adjustment factor for level terrain is 1.00, as level terrain is one of the base conditions. For the purpose of grade adjustment, specific dewngrade segments are treated as level terrain.
2. If vi (vd or vo) >= 1,700 pc/h, terminate analysis-the LOS is F.
3. For the analysis direction only and for v>200 veh/h.
4. For the analysis direction only.
5. Use alternative Exhibit 15-14 if some trucks operate at crawl speeds on a specific downgrade.

Phone: Fax:
E-Mail:

Directional Two-Lane Highway Segment Analysis

Analyst	ACS
Agency/Co.	Fehr and Peers
Date Performed	8/21/2014
Analysis Time Period	AM Peak Hour
Highway	SR-138
From/To	80th St to 30th St
Jurisdiction	CALTRANS
Analysis Year	2040 NB
Description	STATE ROUTE 138 HCS ANALYSIS

Input Data

Highway class	Class 1		Peak hour factor, PHF	0.94	
Shoulder width	10.0	ft	% Trucks and buses	4	%
Lane width	12.0	ft	% Trucks crawling	0.0	%
Segment length	5.0	mi	Truck crawl speed	0.0	mi/hr
Terrain type	Level		% Recreational vehicles	20	%
Grade: Length	-	mi	% No-passing zones	20	%
Up/down	-	%	Access point density	3	/mi

Analysis direction volume, Vd 520 veh/h
Opposing direction volume, Vo 500 veh/h

Average Travel Speed

Direction	Analysis(d)		Opposing (o)	
PCE for trucks, ET	1.1		1.2	
PCE for RVs, ER	1.0		1.0	
Heavy-vehicle adj. factor,(note-5) fHV	0.996		0.992	
Grade adj. factor,(note-1) fg	1.00		1.00	
Directional flow rate,(note-2) vi	555	pc/h	536	pc/h

Free-Flow Speed from Field Measurement:

Field measured speed,(note-3) S FM	-	mi/h
Observed total demand,(note-3) V	-	veh/h

Estimated Free-Flow Speed:

Base free-flow speed,(note-3) BFFS	60.0	mi/h
Adj. for lane and shoulder width,(note-3) fLS	0.0	mi/h
Adj. for access point density,(note-3) fA	0.8	mi/h
Free-flow speed, FFSd	59.3	mi/h
Adjustment for no-passing zones, fnp	1.2	mi/h
Average travel speed, ATSd	49.6	mi/h
Percent Free Flow Speed, PFFS	83.7	%

Percent Time-Spent-Following

Direction	Analysis(d)		Opposing (o)	
PCE for trucks, ET	1.0		1.0	
PCE for RVs, ER	1.0		1.0	
Heavy-vehicle adjustment factor, fHV	1.000		1.000	
Grade adjustment factor,(note-1) fg	1.00		1.00	
Directional flow rate,(note-2) vi	553	pc/h	532	pc/h
Base percent time-spent-following,(note-4) BPTSFd	54.6	%		
Adjustment for no-passing zones, fnp	26.9			
Percent time-spent-following, PTSFd	68.3	%		

Level of Service and Other Performance Measures

Level of service, LOS	D	
Volume to capacity ratio, v/c	0.23	
Peak 15-min vehicle-miles of travel, VMT15	691	veh-mi
Peak-hour vehicle-miles of travel, VMT60	2600	veh-mi
Peak 15-min total travel time, TT15	13.9	veh-h
Capacity from ATS, CdATS	1686	veh/h
Capacity from PTSF, CdPTSF	1700	veh/h
Directional Capacity	4806	veh/h

Passing Lane Analysis

Total length of analysis segment, Lt	5.0	mi
Length of two-lane highway upstream of the passing lane, Lu	-	mi
Length of passing lane including tapers, Lpl	-	mi
Average travel speed, ATSd (from above)	49.6	mi/h
Percent time-spent-following, PTSFd (from above)	68.3	
Level of service, LOSd (from above)	D	

Average Travel Speed with Passing Lane

Downstream length of two-lane highway within effective length of passing lane for average travel speed, Lde	-	mi
Length of two-lane highway downstream of effective length of the passing lane for average travel speed, Ld	-	mi
Adj. factor for the effect of passing lane on average speed, fpl	-	
Average travel speed including passing lane, ATSpl	-	

Percent Time-Spent-Following with Passing Lane

Downstream length of two-lane highway within effective length of passing lane for percent time-spent-following, Lde	-	mi
Length of two-lane highway downstream of effective length of the passing lane for percent time-spent-following, Ld	-	mi
Adj. factor for the effect of passing lane on percent time-spent-following, fpl	-	
Percent time-spent-following including passing lane, PTSFpl	-	%

Level of Service and Other Performance Measures with Passing Lane

Level of service including passing lane, LOSpl	-	
Peak 15-min total travel time, TT15	-	veh-h

Bicycle Level of Service

Posted speed limit, Sp	55
Percent of segment with occupied on-highway parking	0
Pavement rating, P	3
Flow rate in outside lane, vOL	553.2
Effective width of outside lane, We	32.00
Effective speed factor, St	4.79
Bicycle LOS Score, BLOS	0.84
Bicycle LOS	A

Notes:

1. Note that the adjustment factor for level terrain is 1.00, as level terrain is one of the base conditions. For the purpose of grade adjustment, specific dewngrade segments are treated as level terrain.
2. If vi (vd or vo) >= 1,700 pc/h, terminate analysis-the LOS is F.
3. For the analysis direction only and for v>200 veh/h.
4. For the analysis direction only.
5. Use alternative Exhibit 15-14 if some trucks operate at crawl speeds on a specific downgrade.

Phone: Fax:
E-Mail:

Directional Two-Lane Highway Segment Analysis

Analyst	ACS
Agency/Co.	Fehr and Peers
Date Performed	8/21/2014
Analysis Time Period	PM Peak Hour
Highway	SR-138
From/To	80th St to 30th St
Jurisdiction	CALTRANS
Analysis Year	2040 NB
Description	STATE ROUTE 138 HCS ANALYSIS

Input Data

Highway class	Class 1		Peak hour factor, PHF	0.94	
Shoulder width	10.0	ft	% Trucks and buses	4	%
Lane width	12.0	ft	% Trucks crawling	0.0	%
Segment length	5.0	mi	Truck crawl speed	0.0	mi/hr
Terrain type	Level		% Recreational vehicles	20	%
Grade: Length	-	mi	% No-passing zones	20	%
Up/down	-	%	Access point density	3	/mi

Analysis direction volume, Vd 620 veh/h
Opposing direction volume, Vo 570 veh/h

Average Travel Speed

Direction	Analysis(d)		Opposing (o)	
PCE for trucks, ET	1.1		1.1	
PCE for RVs, ER	1.0		1.0	
Heavy-vehicle adj. factor,(note-5) fHV	0.996		0.996	
Grade adj. factor,(note-1) fg	1.00		1.00	
Directional flow rate,(note-2) vi	662	pc/h	609	pc/h

Free-Flow Speed from Field Measurement:

Field measured speed,(note-3) S FM	-	mi/h
Observed total demand,(note-3) V	-	veh/h

Estimated Free-Flow Speed:

Base free-flow speed,(note-3) BFFS	60.0	mi/h
Adj. for lane and shoulder width,(note-3) fLS	0.0	mi/h
Adj. for access point density,(note-3) fA	0.8	mi/h
Free-flow speed, FFSd	59.3	mi/h
Adjustment for no-passing zones, fnp	1.0	mi/h
Average travel speed, ATSd	48.3	mi/h
Percent Free Flow Speed, PFFS	81.6	%

Percent Time-Spent-Following

Direction	Analysis(d)		Opposing (o)	
PCE for trucks, ET	1.0		1.0	
PCE for RVs, ER	1.0		1.0	
Heavy-vehicle adjustment factor, fHV	1.000		1.000	
Grade adjustment factor,(note-1) fg	1.00		1.00	
Directional flow rate,(note-2) vi	660	pc/h	606	pc/h
Base percent time-spent-following,(note-4) BPTSFd	60.6	%		
Adjustment for no-passing zones, fnp	22.6			
Percent time-spent-following, PTSFd	72.4	%		

Level of Service and Other Performance Measures

Level of service, LOS	D	
Volume to capacity ratio, v/c	0.27	
Peak 15-min vehicle-miles of travel, VMT15	824	veh-mi
Peak-hour vehicle-miles of travel, VMT60	3100	veh-mi
Peak 15-min total travel time, TT15	17.0	veh-h
Capacity from ATS, CdATS	1693	veh/h
Capacity from PTSF, CdPTSF	1700	veh/h
Directional Capacity	4752	veh/h

Passing Lane Analysis

Total length of analysis segment, Lt	5.0	mi
Length of two-lane highway upstream of the passing lane, Lu	-	mi
Length of passing lane including tapers, Lpl	-	mi
Average travel speed, ATSd (from above)	48.3	mi/h
Percent time-spent-following, PTSFd (from above)	72.4	
Level of service, LOSd (from above)	D	

Average Travel Speed with Passing Lane

Downstream length of two-lane highway within effective length of passing lane for average travel speed, Lde	-	mi
Length of two-lane highway downstream of effective length of the passing lane for average travel speed, Ld	-	mi
Adj. factor for the effect of passing lane on average speed, fpl	-	
Average travel speed including passing lane, ATSpl	-	

Percent Time-Spent-Following with Passing Lane

Downstream length of two-lane highway within effective length of passing lane for percent time-spent-following, Lde	-	mi
Length of two-lane highway downstream of effective length of the passing lane for percent time-spent-following, Ld	-	mi
Adj. factor for the effect of passing lane on percent time-spent-following, fpl	-	
Percent time-spent-following including passing lane, PTSFpl	-	%

Level of Service and Other Performance Measures with Passing Lane

Level of service including passing lane, LOSpl	-	
Peak 15-min total travel time, TT15	-	veh-h

Bicycle Level of Service

Posted speed limit, Sp	55
Percent of segment with occupied on-highway parking	0
Pavement rating, P	3
Flow rate in outside lane, vOL	659.6
Effective width of outside lane, We	32.00
Effective speed factor, St	4.79
Bicycle LOS Score, BLOS	0.93
Bicycle LOS	A

Notes:

1. Note that the adjustment factor for level terrain is 1.00, as level terrain is one of the base conditions. For the purpose of grade adjustment, specific dewngrade segments are treated as level terrain.
2. If vi (vd or vo) >= 1,700 pc/h, terminate analysis-the LOS is F.
3. For the analysis direction only and for v>200 veh/h.
4. For the analysis direction only.
5. Use alternative Exhibit 15-14 if some trucks operate at crawl speeds on a specific downgrade.

Phone: Fax:
E-Mail:

Directional Two-Lane Highway Segment Analysis

Analyst	ACS
Agency/Co.	Fehr and Peers
Date Performed	8/21/2014
Analysis Time Period	AM Peak Hour
Highway	SR-138
From/To	30th St to Route 14
Jurisdiction	CALTRANS
Analysis Year	2040 NB
Description	STATE ROUTE 138 HCS ANALYSIS

Input Data

Highway class	Class 1		Peak hour factor, PHF	0.89	
Shoulder width	10.0	ft	% Trucks and buses	4	%
Lane width	12.0	ft	% Trucks crawling	0.0	%
Segment length	0.7	mi	Truck crawl speed	0.0	mi/hr
Terrain type	Level		% Recreational vehicles	20	%
Grade: Length	-	mi	% No-passing zones	20	%
Up/down	-	%	Access point density	1	/mi

Analysis direction volume, Vd 140 veh/h
Opposing direction volume, Vo 80 veh/h

Average Travel Speed

Direction	Analysis(d)		Opposing (o)	
PCE for trucks, ET	1.7		1.9	
PCE for RVs, ER	1.0		1.0	
Heavy-vehicle adj. factor,(note-5) fHV	0.973		0.965	
Grade adj. factor,(note-1) fg	1.00		1.00	
Directional flow rate,(note-2) vi	162	pc/h	93	pc/h

Free-Flow Speed from Field Measurement:		
Field measured speed,(note-3) S FM	-	mi/h
Observed total demand,(note-3) V	-	veh/h
Estimated Free-Flow Speed:		
Base free-flow speed,(note-3) BFFS	60.0	mi/h
Adj. for lane and shoulder width,(note-3) fLS	0.0	mi/h
Adj. for access point density,(note-3) fA	0.3	mi/h
Free-flow speed, FFSd	59.8	mi/h
Adjustment for no-passing zones, fnp	0.7	mi/h
Average travel speed, ATSd	57.1	mi/h
Percent Free Flow Speed, PFFS	95.5	%

Percent Time-Spent-Following

Direction	Analysis(d)		Opposing (o)	
PCE for trucks, ET	1.1		1.1	
PCE for RVs, ER	1.0		1.0	
Heavy-vehicle adjustment factor, fHV	0.996		0.996	
Grade adjustment factor,(note-1) fg	1.00		1.00	
Directional flow rate,(note-2) vi	158	pc/h	90	pc/h
Base percent time-spent-following,(note-4) BPTSFd	17.5	%		
Adjustment for no-passing zones, fnp	30.7			
Percent time-spent-following, PTSFd	37.1	%		

Level of Service and Other Performance Measures

Level of service, LOS	B	
Volume to capacity ratio, v/c	0.06	
Peak 15-min vehicle-miles of travel, VMT15	28	veh-mi
Peak-hour vehicle-miles of travel, VMT60	98	veh-mi
Peak 15-min total travel time, TT15	0.5	veh-h
Capacity from ATS, CdATS	1641	veh/h
Capacity from PTSF, CdPTSF	1693	veh/h
Directional Capacity	4222	veh/h

Passing Lane Analysis

Total length of analysis segment, Lt	0.7	mi
Length of two-lane highway upstream of the passing lane, Lu	-	mi
Length of passing lane including tapers, Lpl	-	mi
Average travel speed, ATSd (from above)	57.1	mi/h
Percent time-spent-following, PTSFd (from above)	37.1	
Level of service, LOSd (from above)	B	

Average Travel Speed with Passing Lane

Downstream length of two-lane highway within effective length of passing lane for average travel speed, Lde	-	mi
Length of two-lane highway downstream of effective length of the passing lane for average travel speed, Ld	-	mi
Adj. factor for the effect of passing lane on average speed, fpl	-	
Average travel speed including passing lane, ATSpl	-	

Percent Time-Spent-Following with Passing Lane

Downstream length of two-lane highway within effective length of passing lane for percent time-spent-following, Lde	-	mi
Length of two-lane highway downstream of effective length of the passing lane for percent time-spent-following, Ld	-	mi
Adj. factor for the effect of passing lane on percent time-spent-following, fpl	-	
Percent time-spent-following including passing lane, PTSFpl	-	%

Level of Service and Other Performance Measures with Passing Lane

Level of service including passing lane, LOSpl	-	
Peak 15-min total travel time, TT15	-	veh-h

Bicycle Level of Service

Posted speed limit, Sp	55
Percent of segment with occupied on-highway parking	0
Pavement rating, P	3
Flow rate in outside lane, vOL	157.3
Effective width of outside lane, We	38.60
Effective speed factor, St	4.79
Bicycle LOS Score, BLOS	-2.13
Bicycle LOS	A

Notes:

1. Note that the adjustment factor for level terrain is 1.00, as level terrain is one of the base conditions. For the purpose of grade adjustment, specific dewngrade segments are treated as level terrain.
2. If vi (vd or vo) >= 1,700 pc/h, terminate analysis-the LOS is F.
3. For the analysis direction only and for v>200 veh/h.
4. For the analysis direction only.
5. Use alternative Exhibit 15-14 if some trucks operate at crawl speeds on a specific downgrade.

Phone: Fax:
E-Mail:

Directional Two-Lane Highway Segment Analysis

Analyst	ACS
Agency/Co.	Fehr and Peers
Date Performed	8/21/2014
Analysis Time Period	PM Peak Hour
Highway	SR-138
From/To	30th St to Route 14
Jurisdiction	CALTRANS
Analysis Year	2040 NB
Description	STATE ROUTE 138 HCS ANALYSIS

Input Data

Highway class	Class 1		Peak hour factor, PHF	0.94	
Shoulder width	10.0	ft	% Trucks and buses	4	%
Lane width	12.0	ft	% Trucks crawling	0.0	%
Segment length	0.7	mi	Truck crawl speed	0.0	mi/hr
Terrain type	Level		% Recreational vehicles	20	%
Grade: Length	-	mi	% No-passing zones	20	%
Up/down	-	%	Access point density	1	/mi

Analysis direction volume, Vd 300 veh/h
Opposing direction volume, Vo 80 veh/h

Average Travel Speed

Direction	Analysis(d)		Opposing (o)	
PCE for trucks, ET	1.4		1.9	
PCE for RVs, ER	1.0		1.0	
Heavy-vehicle adj. factor,(note-5) fHV	0.984		0.965	
Grade adj. factor,(note-1) fg	1.00		1.00	
Directional flow rate,(note-2) vi	324	pc/h	88	pc/h

Free-Flow Speed from Field Measurement:		
Field measured speed,(note-3) S FM	-	mi/h
Observed total demand,(note-3) V	-	veh/h
Estimated Free-Flow Speed:		
Base free-flow speed,(note-3) BFFS	60.0	mi/h
Adj. for lane and shoulder width,(note-3) fLS	0.0	mi/h
Adj. for access point density,(note-3) fA	0.3	mi/h
Free-flow speed, FFSd	59.8	mi/h
Adjustment for no-passing zones, fnp	0.7	mi/h
Average travel speed, ATSd	55.9	mi/h
Percent Free Flow Speed, PFFS	93.5	%

Percent Time-Spent-Following

Direction	Analysis(d)		Opposing (o)	
PCE for trucks, ET	1.1		1.1	
PCE for RVs, ER	1.0		1.0	
Heavy-vehicle adjustment factor, fHV	0.996		0.996	
Grade adjustment factor,(note-1) fg	1.00		1.00	
Directional flow rate,(note-2) vi	320	pc/h	85	pc/h

Base percent time-spent-following,(note-4) BPTSFd	31.8	%
Adjustment for no-passing zones, fnp	26.5	
Percent time-spent-following, PTSFd	52.7	%

Level of Service and Other Performance Measures

Level of service, LOS	C	
Volume to capacity ratio, v/c	0.11	
Peak 15-min vehicle-miles of travel, VMT15	56	veh-mi
Peak-hour vehicle-miles of travel, VMT60	210	veh-mi
Peak 15-min total travel time, TT15	1.0	veh-h
Capacity from ATS, CdATS	1641	veh/h
Capacity from PTSF, CdPTSF	1693	veh/h
Directional Capacity	3726	veh/h

Passing Lane Analysis

Total length of analysis segment, Lt	0.7	mi
Length of two-lane highway upstream of the passing lane, Lu	-	mi
Length of passing lane including tapers, Lpl	-	mi
Average travel speed, ATSd (from above)	55.9	mi/h
Percent time-spent-following, PTSFd (from above)	52.7	
Level of service, LOSd (from above)	C	

Average Travel Speed with Passing Lane

Downstream length of two-lane highway within effective length of passing lane for average travel speed, Lde	-	mi
Length of two-lane highway downstream of effective length of the passing lane for average travel speed, Ld	-	mi
Adj. factor for the effect of passing lane on average speed, fpl	-	
Average travel speed including passing lane, ATSpl	-	

Percent Time-Spent-Following with Passing Lane

Downstream length of two-lane highway within effective length of passing lane for percent time-spent-following, Lde	-	mi
Length of two-lane highway downstream of effective length of the passing lane for percent time-spent-following, Ld	-	mi
Adj. factor for the effect of passing lane on percent time-spent-following, fpl	-	
Percent time-spent-following including passing lane, PTSFpl	-	%

Level of Service and Other Performance Measures with Passing Lane

Level of service including passing lane, LOSpl	-	
Peak 15-min total travel time, TT15	-	veh-h

Bicycle Level of Service

Posted speed limit, Sp	55
Percent of segment with occupied on-highway parking	0
Pavement rating, P	3
Flow rate in outside lane, vOL	319.1
Effective width of outside lane, We	32.00
Effective speed factor, St	4.79
Bicycle LOS Score, BLOS	0.56
Bicycle LOS	A

Notes:

1. Note that the adjustment factor for level terrain is 1.00, as level terrain is one of the base conditions. For the purpose of grade adjustment, specific dewngrade segments are treated as level terrain.
2. If vi (vd or vo) >= 1,700 pc/h, terminate analysis-the LOS is F.
3. For the analysis direction only and for v>200 veh/h.
4. For the analysis direction only.
5. Use alternative Exhibit 15-14 if some trucks operate at crawl speeds on a specific downgrade.

Phone: Fax:
E-mail:

Operational Analysis

Analyst:	ACS
Agency or Company:	Fehr and Peers
Date Performed:	8/21/2014
Analysis Time Period:	AM Peak Hour
Freeway/Direction:	STATE ROUTE 138-EB
From/To:	I-5 Connector to 1-Gorman Post
Jurisdiction:	CAltrans
Analysis Year:	2040 Alt 1
Description:	STATE ROUTE 138 HCS ANALYSIS

Flow Inputs and Adjustments

Volume, V	1810	veh/h
Peak-hour factor, PHF	0.87	
Peak 15-min volume, v15	520	v
Trucks and buses	5	%
Recreational vehicles	0	%
Terrain type:	Level	
Grade	-	%
Segment length	-	mi
Trucks and buses PCE, ET	1.5*	
Recreational vehicle PCE, ER	1.2	
Heavy vehicle adjustment, fHV	0.976	
Driver population factor, fp	1.00	
Flow rate, vp	711	pc/h/ln

Speed Inputs and Adjustments

Lane width	-	ft
Right-side lateral clearance	-	ft
Total ramp density, TRD	-	ramps/mi
Number of lanes, N	3	
Free-flow speed:	Measured	
FFS or BFFS	70.0	mi/h
Lane width adjustment, fLW	-	mi/h
Lateral clearance adjustment, fLC	-	mi/h
TRD adjustment	-	mi/h
Free-flow speed, FFS	70.0	mi/h

LOS and Performance Measures

Flow rate, vp	711	pc/h/ln
Free-flow speed, FFS	70.0	mi/h
Average passenger-car speed, S	70.0	mi/h
Number of lanes, N	3	
Density, D	10.2	pc/mi/ln
Level of service, LOS	A	

Overall results are not computed when free-flow speed is less than 55 mph.

Phone: Fax:
E-mail:

Operational Analysis

Analyst:	ACS
Agency or Company:	Fehr and Peers
Date Performed:	8/21/2014
Analysis Time Period:	PM Peak Hour
Freeway/Direction:	STATE ROUTE 138-EB
From/To:	I-5 Connector to 1-Gorman Post
Jurisdiction:	CAltrans
Analysis Year:	2040 Alt 1
Description:	STATE ROUTE 138 HCS ANALYSIS

Flow Inputs and Adjustments

Volume, V	3140	veh/h
Peak-hour factor, PHF	0.86	
Peak 15-min volume, v15	913	v
Trucks and buses	5	%
Recreational vehicles	0	%
Terrain type:	Level	
Grade	-	%
Segment length	-	mi
Trucks and buses PCE, ET	1.5*	
Recreational vehicle PCE, ER	1.2	
Heavy vehicle adjustment, fHV	0.976	
Driver population factor, fp	1.00	
Flow rate, vp	1247	pc/h/ln

Speed Inputs and Adjustments

Lane width	-	ft
Right-side lateral clearance	-	ft
Total ramp density, TRD	-	ramps/mi
Number of lanes, N	3	
Free-flow speed:	Measured	
FFS or BFFS	70.0	mi/h
Lane width adjustment, fLW	-	mi/h
Lateral clearance adjustment, fLC	-	mi/h
TRD adjustment	-	mi/h
Free-flow speed, FFS	70.0	mi/h

LOS and Performance Measures

Flow rate, vp	1247	pc/h/ln
Free-flow speed, FFS	70.0	mi/h
Average passenger-car speed, S	70.0	mi/h
Number of lanes, N	3	
Density, D	17.8	pc/mi/ln
Level of service, LOS	B	

Overall results are not computed when free-flow speed is less than 55 mph.

Phone: Fax:
E-mail:

Operational Analysis

Analyst:	ACS
Agency or Company:	Fehr and Peers
Date Performed:	8/21/2014
Analysis Time Period:	AM Peak Hour
Freeway/Direction:	STATE ROUTE 138-WB
From/To:	I-5 Connector to 1-Gorman Post
Jurisdiction:	CAltrans
Analysis Year:	2040 Alt 1
Description:	STATE ROUTE 138 HCS ANALYSIS

Flow Inputs and Adjustments

Volume, V	3240	veh/h
Peak-hour factor, PHF	0.87	
Peak 15-min volume, v15	931	v
Trucks and buses	5	%
Recreational vehicles	0	%
Terrain type:	Level	
Grade	-	%
Segment length	-	mi
Trucks and buses PCE, ET	1.5*	
Recreational vehicle PCE, ER	1.2	
Heavy vehicle adjustment, fHV	0.976	
Driver population factor, fp	1.00	
Flow rate, vp	1272	pc/h/ln

Speed Inputs and Adjustments

Lane width	-	ft
Right-side lateral clearance	-	ft
Total ramp density, TRD	-	ramps/mi
Number of lanes, N	3	
Free-flow speed:	Measured	
FFS or BFFS	70.0	mi/h
Lane width adjustment, fLW	-	mi/h
Lateral clearance adjustment, fLC	-	mi/h
TRD adjustment	-	mi/h
Free-flow speed, FFS	70.0	mi/h

LOS and Performance Measures

Flow rate, vp	1272	pc/h/ln
Free-flow speed, FFS	70.0	mi/h
Average passenger-car speed, S	69.9	mi/h
Number of lanes, N	3	
Density, D	18.2	pc/mi/ln
Level of service, LOS	C	

Overall results are not computed when free-flow speed is less than 55 mph.

Phone: Fax:
E-mail:

Operational Analysis

Analyst:	ACS
Agency or Company:	Fehr and Peers
Date Performed:	8/21/2014
Analysis Time Period:	PM Peak Hour
Freeway/Direction:	STATE ROUTE 138-WB
From/To:	I-5 Connector to 1-Gorman Post
Jurisdiction:	CAltrans
Analysis Year:	2040 Alt 1
Description:	STATE ROUTE 138 HCS ANALYSIS

Flow Inputs and Adjustments

Volume, V	2310	veh/h
Peak-hour factor, PHF	0.86	
Peak 15-min volume, v15	672	v
Trucks and buses	5	%
Recreational vehicles	0	%
Terrain type:	Level	
Grade	-	%
Segment length	-	mi
Trucks and buses PCE, ET	1.5*	
Recreational vehicle PCE, ER	1.2	
Heavy vehicle adjustment, fHV	0.976	
Driver population factor, fp	1.00	
Flow rate, vp	918	pc/h/ln

Speed Inputs and Adjustments

Lane width	-	ft
Right-side lateral clearance	-	ft
Total ramp density, TRD	-	ramps/mi
Number of lanes, N	3	
Free-flow speed:	Measured	
FFS or BFFS	70.0	mi/h
Lane width adjustment, fLW	-	mi/h
Lateral clearance adjustment, fLC	-	mi/h
TRD adjustment	-	mi/h
Free-flow speed, FFS	70.0	mi/h

LOS and Performance Measures

Flow rate, vp	918	pc/h/ln
Free-flow speed, FFS	70.0	mi/h
Average passenger-car speed, S	70.0	mi/h
Number of lanes, N	3	
Density, D	13.1	pc/mi/ln
Level of service, LOS	B	

Overall results are not computed when free-flow speed is less than 55 mph.

Phone: Fax:
E-mail:

Operational Analysis

Analyst:	ACS
Agency or Company:	Fehr and Peers
Date Performed:	8/21/2014
Analysis Time Period:	AM Peak Hour
Freeway/Direction:	STATE ROUTE 138-EB
From/To:	Gorman Post to Private Rd
Jurisdiction:	CAltrans
Analysis Year:	2040 Alt 1
Description:	STATE ROUTE 138 HCS ANALYSIS

Flow Inputs and Adjustments

Volume, V	1830	veh/h
Peak-hour factor, PHF	0.79	
Peak 15-min volume, v15	579	v
Trucks and buses	5	%
Recreational vehicles	0	%
Terrain type:	Level	
Grade	-	%
Segment length	-	mi
Trucks and buses PCE, ET	1.5*	
Recreational vehicle PCE, ER	1.2	
Heavy vehicle adjustment, fHV	0.976	
Driver population factor, fp	1.00	
Flow rate, vp	791	pc/h/ln

Speed Inputs and Adjustments

Lane width	-	ft
Right-side lateral clearance	-	ft
Total ramp density, TRD	-	ramps/mi
Number of lanes, N	3	
Free-flow speed:	Measured	
FFS or BFFS	70.0	mi/h
Lane width adjustment, fLW	-	mi/h
Lateral clearance adjustment, fLC	-	mi/h
TRD adjustment	-	mi/h
Free-flow speed, FFS	70.0	mi/h

LOS and Performance Measures

Flow rate, vp	791	pc/h/ln
Free-flow speed, FFS	70.0	mi/h
Average passenger-car speed, S	70.0	mi/h
Number of lanes, N	3	
Density, D	11.3	pc/mi/ln
Level of service, LOS	B	

Overall results are not computed when free-flow speed is less than 55 mph.

Phone: Fax:
E-mail:

Operational Analysis

Analyst:	ACS
Agency or Company:	Fehr and Peers
Date Performed:	8/21/2014
Analysis Time Period:	PM Peak Hour
Freeway/Direction:	STATE ROUTE 138-EB
From/To:	Gorman Post to Private Rd
Jurisdiction:	CAltrans
Analysis Year:	2040 Alt 1
Description:	STATE ROUTE 138 HCS ANALYSIS

Flow Inputs and Adjustments

Volume, V	2770	veh/h
Peak-hour factor, PHF	0.90	
Peak 15-min volume, v15	769	v
Trucks and buses	5	%
Recreational vehicles	0	%
Terrain type:	Level	
Grade	-	%
Segment length	-	mi
Trucks and buses PCE, ET	1.5*	
Recreational vehicle PCE, ER	1.2	
Heavy vehicle adjustment, fHV	0.976	
Driver population factor, fp	1.00	
Flow rate, vp	1052	pc/h/ln

Speed Inputs and Adjustments

Lane width	-	ft
Right-side lateral clearance	-	ft
Total ramp density, TRD	-	ramps/mi
Number of lanes, N	3	
Free-flow speed:	Measured	
FFS or BFFS	70.0	mi/h
Lane width adjustment, fLW	-	mi/h
Lateral clearance adjustment, fLC	-	mi/h
TRD adjustment	-	mi/h
Free-flow speed, FFS	70.0	mi/h

LOS and Performance Measures

Flow rate, vp	1052	pc/h/ln
Free-flow speed, FFS	70.0	mi/h
Average passenger-car speed, S	70.0	mi/h
Number of lanes, N	3	
Density, D	15.0	pc/mi/ln
Level of service, LOS	B	

Overall results are not computed when free-flow speed is less than 55 mph.

Phone: Fax:
E-mail:

Operational Analysis

Analyst:	ACS
Agency or Company:	Fehr and Peers
Date Performed:	8/21/2014
Analysis Time Period:	AM Peak Hour
Freeway/Direction:	STATE ROUTE 138-WB
From/To:	Gorman Post to Private Rd
Jurisdiction:	CAltrans
Analysis Year:	2040 Alt 1
Description:	STATE ROUTE 138 HCS ANALYSIS

Flow Inputs and Adjustments

Volume, V	2860	veh/h
Peak-hour factor, PHF	0.79	
Peak 15-min volume, v15	905	v
Trucks and buses	5	%
Recreational vehicles	0	%
Terrain type:	Level	
Grade	-	%
Segment length	-	mi
Trucks and buses PCE, ET	1.5*	
Recreational vehicle PCE, ER	1.2	
Heavy vehicle adjustment, fHV	0.976	
Driver population factor, fp	1.00	
Flow rate, vp	1237	pc/h/ln

Speed Inputs and Adjustments

Lane width	-	ft
Right-side lateral clearance	-	ft
Total ramp density, TRD	-	ramps/mi
Number of lanes, N	3	
Free-flow speed:	Measured	
FFS or BFFS	70.0	mi/h
Lane width adjustment, fLW	-	mi/h
Lateral clearance adjustment, fLC	-	mi/h
TRD adjustment	-	mi/h
Free-flow speed, FFS	70.0	mi/h

LOS and Performance Measures

Flow rate, vp	1237	pc/h/ln
Free-flow speed, FFS	70.0	mi/h
Average passenger-car speed, S	70.0	mi/h
Number of lanes, N	3	
Density, D	17.7	pc/mi/ln
Level of service, LOS	B	

Overall results are not computed when free-flow speed is less than 55 mph.

Phone: Fax:
E-mail:

Operational Analysis

Analyst:	ACS
Agency or Company:	Fehr and Peers
Date Performed:	8/21/2014
Analysis Time Period:	PM Peak Hour
Freeway/Direction:	STATE ROUTE 138-WB
From/To:	Gorman Post to Private Rd
Jurisdiction:	CAltrans
Analysis Year:	2040 Alt 1
Description:	STATE ROUTE 138 HCS ANALYSIS

Flow Inputs and Adjustments

Volume, V	2320	veh/h
Peak-hour factor, PHF	0.90	
Peak 15-min volume, v15	644	v
Trucks and buses	5	%
Recreational vehicles	0	%
Terrain type:	Level	
Grade	-	%
Segment length	-	mi
Trucks and buses PCE, ET	1.5*	
Recreational vehicle PCE, ER	1.2	
Heavy vehicle adjustment, fHV	0.976	
Driver population factor, fp	1.00	
Flow rate, vp	881	pc/h/ln

Speed Inputs and Adjustments

Lane width	-	ft
Right-side lateral clearance	-	ft
Total ramp density, TRD	-	ramps/mi
Number of lanes, N	3	
Free-flow speed:	Measured	
FFS or BFFS	70.0	mi/h
Lane width adjustment, fLW	-	mi/h
Lateral clearance adjustment, fLC	-	mi/h
TRD adjustment	-	mi/h
Free-flow speed, FFS	70.0	mi/h

LOS and Performance Measures

Flow rate, vp	881	pc/h/ln
Free-flow speed, FFS	70.0	mi/h
Average passenger-car speed, S	70.0	mi/h
Number of lanes, N	3	
Density, D	12.6	pc/mi/ln
Level of service, LOS	B	

Overall results are not computed when free-flow speed is less than 55 mph.

Phone: Fax:
E-mail:

Operational Analysis

Analyst:	ACS
Agency or Company:	Fehr and Peers
Date Performed:	8/21/2014
Analysis Time Period:	AM Peak Hour
Freeway/Direction:	STATE ROUTE 138-EB
From/To:	Private Rd to 300th St
Jurisdiction:	CAltrans
Analysis Year:	2040 Alt 1
Description:	STATE ROUTE 138 HCS ANALYSIS

Flow Inputs and Adjustments

Volume, V	1970	veh/h
Peak-hour factor, PHF	0.72	
Peak 15-min volume, v15	684	v
Trucks and buses	5	%
Recreational vehicles	0	%
Terrain type:	Level	
Grade	-	%
Segment length	-	mi
Trucks and buses PCE, ET	1.5*	
Recreational vehicle PCE, ER	1.2	
Heavy vehicle adjustment, fHV	0.976	
Driver population factor, fp	1.00	
Flow rate, vp	935	pc/h/ln

Speed Inputs and Adjustments

Lane width	-	ft
Right-side lateral clearance	-	ft
Total ramp density, TRD	-	ramps/mi
Number of lanes, N	3	
Free-flow speed:	Measured	
FFS or BFFS	70.0	mi/h
Lane width adjustment, fLW	-	mi/h
Lateral clearance adjustment, fLC	-	mi/h
TRD adjustment	-	mi/h
Free-flow speed, FFS	70.0	mi/h

LOS and Performance Measures

Flow rate, vp	935	pc/h/ln
Free-flow speed, FFS	70.0	mi/h
Average passenger-car speed, S	70.0	mi/h
Number of lanes, N	3	
Density, D	13.4	pc/mi/ln
Level of service, LOS	B	

Overall results are not computed when free-flow speed is less than 55 mph.

Phone: Fax:
E-mail:

Operational Analysis

Analyst:	ACS
Agency or Company:	Fehr and Peers
Date Performed:	8/21/2014
Analysis Time Period:	PM Peak Hour
Freeway/Direction:	STATE ROUTE 138-EB
From/To:	Private Rd to 300th St
Jurisdiction:	CAltrans
Analysis Year:	2040 Alt 1
Description:	STATE ROUTE 138 HCS ANALYSIS

Flow Inputs and Adjustments

Volume, V	2620	veh/h
Peak-hour factor, PHF	0.77	
Peak 15-min volume, v15	851	v
Trucks and buses	5	%
Recreational vehicles	0	%
Terrain type:	Level	
Grade	-	%
Segment length	-	mi
Trucks and buses PCE, ET	1.5*	
Recreational vehicle PCE, ER	1.2	
Heavy vehicle adjustment, fHV	0.976	
Driver population factor, fp	1.00	
Flow rate, vp	1163	pc/h/ln

Speed Inputs and Adjustments

Lane width	-	ft
Right-side lateral clearance	-	ft
Total ramp density, TRD	-	ramps/mi
Number of lanes, N	3	
Free-flow speed:	Measured	
FFS or BFFS	70.0	mi/h
Lane width adjustment, fLW	-	mi/h
Lateral clearance adjustment, fLC	-	mi/h
TRD adjustment	-	mi/h
Free-flow speed, FFS	70.0	mi/h

LOS and Performance Measures

Flow rate, vp	1163	pc/h/ln
Free-flow speed, FFS	70.0	mi/h
Average passenger-car speed, S	70.0	mi/h
Number of lanes, N	3	
Density, D	16.6	pc/mi/ln
Level of service, LOS	B	

Overall results are not computed when free-flow speed is less than 55 mph.

Phone: Fax:
E-mail:

Operational Analysis

Analyst:	ACS
Agency or Company:	Fehr and Peers
Date Performed:	8/21/2014
Analysis Time Period:	AM Peak Hour
Freeway/Direction:	STATE ROUTE 138-WB
From/To:	Private Rd to 300th St
Jurisdiction:	CAltrans
Analysis Year:	2040 Alt 1
Description:	STATE ROUTE 138 HCS ANALYSIS

Flow Inputs and Adjustments

Volume, V	2790	veh/h
Peak-hour factor, PHF	0.72	
Peak 15-min volume, v15	969	v
Trucks and buses	5	%
Recreational vehicles	0	%
Terrain type:	Level	
Grade	-	%
Segment length	-	mi
Trucks and buses PCE, ET	1.5*	
Recreational vehicle PCE, ER	1.2	
Heavy vehicle adjustment, fHV	0.976	
Driver population factor, fp	1.00	
Flow rate, vp	1324	pc/h/ln

Speed Inputs and Adjustments

Lane width	-	ft
Right-side lateral clearance	-	ft
Total ramp density, TRD	-	ramps/mi
Number of lanes, N	3	
Free-flow speed:	Measured	
FFS or BFFS	70.0	mi/h
Lane width adjustment, fLW	-	mi/h
Lateral clearance adjustment, fLC	-	mi/h
TRD adjustment	-	mi/h
Free-flow speed, FFS	70.0	mi/h

LOS and Performance Measures

Flow rate, vp	1324	pc/h/ln
Free-flow speed, FFS	70.0	mi/h
Average passenger-car speed, S	69.8	mi/h
Number of lanes, N	3	
Density, D	19.0	pc/mi/ln
Level of service, LOS	C	

Overall results are not computed when free-flow speed is less than 55 mph.

Phone: Fax:
E-mail:

Operational Analysis

Analyst:	ACS
Agency or Company:	Fehr and Peers
Date Performed:	8/21/2014
Analysis Time Period:	PM Peak Hour
Freeway/Direction:	STATE ROUTE 138-WB
From/To:	Private Rd to 300th St
Jurisdiction:	CAltrans
Analysis Year:	2040 Alt 1
Description:	STATE ROUTE 138 HCS ANALYSIS

Flow Inputs and Adjustments

Volume, V	2540	veh/h
Peak-hour factor, PHF	0.77	
Peak 15-min volume, v15	825	v
Trucks and buses	5	%
Recreational vehicles	0	%
Terrain type:	Level	
Grade	-	%
Segment length	-	mi
Trucks and buses PCE, ET	1.5*	
Recreational vehicle PCE, ER	1.2	
Heavy vehicle adjustment, fHV	0.976	
Driver population factor, fp	1.00	
Flow rate, vp	1127	pc/h/ln

Speed Inputs and Adjustments

Lane width	-	ft
Right-side lateral clearance	-	ft
Total ramp density, TRD	-	ramps/mi
Number of lanes, N	3	
Free-flow speed:	Measured	
FFS or BFFS	70.0	mi/h
Lane width adjustment, fLW	-	mi/h
Lateral clearance adjustment, fLC	-	mi/h
TRD adjustment	-	mi/h
Free-flow speed, FFS	70.0	mi/h

LOS and Performance Measures

Flow rate, vp	1127	pc/h/ln
Free-flow speed, FFS	70.0	mi/h
Average passenger-car speed, S	70.0	mi/h
Number of lanes, N	3	
Density, D	16.1	pc/mi/ln
Level of service, LOS	B	

Overall results are not computed when free-flow speed is less than 55 mph.

Phone: Fax:
E-mail:

OPERATIONAL ANALYSIS

Analyst:	ACS
Agency/Co:	Fehr and Peers
Date:	8/21/2014
Analysis Period:	AM Peak Hour
Highway:	STATE ROUTE 138
From/To:	280th St to 270th St
Jurisdiction:	CALTRANS
Analysis Year:	2040 Alt 1
Project ID:	STATE ROUTE 138 HCS ANALYSIS

FREE-FLOW SPEED

Direction	1		2	
Lane width	12.0	ft	12.0	ft
Lateral clearance:				
Right edge	6.0	ft	6.0	ft
Left edge	6.0	ft	6.0	ft
Total lateral clearance	12.0	ft	12.0	ft
Access points per mile	1		1	
Median type	Divided		Divided	
Free-flow speed:	Base		Base	
FFS or BFFS	60.0	mph	60.0	mph
Lane width adjustment, FLW	0.0	mph	0.0	mph
Lateral clearance adjustment, FLC	0.0	mph	0.0	mph
Median type adjustment, FM	0.0	mph	0.0	mph
Access points adjustment, FA	0.3	mph	0.3	mph
Free-flow speed	59.8	mph	59.8	mph

VOLUME

Direction	1		2	
Volume, V	1740	vph	2130	vph
Peak-hour factor, PHF	0.97		0.97	
Peak 15-minute volume, v15	448		549	
Trucks and buses	5	%	5	%
Recreational vehicles	0	%	0	%
Terrain type	Level		Level	
Grade	0.00	%	0.00	%
Segment length	0.00	mi	0.00	mi
Number of lanes	2		2	
Driver population adjustment, fP	1.00		1.00	
Trucks and buses PCE, ET	1.5		1.5	
Recreational vehicles PCE, ER	1.2		1.2	
Heavy vehicle adjustment, fHV	0.976		0.976	
Flow rate, vp	919	pcphpl	1125	pcphpl

RESULTS

Direction	1		2	
Flow rate, vp	919	pcphpl	1125	pcphpl
Free-flow speed, FFS	59.8	mph	59.8	mph
Avg. passenger-car travel speed, S	60.0	mph	60.0	mph
Level of service, LOS	B		C	
Density, D	15.3	pc/mi/ln	18.8	pc/mi/ln

Bicycle Level of Service

Posted speed limit, Sp		55
Percent of segment with occupied on-highway parking	0	0
Pavement rating, P	3	3
Flow rate in outside lane, vOL	896.9	1097.9
Effective width of outside lane, We	24.00	24.00
Effective speed factor, St	4.79	4.79
Bicycle LOS Score, BLOS	3.62	3.72
Bicycle LOS	D	D

Overall results are not computed when free-flow speed is less than 45 mph.

Phone: Fax:
E-mail:

OPERATIONAL ANALYSIS

Analyst:	ACS
Agency/Co:	Fehr and Peers
Date:	8/21/2014
Analysis Period:	PM Peak Hour
Highway:	STATE ROUTE 138
From/To:	280th St to 270th St
Jurisdiction:	CALTRANS
Analysis Year:	2040 Alt 1
Project ID:	STATE ROUTE 138 HCS ANALYSIS

FREE-FLOW SPEED

Direction	1		2	
Lane width	12.0	ft	12.0	ft
Lateral clearance:				
Right edge	6.0	ft	6.0	ft
Left edge	6.0	ft	6.0	ft
Total lateral clearance	12.0	ft	12.0	ft
Access points per mile	1		1	
Median type	Divided		Divided	
Free-flow speed:	Base		Base	
FFS or BFFS	60.0	mph	60.0	mph
Lane width adjustment, FLW	0.0	mph	0.0	mph
Lateral clearance adjustment, FLC	0.0	mph	0.0	mph
Median type adjustment, FM	0.0	mph	0.0	mph
Access points adjustment, FA	0.3	mph	0.3	mph
Free-flow speed	59.8	mph	59.8	mph

VOLUME

Direction	1		2	
Volume, V	1680	vph	2290	vph
Peak-hour factor, PHF	0.90		0.90	
Peak 15-minute volume, v15	467		636	
Trucks and buses	5	%	5	%
Recreational vehicles	0	%	0	%
Terrain type	Level		Level	
Grade	0.00	%	0.00	%
Segment length	0.00	mi	0.00	mi
Number of lanes	2		2	
Driver population adjustment, fP	1.00		1.00	
Trucks and buses PCE, ET	1.5		1.5	
Recreational vehicles PCE, ER	1.2		1.2	
Heavy vehicle adjustment, fHV	0.976		0.976	
Flow rate, vp	956	pcphpl	1304	pcphpl

RESULTS

Direction	1		2	
Flow rate, vp	956	pcphpl	1304	pcphpl
Free-flow speed, FFS	59.8	mph	59.8	mph
Avg. passenger-car travel speed, S	60.0	mph	60.0	mph
Level of service, LOS	B		C	
Density, D	15.9	pc/mi/ln	21.7	pc/mi/ln

Bicycle Level of Service

Posted speed limit, Sp		55
Percent of segment with occupied on-highway parking	0	0
Pavement rating, P	3	3
Flow rate in outside lane, vOL	933.3	1272.2
Effective width of outside lane, We	24.00	24.00
Effective speed factor, St	4.79	4.79
Bicycle LOS Score, BLOS	3.64	3.80
Bicycle LOS	D	D

Overall results are not computed when free-flow speed is less than 45 mph.

Phone: Fax:
E-mail:

OPERATIONAL ANALYSIS

Analyst:	ACS
Agency/Co:	Fehr and Peers
Date:	8/21/2014
Analysis Period:	AM Peak Hour
Highway:	STATE ROUTE 138
From/To:	Three Points Rd to 245th St
Jurisdiction:	CALTRANS
Analysis Year:	2040 Alt 1
Project ID:	STATE ROUTE 138 HCS ANALYSIS

FREE-FLOW SPEED

Direction	1		2	
Lane width	12.0	ft	12.0	ft
Lateral clearance:				
Right edge	6.0	ft	6.0	ft
Left edge	6.0	ft	6.0	ft
Total lateral clearance	12.0	ft	12.0	ft
Access points per mile	1		1	
Median type	Divided		Divided	
Free-flow speed:	Base		Base	
FFS or BFFS	60.0	mph	60.0	mph
Lane width adjustment, FLW	0.0	mph	0.0	mph
Lateral clearance adjustment, FLC	0.0	mph	0.0	mph
Median type adjustment, FM	0.0	mph	0.0	mph
Access points adjustment, FA	0.3	mph	0.3	mph
Free-flow speed	59.8	mph	59.8	mph

VOLUME

Direction	1		2	
Volume, V	1740	vph	2130	vph
Peak-hour factor, PHF	0.79		0.79	
Peak 15-minute volume, v15	551		674	
Trucks and buses	5	%	5	%
Recreational vehicles	0	%	0	%
Terrain type	Level		Level	
Grade	0.00	%	0.00	%
Segment length	0.00	mi	0.00	mi
Number of lanes	2		2	
Driver population adjustment, fP	1.00		1.00	
Trucks and buses PCE, ET	1.5		1.5	
Recreational vehicles PCE, ER	1.2		1.2	
Heavy vehicle adjustment, fHV	0.976		0.976	
Flow rate, vp	1128	pcphpl	1381	pcphpl

RESULTS

Direction	1		2	
Flow rate, vp	1128	pcphpl	1381	pcphpl
Free-flow speed, FFS	59.8	mph	59.8	mph
Avg. passenger-car travel speed, S	60.0	mph	60.0	mph
Level of service, LOS	C		C	
Density, D	18.8	pc/mi/ln	23.0	pc/mi/ln

Bicycle Level of Service

Posted speed limit, Sp		55
Percent of segment with occupied on-highway parking	0	0
Pavement rating, P	3	3
Flow rate in outside lane, vOL	1101.3	1348.1
Effective width of outside lane, We	24.00	24.00
Effective speed factor, St	4.79	4.79
Bicycle LOS Score, BLOS	3.72	3.83
Bicycle LOS	D	D

Overall results are not computed when free-flow speed is less than 45 mph.

Phone: Fax:
E-mail:

OPERATIONAL ANALYSIS

Analyst:	ACS
Agency/Co:	Fehr and Peers
Date:	8/21/2014
Analysis Period:	PM Peak Hour
Highway:	STATE ROUTE 138
From/To:	Three Points Rd to 245th St
Jurisdiction:	CALTRANS
Analysis Year:	2040 Alt 1
Project ID:	STATE ROUTE 138 HCS ANALYSIS

FREE-FLOW SPEED

Direction	1		2	
Lane width	12.0	ft	12.0	ft
Lateral clearance:				
Right edge	6.0	ft	6.0	ft
Left edge	6.0	ft	6.0	ft
Total lateral clearance	12.0	ft	12.0	ft
Access points per mile	1		1	
Median type	Divided		Divided	
Free-flow speed:	Base		Base	
FFS or BFFS	60.0	mph	60.0	mph
Lane width adjustment, FLW	0.0	mph	0.0	mph
Lateral clearance adjustment, FLC	0.0	mph	0.0	mph
Median type adjustment, FM	0.0	mph	0.0	mph
Access points adjustment, FA	0.3	mph	0.3	mph
Free-flow speed	59.8	mph	59.8	mph

VOLUME

Direction	1		2	
Volume, V	1680	vph	2290	vph
Peak-hour factor, PHF	0.89		0.89	
Peak 15-minute volume, v15	472		643	
Trucks and buses	5	%	5	%
Recreational vehicles	0	%	0	%
Terrain type	Level		Level	
Grade	0.00	%	0.00	%
Segment length	0.00	mi	0.00	mi
Number of lanes	2		2	
Driver population adjustment, fP	1.00		1.00	
Trucks and buses PCE, ET	1.5		1.5	
Recreational vehicles PCE, ER	1.2		1.2	
Heavy vehicle adjustment, fHV	0.976		0.976	
Flow rate, vp	967	pcphpl	1318	pcphpl

RESULTS

Direction	1		2	
Flow rate, vp	967	pcphpl	1318	pcphpl
Free-flow speed, FFS	59.8	mph	59.8	mph
Avg. passenger-car travel speed, S	60.0	mph	60.0	mph
Level of service, LOS	B		C	
Density, D	16.1	pc/mi/ln	22.0	pc/mi/ln

Bicycle Level of Service

Posted speed limit, Sp		55
Percent of segment with occupied on-highway parking	0	0
Pavement rating, P	3	3
Flow rate in outside lane, vOL	943.8	1286.5
Effective width of outside lane, We	24.00	24.00
Effective speed factor, St	4.79	4.79
Bicycle LOS Score, BLOS	3.65	3.80
Bicycle LOS	D	D

Overall results are not computed when free-flow speed is less than 45 mph.

Phone: Fax:
E-mail:

OPERATIONAL ANALYSIS

Analyst:	ACS
Agency/Co:	Fehr and Peers
Date:	8/21/2014
Analysis Period:	AM Peak Hour
Highway:	STATE ROUTE 138
From/To:	230th St to 190th St
Jurisdiction:	CALTRANS
Analysis Year:	2040 Alt 1
Project ID:	STATE ROUTE 138 HCS ANALYSIS

FREE-FLOW SPEED

Direction	1		2	
Lane width	12.0	ft	12.0	ft
Lateral clearance:				
Right edge	6.0	ft	6.0	ft
Left edge	6.0	ft	6.0	ft
Total lateral clearance	12.0	ft	12.0	ft
Access points per mile	1		1	
Median type	Divided		Divided	
Free-flow speed:	Base		Base	
FFS or BFFS	60.0	mph	60.0	mph
Lane width adjustment, FLW	0.0	mph	0.0	mph
Lateral clearance adjustment, FLC	0.0	mph	0.0	mph
Median type adjustment, FM	0.0	mph	0.0	mph
Access points adjustment, FA	0.3	mph	0.3	mph
Free-flow speed	59.8	mph	59.8	mph

VOLUME

Direction	1		2	
Volume, V	1550	vph	1990	vph
Peak-hour factor, PHF	0.82		0.82	
Peak 15-minute volume, v15	473		607	
Trucks and buses	5	%	5	%
Recreational vehicles	0	%	0	%
Terrain type	Level		Level	
Grade	0.00	%	0.00	%
Segment length	0.00	mi	0.00	mi
Number of lanes	2		2	
Driver population adjustment, fP	1.00		1.00	
Trucks and buses PCE, ET	1.5		1.5	
Recreational vehicles PCE, ER	1.2		1.2	
Heavy vehicle adjustment, fHV	0.976		0.976	
Flow rate, vp	968	pcphpl	1243	pcphpl

RESULTS

Direction	1		2	
Flow rate, vp	968	pcphpl	1243	pcphpl
Free-flow speed, FFS	59.8	mph	59.8	mph
Avg. passenger-car travel speed, S	60.0	mph	60.0	mph
Level of service, LOS	B		C	
Density, D	16.1	pc/mi/ln	20.7	pc/mi/ln

Bicycle Level of Service

Posted speed limit, Sp		55
Percent of segment with occupied on-highway parking	0	0
Pavement rating, P	3	3
Flow rate in outside lane, vOL	945.1	1213.4
Effective width of outside lane, We	24.00	24.00
Effective speed factor, St	4.79	4.79
Bicycle LOS Score, BLOS	3.65	3.77
Bicycle LOS	D	D

Overall results are not computed when free-flow speed is less than 45 mph.

Phone: Fax:
E-mail:

OPERATIONAL ANALYSIS

Analyst:	ACS
Agency/Co:	Fehr and Peers
Date:	8/21/2014
Analysis Period:	PM Peak Hour
Highway:	STATE ROUTE 138
From/To:	230th St to 190th St
Jurisdiction:	CALTRANS
Analysis Year:	2040 Alt 1
Project ID:	STATE ROUTE 138 HCS ANALYSIS

FREE-FLOW SPEED

Direction	1		2	
Lane width	12.0	ft	12.0	ft
Lateral clearance:				
Right edge	6.0	ft	6.0	ft
Left edge	6.0	ft	6.0	ft
Total lateral clearance	12.0	ft	12.0	ft
Access points per mile	1		1	
Median type	Divided		Divided	
Free-flow speed:	Base		Base	
FFS or BFFS	60.0	mph	60.0	mph
Lane width adjustment, FLW	0.0	mph	0.0	mph
Lateral clearance adjustment, FLC	0.0	mph	0.0	mph
Median type adjustment, FM	0.0	mph	0.0	mph
Access points adjustment, FA	0.3	mph	0.3	mph
Free-flow speed	59.8	mph	59.8	mph

VOLUME

Direction	1		2	
Volume, V	1710	vph	2200	vph
Peak-hour factor, PHF	0.88		0.88	
Peak 15-minute volume, v15	486		625	
Trucks and buses	5	%	5	%
Recreational vehicles	0	%	0	%
Terrain type	Level		Level	
Grade	0.00	%	0.00	%
Segment length	0.00	mi	0.00	mi
Number of lanes	2		2	
Driver population adjustment, fP	1.00		1.00	
Trucks and buses PCE, ET	1.5		1.5	
Recreational vehicles PCE, ER	1.2		1.2	
Heavy vehicle adjustment, fHV	0.976		0.976	
Flow rate, vp	995	pcphpl	1281	pcphpl

RESULTS

Direction	1		2	
Flow rate, vp	995	pcphpl	1281	pcphpl
Free-flow speed, FFS	59.8	mph	59.8	mph
Avg. passenger-car travel speed, S	60.0	mph	60.0	mph
Level of service, LOS	B		C	
Density, D	16.6	pc/mi/ln	21.4	pc/mi/ln

Bicycle Level of Service

Posted speed limit, Sp		55
Percent of segment with occupied on-highway parking	0	0
Pavement rating, P	3	3
Flow rate in outside lane, vOL	971.6	1250.0
Effective width of outside lane, We	24.00	24.00
Effective speed factor, St	4.79	4.79
Bicycle LOS Score, BLOS	3.66	3.79
Bicycle LOS	D	D

Overall results are not computed when free-flow speed is less than 45 mph.

Phone: Fax:
E-mail:

OPERATIONAL ANALYSIS

Analyst:	ACS
Agency/Co:	Fehr and Peers
Date:	8/21/2014
Analysis Period:	AM Peak Hour
Highway:	STATE ROUTE 138
From/To:	190th St to 130th St
Jurisdiction:	CALTRANS
Analysis Year:	2040 Alt 1
Project ID:	STATE ROUTE 138 HCS ANALYSIS

FREE-FLOW SPEED

Direction	1		2	
Lane width	12.0	ft	12.0	ft
Lateral clearance:				
Right edge	6.0	ft	6.0	ft
Left edge	6.0	ft	6.0	ft
Total lateral clearance	12.0	ft	12.0	ft
Access points per mile	1		1	
Median type	Divided		Divided	
Free-flow speed:	Base		Base	
FFS or BFFS	60.0	mph	60.0	mph
Lane width adjustment, FLW	0.0	mph	0.0	mph
Lateral clearance adjustment, FLC	0.0	mph	0.0	mph
Median type adjustment, FM	0.0	mph	0.0	mph
Access points adjustment, FA	0.3	mph	0.3	mph
Free-flow speed	59.8	mph	59.8	mph

VOLUME

Direction	1		2	
Volume, V	1250	vph	1910	vph
Peak-hour factor, PHF	0.72		0.72	
Peak 15-minute volume, v15	434		663	
Trucks and buses	5	%	5	%
Recreational vehicles	0	%	0	%
Terrain type	Level		Level	
Grade	0.00	%	0.00	%
Segment length	0.00	mi	0.00	mi
Number of lanes	2		2	
Driver population adjustment, fP	1.00		1.00	
Trucks and buses PCE, ET	1.5		1.5	
Recreational vehicles PCE, ER	1.2		1.2	
Heavy vehicle adjustment, fHV	0.976		0.976	
Flow rate, vp	889	pcphpl	1359	pcphpl

RESULTS

Direction	1		2	
Flow rate, vp	889	pcphpl	1359	pcphpl
Free-flow speed, FFS	59.8	mph	59.8	mph
Avg. passenger-car travel speed, S	60.0	mph	60.0	mph
Level of service, LOS	B		C	
Density, D	14.8	pc/mi/ln	22.6	pc/mi/ln

Bicycle Level of Service

Posted speed limit, Sp		55
Percent of segment with occupied on-highway parking	0	0
Pavement rating, P	3	3
Flow rate in outside lane, vOL	868.1	1326.4
Effective width of outside lane, We	24.00	24.00
Effective speed factor, St	4.79	4.79
Bicycle LOS Score, BLOS	3.60	3.82
Bicycle LOS	D	D

Overall results are not computed when free-flow speed is less than 45 mph.

Phone: Fax:
E-mail:

OPERATIONAL ANALYSIS

Analyst:	ACS
Agency/Co:	Fehr and Peers
Date:	8/21/2014
Analysis Period:	PM Peak Hour
Highway:	STATE ROUTE 138
From/To:	190th St to 130th St
Jurisdiction:	CALTRANS
Analysis Year:	2040 Alt 1
Project ID:	STATE ROUTE 138 HCS ANALYSIS

FREE-FLOW SPEED

Direction	1		2	
Lane width	12.0	ft	12.0	ft
Lateral clearance:				
Right edge	6.0	ft	6.0	ft
Left edge	6.0	ft	6.0	ft
Total lateral clearance	12.0	ft	12.0	ft
Access points per mile	1		1	
Median type	Divided		Divided	
Free-flow speed:	Base		Base	
FFS or BFFS	60.0	mph	60.0	mph
Lane width adjustment, FLW	0.0	mph	0.0	mph
Lateral clearance adjustment, FLC	0.0	mph	0.0	mph
Median type adjustment, FM	0.0	mph	0.0	mph
Access points adjustment, FA	0.3	mph	0.3	mph
Free-flow speed	59.8	mph	59.8	mph

VOLUME

Direction	1		2	
Volume, V	1430	vph	2110	vph
Peak-hour factor, PHF	0.89		0.89	
Peak 15-minute volume, v15	402		593	
Trucks and buses	5	%	5	%
Recreational vehicles	0	%	0	%
Terrain type	Level		Level	
Grade	0.00	%	0.00	%
Segment length	0.00	mi	0.00	mi
Number of lanes	2		2	
Driver population adjustment, fP	1.00		1.00	
Trucks and buses PCE, ET	1.5		1.5	
Recreational vehicles PCE, ER	1.2		1.2	
Heavy vehicle adjustment, fHV	0.976		0.976	
Flow rate, vp	823	pcphpl	1215	pcphpl

RESULTS

Direction	1		2	
Flow rate, vp	823	pcphpl	1215	pcphpl
Free-flow speed, FFS	59.8	mph	59.8	mph
Avg. passenger-car travel speed, S	60.0	mph	60.0	mph
Level of service, LOS	B		C	
Density, D	13.7	pc/mi/ln	20.3	pc/mi/ln

Bicycle Level of Service

Posted speed limit, Sp		55
Percent of segment with occupied on-highway parking	0	0
Pavement rating, P	3	3
Flow rate in outside lane, vOL	803.4	1185.4
Effective width of outside lane, We	24.00	24.00
Effective speed factor, St	4.79	4.79
Bicycle LOS Score, BLOS	3.56	3.76
Bicycle LOS	D	D

Overall results are not computed when free-flow speed is less than 45 mph.

Phone: Fax:
E-mail:

OPERATIONAL ANALYSIS

Analyst:	ACS
Agency/Co:	Fehr and Peers
Date:	8/21/2014
Analysis Period:	AM Peak Hour
Highway:	STATE ROUTE 138
From/To:	130th St to 80th St
Jurisdiction:	CALTRANS
Analysis Year:	2040 Alt 1
Project ID:	STATE ROUTE 138 HCS ANALYSIS

FREE-FLOW SPEED

Direction	1		2	
Lane width	12.0	ft	12.0	ft
Lateral clearance:				
Right edge	6.0	ft	6.0	ft
Left edge	6.0	ft	6.0	ft
Total lateral clearance	12.0	ft	12.0	ft
Access points per mile	1		1	
Median type	Divided		Divided	
Free-flow speed:	Base		Base	
FFS or BFFS	60.0	mph	60.0	mph
Lane width adjustment, FLW	0.0	mph	0.0	mph
Lateral clearance adjustment, FLC	0.0	mph	0.0	mph
Median type adjustment, FM	0.0	mph	0.0	mph
Access points adjustment, FA	0.3	mph	0.3	mph
Free-flow speed	59.8	mph	59.8	mph

VOLUME

Direction	1		2	
Volume, V	1390	vph	1710	vph
Peak-hour factor, PHF	0.85		0.85	
Peak 15-minute volume, v15	409		503	
Trucks and buses	5	%	5	%
Recreational vehicles	0	%	0	%
Terrain type	Level		Level	
Grade	0.00	%	0.00	%
Segment length	0.00	mi	0.00	mi
Number of lanes	2		2	
Driver population adjustment, fP	1.00		1.00	
Trucks and buses PCE, ET	1.5		1.5	
Recreational vehicles PCE, ER	1.2		1.2	
Heavy vehicle adjustment, fHV	0.976		0.976	
Flow rate, vp	838	pcphpl	1031	pcphpl

RESULTS

Direction	1		2	
Flow rate, vp	838	pcphpl	1031	pcphpl
Free-flow speed, FFS	59.8	mph	59.8	mph
Avg. passenger-car travel speed, S	60.0	mph	60.0	mph
Level of service, LOS	B		B	
Density, D	14.0	pc/mi/ln	17.2	pc/mi/ln

Bicycle Level of Service

Posted speed limit, Sp		55
Percent of segment with occupied on-highway parking	0	0
Pavement rating, P	3	3
Flow rate in outside lane, vOL	817.6	1005.9
Effective width of outside lane, We	24.00	24.00
Effective speed factor, St	4.79	4.79
Bicycle LOS Score, BLOS	3.57	3.68
Bicycle LOS	D	D

Overall results are not computed when free-flow speed is less than 45 mph.

Phone: Fax:
E-mail:

OPERATIONAL ANALYSIS

Analyst:	ACS
Agency/Co:	Fehr and Peers
Date:	8/21/2014
Analysis Period:	PM Peak Hour
Highway:	STATE ROUTE 138
From/To:	130th St to 80th St
Jurisdiction:	CALTRANS
Analysis Year:	2040 Alt 1
Project ID:	STATE ROUTE 138 HCS ANALYSIS

FREE-FLOW SPEED

Direction	1		2	
Lane width	12.0	ft	12.0	ft
Lateral clearance:				
Right edge	6.0	ft	6.0	ft
Left edge	6.0	ft	6.0	ft
Total lateral clearance	12.0	ft	12.0	ft
Access points per mile	1		1	
Median type	Divided		Divided	
Free-flow speed:	Base		Base	
FFS or BFFS	60.0	mph	60.0	mph
Lane width adjustment, FLW	0.0	mph	0.0	mph
Lateral clearance adjustment, FLC	0.0	mph	0.0	mph
Median type adjustment, FM	0.0	mph	0.0	mph
Access points adjustment, FA	0.3	mph	0.3	mph
Free-flow speed	59.8	mph	59.8	mph

VOLUME

Direction	1		2	
Volume, V	1370	vph	1910	vph
Peak-hour factor, PHF	0.91		0.91	
Peak 15-minute volume, v15	376		525	
Trucks and buses	5	%	5	%
Recreational vehicles	0	%	0	%
Terrain type	Level		Level	
Grade	0.00	%	0.00	%
Segment length	0.00	mi	0.00	mi
Number of lanes	2		2	
Driver population adjustment, fP	1.00		1.00	
Trucks and buses PCE, ET	1.5		1.5	
Recreational vehicles PCE, ER	1.2		1.2	
Heavy vehicle adjustment, fHV	0.976		0.976	
Flow rate, vp	771	pcphpl	1075	pcphpl

RESULTS

Direction	1		2	
Flow rate, vp	771	pcphpl	1075	pcphpl
Free-flow speed, FFS	59.8	mph	59.8	mph
Avg. passenger-car travel speed, S	60.0	mph	60.0	mph
Level of service, LOS	B		B	
Density, D	12.9	pc/mi/ln	17.9	pc/mi/ln

Bicycle Level of Service

Posted speed limit, Sp		55
Percent of segment with occupied on-highway parking	0	0
Pavement rating, P	3	3
Flow rate in outside lane, vOL	752.7	1049.5
Effective width of outside lane, We	24.00	24.00
Effective speed factor, St	4.79	4.79
Bicycle LOS Score, BLOS	3.53	3.70
Bicycle LOS	D	D

Overall results are not computed when free-flow speed is less than 45 mph.

Phone: Fax:
E-mail:

OPERATIONAL ANALYSIS

Analyst:	ACS
Agency/Co:	Fehr and Peers
Date:	8/21/2014
Analysis Period:	AM Peak Hour
Highway:	STATE ROUTE 138
From/To:	80th St to 30th St
Jurisdiction:	CALTRANS
Analysis Year:	2040 Alt 1
Project ID:	STATE ROUTE 138 HCS ANALYSIS

FREE-FLOW SPEED

Direction	1		2	
Lane width	12.0	ft	12.0	ft
Lateral clearance:				
Right edge	6.0	ft	6.0	ft
Left edge	6.0	ft	6.0	ft
Total lateral clearance	12.0	ft	12.0	ft
Access points per mile	1		1	
Median type	Divided		Divided	
Free-flow speed:	Base		Base	
FFS or BFFS	60.0	mph	60.0	mph
Lane width adjustment, FLW	0.0	mph	0.0	mph
Lateral clearance adjustment, FLC	0.0	mph	0.0	mph
Median type adjustment, FM	0.0	mph	0.0	mph
Access points adjustment, FA	0.3	mph	0.3	mph
Free-flow speed	59.8	mph	59.8	mph

VOLUME

Direction	1		2	
Volume, V	1230	vph	1650	vph
Peak-hour factor, PHF	0.94		0.94	
Peak 15-minute volume, v15	327		439	
Trucks and buses	5	%	5	%
Recreational vehicles	0	%	0	%
Terrain type	Level		Level	
Grade	0.00	%	0.00	%
Segment length	0.00	mi	0.00	mi
Number of lanes	2		2	
Driver population adjustment, fP	1.00		1.00	
Trucks and buses PCE, ET	1.5		1.5	
Recreational vehicles PCE, ER	1.2		1.2	
Heavy vehicle adjustment, fHV	0.976		0.976	
Flow rate, vp	670	pcphpl	899	pcphpl

RESULTS

Direction	1		2	
Flow rate, vp	670	pcphpl	899	pcphpl
Free-flow speed, FFS	59.8	mph	59.8	mph
Avg. passenger-car travel speed, S	60.0	mph	60.0	mph
Level of service, LOS	B		B	
Density, D	11.2	pc/mi/ln	15.0	pc/mi/ln

Bicycle Level of Service

Posted speed limit, Sp		55
Percent of segment with occupied on-highway parking	0	0
Pavement rating, P	3	3
Flow rate in outside lane, vOL	654.3	877.7
Effective width of outside lane, We	24.00	24.00
Effective speed factor, St	4.79	4.79
Bicycle LOS Score, BLOS	3.46	3.61
Bicycle LOS	C	D

Overall results are not computed when free-flow speed is less than 45 mph.

Phone: Fax:
E-mail:

OPERATIONAL ANALYSIS

Analyst:	ACS
Agency/Co:	Fehr and Peers
Date:	8/21/2014
Analysis Period:	PM Peak Hour
Highway:	STATE ROUTE 138
From/To:	80th St to 30th St
Jurisdiction:	CALTRANS
Analysis Year:	2040 Alt 1
Project ID:	STATE ROUTE 138 HCS ANALYSIS

FREE-FLOW SPEED

Direction	1		2	
Lane width	12.0	ft	12.0	ft
Lateral clearance:				
Right edge	6.0	ft	6.0	ft
Left edge	6.0	ft	6.0	ft
Total lateral clearance	12.0	ft	12.0	ft
Access points per mile	1		1	
Median type	Divided		Divided	
Free-flow speed:	Base		Base	
FFS or BFFS	60.0	mph	60.0	mph
Lane width adjustment, FLW	0.0	mph	0.0	mph
Lateral clearance adjustment, FLC	0.0	mph	0.0	mph
Median type adjustment, FM	0.0	mph	0.0	mph
Access points adjustment, FA	0.3	mph	0.3	mph
Free-flow speed	59.8	mph	59.8	mph

VOLUME

Direction	1		2	
Volume, V	1280	vph	1940	vph
Peak-hour factor, PHF	0.94		0.94	
Peak 15-minute volume, v15	340		516	
Trucks and buses	5	%	5	%
Recreational vehicles	0	%	0	%
Terrain type	Level		Level	
Grade	0.00	%	0.00	%
Segment length	0.00	mi	0.00	mi
Number of lanes	2		2	
Driver population adjustment, fP	1.00		1.00	
Trucks and buses PCE, ET	1.5		1.5	
Recreational vehicles PCE, ER	1.2		1.2	
Heavy vehicle adjustment, fHV	0.976		0.976	
Flow rate, vp	697	pcphpl	1057	pcphpl

RESULTS

Direction	1		2	
Flow rate, vp	697	pcphpl	1057	pcphpl
Free-flow speed, FFS	59.8	mph	59.8	mph
Avg. passenger-car travel speed, S	60.0	mph	60.0	mph
Level of service, LOS	B		B	
Density, D	11.6	pc/mi/ln	17.6	pc/mi/ln

Bicycle Level of Service

Posted speed limit, Sp		55
Percent of segment with occupied on-highway parking	0	0
Pavement rating, P	3	3
Flow rate in outside lane, vOL	680.9	1031.9
Effective width of outside lane, We	24.00	24.00
Effective speed factor, St	4.79	4.79
Bicycle LOS Score, BLOS	3.48	3.69
Bicycle LOS	C	D

Overall results are not computed when free-flow speed is less than 45 mph.

Phone: Fax:
E-mail:

OPERATIONAL ANALYSIS

Analyst:	ACS
Agency/Co:	Fehr and Peers
Date:	8/21/2014
Analysis Period:	AM Peak Hour
Highway:	STATE ROUTE 138
From/To:	30th St to Route 14
Jurisdiction:	CALTRANS
Analysis Year:	2040 Alt 1
Project ID:	STATE ROUTE 138 HCS ANALYSIS

FREE-FLOW SPEED

Direction	1		2	
Lane width	12.0	ft	12.0	ft
Lateral clearance:				
Right edge	6.0	ft	6.0	ft
Left edge	6.0	ft	6.0	ft
Total lateral clearance	12.0	ft	12.0	ft
Access points per mile	1		1	
Median type	Divided		Divided	
Free-flow speed:	Base		Base	
FFS or BFFS	60.0	mph	60.0	mph
Lane width adjustment, FLW	0.0	mph	0.0	mph
Lateral clearance adjustment, FLC	0.0	mph	0.0	mph
Median type adjustment, FM	0.0	mph	0.0	mph
Access points adjustment, FA	0.3	mph	0.3	mph
Free-flow speed	59.8	mph	59.8	mph

VOLUME

Direction	1		2	
Volume, V	1230	vph	1450	vph
Peak-hour factor, PHF	0.89		0.89	
Peak 15-minute volume, v15	346		407	
Trucks and buses	5	%	5	%
Recreational vehicles	0	%	0	%
Terrain type	Level		Level	
Grade	0.00	%	0.00	%
Segment length	0.00	mi	0.00	mi
Number of lanes	2		2	
Driver population adjustment, fP	1.00		1.00	
Trucks and buses PCE, ET	1.5		1.5	
Recreational vehicles PCE, ER	1.2		1.2	
Heavy vehicle adjustment, fHV	0.976		0.976	
Flow rate, vp	708	pcphpl	834	pcphpl

RESULTS

Direction	1		2	
Flow rate, vp	708	pcphpl	834	pcphpl
Free-flow speed, FFS	59.8	mph	59.8	mph
Avg. passenger-car travel speed, S	60.0	mph	60.0	mph
Level of service, LOS	B		B	
Density, D	11.8	pc/mi/ln	13.9	pc/mi/ln

Bicycle Level of Service

Posted speed limit, Sp		55
Percent of segment with occupied on-highway parking	0	0
Pavement rating, P	3	3
Flow rate in outside lane, vOL	691.0	814.6
Effective width of outside lane, We	24.00	24.00
Effective speed factor, St	4.79	4.79
Bicycle LOS Score, BLOS	3.49	3.57
Bicycle LOS	C	D

Overall results are not computed when free-flow speed is less than 45 mph.

Phone: Fax:
E-mail:

OPERATIONAL ANALYSIS

Analyst:	ACS
Agency/Co:	Fehr and Peers
Date:	8/21/2014
Analysis Period:	PM Peak Hour
Highway:	STATE ROUTE 138
From/To:	30th St to Route 14
Jurisdiction:	CALTRANS
Analysis Year:	2040 Alt 1
Project ID:	STATE ROUTE 138 HCS ANALYSIS

FREE-FLOW SPEED

Direction	1		2	
Lane width	12.0	ft	12.0	ft
Lateral clearance:				
Right edge	6.0	ft	6.0	ft
Left edge	6.0	ft	6.0	ft
Total lateral clearance	12.0	ft	12.0	ft
Access points per mile	1		1	
Median type	Divided		Divided	
Free-flow speed:	Base		Base	
FFS or BFFS	60.0	mph	60.0	mph
Lane width adjustment, FLW	0.0	mph	0.0	mph
Lateral clearance adjustment, FLC	0.0	mph	0.0	mph
Median type adjustment, FM	0.0	mph	0.0	mph
Access points adjustment, FA	0.3	mph	0.3	mph
Free-flow speed	59.8	mph	59.8	mph

VOLUME

Direction	1		2	
Volume, V	1220	vph	1720	vph
Peak-hour factor, PHF	0.94		0.94	
Peak 15-minute volume, v15	324		457	
Trucks and buses	5	%	5	%
Recreational vehicles	0	%	0	%
Terrain type	Level		Level	
Grade	0.00	%	0.00	%
Segment length	0.00	mi	0.00	mi
Number of lanes	2		2	
Driver population adjustment, fP	1.00		1.00	
Trucks and buses PCE, ET	1.5		1.5	
Recreational vehicles PCE, ER	1.2		1.2	
Heavy vehicle adjustment, fHV	0.976		0.976	
Flow rate, vp	665	pcphpl	937	pcphpl

RESULTS

Direction	1		2	
Flow rate, vp	665	pcphpl	937	pcphpl
Free-flow speed, FFS	59.8	mph	59.8	mph
Avg. passenger-car travel speed, S	60.0	mph	60.0	mph
Level of service, LOS	B		B	
Density, D	11.1	pc/mi/ln	15.6	pc/mi/ln

Bicycle Level of Service

Posted speed limit, Sp		55
Percent of segment with occupied on-highway parking	0	0
Pavement rating, P	3	3
Flow rate in outside lane, vOL	648.9	914.9
Effective width of outside lane, We	24.00	24.00
Effective speed factor, St	4.79	4.79
Bicycle LOS Score, BLOS	3.46	3.63
Bicycle LOS	C	D

Overall results are not computed when free-flow speed is less than 45 mph.

Phone: Fax:
E-mail:

OPERATIONAL ANALYSIS

Analyst:	ACS
Agency/Co:	Fehr and Peers
Date:	8/21/2014
Analysis Period:	AM Peak Hour
Highway:	STATE ROUTE 138
From/To:	I-5 Connector to 1-Gorman Post
Jurisdiction:	CALTRANS
Analysis Year:	2040 Alt 2
Project ID:	STATE ROUTE 138 HCS ANALYSIS

FREE-FLOW SPEED

Direction	1		2	
Lane width	12.0	ft	12.0	ft
Lateral clearance:				
Right edge	6.0	ft	6.0	ft
Left edge	6.0	ft	6.0	ft
Total lateral clearance	12.0	ft	12.0	ft
Access points per mile	1		1	
Median type	Divided		Divided	
Free-flow speed:	Base		Base	
FFS or BFFS	60.0	mph	60.0	mph
Lane width adjustment, FLW	0.0	mph	0.0	mph
Lateral clearance adjustment, FLC	0.0	mph	0.0	mph
Median type adjustment, FM	0.0	mph	0.0	mph
Access points adjustment, FA	0.3	mph	0.3	mph
Free-flow speed	59.8	mph	59.8	mph

VOLUME

Direction	1		2	
Volume, V	1770	vph	3200	vph
Peak-hour factor, PHF	0.87		0.87	
Peak 15-minute volume, v15	509		920	
Trucks and buses	5	%	5	%
Recreational vehicles	0	%	0	%
Terrain type	Level		Level	
Grade	0.00	%	0.00	%
Segment length	0.00	mi	0.00	mi
Number of lanes	3		3	
Driver population adjustment, fP	1.00		1.00	
Trucks and buses PCE, ET	1.5		1.5	
Recreational vehicles PCE, ER	1.2		1.2	
Heavy vehicle adjustment, fHV	0.976		0.976	
Flow rate, vp	695	pcphpl	1256	pcphpl

RESULTS

Direction	1		2	
Flow rate, vp	695	pcphpl	1256	pcphpl
Free-flow speed, FFS	59.8	mph	59.8	mph
Avg. passenger-car travel speed, S	60.0	mph	60.0	mph
Level of service, LOS	B		C	
Density, D	11.6	pc/mi/ln	20.9	pc/mi/ln

Bicycle Level of Service

Posted speed limit, Sp		55
Percent of segment with occupied on-highway parking	0	0
Pavement rating, P	3	3
Flow rate in outside lane, vOL	678.2	1226.1
Effective width of outside lane, We	24.00	24.00
Effective speed factor, St	4.79	4.79
Bicycle LOS Score, BLOS	3.48	3.78
Bicycle LOS	C	D

Overall results are not computed when free-flow speed is less than 45 mph.

Phone: Fax:
E-mail:

OPERATIONAL ANALYSIS

Analyst:	ACS
Agency/Co:	Fehr and Peers
Date:	8/21/2014
Analysis Period:	PM Peak Hour
Highway:	STATE ROUTE 138
From/To:	I-5 Connector to 1-Gorman Post
Jurisdiction:	CALTRANS
Analysis Year:	2040 Alt 2
Project ID:	STATE ROUTE 138 HCS ANALYSIS

FREE-FLOW SPEED

Direction	1		2	
Lane width	12.0	ft	12.0	ft
Lateral clearance:				
Right edge	6.0	ft	6.0	ft
Left edge	6.0	ft	6.0	ft
Total lateral clearance	12.0	ft	12.0	ft
Access points per mile	1		1	
Median type	Divided		Divided	
Free-flow speed:	Base		Base	
FFS or BFFS	60.0	mph	60.0	mph
Lane width adjustment, FLW	0.0	mph	0.0	mph
Lateral clearance adjustment, FLC	0.0	mph	0.0	mph
Median type adjustment, FM	0.0	mph	0.0	mph
Access points adjustment, FA	0.3	mph	0.3	mph
Free-flow speed	59.8	mph	59.8	mph

VOLUME

Direction	1		2	
Volume, V	3100	vph	2180	vph
Peak-hour factor, PHF	0.86		0.86	
Peak 15-minute volume, v15	901		634	
Trucks and buses	5	%	5	%
Recreational vehicles	0	%	0	%
Terrain type	Level		Level	
Grade	0.00	%	0.00	%
Segment length	0.00	mi	0.00	mi
Number of lanes	3		3	
Driver population adjustment, fP	1.00		1.00	
Trucks and buses PCE, ET	1.5		1.5	
Recreational vehicles PCE, ER	1.2		1.2	
Heavy vehicle adjustment, fHV	0.976		0.976	
Flow rate, vp	1231	pcphpl	866	pcphpl

RESULTS

Direction	1		2	
Flow rate, vp	1231	pcphpl	866	pcphpl
Free-flow speed, FFS	59.8	mph	59.8	mph
Avg. passenger-car travel speed, S	60.0	mph	60.0	mph
Level of service, LOS	C		B	
Density, D	20.5	pc/mi/ln	14.4	pc/mi/ln

Bicycle Level of Service

Posted speed limit, Sp		55
Percent of segment with occupied on-highway parking	0	0
Pavement rating, P	3	3
Flow rate in outside lane, vOL	1201.6	845.0
Effective width of outside lane, We	24.00	24.00
Effective speed factor, St	4.79	4.79
Bicycle LOS Score, BLOS	3.77	3.59
Bicycle LOS	D	D

Overall results are not computed when free-flow speed is less than 45 mph.

Phone: Fax:
E-mail:

OPERATIONAL ANALYSIS

Analyst:	ACS
Agency/Co:	Fehr and Peers
Date:	8/21/2014
Analysis Period:	AM Peak Hour
Highway:	STATE ROUTE 138
From/To:	Gorman Post to Private Rd
Jurisdiction:	CALTRANS
Analysis Year:	2040 Alt 2
Project ID:	STATE ROUTE 138 HCS ANALYSIS

FREE-FLOW SPEED

Direction	1		2	
Lane width	12.0	ft	12.0	ft
Lateral clearance:				
Right edge	6.0	ft	6.0	ft
Left edge	6.0	ft	6.0	ft
Total lateral clearance	12.0	ft	12.0	ft
Access points per mile	1		1	
Median type	Divided		Divided	
Free-flow speed:	Base		Base	
FFS or BFFS	60.0	mph	60.0	mph
Lane width adjustment, FLW	0.0	mph	0.0	mph
Lateral clearance adjustment, FLC	0.0	mph	0.0	mph
Median type adjustment, FM	0.0	mph	0.0	mph
Access points adjustment, FA	0.3	mph	0.3	mph
Free-flow speed	59.8	mph	59.8	mph

VOLUME

Direction	1		2	
Volume, V	1790	vph	2820	vph
Peak-hour factor, PHF	0.79		0.79	
Peak 15-minute volume, v15	566		892	
Trucks and buses	5	%	5	%
Recreational vehicles	0	%	0	%
Terrain type	Level		Level	
Grade	0.00	%	0.00	%
Segment length	0.00	mi	0.00	mi
Number of lanes	3		3	
Driver population adjustment, fP	1.00		1.00	
Trucks and buses PCE, ET	1.5		1.5	
Recreational vehicles PCE, ER	1.2		1.2	
Heavy vehicle adjustment, fHV	0.976		0.976	
Flow rate, vp	774	pcphpl	1219	pcphpl

RESULTS

Direction	1		2	
Flow rate, vp	774	pcphpl	1219	pcphpl
Free-flow speed, FFS	59.8	mph	59.8	mph
Avg. passenger-car travel speed, S	60.0	mph	60.0	mph
Level of service, LOS	B		C	
Density, D	12.9	pc/mi/ln	20.3	pc/mi/ln

Bicycle Level of Service

Posted speed limit, Sp		55
Percent of segment with occupied on-highway parking	0	0
Pavement rating, P	3	3
Flow rate in outside lane, vOL	755.3	1189.9
Effective width of outside lane, We	24.00	24.00
Effective speed factor, St	4.79	4.79
Bicycle LOS Score, BLOS	3.53	3.76
Bicycle LOS	D	D

Overall results are not computed when free-flow speed is less than 45 mph.

Phone: Fax:
E-mail:

OPERATIONAL ANALYSIS

Analyst:	ACS
Agency/Co:	Fehr and Peers
Date:	8/21/2014
Analysis Period:	PM Peak Hour
Highway:	STATE ROUTE 138
From/To:	Gorman Post to Private Rd
Jurisdiction:	CALTRANS
Analysis Year:	2040 Alt 2
Project ID:	STATE ROUTE 138 HCS ANALYSIS

FREE-FLOW SPEED

Direction	1		2	
Lane width	12.0	ft	12.0	ft
Lateral clearance:				
Right edge	6.0	ft	6.0	ft
Left edge	6.0	ft	6.0	ft
Total lateral clearance	12.0	ft	12.0	ft
Access points per mile	1		1	
Median type	Divided		Divided	
Free-flow speed:	Base		Base	
FFS or BFFS	60.0	mph	60.0	mph
Lane width adjustment, FLW	0.0	mph	0.0	mph
Lateral clearance adjustment, FLC	0.0	mph	0.0	mph
Median type adjustment, FM	0.0	mph	0.0	mph
Access points adjustment, FA	0.3	mph	0.3	mph
Free-flow speed	59.8	mph	59.8	mph

VOLUME

Direction	1		2	
Volume, V	2720	vph	2190	vph
Peak-hour factor, PHF	0.90		0.90	
Peak 15-minute volume, v15	756		608	
Trucks and buses	5	%	5	%
Recreational vehicles	0	%	0	%
Terrain type	Level		Level	
Grade	0.00	%	0.00	%
Segment length	0.00	mi	0.00	mi
Number of lanes	3		3	
Driver population adjustment, fP	1.00		1.00	
Trucks and buses PCE, ET	1.5		1.5	
Recreational vehicles PCE, ER	1.2		1.2	
Heavy vehicle adjustment, fHV	0.976		0.976	
Flow rate, vp	1032	pcphpl	831	pcphpl

RESULTS

Direction	1		2	
Flow rate, vp	1032	pcphpl	831	pcphpl
Free-flow speed, FFS	59.8	mph	59.8	mph
Avg. passenger-car travel speed, S	60.0	mph	60.0	mph
Level of service, LOS	B		B	
Density, D	17.2	pc/mi/ln	13.9	pc/mi/ln

Bicycle Level of Service

Posted speed limit, Sp		55
Percent of segment with occupied on-highway parking	0	0
Pavement rating, P	3	3
Flow rate in outside lane, vOL	1007.4	811.1
Effective width of outside lane, We	24.00	24.00
Effective speed factor, St	4.79	4.79
Bicycle LOS Score, BLOS	3.68	3.57
Bicycle LOS	D	D

Overall results are not computed when free-flow speed is less than 45 mph.

Phone: Fax:
E-mail:

OPERATIONAL ANALYSIS

Analyst:	ACS
Agency/Co:	Fehr and Peers
Date:	8/21/2014
Analysis Period:	AM Peak Hour
Highway:	STATE ROUTE 138
From/To:	Private Rd to 300th St
Jurisdiction:	CALTRANS
Analysis Year:	2040 Alt 2
Project ID:	STATE ROUTE 138 HCS ANALYSIS

FREE-FLOW SPEED

Direction	1		2	
Lane width	12.0	ft	12.0	ft
Lateral clearance:				
Right edge	6.0	ft	6.0	ft
Left edge	6.0	ft	6.0	ft
Total lateral clearance	12.0	ft	12.0	ft
Access points per mile	1		1	
Median type	Divided		Divided	
Free-flow speed:	Base		Base	
FFS or BFFS	60.0	mph	60.0	mph
Lane width adjustment, FLW	0.0	mph	0.0	mph
Lateral clearance adjustment, FLC	0.0	mph	0.0	mph
Median type adjustment, FM	0.0	mph	0.0	mph
Access points adjustment, FA	0.3	mph	0.3	mph
Free-flow speed	59.8	mph	59.8	mph

VOLUME

Direction	1		2	
Volume, V	1930	vph	2750	vph
Peak-hour factor, PHF	0.72		0.72	
Peak 15-minute volume, v15	670		955	
Trucks and buses	5	%	5	%
Recreational vehicles	0	%	0	%
Terrain type	Level		Level	
Grade	0.00	%	0.00	%
Segment length	0.00	mi	0.00	mi
Number of lanes	3		3	
Driver population adjustment, fP	1.00		1.00	
Trucks and buses PCE, ET	1.5		1.5	
Recreational vehicles PCE, ER	1.2		1.2	
Heavy vehicle adjustment, fHV	0.976		0.976	
Flow rate, vp	915	pcphpl	1304	pcphpl

RESULTS

Direction	1		2	
Flow rate, vp	915	pcphpl	1304	pcphpl
Free-flow speed, FFS	59.8	mph	59.8	mph
Avg. passenger-car travel speed, S	60.0	mph	60.0	mph
Level of service, LOS	B		C	
Density, D	15.3	pc/mi/ln	21.7	pc/mi/ln

Bicycle Level of Service

Posted speed limit, Sp		55
Percent of segment with occupied on-highway parking	0	0
Pavement rating, P	3	3
Flow rate in outside lane, vOL	893.5	1273.1
Effective width of outside lane, We	24.00	24.00
Effective speed factor, St	4.79	4.79
Bicycle LOS Score, BLOS	3.62	3.80
Bicycle LOS	D	D

Overall results are not computed when free-flow speed is less than 45 mph.

Phone: Fax:
E-mail:

OPERATIONAL ANALYSIS

Analyst:	ACS
Agency/Co:	Fehr and Peers
Date:	8/21/2014
Analysis Period:	PM Peak Hour
Highway:	STATE ROUTE 138
From/To:	Private Rd to 300th St
Jurisdiction:	CALTRANS
Analysis Year:	2040 Alt 2
Project ID:	STATE ROUTE 138 HCS ANALYSIS

FREE-FLOW SPEED

Direction	1		2	
Lane width	12.0	ft	12.0	ft
Lateral clearance:				
Right edge	6.0	ft	6.0	ft
Left edge	6.0	ft	6.0	ft
Total lateral clearance	12.0	ft	12.0	ft
Access points per mile	1		1	
Median type	Divided		Divided	
Free-flow speed:	Base		Base	
FFS or BFFS	60.0	mph	60.0	mph
Lane width adjustment, FLW	0.0	mph	0.0	mph
Lateral clearance adjustment, FLC	0.0	mph	0.0	mph
Median type adjustment, FM	0.0	mph	0.0	mph
Access points adjustment, FA	0.3	mph	0.3	mph
Free-flow speed	59.8	mph	59.8	mph

VOLUME

Direction	1		2	
Volume, V	2570	vph	2410	vph
Peak-hour factor, PHF	0.77		0.77	
Peak 15-minute volume, v15	834		782	
Trucks and buses	5	%	5	%
Recreational vehicles	0	%	0	%
Terrain type	Level		Level	
Grade	0.00	%	0.00	%
Segment length	0.00	mi	0.00	mi
Number of lanes	3		3	
Driver population adjustment, fP	1.00		1.00	
Trucks and buses PCE, ET	1.5		1.5	
Recreational vehicles PCE, ER	1.2		1.2	
Heavy vehicle adjustment, fHV	0.976		0.976	
Flow rate, vp	1140	pcphpl	1069	pcphpl

RESULTS

Direction	1		2	
Flow rate, vp	1140	pcphpl	1069	pcphpl
Free-flow speed, FFS	59.8	mph	59.8	mph
Avg. passenger-car travel speed, S	60.0	mph	60.0	mph
Level of service, LOS	C		B	
Density, D	19.0	pc/mi/ln	17.8	pc/mi/ln

Bicycle Level of Service

Posted speed limit, Sp		55
Percent of segment with occupied on-highway parking	0	0
Pavement rating, P	3	3
Flow rate in outside lane, vOL	1112.6	1043.3
Effective width of outside lane, We	24.00	24.00
Effective speed factor, St	4.79	4.79
Bicycle LOS Score, BLOS	3.73	3.70
Bicycle LOS	D	D

Overall results are not computed when free-flow speed is less than 45 mph.

Phone: Fax:
E-mail:

OPERATIONAL ANALYSIS

Analyst:	ACS
Agency/Co:	Fehr and Peers
Date:	8/21/2014
Analysis Period:	AM Peak Hour
Highway:	STATE ROUTE 138
From/To:	280th St to 270th St
Jurisdiction:	CALTRANS
Analysis Year:	2040 Alt 2
Project ID:	STATE ROUTE 138 HCS ANALYSIS

FREE-FLOW SPEED

Direction	1		2	
Lane width	12.0	ft	12.0	ft
Lateral clearance:				
Right edge	6.0	ft	6.0	ft
Left edge	6.0	ft	6.0	ft
Total lateral clearance	12.0	ft	12.0	ft
Access points per mile	1		1	
Median type	Divided		Divided	
Free-flow speed:	Base		Base	
FFS or BFFS	60.0	mph	60.0	mph
Lane width adjustment, FLW	0.0	mph	0.0	mph
Lateral clearance adjustment, FLC	0.0	mph	0.0	mph
Median type adjustment, FM	0.0	mph	0.0	mph
Access points adjustment, FA	0.3	mph	0.3	mph
Free-flow speed	59.8	mph	59.8	mph

VOLUME

Direction	1		2	
Volume, V	1700	vph	2080	vph
Peak-hour factor, PHF	0.97		0.97	
Peak 15-minute volume, v15	438		536	
Trucks and buses	5	%	5	%
Recreational vehicles	0	%	0	%
Terrain type	Level		Level	
Grade	0.00	%	0.00	%
Segment length	0.00	mi	0.00	mi
Number of lanes	2		2	
Driver population adjustment, fP	1.00		1.00	
Trucks and buses PCE, ET	1.5		1.5	
Recreational vehicles PCE, ER	1.2		1.2	
Heavy vehicle adjustment, fHV	0.976		0.976	
Flow rate, vp	898	pcphpl	1098	pcphpl

RESULTS

Direction	1		2	
Flow rate, vp	898	pcphpl	1098	pcphpl
Free-flow speed, FFS	59.8	mph	59.8	mph
Avg. passenger-car travel speed, S	60.0	mph	60.0	mph
Level of service, LOS	B		C	
Density, D	15.0	pc/mi/ln	18.3	pc/mi/ln

Bicycle Level of Service

Posted speed limit, Sp		55
Percent of segment with occupied on-highway parking	0	0
Pavement rating, P	3	3
Flow rate in outside lane, vOL	876.3	1072.2
Effective width of outside lane, We	24.00	24.00
Effective speed factor, St	4.79	4.79
Bicycle LOS Score, BLOS	3.61	3.71
Bicycle LOS	D	D

Overall results are not computed when free-flow speed is less than 45 mph.

Phone: Fax:
E-mail:

OPERATIONAL ANALYSIS

Analyst:	ACS
Agency/Co:	Fehr and Peers
Date:	8/21/2014
Analysis Period:	PM Peak Hour
Highway:	STATE ROUTE 138
From/To:	280th St to 270th St
Jurisdiction:	CALTRANS
Analysis Year:	2040 Alt 2
Project ID:	STATE ROUTE 138 HCS ANALYSIS

FREE-FLOW SPEED

Direction	1		2	
Lane width	12.0	ft	12.0	ft
Lateral clearance:				
Right edge	6.0	ft	6.0	ft
Left edge	6.0	ft	6.0	ft
Total lateral clearance	12.0	ft	12.0	ft
Access points per mile	1		1	
Median type	Divided		Divided	
Free-flow speed:	Base		Base	
FFS or BFFS	60.0	mph	60.0	mph
Lane width adjustment, FLW	0.0	mph	0.0	mph
Lateral clearance adjustment, FLC	0.0	mph	0.0	mph
Median type adjustment, FM	0.0	mph	0.0	mph
Access points adjustment, FA	0.3	mph	0.3	mph
Free-flow speed	59.8	mph	59.8	mph

VOLUME

Direction	1		2	
Volume, V	1630	vph	2150	vph
Peak-hour factor, PHF	0.90		0.90	
Peak 15-minute volume, v15	453		597	
Trucks and buses	5	%	5	%
Recreational vehicles	0	%	0	%
Terrain type	Level		Level	
Grade	0.00	%	0.00	%
Segment length	0.00	mi	0.00	mi
Number of lanes	2		2	
Driver population adjustment, fP	1.00		1.00	
Trucks and buses PCE, ET	1.5		1.5	
Recreational vehicles PCE, ER	1.2		1.2	
Heavy vehicle adjustment, fHV	0.976		0.976	
Flow rate, vp	928	pcphpl	1224	pcphpl

RESULTS

Direction	1		2	
Flow rate, vp	928	pcphpl	1224	pcphpl
Free-flow speed, FFS	59.8	mph	59.8	mph
Avg. passenger-car travel speed, S	60.0	mph	60.0	mph
Level of service, LOS	B		C	
Density, D	15.5	pc/mi/ln	20.4	pc/mi/ln

Bicycle Level of Service

Posted speed limit, Sp		55
Percent of segment with occupied on-highway parking	0	0
Pavement rating, P	3	3
Flow rate in outside lane, vOL	905.6	1194.4
Effective width of outside lane, We	24.00	24.00
Effective speed factor, St	4.79	4.79
Bicycle LOS Score, BLOS	3.62	3.76
Bicycle LOS	D	D

Overall results are not computed when free-flow speed is less than 45 mph.

Phone: Fax:
E-mail:

OPERATIONAL ANALYSIS

Analyst:	ACS
Agency/Co:	Fehr and Peers
Date:	8/21/2014
Analysis Period:	AM Peak Hour
Highway:	STATE ROUTE 138
From/To:	Three Points Rd to 245th St
Jurisdiction:	CALTRANS
Analysis Year:	2040 Alt 2
Project ID:	STATE ROUTE 138 HCS ANALYSIS

FREE-FLOW SPEED

Direction	1		2	
Lane width	12.0	ft	12.0	ft
Lateral clearance:				
Right edge	6.0	ft	6.0	ft
Left edge	6.0	ft	6.0	ft
Total lateral clearance	12.0	ft	12.0	ft
Access points per mile	1		1	
Median type	Divided		Divided	
Free-flow speed:	Base		Base	
FFS or BFFS	60.0	mph	60.0	mph
Lane width adjustment, FLW	0.0	mph	0.0	mph
Lateral clearance adjustment, FLC	0.0	mph	0.0	mph
Median type adjustment, FM	0.0	mph	0.0	mph
Access points adjustment, FA	0.3	mph	0.3	mph
Free-flow speed	59.8	mph	59.8	mph

VOLUME

Direction	1		2	
Volume, V	1700	vph	2080	vph
Peak-hour factor, PHF	0.79		0.79	
Peak 15-minute volume, v15	538		658	
Trucks and buses	5	%	5	%
Recreational vehicles	0	%	0	%
Terrain type	Level		Level	
Grade	0.00	%	0.00	%
Segment length	0.00	mi	0.00	mi
Number of lanes	2		2	
Driver population adjustment, fP	1.00		1.00	
Trucks and buses PCE, ET	1.5		1.5	
Recreational vehicles PCE, ER	1.2		1.2	
Heavy vehicle adjustment, fHV	0.976		0.976	
Flow rate, vp	1102	pcphpl	1349	pcphpl

RESULTS

Direction	1		2	
Flow rate, vp	1102	pcphpl	1349	pcphpl
Free-flow speed, FFS	59.8	mph	59.8	mph
Avg. passenger-car travel speed, S	60.0	mph	60.0	mph
Level of service, LOS	C		C	
Density, D	18.4	pc/mi/ln	22.5	pc/mi/ln

Bicycle Level of Service

Posted speed limit, Sp		55
Percent of segment with occupied on-highway parking	0	0
Pavement rating, P	3	3
Flow rate in outside lane, vOL	1075.9	1316.5
Effective width of outside lane, We	24.00	24.00
Effective speed factor, St	4.79	4.79
Bicycle LOS Score, BLOS	3.71	3.81
Bicycle LOS	D	D

Overall results are not computed when free-flow speed is less than 45 mph.

Phone: Fax:
E-mail:

OPERATIONAL ANALYSIS

Analyst:	ACS
Agency/Co:	Fehr and Peers
Date:	8/21/2014
Analysis Period:	PM Peak Hour
Highway:	STATE ROUTE 138
From/To:	Three Points Rd to 245th St
Jurisdiction:	CALTRANS
Analysis Year:	2040 Alt 2
Project ID:	STATE ROUTE 138 HCS ANALYSIS

FREE-FLOW SPEED

Direction	1		2	
Lane width	12.0	ft	12.0	ft
Lateral clearance:				
Right edge	6.0	ft	6.0	ft
Left edge	6.0	ft	6.0	ft
Total lateral clearance	12.0	ft	12.0	ft
Access points per mile	1		1	
Median type	Divided		Divided	
Free-flow speed:	Base		Base	
FFS or BFFS	60.0	mph	60.0	mph
Lane width adjustment, FLW	0.0	mph	0.0	mph
Lateral clearance adjustment, FLC	0.0	mph	0.0	mph
Median type adjustment, FM	0.0	mph	0.0	mph
Access points adjustment, FA	0.3	mph	0.3	mph
Free-flow speed	59.8	mph	59.8	mph

VOLUME

Direction	1		2	
Volume, V	1630	vph	2150	vph
Peak-hour factor, PHF	0.89		0.89	
Peak 15-minute volume, v15	458		604	
Trucks and buses	5	%	5	%
Recreational vehicles	0	%	0	%
Terrain type	Level		Level	
Grade	0.00	%	0.00	%
Segment length	0.00	mi	0.00	mi
Number of lanes	2		2	
Driver population adjustment, fP	1.00		1.00	
Trucks and buses PCE, ET	1.5		1.5	
Recreational vehicles PCE, ER	1.2		1.2	
Heavy vehicle adjustment, fHV	0.976		0.976	
Flow rate, vp	938	pcphpl	1238	pcphpl

RESULTS

Direction	1		2	
Flow rate, vp	938	pcphpl	1238	pcphpl
Free-flow speed, FFS	59.8	mph	59.8	mph
Avg. passenger-car travel speed, S	60.0	mph	60.0	mph
Level of service, LOS	B		C	
Density, D	15.6	pc/mi/ln	20.6	pc/mi/ln

Bicycle Level of Service

Posted speed limit, Sp		55
Percent of segment with occupied on-highway parking	0	0
Pavement rating, P	3	3
Flow rate in outside lane, vOL	915.7	1207.9
Effective width of outside lane, We	24.00	24.00
Effective speed factor, St	4.79	4.79
Bicycle LOS Score, BLOS	3.63	3.77
Bicycle LOS	D	D

Overall results are not computed when free-flow speed is less than 45 mph.

Phone: Fax:
E-mail:

OPERATIONAL ANALYSIS

Analyst:	ACS
Agency/Co:	Fehr and Peers
Date:	8/21/2014
Analysis Period:	AM Peak Hour
Highway:	STATE ROUTE 138
From/To:	230th St to 190th St
Jurisdiction:	CALTRANS
Analysis Year:	2040 Alt 2
Project ID:	STATE ROUTE 138 HCS ANALYSIS

FREE-FLOW SPEED

Direction	1		2	
Lane width	12.0	ft	12.0	ft
Lateral clearance:				
Right edge	6.0	ft	6.0	ft
Left edge	6.0	ft	6.0	ft
Total lateral clearance	12.0	ft	12.0	ft
Access points per mile	1		1	
Median type	Divided		Divided	
Free-flow speed:	Base		Base	
FFS or BFFS	60.0	mph	60.0	mph
Lane width adjustment, FLW	0.0	mph	0.0	mph
Lateral clearance adjustment, FLC	0.0	mph	0.0	mph
Median type adjustment, FM	0.0	mph	0.0	mph
Access points adjustment, FA	0.3	mph	0.3	mph
Free-flow speed	59.8	mph	59.8	mph

VOLUME

Direction	1		2	
Volume, V	1510	vph	1940	vph
Peak-hour factor, PHF	0.82		0.82	
Peak 15-minute volume, v15	460		591	
Trucks and buses	5	%	5	%
Recreational vehicles	0	%	0	%
Terrain type	Level		Level	
Grade	0.00	%	0.00	%
Segment length	0.00	mi	0.00	mi
Number of lanes	2		2	
Driver population adjustment, fP	1.00		1.00	
Trucks and buses PCE, ET	1.5		1.5	
Recreational vehicles PCE, ER	1.2		1.2	
Heavy vehicle adjustment, fHV	0.976		0.976	
Flow rate, vp	943	pcphpl	1212	pcphpl

RESULTS

Direction	1		2	
Flow rate, vp	943	pcphpl	1212	pcphpl
Free-flow speed, FFS	59.8	mph	59.8	mph
Avg. passenger-car travel speed, S	60.0	mph	60.0	mph
Level of service, LOS	B		C	
Density, D	15.7	pc/mi/ln	20.2	pc/mi/ln

Bicycle Level of Service

Posted speed limit, Sp		55
Percent of segment with occupied on-highway parking	0	0
Pavement rating, P	3	3
Flow rate in outside lane, vOL	920.7	1182.9
Effective width of outside lane, We	24.00	24.00
Effective speed factor, St	4.79	4.79
Bicycle LOS Score, BLOS	3.63	3.76
Bicycle LOS	D	D

Overall results are not computed when free-flow speed is less than 45 mph.

Phone: Fax:
E-mail:

OPERATIONAL ANALYSIS

Analyst:	ACS
Agency/Co:	Fehr and Peers
Date:	8/21/2014
Analysis Period:	PM Peak Hour
Highway:	STATE ROUTE 138
From/To:	230th St to 190th St
Jurisdiction:	CALTRANS
Analysis Year:	2040 Alt 2
Project ID:	STATE ROUTE 138 HCS ANALYSIS

FREE-FLOW SPEED

Direction	1		2	
Lane width	12.0	ft	12.0	ft
Lateral clearance:				
Right edge	6.0	ft	6.0	ft
Left edge	6.0	ft	6.0	ft
Total lateral clearance	12.0	ft	12.0	ft
Access points per mile	1		1	
Median type	Divided		Divided	
Free-flow speed:	Base		Base	
FFS or BFFS	60.0	mph	60.0	mph
Lane width adjustment, FLW	0.0	mph	0.0	mph
Lateral clearance adjustment, FLC	0.0	mph	0.0	mph
Median type adjustment, FM	0.0	mph	0.0	mph
Access points adjustment, FA	0.3	mph	0.3	mph
Free-flow speed	59.8	mph	59.8	mph

VOLUME

Direction	1		2	
Volume, V	1660	vph	2060	vph
Peak-hour factor, PHF	0.88		0.88	
Peak 15-minute volume, v15	472		585	
Trucks and buses	5	%	5	%
Recreational vehicles	0	%	0	%
Terrain type	Level		Level	
Grade	0.00	%	0.00	%
Segment length	0.00	mi	0.00	mi
Number of lanes	2		2	
Driver population adjustment, fP	1.00		1.00	
Trucks and buses PCE, ET	1.5		1.5	
Recreational vehicles PCE, ER	1.2		1.2	
Heavy vehicle adjustment, fHV	0.976		0.976	
Flow rate, vp	966	pcphpl	1199	pcphpl

RESULTS

Direction	1		2	
Flow rate, vp	966	pcphpl	1199	pcphpl
Free-flow speed, FFS	59.8	mph	59.8	mph
Avg. passenger-car travel speed, S	60.0	mph	60.0	mph
Level of service, LOS	B		C	
Density, D	16.1	pc/mi/ln	20.0	pc/mi/ln

Bicycle Level of Service

Posted speed limit, Sp		55
Percent of segment with occupied on-highway parking	0	0
Pavement rating, P	3	3
Flow rate in outside lane, vOL	943.2	1170.5
Effective width of outside lane, We	24.00	24.00
Effective speed factor, St	4.79	4.79
Bicycle LOS Score, BLOS	3.64	3.75
Bicycle LOS	D	D

Overall results are not computed when free-flow speed is less than 45 mph.

Phone: Fax:
E-mail:

OPERATIONAL ANALYSIS

Analyst:	ACS
Agency/Co:	Fehr and Peers
Date:	8/21/2014
Analysis Period:	AM Peak Hour
Highway:	STATE ROUTE 138
From/To:	190th St to 130th St
Jurisdiction:	CALTRANS
Analysis Year:	2040 Alt 2
Project ID:	STATE ROUTE 138 HCS ANALYSIS

FREE-FLOW SPEED

Direction	1		2	
Lane width	12.0	ft	12.0	ft
Lateral clearance:				
Right edge	6.0	ft	6.0	ft
Left edge	6.0	ft	6.0	ft
Total lateral clearance	12.0	ft	12.0	ft
Access points per mile	1		1	
Median type	Divided		Divided	
Free-flow speed:	Base		Base	
FFS or BFFS	60.0	mph	60.0	mph
Lane width adjustment, FLW	0.0	mph	0.0	mph
Lateral clearance adjustment, FLC	0.0	mph	0.0	mph
Median type adjustment, FM	0.0	mph	0.0	mph
Access points adjustment, FA	0.3	mph	0.3	mph
Free-flow speed	59.8	mph	59.8	mph

VOLUME

Direction	1		2	
Volume, V	1210	vph	1860	vph
Peak-hour factor, PHF	0.72		0.72	
Peak 15-minute volume, v15	420		646	
Trucks and buses	5	%	5	%
Recreational vehicles	0	%	0	%
Terrain type	Level		Level	
Grade	0.00	%	0.00	%
Segment length	0.00	mi	0.00	mi
Number of lanes	2		2	
Driver population adjustment, fP	1.00		1.00	
Trucks and buses PCE, ET	1.5		1.5	
Recreational vehicles PCE, ER	1.2		1.2	
Heavy vehicle adjustment, fHV	0.976		0.976	
Flow rate, vp	861	pcphpl	1323	pcphpl

RESULTS

Direction	1		2	
Flow rate, vp	861	pcphpl	1323	pcphpl
Free-flow speed, FFS	59.8	mph	59.8	mph
Avg. passenger-car travel speed, S	60.0	mph	60.0	mph
Level of service, LOS	B		C	
Density, D	14.4	pc/mi/ln	22.0	pc/mi/ln

Bicycle Level of Service

Posted speed limit, Sp		55
Percent of segment with occupied on-highway parking	0	0
Pavement rating, P	3	3
Flow rate in outside lane, vOL	840.3	1291.7
Effective width of outside lane, We	24.00	24.00
Effective speed factor, St	4.79	4.79
Bicycle LOS Score, BLOS	3.59	3.80
Bicycle LOS	D	D

Overall results are not computed when free-flow speed is less than 45 mph.

Phone: Fax:
E-mail:

OPERATIONAL ANALYSIS

Analyst:	ACS
Agency/Co:	Fehr and Peers
Date:	8/21/2014
Analysis Period:	PM Peak Hour
Highway:	STATE ROUTE 138
From/To:	190th St to 130th St
Jurisdiction:	CALTRANS
Analysis Year:	2040 Alt 2
Project ID:	STATE ROUTE 138 HCS ANALYSIS

FREE-FLOW SPEED

Direction	1		2	
Lane width	12.0	ft	12.0	ft
Lateral clearance:				
Right edge	6.0	ft	6.0	ft
Left edge	6.0	ft	6.0	ft
Total lateral clearance	12.0	ft	12.0	ft
Access points per mile	1		1	
Median type	Divided		Divided	
Free-flow speed:	Base		Base	
FFS or BFFS	60.0	mph	60.0	mph
Lane width adjustment, FLW	0.0	mph	0.0	mph
Lateral clearance adjustment, FLC	0.0	mph	0.0	mph
Median type adjustment, FM	0.0	mph	0.0	mph
Access points adjustment, FA	0.3	mph	0.3	mph
Free-flow speed	59.8	mph	59.8	mph

VOLUME

Direction	1		2	
Volume, V	1390	vph	1970	vph
Peak-hour factor, PHF	0.89		0.89	
Peak 15-minute volume, v15	390		553	
Trucks and buses	5	%	5	%
Recreational vehicles	0	%	0	%
Terrain type	Level		Level	
Grade	0.00	%	0.00	%
Segment length	0.00	mi	0.00	mi
Number of lanes	2		2	
Driver population adjustment, fP	1.00		1.00	
Trucks and buses PCE, ET	1.5		1.5	
Recreational vehicles PCE, ER	1.2		1.2	
Heavy vehicle adjustment, fHV	0.976		0.976	
Flow rate, vp	800	pcphpl	1134	pcphpl

RESULTS

Direction	1		2	
Flow rate, vp	800	pcphpl	1134	pcphpl
Free-flow speed, FFS	59.8	mph	59.8	mph
Avg. passenger-car travel speed, S	60.0	mph	60.0	mph
Level of service, LOS	B		C	
Density, D	13.3	pc/mi/ln	18.9	pc/mi/ln

Bicycle Level of Service

Posted speed limit, Sp		55
Percent of segment with occupied on-highway parking	0	0
Pavement rating, P	3	3
Flow rate in outside lane, vOL	780.9	1106.7
Effective width of outside lane, We	24.00	24.00
Effective speed factor, St	4.79	4.79
Bicycle LOS Score, BLOS	3.55	3.73
Bicycle LOS	D	D

Overall results are not computed when free-flow speed is less than 45 mph.

Phone: Fax:
E-mail:

OPERATIONAL ANALYSIS

Analyst:	ACS
Agency/Co:	Fehr and Peers
Date:	8/21/2014
Analysis Period:	AM Peak Hour
Highway:	STATE ROUTE 138
From/To:	130th St to 80th St
Jurisdiction:	CALTRANS
Analysis Year:	2040 Alt 2
Project ID:	STATE ROUTE 138 HCS ANALYSIS

FREE-FLOW SPEED

Direction	1		2	
Lane width	12.0	ft	12.0	ft
Lateral clearance:				
Right edge	6.0	ft	6.0	ft
Left edge	6.0	ft	6.0	ft
Total lateral clearance	12.0	ft	12.0	ft
Access points per mile	1		1	
Median type	Divided		Divided	
Free-flow speed:	Base		Base	
FFS or BFFS	60.0	mph	60.0	mph
Lane width adjustment, FLW	0.0	mph	0.0	mph
Lateral clearance adjustment, FLC	0.0	mph	0.0	mph
Median type adjustment, FM	0.0	mph	0.0	mph
Access points adjustment, FA	0.3	mph	0.3	mph
Free-flow speed	59.8	mph	59.8	mph

VOLUME

Direction	1		2	
Volume, V	1310	vph	1630	vph
Peak-hour factor, PHF	0.85		0.85	
Peak 15-minute volume, v15	385		479	
Trucks and buses	5	%	5	%
Recreational vehicles	0	%	0	%
Terrain type	Level		Level	
Grade	0.00	%	0.00	%
Segment length	0.00	mi	0.00	mi
Number of lanes	2		2	
Driver population adjustment, fP	1.00		1.00	
Trucks and buses PCE, ET	1.5		1.5	
Recreational vehicles PCE, ER	1.2		1.2	
Heavy vehicle adjustment, fHV	0.976		0.976	
Flow rate, vp	789	pcphpl	982	pcphpl

RESULTS

Direction	1		2	
Flow rate, vp	789	pcphpl	982	pcphpl
Free-flow speed, FFS	59.8	mph	59.8	mph
Avg. passenger-car travel speed, S	60.0	mph	60.0	mph
Level of service, LOS	B		B	
Density, D	13.1	pc/mi/ln	16.4	pc/mi/ln

Bicycle Level of Service

Posted speed limit, Sp		55
Percent of segment with occupied on-highway parking	0	0
Pavement rating, P	3	3
Flow rate in outside lane, vOL	770.6	958.8
Effective width of outside lane, We	24.00	24.00
Effective speed factor, St	4.79	4.79
Bicycle LOS Score, BLOS	3.54	3.65
Bicycle LOS	D	D

Overall results are not computed when free-flow speed is less than 45 mph.

Phone: Fax:
E-mail:

OPERATIONAL ANALYSIS

Analyst:	ACS
Agency/Co:	Fehr and Peers
Date:	8/21/2014
Analysis Period:	PM Peak Hour
Highway:	STATE ROUTE 138
From/To:	130th St to 80th St
Jurisdiction:	CALTRANS
Analysis Year:	2040 Alt 2
Project ID:	STATE ROUTE 138 HCS ANALYSIS

FREE-FLOW SPEED

Direction	1		2	
Lane width	12.0	ft	12.0	ft
Lateral clearance:				
Right edge	6.0	ft	6.0	ft
Left edge	6.0	ft	6.0	ft
Total lateral clearance	12.0	ft	12.0	ft
Access points per mile	1		1	
Median type	Divided		Divided	
Free-flow speed:	Base		Base	
FFS or BFFS	60.0	mph	60.0	mph
Lane width adjustment, FLW	0.0	mph	0.0	mph
Lateral clearance adjustment, FLC	0.0	mph	0.0	mph
Median type adjustment, FM	0.0	mph	0.0	mph
Access points adjustment, FA	0.3	mph	0.3	mph
Free-flow speed	59.8	mph	59.8	mph

VOLUME

Direction	1		2	
Volume, V	1300	vph	1740	vph
Peak-hour factor, PHF	0.91		0.91	
Peak 15-minute volume, v15	357		478	
Trucks and buses	5	%	5	%
Recreational vehicles	0	%	0	%
Terrain type	Level		Level	
Grade	0.00	%	0.00	%
Segment length	0.00	mi	0.00	mi
Number of lanes	2		2	
Driver population adjustment, fP	1.00		1.00	
Trucks and buses PCE, ET	1.5		1.5	
Recreational vehicles PCE, ER	1.2		1.2	
Heavy vehicle adjustment, fHV	0.976		0.976	
Flow rate, vp	732	pcphpl	979	pcphpl

RESULTS

Direction	1		2	
Flow rate, vp	732	pcphpl	979	pcphpl
Free-flow speed, FFS	59.8	mph	59.8	mph
Avg. passenger-car travel speed, S	60.0	mph	60.0	mph
Level of service, LOS	B		B	
Density, D	12.2	pc/mi/ln	16.3	pc/mi/ln

Bicycle Level of Service

Posted speed limit, Sp		55
Percent of segment with occupied on-highway parking	0	0
Pavement rating, P	3	3
Flow rate in outside lane, vOL	714.3	956.0
Effective width of outside lane, We	24.00	24.00
Effective speed factor, St	4.79	4.79
Bicycle LOS Score, BLOS	3.50	3.65
Bicycle LOS	D	D

Overall results are not computed when free-flow speed is less than 45 mph.

Phone: Fax:
E-mail:

OPERATIONAL ANALYSIS

Analyst:	ACS
Agency/Co:	Fehr and Peers
Date:	8/21/2014
Analysis Period:	AM Peak Hour
Highway:	STATE ROUTE 138
From/To:	80th St to 30th St
Jurisdiction:	CALTRANS
Analysis Year:	2040 Alt 2
Project ID:	STATE ROUTE 138 HCS ANALYSIS

FREE-FLOW SPEED

Direction	1		2	
Lane width	12.0	ft	12.0	ft
Lateral clearance:				
Right edge	6.0	ft	6.0	ft
Left edge	6.0	ft	6.0	ft
Total lateral clearance	12.0	ft	12.0	ft
Access points per mile	1		1	
Median type	Divided		Divided	
Free-flow speed:	Base		Base	
FFS or BFFS	60.0	mph	60.0	mph
Lane width adjustment, FLW	0.0	mph	0.0	mph
Lateral clearance adjustment, FLC	0.0	mph	0.0	mph
Median type adjustment, FM	0.0	mph	0.0	mph
Access points adjustment, FA	0.3	mph	0.3	mph
Free-flow speed	59.8	mph	59.8	mph

VOLUME

Direction	1		2	
Volume, V	1120	vph	1570	vph
Peak-hour factor, PHF	0.94		0.94	
Peak 15-minute volume, v15	298		418	
Trucks and buses	5	%	5	%
Recreational vehicles	0	%	0	%
Terrain type	Level		Level	
Grade	0.00	%	0.00	%
Segment length	0.00	mi	0.00	mi
Number of lanes	2		2	
Driver population adjustment, fP	1.00		1.00	
Trucks and buses PCE, ET	1.5		1.5	
Recreational vehicles PCE, ER	1.2		1.2	
Heavy vehicle adjustment, fHV	0.976		0.976	
Flow rate, vp	610	pcphpl	855	pcphpl

RESULTS

Direction	1		2	
Flow rate, vp	610	pcphpl	855	pcphpl
Free-flow speed, FFS	59.8	mph	59.8	mph
Avg. passenger-car travel speed, S	60.0	mph	60.0	mph
Level of service, LOS	A		B	
Density, D	10.2	pc/mi/ln	14.3	pc/mi/ln

Bicycle Level of Service

Posted speed limit, Sp		55
Percent of segment with occupied on-highway parking	0	0
Pavement rating, P	3	3
Flow rate in outside lane, vOL	595.7	835.1
Effective width of outside lane, We	24.00	24.00
Effective speed factor, St	4.79	4.79
Bicycle LOS Score, BLOS	3.41	3.58
Bicycle LOS	C	D

Overall results are not computed when free-flow speed is less than 45 mph.

Phone: Fax:
E-mail:

OPERATIONAL ANALYSIS

Analyst:	ACS
Agency/Co:	Fehr and Peers
Date:	8/21/2014
Analysis Period:	PM Peak Hour
Highway:	STATE ROUTE 138
From/To:	80th St to 30th St
Jurisdiction:	CALTRANS
Analysis Year:	2040 Alt 2
Project ID:	STATE ROUTE 138 HCS ANALYSIS

FREE-FLOW SPEED

Direction	1		2	
Lane width	12.0	ft	12.0	ft
Lateral clearance:				
Right edge	6.0	ft	6.0	ft
Left edge	6.0	ft	6.0	ft
Total lateral clearance	12.0	ft	12.0	ft
Access points per mile	1		1	
Median type	Divided		Divided	
Free-flow speed:	Base		Base	
FFS or BFFS	60.0	mph	60.0	mph
Lane width adjustment, FLW	0.0	mph	0.0	mph
Lateral clearance adjustment, FLC	0.0	mph	0.0	mph
Median type adjustment, FM	0.0	mph	0.0	mph
Access points adjustment, FA	0.3	mph	0.3	mph
Free-flow speed	59.8	mph	59.8	mph

VOLUME

Direction	1		2	
Volume, V	1200	vph	1770	vph
Peak-hour factor, PHF	0.94		0.94	
Peak 15-minute volume, v15	319		471	
Trucks and buses	5	%	5	%
Recreational vehicles	0	%	0	%
Terrain type	Level		Level	
Grade	0.00	%	0.00	%
Segment length	0.00	mi	0.00	mi
Number of lanes	2		2	
Driver population adjustment, fP	1.00		1.00	
Trucks and buses PCE, ET	1.5		1.5	
Recreational vehicles PCE, ER	1.2		1.2	
Heavy vehicle adjustment, fHV	0.976		0.976	
Flow rate, vp	654	pcphpl	965	pcphpl

RESULTS

Direction	1		2	
Flow rate, vp	654	pcphpl	965	pcphpl
Free-flow speed, FFS	59.8	mph	59.8	mph
Avg. passenger-car travel speed, S	60.0	mph	60.0	mph
Level of service, LOS	A		B	
Density, D	10.9	pc/mi/ln	16.1	pc/mi/ln

Bicycle Level of Service

Posted speed limit, Sp		55
Percent of segment with occupied on-highway parking	0	0
Pavement rating, P	3	3
Flow rate in outside lane, vOL	638.3	941.5
Effective width of outside lane, We	24.00	24.00
Effective speed factor, St	4.79	4.79
Bicycle LOS Score, BLOS	3.45	3.64
Bicycle LOS	C	D

Overall results are not computed when free-flow speed is less than 45 mph.

Phone: Fax:
E-mail:

OPERATIONAL ANALYSIS

Analyst:	ACS
Agency/Co:	Fehr and Peers
Date:	8/21/2014
Analysis Period:	AM Peak Hour
Highway:	STATE ROUTE 138
From/To:	30th St to Route 14
Jurisdiction:	CALTRANS
Analysis Year:	2040 Alt 2
Project ID:	STATE ROUTE 138 HCS ANALYSIS

FREE-FLOW SPEED

Direction	1		2	
Lane width	12.0	ft	12.0	ft
Lateral clearance:				
Right edge	6.0	ft	6.0	ft
Left edge	6.0	ft	6.0	ft
Total lateral clearance	12.0	ft	12.0	ft
Access points per mile	1		1	
Median type	Divided		Divided	
Free-flow speed:	Base		Base	
FFS or BFFS	60.0	mph	60.0	mph
Lane width adjustment, FLW	0.0	mph	0.0	mph
Lateral clearance adjustment, FLC	0.0	mph	0.0	mph
Median type adjustment, FM	0.0	mph	0.0	mph
Access points adjustment, FA	0.3	mph	0.3	mph
Free-flow speed	59.8	mph	59.8	mph

VOLUME

Direction	1		2	
Volume, V	1110	vph	1420	vph
Peak-hour factor, PHF	0.89		0.89	
Peak 15-minute volume, v15	312		399	
Trucks and buses	5	%	5	%
Recreational vehicles	0	%	0	%
Terrain type	Level		Level	
Grade	0.00	%	0.00	%
Segment length	0.00	mi	0.00	mi
Number of lanes	2		2	
Driver population adjustment, fP	1.00		1.00	
Trucks and buses PCE, ET	1.5		1.5	
Recreational vehicles PCE, ER	1.2		1.2	
Heavy vehicle adjustment, fHV	0.976		0.976	
Flow rate, vp	639	pcphpl	817	pcphpl

RESULTS

Direction	1		2	
Flow rate, vp	639	pcphpl	817	pcphpl
Free-flow speed, FFS	59.8	mph	59.8	mph
Avg. passenger-car travel speed, S	60.0	mph	60.0	mph
Level of service, LOS	A		B	
Density, D	10.6	pc/mi/ln	13.6	pc/mi/ln

Bicycle Level of Service

Posted speed limit, Sp		55
Percent of segment with occupied on-highway parking	0	0
Pavement rating, P	3	3
Flow rate in outside lane, vOL	623.6	797.8
Effective width of outside lane, We	24.00	24.00
Effective speed factor, St	4.79	4.79
Bicycle LOS Score, BLOS	3.44	3.56
Bicycle LOS	C	D

Overall results are not computed when free-flow speed is less than 45 mph.

Phone: Fax:
E-mail:

OPERATIONAL ANALYSIS

Analyst:	ACS
Agency/Co:	Fehr and Peers
Date:	8/21/2014
Analysis Period:	PM Peak Hour
Highway:	STATE ROUTE 138
From/To:	30th St to Route 14
Jurisdiction:	CALTRANS
Analysis Year:	2040 Alt 2
Project ID:	STATE ROUTE 138 HCS ANALYSIS

FREE-FLOW SPEED

Direction	1		2	
Lane width	12.0	ft	12.0	ft
Lateral clearance:				
Right edge	6.0	ft	6.0	ft
Left edge	6.0	ft	6.0	ft
Total lateral clearance	12.0	ft	12.0	ft
Access points per mile	1		1	
Median type	Divided		Divided	
Free-flow speed:	Base		Base	
FFS or BFFS	60.0	mph	60.0	mph
Lane width adjustment, FLW	0.0	mph	0.0	mph
Lateral clearance adjustment, FLC	0.0	mph	0.0	mph
Median type adjustment, FM	0.0	mph	0.0	mph
Access points adjustment, FA	0.3	mph	0.3	mph
Free-flow speed	59.8	mph	59.8	mph

VOLUME

Direction	1		2	
Volume, V	1100	vph	1570	vph
Peak-hour factor, PHF	0.94		0.94	
Peak 15-minute volume, v15	293		418	
Trucks and buses	5	%	5	%
Recreational vehicles	0	%	0	%
Terrain type	Level		Level	
Grade	0.00	%	0.00	%
Segment length	0.00	mi	0.00	mi
Number of lanes	2		2	
Driver population adjustment, fP	1.00		1.00	
Trucks and buses PCE, ET	1.5		1.5	
Recreational vehicles PCE, ER	1.2		1.2	
Heavy vehicle adjustment, fHV	0.976		0.976	
Flow rate, vp	599	pcphpl	855	pcphpl

RESULTS

Direction	1		2	
Flow rate, vp	599	pcphpl	855	pcphpl
Free-flow speed, FFS	59.8	mph	59.8	mph
Avg. passenger-car travel speed, S	60.0	mph	60.0	mph
Level of service, LOS	A		B	
Density, D	10.0	pc/mi/ln	14.3	pc/mi/ln

Bicycle Level of Service

Posted speed limit, Sp		55
Percent of segment with occupied on-highway parking	0	0
Pavement rating, P	3	3
Flow rate in outside lane, vOL	585.1	835.1
Effective width of outside lane, We	24.00	24.00
Effective speed factor, St	4.79	4.79
Bicycle LOS Score, BLOS	3.40	3.58
Bicycle LOS	C	D

Overall results are not computed when free-flow speed is less than 45 mph.

HCS 2010: Freeway Weaving Release 6.2

Phone: Fax:
E-mail:

Operational Analysis

Analyst:	FR
Agency/Co.:	FEHR AND PEERS
Date Performed:	7/24/2014
Analysis Time Period:	AM
Freeway/Dir of Travel:	SR138 EB
Weaving Location:	I5 TO GORMAN POST
Analysis Year:	2040 ALT1
Description:	

Inputs

Segment Type	Freeway	
Weaving configuration	One-Sided	
Number of lanes, N	4	ln
Weaving segment length, LS	1700	ft
Freeway free-flow speed, FFS	70	mi/h
Minimum segment speed, SMIN	25	mi/h
Freeway maximum capacity, cIFL	2100*	pc/h/ln
Terrain type	Level	
Grade	0.00	%
Length	0.00	mi

Conversion to pc/h Under Base Conditions

	Volume Components				
	VFF	VRF	VFR	VRR	
Volume, V	433	1065	121	84	veh/h
Peak hour factor, PHF	0.87	0.87	0.87	0.87	
Peak 15-min volume, v15	124	306	35	24	
Trucks and buses	10	10	2	2	%
Recreational vehicles	0	0	0	0	%
Trucks and buses PCE, ET	1.5	1.5	1.5	1.5	
Recreational vehicle PCE, ER	1.2	1.2	1.2	1.2	
Heavy vehicle adjustment, fHV	0.952	0.952	0.990	0.990	
Driver population adjustment, fP	1.00	1.00	1.00	1.00	
Flow rate, v	523	1285	140	98	pc/h

Volume ratio, VR 0.696

Configuration Characteristics

Number of maneuver lanes, NWL	2	ln
Interchange density, ID	2.0	int/mi
Minimum RF lane changes, LCRF	0	lc/pc
Minimum FR lane changes, LCFR	2	lc/pc
Minimum RR lane changes, LCRR		lc/pc
Minimum weaving lane changes, LCMIN	280	lc/h
Weaving lane changes, LCW	842	lc/h
Non-weaving vehicle index, INW	211	
Non-weaving lane change, LCNW	279	lc/h
Total lane changes, LCALL	1121	lc/h

Weaving and Non-Weaving Speeds

Weaving intensity factor, W 0.163

Average weaving speed, SW	63.7	mi/h
Average non-weaving speed, SNW	65.5	mi/h

Weaving Segment Speed, Density, Level of Service and Capacity

Weaving segment speed, S	64.2	mi/h
Weaving segment density, D	8.0	pc/mi/ln
Level of service, LOS	A	
Weaving segment v/c ratio	0.594	
Weaving segment flow rate, v	2046	pc/h
Weaving segment capacity, cW	3282	veh/h

Limitations on Weaving Segments

If limit reached, see note.

	Minimum	Maximum	Actual	Note
Weaving length (ft)	300	10212	1700	a,b
		Maximum	Analyzed	
Density-based capacty, cIWL (pc/h/ln)		2100*	1449	c
		Maximum	Analyzed	
v/c ratio		1.00	0.594	d

Notes:

a. In weaving segments shorter than 300 ft, weaving vehicles are assumed to make only necessary lane changes.

b. Weaving segments longer than the calculated maximum length should be treated as isolated merge and diverge areas using the procedures of Chapter 13, "Freeway Merge and Diverge Segments."

c. The density-based capacity exceeds the capacity of a basic freeway segment, under equivalent ideal conditions.

d. Volumes exceed the weaving segment capacity. The level of service is F.

HCS 2010: Freeway Weaving Release 6.2

Phone: Fax:
E-mail:

Operational Analysis

Analyst:	FR
Agency/Co.:	FEHR AND PEERS
Date Performed:	7/24/2014
Analysis Time Period:	PM
Freeway/Dir of Travel:	SR138 EB
Weaving Location:	I5 TO GORMAN POST
Analysis Year:	2040 ALT1
Description:	

Inputs

Segment Type	Freeway	
Weaving configuration	One-Sided	
Number of lanes, N	4	ln
Weaving segment length, LS	1700	ft
Freeway free-flow speed, FFS	70	mi/h
Minimum segment speed, SMIN	25	mi/h
Freeway maximum capacity, cIFL	2100*	pc/h/ln
Terrain type	Level	
Grade	0.00	%
Length	0.00	mi

Conversion to pc/h Under Base Conditions

	Volume Components				
	VFF	VRF	VFR	VRR	
Volume, V	1535	1055	443	66	veh/h
Peak hour factor, PHF	0.87	0.87	0.87	0.87	
Peak 15-min volume, v15	441	303	127	19	
Trucks and buses	10	10	2	2	%
Recreational vehicles	0	0	0	0	%
Trucks and buses PCE, ET	1.5	1.5	1.5	1.5	
Recreational vehicle PCE, ER	1.2	1.2	1.2	1.2	
Heavy vehicle adjustment, fHV	0.952	0.952	0.990	0.990	
Driver population adjustment, fP	1.00	1.00	1.00	1.00	
Flow rate, v	1853	1273	514	77	pc/h

Volume ratio, VR 0.481

Configuration Characteristics

Number of maneuver lanes, NWL	2	ln
Interchange density, ID	2.0	int/mi
Minimum RF lane changes, LCRF	0	lc/pc
Minimum FR lane changes, LCFR	2	lc/pc
Minimum RR lane changes, LCRR		lc/pc
Minimum weaving lane changes, LCMIN	1028	lc/h
Weaving lane changes, LCW	1590	lc/h
Non-weaving vehicle index, INW	656	
Non-weaving lane change, LCNW	549	lc/h
Total lane changes, LCALL	2139	lc/h

Weaving and Non-Weaving Speeds

Weaving intensity factor, W 0.271

Average weaving speed, SW	60.4	mi/h
Average non-weaving speed, SNW	58.1	mi/h

Weaving Segment Speed, Density, Level of Service and Capacity

Weaving segment speed, S	59.2	mi/h
Weaving segment density, D	15.7	pc/mi/ln
Level of service, LOS	B	
Weaving segment v/c ratio	0.745	
Weaving segment flow rate, v	3717	pc/h
Weaving segment capacity, cW	4754	veh/h

Limitations on Weaving Segments

If limit reached, see note.

	Minimum	Maximum	Actual	Note
Weaving length (ft)	300	7602	1700	a,b
		Maximum	Analyzed	
Density-based capacty, cIWL (pc/h/ln)		2100*	1648	c
		Maximum	Analyzed	
v/c ratio		1.00	0.745	d

Notes:

a. In weaving segments shorter than 300 ft, weaving vehicles are assumed to make only necessary lane changes.

b. Weaving segments longer than the calculated maximum length should be treated as isolated merge and diverge areas using the procedures of Chapter 13, "Freeway Merge and Diverge Segments."

c. The density-based capacity exceeds the capacity of a basic freeway segment, under equivalent ideal conditions.

d. Volumes exceed the weaving segment capacity. The level of service is F.

HCS 2010: Freeway Weaving Release 6.2

Phone: Fax:
E-mail:

Operational Analysis

Analyst:	FR
Agency/Co.:	FEHR AND PEERS
Date Performed:	7/24/2014
Analysis Time Period:	AM
Freeway/Dir of Travel:	SR138 WB
Weaving Location:	I5 TO GORMAN POST
Analysis Year:	2040 ALT1
Description:	

Inputs

Segment Type	Freeway	
Weaving configuration	One-Sided	
Number of lanes, N	3	ln
Weaving segment length, LS	2500	ft
Freeway free-flow speed, FFS	70	mi/h
Minimum segment speed, SMIN	25	mi/h
Freeway maximum capacity, cIFL	2100*	pc/h/ln
Terrain type	Level	
Grade	0.00	%
Length	0.00	mi

Conversion to pc/h Under Base Conditions

	Volume Components				
	VFF	VRF	VFR	VRR	
Volume, V	1599	499	1060	36	veh/h
Peak hour factor, PHF	0.87	0.87	0.87	0.87	
Peak 15-min volume, v15	459	143	305	10	
Trucks and buses	10	2	10	2	%
Recreational vehicles	0	0	0	0	%
Trucks and buses PCE, ET	1.5	1.5	1.5	1.5	
Recreational vehicle PCE, ER	1.2	1.2	1.2	1.2	
Heavy vehicle adjustment, fHV	0.952	0.990	0.952	0.990	
Driver population adjustment, fP	1.00	1.00	1.00	1.00	
Flow rate, v	1930	579	1279	42	pc/h

Volume ratio, VR 0.485

Configuration Characteristics

Number of maneuver lanes, NWL	3	ln
Interchange density, ID	2.0	int/mi
Minimum RF lane changes, LCRF	1	lc/pc
Minimum FR lane changes, LCFR	0	lc/pc
Minimum RR lane changes, LCRR		lc/pc
Minimum weaving lane changes, LCMIN	579	lc/h
Weaving lane changes, LCW	975	lc/h
Non-weaving vehicle index, INW	986	
Non-weaving lane change, LCNW	1183	lc/h
Total lane changes, LCALL	2158	lc/h

Weaving and Non-Weaving Speeds

Weaving intensity factor, W 0.201

Average weaving speed, SW	62.5	mi/h
Average non-weaving speed, SNW	59.7	mi/h

Weaving Segment Speed, Density, Level of Service and Capacity

Weaving segment speed, S	61.0	mi/h
Weaving segment density, D	20.9	pc/mi/ln
Level of service, LOS	C	
Weaving segment v/c ratio	0.699	
Weaving segment flow rate, v	3830	pc/h
Weaving segment capacity, cW	5217	veh/h

Limitations on Weaving Segments

If limit reached, see note.

	Minimum	Maximum	Actual	Note
Weaving length (ft)	300	6087	2500	a,b
		Maximum	Analyzed	
Density-based capacty, cIWL (pc/h/ln)		2100*	1826	c
		Maximum	Analyzed	
v/c ratio		1.00	0.699	d

Notes:

a. In weaving segments shorter than 300 ft, weaving vehicles are assumed to make only necessary lane changes.

b. Weaving segments longer than the calculated maximum length should be treated as isolated merge and diverge areas using the procedures of Chapter 13, "Freeway Merge and Diverge Segments."

c. The density-based capacity exceeds the capacity of a basic freeway segment, under equivalent ideal conditions.

d. Volumes exceed the weaving segment capacity. The level of service is F.

HCS 2010: Freeway Weaving Release 6.2

Phone: Fax:
E-mail:

Operational Analysis

Analyst:	FR
Agency/Co.:	FEHR AND PEERS
Date Performed:	7/24/2014
Analysis Time Period:	PM
Freeway/Dir of Travel:	SR138 WB
Weaving Location:	I5 TO GORMAN POST
Analysis Year:	2040 ALT1
Description:	

Inputs

Segment Type	Freeway	
Weaving configuration	One-Sided	
Number of lanes, N	3	ln
Weaving segment length, LS	2500	ft
Freeway free-flow speed, FFS	70	mi/h
Minimum segment speed, SMIN	25	mi/h
Freeway maximum capacity, cIFL	2100*	pc/h/ln
Terrain type	Level	
Grade	0.00	%
Length	0.00	mi

Conversion to pc/h Under Base Conditions

	Volume Components				
	VFF	VRF	VFR	VRR	
Volume, V	743	186	1226	50	veh/h
Peak hour factor, PHF	0.87	0.87	0.87	0.87	
Peak 15-min volume, v15	214	53	352	14	
Trucks and buses	10	2	10	2	%
Recreational vehicles	0	0	0	0	%
Trucks and buses PCE, ET	1.5	1.5	1.5	1.5	
Recreational vehicle PCE, ER	1.2	1.2	1.2	1.2	
Heavy vehicle adjustment, fHV	0.952	0.990	0.952	0.990	
Driver population adjustment, fP	1.00	1.00	1.00	1.00	
Flow rate, v	897	216	1480	58	pc/h

Volume ratio, VR 0.640

Configuration Characteristics

Number of maneuver lanes, NWL	3	ln
Interchange density, ID	2.0	int/mi
Minimum RF lane changes, LCRF	1	lc/pc
Minimum FR lane changes, LCFR	0	lc/pc
Minimum RR lane changes, LCRR		lc/pc
Minimum weaving lane changes, LCMIN	216	lc/h
Weaving lane changes, LCW	612	lc/h
Non-weaving vehicle index, INW	478	
Non-weaving lane change, LCNW	974	lc/h
Total lane changes, LCALL	1586	lc/h

Weaving and Non-Weaving Speeds

Weaving intensity factor, W 0.158

Average weaving speed, SW	63.9	mi/h
Average non-weaving speed, SNW	64.2	mi/h

Weaving Segment Speed, Density, Level of Service and Capacity

Weaving segment speed, S	64.0	mi/h
Weaving segment density, D	13.8	pc/mi/ln
Level of service, LOS	B	
Weaving segment v/c ratio	0.525	
Weaving segment flow rate, v	2651	pc/h
Weaving segment capacity, cW	4811	veh/h

Limitations on Weaving Segments

If limit reached, see note.

	Minimum	Maximum	Actual	Note
Weaving length (ft)	300	7939	2500	a,b
		Maximum	Analyzed	
Density-based capacty, cIWL (pc/h/ln)		2100*	1684	c
		Maximum	Analyzed	
v/c ratio		1.00	0.525	d

Notes:

a. In weaving segments shorter than 300 ft, weaving vehicles are assumed to make only necessary lane changes.

b. Weaving segments longer than the calculated maximum length should be treated as isolated merge and diverge areas using the procedures of Chapter 13, "Freeway Merge and Diverge Segments."

c. The density-based capacity exceeds the capacity of a basic freeway segment, under equivalent ideal conditions.

d. Volumes exceed the weaving segment capacity. The level of service is F.

Appendix K
Intersection LOS Worksheets – 2040 Conditions

Intersection	
Int Delay, s/veh	1124.2

Movement	EBL	EBT	WBT	WBR	SBL	SBR
Vol, veh/h	160	980	1130	150	170	330
Conflicting Peds, #/hr	0	0	0	0	0	0
Sign Control	Free	Free	Free	Free	Stop	Stop
RT Channelized	-	None	-	None	-	None
Storage Length	105	-	-	-	0	-
Veh in Median Storage, #	-	0	0	-	0	-
Grade, %	-	0	0	-	0	-
Peak Hour Factor	87	87	87	87	87	87
Heavy Vehicles, %	35	35	41	41	2	2
Mvmt Flow	184	1126	1299	172	195	379

Major/Minor	Major1		Major2		Minor2	
Conflicting Flow All	1471	0	-	0	2316	736
Stage 1	-	-	-	-	1385	-
Stage 2	-	-	-	-	931	-
Critical Hdwy	4.8	-	-	-	6.84	6.94
Critical Hdwy Stg 1	-	-	-	-	5.84	-
Critical Hdwy Stg 2	-	-	-	-	5.84	-
Follow-up Hdwy	2.55	-	-	-	3.52	3.32
Pot Cap-1 Maneuver	320	-	-	-	~ 32	~ 361
Stage 1	-	-	-	-	197	-
Stage 2	-	-	-	-	344	-
Platoon blocked, %		-	-	-		
Mov Cap-1 Maneuver	320	-	-	-	~ 14	~ 361
Mov Cap-2 Maneuver	-	-	-	-	~ 14	-
Stage 1	-	-	-	-	197	-
Stage 2	-	-	-	-	~ 146	-

Approach	EB	WB	SB
HCM Control Delay, s	4.3	0	$ 6555.4
HCM LOS			F

Minor Lane/Major Mvmt	EBL	EBT	WBT	WBR	SBLn1
Capacity (veh/h)	320	-	-	-	38
HCM Lane V/C Ratio	0.575	-	-	-	15.124
HCM Control Delay (s)	30.4	-	-	-	$ 6555.4
HCM Lane LOS	D	-	-	-	F
HCM 95th %tile Q(veh)	3.4	-	-	-	70.2

Notes

~: Volume exceeds capacity $: Delay exceeds 300s +: Computation Not Defined *: All major volume in platoon

Intersection	
Int Delay, s/veh	8.5

Movement	EBT	EBR	WBL	WBT	NBL	NBR
Vol, veh/h	780	240	150	780	160	20
Conflicting Peds, #/hr	0	0	0	0	0	0
Sign Control	Free	Free	Free	Free	Stop	Stop
RT Channelized	-	None	-	None	-	None
Storage Length	-	-	-	-	0	-
Veh in Median Storage, #	0	-	-	0	0	-
Grade, %	0	-	-	0	0	-
Peak Hour Factor	79	79	79	79	79	79
Heavy Vehicles, %	35	35	41	41	2	2
Mvmt Flow	987	304	190	987	203	25

Major/Minor	Major1		Major2		Minor1	
Conflicting Flow All	0	0	1291	0	2506	1139
Stage 1	-	-	-	-	1139	-
Stage 2	-	-	-	-	1367	-
Critical Hdwy	-	-	4.51	-	6.42	6.22
Critical Hdwy Stg 1	-	-	-	-	5.42	-
Critical Hdwy Stg 2	-	-	-	-	5.42	-
Follow-up Hdwy	-	-	2.569	-	3.518	3.318
Pot Cap-1 Maneuver	-	-	426	-	~ 31	245
Stage 1	-	-	-	-	305	-
Stage 2	-	-	-	-	237	-
Platoon blocked, %	-	-		-		
Mov Cap-1 Maneuver	-	-	426	-	0	245
Mov Cap-2 Maneuver	-	-	-	-	0	-
Stage 1	-	-	-	-	305	-
Stage 2	-	-	-	-	~ 3	-

Approach	EB	WB	NB
HCM Control Delay, s	0	3.2	83.9
HCM LOS			F

Minor Lane/Major Mvmt	NBLn1	EBT	EBR	WBL	WBT
Capacity (veh/h)	245	-	-	426	-
HCM Lane V/C Ratio	0.93	-	-	0.446	-
HCM Control Delay (s)	83.9	-	-	20.1	0
HCM Lane LOS	F	-	-	C	A
HCM 95th %tile Q(veh)	8.2	-	-	2.2	-

Notes

~: Volume exceeds capacity $: Delay exceeds 300s +: Computation Not Defined *: All major volume in platoon

Intersection	
Int Delay, s/veh	4.3

Movement	EBL	EBT	WBT	WBR	SBL	SBR
Vol, veh/h	60	740	910	20	10	20
Conflicting Peds, #/hr	0	0	0	0	0	0
Sign Control	Free	Free	Free	Free	Stop	Stop
RT Channelized	-	None	-	None	-	None
Storage Length	-	-	-	-	0	-
Veh in Median Storage, #	-	0	0	-	0	-
Grade, %	-	0	0	-	0	-
Peak Hour Factor	72	72	72	72	72	72
Heavy Vehicles, %	30	30	38	38	2	2
Mvmt Flow	83	1028	1264	28	14	28

Major/Minor	Major1		Major2		Minor2	
Conflicting Flow All	1292	0	-	0	2472	1278
Stage 1	-	-	-	-	1278	-
Stage 2	-	-	-	-	1194	-
Critical Hdwy	4.4	-	-	-	6.42	6.22
Critical Hdwy Stg 1	-	-	-	-	5.42	-
Critical Hdwy Stg 2	-	-	-	-	5.42	-
Follow-up Hdwy	2.47	-	-	-	3.518	3.318
Pot Cap-1 Maneuver	453	-	-	-	33	203
Stage 1	-	-	-	-	262	-
Stage 2	-	-	-	-	287	-
Platoon blocked, %		-	-	-		
Mov Cap-1 Maneuver	453	-	-	-	19	203
Mov Cap-2 Maneuver	-	-	-	-	19	-
Stage 1	-	-	-	-	262	-
Stage 2	-	-	-	-	164	-

Approach	EB	WB	SB
HCM Control Delay, s	1.1	0	224
HCM LOS			F

Minor Lane/Major Mvmt	EBL	EBT	WBT	WBR	SBLn1
Capacity (veh/h)	453	-	-	-	48
HCM Lane V/C Ratio	0.184	-	-	-	0.868
HCM Control Delay (s)	14.7	0	-	-	224
HCM Lane LOS	B	A	-	-	F
HCM 95th %tile Q(veh)	0.7	-	-	-	3.6

Intersection	
Int Delay, s/veh	4.4

Movement	EBL	EBT	WBT	WBR	SBL	SBR
Vol, veh/h	230	530	520	10	10	150
Conflicting Peds, #/hr	0	0	0	0	0	0
Sign Control	Free	Free	Free	Free	Stop	Stop
RT Channelized	-	None	-	None	-	None
Storage Length	-	-	-	-	0	-
Veh in Median Storage, #	-	0	0	-	0	-
Grade, %	-	0	0	-	0	-
Peak Hour Factor	92	92	92	92	92	92
Heavy Vehicles, %	30	30	38	38	2	2
Mvmt Flow	250	576	565	11	11	163

Major/Minor	Major1		Major2		Minor2	
Conflicting Flow All	576	0	-	0	1647	571
Stage 1	-	-	-	-	571	-
Stage 2	-	-	-	-	1076	-
Critical Hdwy	4.4	-	-	-	6.42	6.22
Critical Hdwy Stg 1	-	-	-	-	5.42	-
Critical Hdwy Stg 2	-	-	-	-	5.42	-
Follow-up Hdwy	2.47	-	-	-	3.518	3.318
Pot Cap-1 Maneuver	873	-	-	-	109	520
Stage 1	-	-	-	-	565	-
Stage 2	-	-	-	-	327	-
Platoon blocked, %		-	-	-		
Mov Cap-1 Maneuver	873	-	-	-	63	520
Mov Cap-2 Maneuver	-	-	-	-	63	-
Stage 1	-	-	-	-	565	-
Stage 2	-	-	-	-	189	-

Approach	EB	WB	SB
HCM Control Delay, s	3.3	0	24.2
HCM LOS			C

Minor Lane/Major Mvmt	EBL	EBT	WBT	WBR	SBLn1
Capacity (veh/h)	873	-	-	-	358
HCM Lane V/C Ratio	0.286	-	-	-	0.486
HCM Control Delay (s)	10.8	0	-	-	24.2
HCM Lane LOS	B	A	-	-	C
HCM 95th %tile Q(veh)	1.2	-	-	-	2.6

Intersection	
Int Delay, s/veh	5

Movement	EBL	EBT	WBT	WBR	SBL	SBR
Vol, veh/h	150	380	250	10	10	290
Conflicting Peds, #/hr	0	0	0	0	0	0
Sign Control	Free	Free	Free	Free	Stop	Stop
RT Channelized	-	None	-	None	-	None
Storage Length	-	-	-	-	0	-
Veh in Median Storage, #	-	0	0	-	0	-
Grade, %	-	0	0	-	0	-
Peak Hour Factor	95	95	95	95	95	95
Heavy Vehicles, %	30	30	37	37	2	2
Mvmt Flow	158	400	263	11	11	305

Major/Minor	Major1		Major2		Minor2	
Conflicting Flow All	274	0	-	0	984	268
Stage 1	-	-	-	-	268	-
Stage 2	-	-	-	-	716	-
Critical Hdwy	4.4	-	-	-	6.42	6.22
Critical Hdwy Stg 1	-	-	-	-	5.42	-
Critical Hdwy Stg 2	-	-	-	-	5.42	-
Follow-up Hdwy	2.47	-	-	-	3.518	3.318
Pot Cap-1 Maneuver	1144	-	-	-	275	771
Stage 1	-	-	-	-	777	-
Stage 2	-	-	-	-	484	-
Platoon blocked, %		-	-	-		
Mov Cap-1 Maneuver	1144	-	-	-	226	771
Mov Cap-2 Maneuver	-	-	-	-	226	-
Stage 1	-	-	-	-	777	-
Stage 2	-	-	-	-	398	-

Approach	EB	WB	SB
HCM Control Delay, s	2.4	0	14
HCM LOS			B

Minor Lane/Major Mvmt	EBL	EBT	WBT	WBR	SBLn1
Capacity (veh/h)	1144	-	-	-	714
HCM Lane V/C Ratio	0.138	-	-	-	0.442
HCM Control Delay (s)	8.7	0	-	-	14
HCM Lane LOS	A	A	-	-	B
HCM 95th %tile Q(veh)	0.5	-	-	-	2.3

Intersection	
Int Delay, s/veh	4.8

Movement	EBL	EBT	WBT	WBR	SBL	SBR
Vol, veh/h	10	390	260	160	180	10
Conflicting Peds, #/hr	0	0	0	0	0	0
Sign Control	Free	Free	Free	Free	Stop	Stop
RT Channelized	-	None	-	None	-	None
Storage Length	-	-	-	-	0	-
Veh in Median Storage, #	-	0	0	-	0	-
Grade, %	-	0	0	-	0	-
Peak Hour Factor	97	97	97	97	97	97
Heavy Vehicles, %	30	30	37	37	2	2
Mvmt Flow	10	402	268	165	186	10

Major/Minor	Major1		Major2		Minor2	
Conflicting Flow All	433	0	-	0	774	351
Stage 1	-	-	-	-	351	-
Stage 2	-	-	-	-	423	-
Critical Hdwy	4.4	-	-	-	6.42	6.22
Critical Hdwy Stg 1	-	-	-	-	5.42	-
Critical Hdwy Stg 2	-	-	-	-	5.42	-
Follow-up Hdwy	2.47	-	-	-	3.518	3.318
Pot Cap-1 Maneuver	992	-	-	-	367	692
Stage 1	-	-	-	-	713	-
Stage 2	-	-	-	-	661	-
Platoon blocked, %		-	-	-		
Mov Cap-1 Maneuver	992	-	-	-	362	692
Mov Cap-2 Maneuver	-	-	-	-	362	-
Stage 1	-	-	-	-	713	-
Stage 2	-	-	-	-	652	-

Approach	EB	WB	SB
HCM Control Delay, s	0.2	0	25.1
HCM LOS			D

Minor Lane/Major Mvmt	EBL	EBT	WBT	WBR	SBLn1
Capacity (veh/h)	992	-	-	-	371
HCM Lane V/C Ratio	0.01	-	-	-	0.528
HCM Control Delay (s)	8.7	0	-	-	25.1
HCM Lane LOS	A	A	-	-	D
HCM 95th %tile Q(veh)	0	-	-	-	3

Intersection	
Int Delay, s/veh	0.9

Movement	EBL	EBT	EBR	WBL	WBT	WBR	NBL	NBT	NBR
Vol, veh/h	70	460	390	90	410	10	100	100	60
Conflicting Peds, #/hr	0	0	0	0	0	0	0	0	0
Sign Control	Free	Free	Free	Free	Free	Free	Stop	Stop	Stop
RT Channelized	-	-	None	-	-	None	-	-	None
Storage Length	-	-	-	-	-	-	-	-	-
Veh in Median Storage, #	-	0	-	-	0	-	-	0	-
Grade, %	-	0	-	-	0	-	-	0	-
Peak Hour Factor	79	79	79	79	79	79	79	79	79
Heavy Vehicles, %	30	30	30	39	39	39	2	2	2
Mvmt Flow	89	582	494	114	519	13	127	127	76

Major/Minor	Major1			Major2			Minor1		
Conflicting Flow All	532	0	0	1076	0	0	1949	1765	829
Stage 1	-	-	-	-	-	-	1006	1006	-
Stage 2	-	-	-	-	-	-	943	759	-
Critical Hdwy	4.4	-	-	4.49	-	-	7.12	6.52	6.22
Critical Hdwy Stg 1	-	-	-	-	-	-	6.12	5.52	-
Critical Hdwy Stg 2	-	-	-	-	-	-	6.12	5.52	-
Follow-up Hdwy	2.47	-	-	2.551	-	-	3.518	4.018	3.318
Pot Cap-1 Maneuver	908	-	-	527	-	-	~ 49	~ 84	370
Stage 1	-	-	-	-	-	-	291	319	-
Stage 2	-	-	-	-	-	-	315	415	-
Platoon blocked, %		-	-		-	-			
Mov Cap-1 Maneuver	908	-	-	527	-	-	-	~ 42	370
Mov Cap-2 Maneuver	-	-	-	-	-	-	-	~ 42	-
Stage 1	-	-	-	-	-	-	209	229	-
Stage 2	-	-	-	-	-	-	-	287	-

Approach	EB	WB	NB
HCM Control Delay, s	0.7	2.4	
HCM LOS			-

Minor Lane/Major Mvmt	NBLn1	EBL	EBT	EBR	WBL	WBT	WBR	SBLn1
Capacity (veh/h)	-	908	-	-	527	-	-	-
HCM Lane V/C Ratio	-	0.098	-	-	0.216	-	-	-
HCM Control Delay (s)	-	9.4	0	-	13.7	0	-	-
HCM Lane LOS	-	A	A	-	B	A	-	-
HCM 95th %tile Q(veh)	-	0.3	-	-	0.8	-	-	-

Notes

~: Volume exceeds capacity $: Delay exceeds 300s +: Computation Not Defined *: All major volume in platoon

Intersection			
Int Delay, s/veh			

Movement	SBL	SBT	SBR
Vol, veh/h	10	290	10
Conflicting Peds, #/hr	0	0	0
Sign Control	Stop	Stop	Stop
RT Channelized	-	-	None
Storage Length	-	-	-
Veh in Median Storage, #	-	0	-
Grade, %	-	0	-
Peak Hour Factor	79	79	79
Heavy Vehicles, %	2	2	2
Mvmt Flow	13	367	13

Major/Minor	Minor2		
Conflicting Flow All	1861	2006	525
Stage 1	753	753	-
Stage 2	1108	1253	-
Critical Hdwy	7.12	6.52	6.22
Critical Hdwy Stg 1	6.12	5.52	-
Critical Hdwy Stg 2	6.12	5.52	-
Follow-up Hdwy	3.518	4.018	3.318
Pot Cap-1 Maneuver	56	~ 59	552
Stage 1	402	417	-
Stage 2	255	~ 244	-
Platoon blocked, %			
Mov Cap-1 Maneuver	-	~ 29	552
Mov Cap-2 Maneuver	-	~ 29	-
Stage 1	289	~ 289	-
Stage 2	65	~ 175	-

Approach	SB
HCM Control Delay, s	
HCM LOS	-

Minor Lane/Major Mvmt

Intersection	
Int Delay, s/veh	110.5

Movement	EBL	EBT	WBT	WBR	SBL	SBR
Vol, veh/h	20	500	480	160	240	30
Conflicting Peds, #/hr	0	0	0	0	0	0
Sign Control	Free	Free	Free	Free	Stop	Stop
RT Channelized	-	None	-	None	-	None
Storage Length	-	-	-	-	0	-
Veh in Median Storage, #	-	0	0	-	0	-
Grade, %	-	0	0	-	0	-
Peak Hour Factor	79	79	79	79	79	79
Heavy Vehicles, %	30	30	39	39	2	2
Mvmt Flow	25	633	608	203	304	38

Major/Minor	Major1		Major2		Minor2	
Conflicting Flow All	810	0	-	0	1393	709
Stage 1	-	-	-	-	709	-
Stage 2	-	-	-	-	684	-
Critical Hdwy	4.4	-	-	-	6.42	6.22
Critical Hdwy Stg 1	-	-	-	-	5.42	-
Critical Hdwy Stg 2	-	-	-	-	5.42	-
Follow-up Hdwy	2.47	-	-	-	3.518	3.318
Pot Cap-1 Maneuver	706	-	-	-	~ 156	434
Stage 1	-	-	-	-	488	-
Stage 2	-	-	-	-	501	-
Platoon blocked, %		-	-	-		
Mov Cap-1 Maneuver	706	-	-	-	~ 147	434
Mov Cap-2 Maneuver	-	-	-	-	~ 147	-
Stage 1	-	-	-	-	488	-
Stage 2	-	-	-	-	473	-

Approach	EB	WB	SB
HCM Control Delay, s	0.4	0	$ 584.3
HCM LOS			F

Minor Lane/Major Mvmt	EBL	EBT	WBT	WBR	SBLn1
Capacity (veh/h)	706	-	-	-	159
HCM Lane V/C Ratio	0.036	-	-	-	2.15
HCM Control Delay (s)	10.3	0	-	-	$ 584.3
HCM Lane LOS	B	A	-	-	F
HCM 95th %tile Q(veh)	0.1	-	-	-	27.5

Notes

~: Volume exceeds capacity $: Delay exceeds 300s +: Computation Not Defined *: All major volume in platoon

Intersection	
Int Delay, s/veh	1.7

Movement	EBL	EBT	WBT	WBR	SBL	SBR
Vol, veh/h	20	440	530	10	50	20
Conflicting Peds, #/hr	0	0	0	0	0	0
Sign Control	Free	Free	Free	Free	Stop	Stop
RT Channelized	-	None	-	None	-	None
Storage Length	-	-	-	-	0	-
Veh in Median Storage, #	-	0	0	-	0	-
Grade, %	-	0	0	-	0	-
Peak Hour Factor	92	92	92	92	92	92
Heavy Vehicles, %	33	33	41	41	2	2
Mvmt Flow	22	478	576	11	54	22

Major/Minor	Major1		Major2		Minor2	
Conflicting Flow All	587	0	-	0	1104	582
Stage 1	-	-	-	-	582	-
Stage 2	-	-	-	-	522	-
Critical Hdwy	4.43	-	-	-	6.42	6.22
Critical Hdwy Stg 1	-	-	-	-	5.42	-
Critical Hdwy Stg 2	-	-	-	-	5.42	-
Follow-up Hdwy	2.497	-	-	-	3.518	3.318
Pot Cap-1 Maneuver	852	-	-	-	234	513
Stage 1	-	-	-	-	559	-
Stage 2	-	-	-	-	595	-
Platoon blocked, %		-	-	-		
Mov Cap-1 Maneuver	852	-	-	-	226	513
Mov Cap-2 Maneuver	-	-	-	-	226	-
Stage 1	-	-	-	-	559	-
Stage 2	-	-	-	-	574	-

Approach	EB	WB	SB
HCM Control Delay, s	0.4	0	23.6
HCM LOS			C

Minor Lane/Major Mvmt	EBL	EBT	WBT	WBR	SBLn1
Capacity (veh/h)	852	-	-	-	269
HCM Lane V/C Ratio	0.026	-	-	-	0.283
HCM Control Delay (s)	9.3	0	-	-	23.6
HCM Lane LOS	A	A	-	-	C
HCM 95th %tile Q(veh)	0.1	-	-	-	1.1

Intersection	
Int Delay, s/veh	4.3

Movement	EBL	EBT	EBR	WBL	WBT	WBR	NBL	NBT	NBR
Vol, veh/h	10	260	140	60	520	10	20	10	40
Conflicting Peds, #/hr	0	0	0	0	0	0	0	0	0
Sign Control	Free	Free	Free	Free	Free	Free	Stop	Stop	Stop
RT Channelized	-	-	None	-	-	None	-	-	None
Storage Length	-	-	-	-	-	-	-	-	-
Veh in Median Storage, #	-	0	-	-	0	-	-	0	-
Grade, %	-	0	-	-	0	-	-	0	-
Peak Hour Factor	74	74	74	74	74	74	74	74	74
Heavy Vehicles, %	33	33	33	41	41	41	2	2	2
Mvmt Flow	14	351	189	81	703	14	27	14	54

Major/Minor	Major1			Major2			Minor1		
Conflicting Flow All	716	0	0	541	0	0	1358	1351	446
Stage 1	-	-	-	-	-	-	473	473	-
Stage 2	-	-	-	-	-	-	885	878	-
Critical Hdwy	4.43	-	-	4.51	-	-	7.12	6.52	6.22
Critical Hdwy Stg 1	-	-	-	-	-	-	6.12	5.52	-
Critical Hdwy Stg 2	-	-	-	-	-	-	6.12	5.52	-
Follow-up Hdwy	2.497	-	-	2.569	-	-	3.518	4.018	3.318
Pot Cap-1 Maneuver	758	-	-	858	-	-	126	150	612
Stage 1	-	-	-	-	-	-	572	558	-
Stage 2	-	-	-	-	-	-	340	366	-
Platoon blocked, %		-	-		-	-			
Mov Cap-1 Maneuver	758	-	-	858	-	-	96	123	612
Mov Cap-2 Maneuver	-	-	-	-	-	-	96	123	-
Stage 1	-	-	-	-	-	-	557	543	-
Stage 2	-	-	-	-	-	-	266	309	-

Approach	EB	WB	NB
HCM Control Delay, s	0.2	1	39.1
HCM LOS			E

Minor Lane/Major Mvmt	NBLn1	EBL	EBT	EBR	WBL	WBT	WBR	SBLn1
Capacity (veh/h)	197	758	-	-	858	-	-	131
HCM Lane V/C Ratio	0.48	0.018	-	-	0.095	-	-	0.309
HCM Control Delay (s)	39.1	9.8	0	-	9.6	0	-	44.3
HCM Lane LOS	E	A	A	-	A	A	-	E
HCM 95th %tile Q(veh)	2.3	0.1	-	-	0.3	-	-	1.2

Intersection	
Int Delay, s/veh	

Movement	SBL	SBT	SBR
Vol, veh/h	10	10	10
Conflicting Peds, #/hr	0	0	0
Sign Control	Stop	Stop	Stop
RT Channelized	-	-	None
Storage Length	-	-	-
Veh in Median Storage, #	-	0	-
Grade, %	-	0	-
Peak Hour Factor	74	74	74
Heavy Vehicles, %	2	2	2
Mvmt Flow	14	14	14

Major/Minor	Minor2		
Conflicting Flow All	1379	1440	709
Stage 1	872	872	-
Stage 2	507	568	-
Critical Hdwy	7.12	6.52	6.22
Critical Hdwy Stg 1	6.12	5.52	-
Critical Hdwy Stg 2	6.12	5.52	-
Follow-up Hdwy	3.518	4.018	3.318
Pot Cap-1 Maneuver	122	133	434
Stage 1	345	368	-
Stage 2	548	506	-
Platoon blocked, %			
Mov Cap-1 Maneuver	88	109	434
Mov Cap-2 Maneuver	88	109	-
Stage 1	336	310	-
Stage 2	474	492	-

Approach	SB
HCM Control Delay, s	44.3
HCM LOS	E

Minor Lane/Major Mvmt

Intersection	
Int Delay, s/veh	4.2

Movement	EBL	EBT	EBR	WBL	WBT	WBR	NBL	NBT	NBR
Vol, veh/h	10	280	10	10	540	10	10	10	10
Conflicting Peds, #/hr	0	0	0	0	0	0	0	0	0
Sign Control	Free	Free	Free	Free	Free	Free	Stop	Stop	Stop
RT Channelized	-	-	None	-	-	None	-	-	None
Storage Length	-	-	-	-	-	-	-	-	-
Veh in Median Storage, #	-	0	-	-	0	-	-	0	-
Grade, %	-	0	-	-	0	-	-	0	-
Peak Hour Factor	79	79	79	79	79	79	79	79	79
Heavy Vehicles, %	31	31	31	39	39	39	2	2	2
Mvmt Flow	13	354	13	13	684	13	13	13	13

Major/Minor	Major1			Major2			Minor1		
Conflicting Flow All	696	0	0	367	0	0	1120	1108	361
Stage 1	-	-	-	-	-	-	386	386	-
Stage 2	-	-	-	-	-	-	734	722	-
Critical Hdwy	4.41	-	-	4.49	-	-	7.12	6.52	6.22
Critical Hdwy Stg 1	-	-	-	-	-	-	6.12	5.52	-
Critical Hdwy Stg 2	-	-	-	-	-	-	6.12	5.52	-
Follow-up Hdwy	2.479	-	-	2.551	-	-	3.518	4.018	3.318
Pot Cap-1 Maneuver	779	-	-	1014	-	-	184	210	684
Stage 1	-	-	-	-	-	-	637	610	-
Stage 2	-	-	-	-	-	-	412	431	-
Platoon blocked, %		-	-		-	-			
Mov Cap-1 Maneuver	779	-	-	1014	-	-	160	201	684
Mov Cap-2 Maneuver	-	-	-	-	-	-	160	201	-
Stage 1	-	-	-	-	-	-	624	597	-
Stage 2	-	-	-	-	-	-	369	422	-

Approach	EB	WB	NB
HCM Control Delay, s	0.3	0.2	23.2
HCM LOS			C

Minor Lane/Major Mvmt	NBLn1	EBL	EBT	EBR	WBL	WBT	WBR	SBLn1
Capacity (veh/h)	236	779	-	-	1014	-	-	203
HCM Lane V/C Ratio	0.161	0.016	-	-	0.012	-	-	0.499
HCM Control Delay (s)	23.2	9.7	0	-	8.6	0	-	39.2
HCM Lane LOS	C	A	A	-	A	A	-	E
HCM 95th %tile Q(veh)	0.6	0.1	-	-	0	-	-	2.5

Intersection			
Int Delay, s/veh			

Movement	SBL	SBT	SBR
Vol, veh/h	50	10	20
Conflicting Peds, #/hr	0	0	0
Sign Control	Stop	Stop	Stop
RT Channelized	-	-	None
Storage Length	-	-	-
Veh in Median Storage, #	-	0	-
Grade, %	-	0	-
Peak Hour Factor	79	79	79
Heavy Vehicles, %	2	2	2
Mvmt Flow	63	13	25

Major/Minor	Minor2		
Conflicting Flow All	1114	1107	690
Stage 1	715	715	-
Stage 2	399	392	-
Critical Hdwy	7.12	6.52	6.22
Critical Hdwy Stg 1	6.12	5.52	-
Critical Hdwy Stg 2	6.12	5.52	-
Follow-up Hdwy	3.518	4.018	3.318
Pot Cap-1 Maneuver	185	210	445
Stage 1	422	434	-
Stage 2	627	606	-
Platoon blocked, %			
Mov Cap-1 Maneuver	167	201	445
Mov Cap-2 Maneuver	167	201	-
Stage 1	413	425	-
Stage 2	590	593	-

Approach	SB
HCM Control Delay, s	39.2
HCM LOS	E

Minor Lane/Major Mvmt

Intersection	
Int Delay, s/veh	172.1

Movement	EBL	EBT	EBR	WBL	WBT	WBR	NBL	NBT	NBR
Vol, veh/h	20	270	50	10	430	70	20	20	10
Conflicting Peds, #/hr	0	0	0	0	0	0	0	0	0
Sign Control	Free	Free	Free	Free	Free	Free	Stop	Stop	Stop
RT Channelized	-	-	None	-	-	None	-	-	None
Storage Length	-	-	-	-	-	-	-	-	-
Veh in Median Storage, #	-	0	-	-	0	-	-	0	-
Grade, %	-	0	-	-	0	-	-	0	-
Peak Hour Factor	72	72	72	72	72	72	72	72	72
Heavy Vehicles, %	31	31	31	39	39	39	2	2	2
Mvmt Flow	28	375	69	14	597	97	28	28	14

Major/Minor	Major1			Major2			Minor1		
Conflicting Flow All	694	0	0	444	0	0	1257	1187	410
Stage 1	-	-	-	-	-	-	465	465	-
Stage 2	-	-	-	-	-	-	792	722	-
Critical Hdwy	4.41	-	-	4.49	-	-	7.12	6.52	6.22
Critical Hdwy Stg 1	-	-	-	-	-	-	6.12	5.52	-
Critical Hdwy Stg 2	-	-	-	-	-	-	6.12	5.52	-
Follow-up Hdwy	2.479	-	-	2.551	-	-	3.518	4.018	3.318
Pot Cap-1 Maneuver	781	-	-	945	-	-	148	188	642
Stage 1	-	-	-	-	-	-	578	563	-
Stage 2	-	-	-	-	-	-	382	431	-
Platoon blocked, %		-	-		-	-			
Mov Cap-1 Maneuver	781	-	-	945	-	-	66	175	642
Mov Cap-2 Maneuver	-	-	-	-	-	-	66	175	-
Stage 1	-	-	-	-	-	-	550	536	-
Stage 2	-	-	-	-	-	-	201	420	-

Approach	EB	WB	NB
HCM Control Delay, s	0.6	0.2	74.2
HCM LOS			F

Minor Lane/Major Mvmt	NBLn1	EBL	EBT	EBR	WBL	WBT	WBR	SBLn1
Capacity (veh/h)	116	781	-	-	945	-	-	201
HCM Lane V/C Ratio	0.599	0.036	-	-	0.015	-	-	2.28
HCM Control Delay (s)	74.2	9.8	0	-	8.9	0	-	$ 629.3
HCM Lane LOS	F	A	A	-	A	A	-	F
HCM 95th %tile Q(veh)	3	0.1	-	-	0	-	-	36.8

Notes

~: Volume exceeds capacity $: Delay exceeds 300s +: Computation Not Defined *: All major volume in platoon

Intersection			
Int Delay, s/veh			

Movement	SBL	SBT	SBR
Vol, veh/h	160	40	130
Conflicting Peds, #/hr	0	0	0
Sign Control	Stop	Stop	Stop
RT Channelized	-	-	None
Storage Length	-	-	-
Veh in Median Storage, #	-	0	-
Grade, %	-	0	-
Peak Hour Factor	72	72	72
Heavy Vehicles, %	2	2	2
Mvmt Flow	222	56	181

Major/Minor	Minor2		
Conflicting Flow All	1160	1174	646
Stage 1	674	674	-
Stage 2	486	500	-
Critical Hdwy	7.12	6.52	6.22
Critical Hdwy Stg 1	6.12	5.52	-
Critical Hdwy Stg 2	6.12	5.52	-
Follow-up Hdwy	3.518	4.018	3.318
Pot Cap-1 Maneuver	~ 172	192	472
Stage 1	444	454	-
Stage 2	563	543	-
Platoon blocked, %			
Mov Cap-1 Maneuver	~ 140	178	472
Mov Cap-2 Maneuver	~ 140	178	-
Stage 1	423	443	-
Stage 2	497	517	-

Approach	SB
HCM Control Delay, s	$ 629.3
HCM LOS	F

Minor Lane/Major Mvmt

Intersection	
Int Delay, s/veh	5.9

Movement	EBL	EBT	EBR	WBL	WBT	WBR	NBL	NBT	NBR
Vol, veh/h	10	400	10	10	490	10	10	10	10
Conflicting Peds, #/hr	0	0	0	0	0	0	0	0	0
Sign Control	Free	Free	Free	Free	Free	Free	Stop	Stop	Stop
RT Channelized	-	-	None	-	-	None	-	-	None
Storage Length	-	-	-	-	-	-	-	-	-
Veh in Median Storage, #	-	0	-	-	0	-	-	0	-
Grade, %	-	0	-	-	0	-	-	0	-
Peak Hour Factor	77	77	77	77	77	77	77	77	77
Heavy Vehicles, %	29	29	29	36	36	36	2	2	2
Mvmt Flow	13	519	13	13	636	13	13	13	13

Major/Minor	Major1			Major2			Minor1		
Conflicting Flow All	649	0	0	532	0	0	1240	1227	526
Stage 1	-	-	-	-	-	-	552	552	-
Stage 2	-	-	-	-	-	-	688	675	-
Critical Hdwy	4.39	-	-	4.46	-	-	7.12	6.52	6.22
Critical Hdwy Stg 1	-	-	-	-	-	-	6.12	5.52	-
Critical Hdwy Stg 2	-	-	-	-	-	-	6.12	5.52	-
Follow-up Hdwy	2.461	-	-	2.524	-	-	3.518	4.018	3.318
Pot Cap-1 Maneuver	821	-	-	884	-	-	152	178	552
Stage 1	-	-	-	-	-	-	518	515	-
Stage 2	-	-	-	-	-	-	436	453	-
Platoon blocked, %		-	-		-	-			
Mov Cap-1 Maneuver	821	-	-	884	-	-	126	170	552
Mov Cap-2 Maneuver	-	-	-	-	-	-	126	170	-
Stage 1	-	-	-	-	-	-	506	503	-
Stage 2	-	-	-	-	-	-	390	443	-

Approach	EB	WB	NB
HCM Control Delay, s	0.2	0.2	28.5
HCM LOS			D

Minor Lane/Major Mvmt	NBLn1	EBL	EBT	EBR	WBL	WBT	WBR	SBLn1
Capacity (veh/h)	192	821	-	-	884	-	-	158
HCM Lane V/C Ratio	0.203	0.016	-	-	0.015	-	-	0.658
HCM Control Delay (s)	28.5	9.5	0	-	9.1	0	-	63.3
HCM Lane LOS	D	A	A	-	A	A	-	F
HCM 95th %tile Q(veh)	0.7	0	-	-	0	-	-	3.7

Intersection			
Int Delay, s/veh			

Movement	SBL	SBT	SBR
Vol, veh/h	50	20	10
Conflicting Peds, #/hr	0	0	0
Sign Control	Stop	Stop	Stop
RT Channelized	-	-	None
Storage Length	-	-	-
Veh in Median Storage, #	-	0	-
Grade, %	-	0	-
Peak Hour Factor	77	77	77
Heavy Vehicles, %	2	2	2
Mvmt Flow	65	26	13

Major/Minor	Minor2		
Conflicting Flow All	1234	1227	643
Stage 1	669	669	-
Stage 2	565	558	-
Critical Hdwy	7.12	6.52	6.22
Critical Hdwy Stg 1	6.12	5.52	-
Critical Hdwy Stg 2	6.12	5.52	-
Follow-up Hdwy	3.518	4.018	3.318
Pot Cap-1 Maneuver	153	178	473
Stage 1	447	456	-
Stage 2	510	512	-
Platoon blocked, %			
Mov Cap-1 Maneuver	136	170	473
Mov Cap-2 Maneuver	136	170	-
Stage 1	437	446	-
Stage 2	474	500	-

Approach	SB
HCM Control Delay, s	63.3
HCM LOS	F

Minor Lane/Major Mvmt

Intersection	
Int Delay, s/veh	34.3

Movement	EBL	EBT	EBR	WBL	WBT	WBR	NBL	NBT	NBR
Vol, veh/h	40	430	20	20	470	50	10	50	20
Conflicting Peds, #/hr	0	0	0	0	0	0	0	0	0
Sign Control	Free	Free	Free	Free	Free	Free	Stop	Stop	Stop
RT Channelized	-	-	None	-	-	None	-	-	None
Storage Length	-	-	-	-	-	-	-	-	-
Veh in Median Storage, #	-	0	-	-	0	-	-	0	-
Grade, %	-	0	-	-	0	-	-	0	-
Peak Hour Factor	85	85	85	85	85	85	85	85	85
Heavy Vehicles, %	29	29	29	36	36	36	2	2	2
Mvmt Flow	47	506	24	24	553	59	12	59	24

Major/Minor	Major1			Major2			Minor1		
Conflicting Flow All	612	0	0	529	0	0	1318	1271	518
Stage 1	-	-	-	-	-	-	612	612	-
Stage 2	-	-	-	-	-	-	706	659	-
Critical Hdwy	4.39	-	-	4.46	-	-	7.12	6.52	6.22
Critical Hdwy Stg 1	-	-	-	-	-	-	6.12	5.52	-
Critical Hdwy Stg 2	-	-	-	-	-	-	6.12	5.52	-
Follow-up Hdwy	2.461	-	-	2.524	-	-	3.518	4.018	3.318
Pot Cap-1 Maneuver	849	-	-	886	-	-	134	168	558
Stage 1	-	-	-	-	-	-	480	484	-
Stage 2	-	-	-	-	-	-	427	461	-
Platoon blocked, %		-	-		-	-			
Mov Cap-1 Maneuver	849	-	-	886	-	-	55	148	558
Mov Cap-2 Maneuver	-	-	-	-	-	-	55	148	-
Stage 1	-	-	-	-	-	-	442	446	-
Stage 2	-	-	-	-	-	-	288	442	-

Approach	EB	WB	NB
HCM Control Delay, s	0.8	0.3	67.9
HCM LOS			F

Minor Lane/Major Mvmt	NBLn1	EBL	EBT	EBR	WBL	WBT	WBR	SBLn1
Capacity (veh/h)	144	849	-	-	886	-	-	156
HCM Lane V/C Ratio	0.654	0.055	-	-	0.027	-	-	1.282
HCM Control Delay (s)	67.9	9.5	0	-	9.2	0	-	223.2
HCM Lane LOS	F	A	A	-	A	A	-	F
HCM 95th %tile Q(veh)	3.6	0.2	-	-	0.1	-	-	11.8

Intersection			
Int Delay, s/veh			

Movement	SBL	SBT	SBR
Vol, veh/h	40	80	50
Conflicting Peds, #/hr	0	0	0
Sign Control	Stop	Stop	Stop
RT Channelized	-	-	None
Storage Length	-	-	-
Veh in Median Storage, #	-	0	-
Grade, %	-	0	-
Peak Hour Factor	85	85	85
Heavy Vehicles, %	2	2	2
Mvmt Flow	47	94	59

Major/Minor	Minor2		
Conflicting Flow All	1282	1253	582
Stage 1	629	629	-
Stage 2	653	624	-
Critical Hdwy	7.12	6.52	6.22
Critical Hdwy Stg 1	6.12	5.52	-
Critical Hdwy Stg 2	6.12	5.52	-
Follow-up Hdwy	3.518	4.018	3.318
Pot Cap-1 Maneuver	142	172	513
Stage 1	470	475	-
Stage 2	456	478	-
Platoon blocked, %			
Mov Cap-1 Maneuver	86	152	513
Mov Cap-2 Maneuver	86	152	-
Stage 1	433	456	-
Stage 2	349	440	-

Approach	SB
HCM Control Delay, s	223.2
HCM LOS	F

Minor Lane/Major Mvmt

Intersection	
Int Delay, s/veh	1.7

Movement	EBL	EBT	EBR	WBL	WBT	WBR	NBL	NBT	NBR
Vol, veh/h	10	480	10	10	510	10	10	10	10
Conflicting Peds, #/hr	0	0	0	0	0	0	0	0	0
Sign Control	Free	Free	Free	Free	Free	Free	Stop	Stop	Stop
RT Channelized	-	-	None	-	-	None	-	-	None
Storage Length	-	-	-	-	-	-	-	-	-
Veh in Median Storage, #	-	0	-	-	0	-	-	0	-
Grade, %	-	0	-	-	0	-	-	0	-
Peak Hour Factor	84	84	84	84	84	84	84	84	84
Heavy Vehicles, %	29	29	29	36	36	36	2	2	2
Mvmt Flow	12	571	12	12	607	12	12	12	12

Major/Minor	Major1			Major2			Minor1		
Conflicting Flow All	619	0	0	583	0	0	1250	1244	577
Stage 1	-	-	-	-	-	-	601	601	-
Stage 2	-	-	-	-	-	-	649	643	-
Critical Hdwy	4.39	-	-	4.46	-	-	7.12	6.52	6.22
Critical Hdwy Stg 1	-	-	-	-	-	-	6.12	5.52	-
Critical Hdwy Stg 2	-	-	-	-	-	-	6.12	5.52	-
Follow-up Hdwy	2.461	-	-	2.524	-	-	3.518	4.018	3.318
Pot Cap-1 Maneuver	843	-	-	844	-	-	150	174	516
Stage 1	-	-	-	-	-	-	487	489	-
Stage 2	-	-	-	-	-	-	458	468	-
Platoon blocked, %		-	-		-	-			
Mov Cap-1 Maneuver	843	-	-	844	-	-	134	167	516
Mov Cap-2 Maneuver	-	-	-	-	-	-	134	167	-
Stage 1	-	-	-	-	-	-	477	479	-
Stage 2	-	-	-	-	-	-	426	458	-

Approach	EB	WB	NB
HCM Control Delay, s	0.2	0.2	27.6
HCM LOS			D

Minor Lane/Major Mvmt	NBLn1	EBL	EBT	EBR	WBL	WBT	WBR	SBLn1
Capacity (veh/h)	195	843	-	-	844	-	-	194
HCM Lane V/C Ratio	0.183	0.014	-	-	0.014	-	-	0.184
HCM Control Delay (s)	27.6	9.3	0	-	9.3	0	-	27.7
HCM Lane LOS	D	A	A	-	A	A	-	D
HCM 95th %tile Q(veh)	0.7	0	-	-	0	-	-	0.7

Intersection			
Int Delay, s/veh			

Movement	SBL	SBT	SBR
Vol, veh/h	10	10	10
Conflicting Peds, #/hr	0	0	0
Sign Control	Stop	Stop	Stop
RT Channelized	-	-	None
Storage Length	-	-	-
Veh in Median Storage, #	-	0	-
Grade, %	-	0	-
Peak Hour Factor	84	84	84
Heavy Vehicles, %	2	2	2
Mvmt Flow	12	12	12

Major/Minor	Minor2		
Conflicting Flow All	1250	1244	613
Stage 1	637	637	-
Stage 2	613	607	-
Critical Hdwy	7.12	6.52	6.22
Critical Hdwy Stg 1	6.12	5.52	-
Critical Hdwy Stg 2	6.12	5.52	-
Follow-up Hdwy	3.518	4.018	3.318
Pot Cap-1 Maneuver	150	174	492
Stage 1	465	471	-
Stage 2	480	486	-
Platoon blocked, %			
Mov Cap-1 Maneuver	134	167	492
Mov Cap-2 Maneuver	134	167	-
Stage 1	455	461	-
Stage 2	448	476	-

Approach	SB
HCM Control Delay, s	27.7
HCM LOS	D

Minor Lane/Major Mvmt

Intersection	
Int Delay, s/veh	2.6

Movement	EBL	EBT	EBR	WBL	WBT	WBR	NBL	NBT	NBR
Vol, veh/h	10	450	50	20	480	10	20	10	10
Conflicting Peds, #/hr	0	0	0	0	0	0	0	0	0
Sign Control	Free	Free	Free	Free	Free	Free	Stop	Stop	Stop
RT Channelized	-	-	None	-	-	None	-	-	None
Storage Length	-	-	-	-	-	-	-	-	-
Veh in Median Storage, #	-	0	-	-	0	-	-	0	-
Grade, %	-	0	-	-	0	-	-	0	-
Peak Hour Factor	92	92	92	92	92	92	92	92	92
Heavy Vehicles, %	26	26	26	36	36	36	2	2	2
Mvmt Flow	11	489	54	22	522	11	22	11	11

Major/Minor	Major1			Major2			Minor1		
Conflicting Flow All	533	0	0	543	0	0	1125	1114	516
Stage 1	-	-	-	-	-	-	538	538	-
Stage 2	-	-	-	-	-	-	587	576	-
Critical Hdwy	4.36	-	-	4.46	-	-	7.12	6.52	6.22
Critical Hdwy Stg 1	-	-	-	-	-	-	6.12	5.52	-
Critical Hdwy Stg 2	-	-	-	-	-	-	6.12	5.52	-
Follow-up Hdwy	2.434	-	-	2.524	-	-	3.518	4.018	3.318
Pot Cap-1 Maneuver	924	-	-	875	-	-	182	208	559
Stage 1	-	-	-	-	-	-	527	522	-
Stage 2	-	-	-	-	-	-	496	502	-
Platoon blocked, %		-	-		-	-			
Mov Cap-1 Maneuver	924	-	-	875	-	-	156	197	559
Mov Cap-2 Maneuver	-	-	-	-	-	-	156	197	-
Stage 1	-	-	-	-	-	-	518	513	-
Stage 2	-	-	-	-	-	-	448	484	-

Approach	EB	WB	NB
HCM Control Delay, s	0.2	0.4	27.5
HCM LOS			D

Minor Lane/Major Mvmt	NBLn1	EBL	EBT	EBR	WBL	WBT	WBR	SBLn1
Capacity (veh/h)	203	924	-	-	875	-	-	205
HCM Lane V/C Ratio	0.214	0.012	-	-	0.025	-	-	0.265
HCM Control Delay (s)	27.5	8.9	0	-	9.2	0	-	28.8
HCM Lane LOS	D	A	A	-	A	A	-	D
HCM 95th %tile Q(veh)	0.8	0	-	-	0.1	-	-	1

Intersection			
Int Delay, s/veh			

Movement	SBL	SBT	SBR
Vol, veh/h	20	20	10
Conflicting Peds, #/hr	0	0	0
Sign Control	Stop	Stop	Stop
RT Channelized	-	-	None
Storage Length	-	-	-
Veh in Median Storage, #	-	0	-
Grade, %	-	0	-
Peak Hour Factor	92	92	92
Heavy Vehicles, %	2	2	2
Mvmt Flow	22	22	11

Major/Minor	Minor2		
Conflicting Flow All	1120	1136	527
Stage 1	571	571	-
Stage 2	549	565	-
Critical Hdwy	7.12	6.52	6.22
Critical Hdwy Stg 1	6.12	5.52	-
Critical Hdwy Stg 2	6.12	5.52	-
Follow-up Hdwy	3.518	4.018	3.318
Pot Cap-1 Maneuver	184	202	551
Stage 1	506	505	-
Stage 2	520	508	-
Platoon blocked, %			
Mov Cap-1 Maneuver	166	191	551
Mov Cap-2 Maneuver	166	191	-
Stage 1	497	487	-
Stage 2	491	499	-

Approach	SB
HCM Control Delay, s	28.8
HCM LOS	D

Minor Lane/Major Mvmt

Intersection	
Int Delay, s/veh	2.1

Movement	EBL	EBT	EBR	WBL	WBT	WBR	NBL	NBT	NBR
Vol, veh/h	10	490	10	10	480	10	10	20	10
Conflicting Peds, #/hr	0	0	0	0	0	0	0	0	0
Sign Control	Free	Free	Free	Free	Free	Free	Stop	Stop	Stop
RT Channelized	-	-	None	-	-	None	-	-	None
Storage Length	-	-	-	-	-	-	-	-	-
Veh in Median Storage, #	-	0	-	-	0	-	-	0	-
Grade, %	-	0	-	-	0	-	-	0	-
Peak Hour Factor	92	92	92	92	92	92	92	92	92
Heavy Vehicles, %	26	26	26	36	36	36	2	2	2
Mvmt Flow	11	533	11	11	522	11	11	22	11

Major/Minor	Major1			Major2			Minor1		
Conflicting Flow All	533	0	0	543	0	0	1120	1114	538
Stage 1	-	-	-	-	-	-	560	560	-
Stage 2	-	-	-	-	-	-	560	554	-
Critical Hdwy	4.36	-	-	4.46	-	-	7.12	6.52	6.22
Critical Hdwy Stg 1	-	-	-	-	-	-	6.12	5.52	-
Critical Hdwy Stg 2	-	-	-	-	-	-	6.12	5.52	-
Follow-up Hdwy	2.434	-	-	2.524	-	-	3.518	4.018	3.318
Pot Cap-1 Maneuver	924	-	-	875	-	-	184	208	543
Stage 1	-	-	-	-	-	-	513	511	-
Stage 2	-	-	-	-	-	-	513	514	-
Platoon blocked, %		-	-		-	-			
Mov Cap-1 Maneuver	924	-	-	875	-	-	168	201	543
Mov Cap-2 Maneuver	-	-	-	-	-	-	168	201	-
Stage 1	-	-	-	-	-	-	504	502	-
Stage 2	-	-	-	-	-	-	483	505	-

Approach	EB	WB	NB
HCM Control Delay, s	0.2	0.2	24.8
HCM LOS			C

Minor Lane/Major Mvmt	NBLn1	EBL	EBT	EBR	WBL	WBT	WBR	SBLn1
Capacity (veh/h)	225	924	-	-	875	-	-	207
HCM Lane V/C Ratio	0.193	0.012	-	-	0.012	-	-	0.21
HCM Control Delay (s)	24.8	8.9	0	-	9.2	0	-	27
HCM Lane LOS	C	A	A	-	A	A	-	D
HCM 95th %tile Q(veh)	0.7	0	-	-	0	-	-	0.8

Intersection			
Int Delay, s/veh			

Movement	SBL	SBT	SBR
Vol, veh/h	20	10	10
Conflicting Peds, #/hr	0	0	0
Sign Control	Stop	Stop	Stop
RT Channelized	-	-	None
Storage Length	-	-	-
Veh in Median Storage, #	-	0	-
Grade, %	-	0	-
Peak Hour Factor	92	92	92
Heavy Vehicles, %	2	2	2
Mvmt Flow	22	11	11

Major/Minor	Minor2		
Conflicting Flow All	1125	1114	527
Stage 1	549	549	-
Stage 2	576	565	-
Critical Hdwy	7.12	6.52	6.22
Critical Hdwy Stg 1	6.12	5.52	-
Critical Hdwy Stg 2	6.12	5.52	-
Follow-up Hdwy	3.518	4.018	3.318
Pot Cap-1 Maneuver	182	208	551
Stage 1	520	516	-
Stage 2	503	508	-
Platoon blocked, %			
Mov Cap-1 Maneuver	159	201	551
Mov Cap-2 Maneuver	159	201	-
Stage 1	511	507	-
Stage 2	464	499	-

Approach	SB
HCM Control Delay, s	27
HCM LOS	D

Minor Lane/Major Mvmt

Intersection	
Int Delay, s/veh	11.8

Movement	EBL	EBT	EBR	WBL	WBT	WBR	NBL	NBT	NBR
Vol, veh/h	20	460	30	10	420	20	20	40	10
Conflicting Peds, #/hr	0	0	0	0	0	0	0	0	0
Sign Control	Free	Free	Free	Free	Free	Free	Stop	Stop	Stop
RT Channelized	-	-	None	-	-	None	-	-	None
Storage Length	-	-	-	-	-	-	-	-	-
Veh in Median Storage, #	-	0	-	-	0	-	-	0	-
Grade, %	-	0	-	-	0	-	-	0	-
Peak Hour Factor	94	94	94	94	94	94	94	94	94
Heavy Vehicles, %	26	26	26	36	36	36	2	2	2
Mvmt Flow	21	489	32	11	447	21	21	43	11

Major/Minor	Major1			Major2			Minor1		
Conflicting Flow All	468	0	0	521	0	0	1117	1037	505
Stage 1	-	-	-	-	-	-	548	548	-
Stage 2	-	-	-	-	-	-	569	489	-
Critical Hdwy	4.36	-	-	4.46	-	-	7.12	6.52	6.22
Critical Hdwy Stg 1	-	-	-	-	-	-	6.12	5.52	-
Critical Hdwy Stg 2	-	-	-	-	-	-	6.12	5.52	-
Follow-up Hdwy	2.434	-	-	2.524	-	-	3.518	4.018	3.318
Pot Cap-1 Maneuver	979	-	-	893	-	-	185	231	567
Stage 1	-	-	-	-	-	-	521	517	-
Stage 2	-	-	-	-	-	-	507	549	-
Platoon blocked, %		-	-		-	-			
Mov Cap-1 Maneuver	979	-	-	893	-	-	105	220	567
Mov Cap-2 Maneuver	-	-	-	-	-	-	105	220	-
Stage 1	-	-	-	-	-	-	505	501	-
Stage 2	-	-	-	-	-	-	354	540	-

Approach	EB	WB	NB
HCM Control Delay, s	0.3	0.2	38.4
HCM LOS			E

Minor Lane/Major Mvmt	NBLn1	EBL	EBT	EBR	WBL	WBT	WBR	SBLn1
Capacity (veh/h)	180	979	-	-	893	-	-	277
HCM Lane V/C Ratio	0.414	0.022	-	-	0.012	-	-	0.807
HCM Control Delay (s)	38.4	8.8	0	-	9.1	0	-	55.8
HCM Lane LOS	E	A	A	-	A	A	-	F
HCM 95th %tile Q(veh)	1.9	0.1	-	-	0	-	-	6.4

Intersection			
Int Delay, s/veh			

Movement	SBL	SBT	SBR
Vol, veh/h	40	80	90
Conflicting Peds, #/hr	0	0	0
Sign Control	Stop	Stop	Stop
RT Channelized	-	-	None
Storage Length	-	-	-
Veh in Median Storage, #	-	0	-
Grade, %	-	0	-
Peak Hour Factor	94	94	94
Heavy Vehicles, %	2	2	2
Mvmt Flow	43	85	96

Major/Minor	Minor2		
Conflicting Flow All	1053	1043	457
Stage 1	479	479	-
Stage 2	574	564	-
Critical Hdwy	7.12	6.52	6.22
Critical Hdwy Stg 1	6.12	5.52	-
Critical Hdwy Stg 2	6.12	5.52	-
Follow-up Hdwy	3.518	4.018	3.318
Pot Cap-1 Maneuver	204	229	604
Stage 1	568	555	-
Stage 2	504	508	-
Platoon blocked, %			
Mov Cap-1 Maneuver	165	218	604
Mov Cap-2 Maneuver	165	218	-
Stage 1	551	546	-
Stage 2	439	493	-

Approach	SB
HCM Control Delay, s	55.8
HCM LOS	F

Minor Lane/Major Mvmt

Intersection	
Int Delay, s/veh	2.3

Movement	EBL	EBT	EBR	WBL	WBT	WBR	NBL	NBT	NBR
Vol, veh/h	10	500	10	10	420	10	10	10	10
Conflicting Peds, #/hr	0	0	0	0	0	0	0	0	0
Sign Control	Free	Free	Free	Free	Free	Free	Stop	Stop	Stop
RT Channelized	-	-	None	-	-	None	-	-	None
Storage Length	-	-	-	-	-	-	-	-	-
Veh in Median Storage, #	-	0	-	-	0	-	-	0	-
Grade, %	-	0	-	-	0	-	-	0	-
Peak Hour Factor	96	96	96	96	96	96	96	96	96
Heavy Vehicles, %	26	26	26	36	36	36	2	2	2
Mvmt Flow	10	521	10	10	438	10	10	10	10

Major/Minor	Major1			Major2			Minor1		
Conflicting Flow All	448	0	0	531	0	0	1021	1016	526
Stage 1	-	-	-	-	-	-	547	547	-
Stage 2	-	-	-	-	-	-	474	469	-
Critical Hdwy	4.36	-	-	4.46	-	-	7.12	6.52	6.22
Critical Hdwy Stg 1	-	-	-	-	-	-	6.12	5.52	-
Critical Hdwy Stg 2	-	-	-	-	-	-	6.12	5.52	-
Follow-up Hdwy	2.434	-	-	2.524	-	-	3.518	4.018	3.318
Pot Cap-1 Maneuver	996	-	-	885	-	-	215	238	552
Stage 1	-	-	-	-	-	-	521	517	-
Stage 2	-	-	-	-	-	-	571	561	-
Platoon blocked, %		-	-		-	-			
Mov Cap-1 Maneuver	996	-	-	885	-	-	200	231	552
Mov Cap-2 Maneuver	-	-	-	-	-	-	200	231	-
Stage 1	-	-	-	-	-	-	514	510	-
Stage 2	-	-	-	-	-	-	543	553	-

Approach	EB	WB	NB
HCM Control Delay, s	0.2	0.2	20.1
HCM LOS			C

Minor Lane/Major Mvmt	NBLn1	EBL	EBT	EBR	WBL	WBT	WBR	SBLn1
Capacity (veh/h)	269	996	-	-	885	-	-	230
HCM Lane V/C Ratio	0.116	0.01	-	-	0.012	-	-	0.272
HCM Control Delay (s)	20.1	8.7	0	-	9.1	0	-	26.4
HCM Lane LOS	C	A	A	-	A	A	-	D
HCM 95th %tile Q(veh)	0.4	0	-	-	0	-	-	1.1

Intersection			
Int Delay, s/veh			

Movement	SBL	SBT	SBR
Vol, veh/h	40	10	10
Conflicting Peds, #/hr	0	0	0
Sign Control	Stop	Stop	Stop
RT Channelized	-	-	None
Storage Length	-	-	-
Veh in Median Storage, #	-	0	-
Grade, %	-	0	-
Peak Hour Factor	96	96	96
Heavy Vehicles, %	2	2	2
Mvmt Flow	42	10	10

Major/Minor	Minor2		
Conflicting Flow All	1021	1016	443
Stage 1	464	464	-
Stage 2	557	552	-
Critical Hdwy	7.12	6.52	6.22
Critical Hdwy Stg 1	6.12	5.52	-
Critical Hdwy Stg 2	6.12	5.52	-
Follow-up Hdwy	3.518	4.018	3.318
Pot Cap-1 Maneuver	215	238	615
Stage 1	578	564	-
Stage 2	515	515	-
Platoon blocked, %			
Mov Cap-1 Maneuver	199	231	615
Mov Cap-2 Maneuver	199	231	-
Stage 1	570	556	-
Stage 2	488	508	-

Approach	SB
HCM Control Delay, s	26.4
HCM LOS	D

Minor Lane/Major Mvmt

Intersection	
Int Delay, s/veh	6.3

Movement	EBL	EBT	EBR	WBL	WBT	WBR	NBL	NBT	NBR
Vol, veh/h	0	120	450	20	180	0	0	0	0
Conflicting Peds, #/hr	0	0	0	0	0	0	0	0	0
Sign Control	Free	Free	Free	Free	Free	Free	Stop	Stop	Stop
RT Channelized	-	-	Free	-	-	None	-	-	None
Storage Length	-	-	-	135	-	-	-	-	-
Veh in Median Storage, #	-	0	-	-	0	-	-	0	-
Grade, %	-	0	-	-	0	-	-	0	-
Peak Hour Factor	92	92	92	92	92	92	92	92	92
Heavy Vehicles, %	38	38	38	44	44	44	2	2	2
Mvmt Flow	0	130	489	22	196	0	0	0	0

Major/Minor	Major1			Major2		
Conflicting Flow All	196	0	-	130	0	0
Stage 1	-	-	-	-	-	-
Stage 2	-	-	-	-	-	-
Critical Hdwy	4.48	-	-	4.54	-	-
Critical Hdwy Stg 1	-	-	-	-	-	-
Critical Hdwy Stg 2	-	-	-	-	-	-
Follow-up Hdwy	2.542	-	-	2.596	-	-
Pot Cap-1 Maneuver	1188	-	0	1233	-	-
Stage 1	-	-	0	-	-	-
Stage 2	-	-	0	-	-	-
Platoon blocked, %		-			-	-
Mov Cap-1 Maneuver	1188	-	-	1233	-	-
Mov Cap-2 Maneuver	-	-	-	-	-	-
Stage 1	-	-	-	-	-	-
Stage 2	-	-	-	-	-	-

Approach	EB	WB
HCM Control Delay, s	0	0.8
HCM LOS		

Minor Lane/Major Mvmt	EBL	EBT	WBL	WBT	WBR	SBLn1	SBLn2
Capacity (veh/h)	1188	-	1233	-	-	556	749
HCM Lane V/C Ratio	-	-	0.018	-	-	0.039	0.392
HCM Control Delay (s)	0	-	8	-	-	11.7	12.9
HCM Lane LOS	A	-	A	-	-	B	B
HCM 95th %tile Q(veh)	0	-	0.1	-	-	0.1	1.9

Intersection			
Int Delay, s/veh			

Movement	SBL	SBT	SBR
Vol, veh/h	20	0	270
Conflicting Peds, #/hr	0	0	0
Sign Control	Stop	Stop	Stop
RT Channelized	-	-	None
Storage Length	-	-	0
Veh in Median Storage, #	-	0	-
Grade, %	-	0	-
Peak Hour Factor	92	92	92
Heavy Vehicles, %	38	2	44
Mvmt Flow	22	0	293

Major/Minor	Minor2		
Conflicting Flow All	369	369	196
Stage 1	239	239	-
Stage 2	130	130	-
Critical Hdwy	6.78	6.52	6.64
Critical Hdwy Stg 1	5.78	5.52	-
Critical Hdwy Stg 2	5.78	5.52	-
Follow-up Hdwy	3.842	4.018	3.696
Pot Cap-1 Maneuver	566	560	749
Stage 1	723	708	-
Stage 2	814	789	-
Platoon blocked, %			
Mov Cap-1 Maneuver	556	0	749
Mov Cap-2 Maneuver	556	0	-
Stage 1	710	0	-
Stage 2	814	0	-

Approach	SB
HCM Control Delay, s	12.8
HCM LOS	B

Minor Lane/Major Mvmt

Intersection	
Int Delay, s/veh	4.8

Movement	EBL	EBT	EBR	WBL	WBT	WBR	NBL	NBT	NBR
Vol, veh/h	0	70	70	0	60	20	140	0	20
Conflicting Peds, #/hr	0	0	0	0	0	0	0	0	0
Sign Control	Free	Free	Free	Free	Free	Free	Stop	Stop	Stop
RT Channelized	-	-	None	-	-	None	-	-	None
Storage Length	-	-	-	-	-	-	0	-	0
Veh in Median Storage, #	-	0	-	-	0	-	-	0	-
Grade, %	-	0	-	-	0	-	-	0	-
Peak Hour Factor	86	86	86	86	86	86	86	86	86
Heavy Vehicles, %	38	38	38	44	44	44	44	2	2
Mvmt Flow	0	81	81	0	70	23	163	0	23

Major/Minor	Major1			Major2			Minor1		
Conflicting Flow All	93	0	0	163	0	0	203	215	122
Stage 1	-	-	-	-	-	-	122	122	-
Stage 2	-	-	-	-	-	-	81	93	-
Critical Hdwy	4.48	-	-	4.54	-	-	6.84	6.52	6.22
Critical Hdwy Stg 1	-	-	-	-	-	-	5.84	5.52	-
Critical Hdwy Stg 2	-	-	-	-	-	-	5.84	5.52	-
Follow-up Hdwy	2.542	-	-	2.596	-	-	3.896	4.018	3.318
Pot Cap-1 Maneuver	1303	-	-	1197	-	-	700	683	929
Stage 1	-	-	-	-	-	-	809	795	-
Stage 2	-	-	-	-	-	-	846	818	-
Platoon blocked, %		-	-		-	-			
Mov Cap-1 Maneuver	1303	-	-	1197	-	-	700	0	929
Mov Cap-2 Maneuver	-	-	-	-	-	-	700	0	-
Stage 1	-	-	-	-	-	-	809	0	-
Stage 2	-	-	-	-	-	-	846	0	-

Approach	EB	WB	NB
HCM Control Delay, s	0	0	11.4
HCM LOS			B

Minor Lane/Major Mvmt	NBLn1	NBLn2	EBL	EBT	EBR	WBL	WBT	WBR
Capacity (veh/h)	700	929	1303	-	-	1197	-	-
HCM Lane V/C Ratio	0.233	0.025	-	-	-	-	-	-
HCM Control Delay (s)	11.7	9	0	-	-	0	-	-
HCM Lane LOS	B	A	A	-	-	A	-	-
HCM 95th %tile Q(veh)	0.9	0.1	0	-	-	0	-	-

Intersection			
Int Delay, s/veh			

Movement	SBL	SBT	SBR
Vol, veh/h	0	0	0
Conflicting Peds, #/hr	0	0	0
Sign Control	Stop	Stop	Stop
RT Channelized	-	-	None
Storage Length	-	-	-
Veh in Median Storage, #	-	0	-
Grade, %	-	0	-
Peak Hour Factor	86	86	86
Heavy Vehicles, %	2	2	2
Mvmt Flow	0	0	0

Major/Minor
Conflicting Flow All
Stage 1
Stage 2
Critical Hdwy
Critical Hdwy Stg 1
Critical Hdwy Stg 2
Follow-up Hdwy
Pot Cap-1 Maneuver
Stage 1
Stage 2
Platoon blocked, %
Mov Cap-1 Maneuver
Mov Cap-2 Maneuver
Stage 1
Stage 2

Approach
HCM Control Delay, s
HCM LOS

Minor Lane/Major Mvmt

Intersection	
Int Delay, s/veh	826.6

Movement	EBL	EBT	WBT	WBR	SBL	SBR
Vol, veh/h	310	1290	860	180	60	160
Conflicting Peds, #/hr	0	0	0	0	0	0
Sign Control	Free	Free	Free	Free	Stop	Stop
RT Channelized	-	None	-	None	-	None
Storage Length	105	-	-	-	0	-
Veh in Median Storage, #	-	0	0	-	0	-
Grade, %	-	0	0	-	0	-
Peak Hour Factor	86	86	86	86	86	86
Heavy Vehicles, %	35	35	41	41	2	2
Mvmt Flow	360	1500	1000	209	70	186

Major/Minor	Major1		Major2		Minor2	
Conflicting Flow All	1209	0	-	0	2576	605
Stage 1	-	-	-	-	1105	-
Stage 2	-	-	-	-	1471	-
Critical Hdwy	4.8	-	-	-	6.84	6.94
Critical Hdwy Stg 1	-	-	-	-	5.84	-
Critical Hdwy Stg 2	-	-	-	-	5.84	-
Follow-up Hdwy	2.55	-	-	-	3.52	3.32
Pot Cap-1 Maneuver	419	-	-	-	~ 21	441
Stage 1	-	-	-	-	279	-
Stage 2	-	-	-	-	177	-
Platoon blocked, %		-	-	-		
Mov Cap-1 Maneuver	419	-	-	-	~ 3	441
Mov Cap-2 Maneuver	-	-	-	-	~ 3	-
Stage 1	-	-	-	-	279	-
Stage 2	-	-	-	-	~ 25	-

Approach	EB	WB	SB
HCM Control Delay, s	9.3	0	$ 10678.4
HCM LOS			F

Minor Lane/Major Mvmt	EBL	EBT	WBT	WBR	SBLn1
Capacity (veh/h)	419	-	-	-	11
HCM Lane V/C Ratio	0.86	-	-	-	23.256
HCM Control Delay (s)	47.8	-	-		$ 10678.4
HCM Lane LOS	E	-	-	-	F
HCM 95th %tile Q(veh)	8.5	-	-	-	33.5

Notes

~: Volume exceeds capacity $: Delay exceeds 300s +: Computation Not Defined *: All major volume in platoon

Intersection	
Int Delay, s/veh	316.4

Movement	EBT	EBR	WBL	WBT	NBL	NBR
Vol, veh/h	820	210	20	750	230	200
Conflicting Peds, #/hr	0	0	0	0	0	0
Sign Control	Free	Free	Free	Free	Stop	Stop
RT Channelized	-	None	-	None	-	None
Storage Length	-	-	-	-	0	-
Veh in Median Storage, #	0	-	-	0	0	-
Grade, %	0	-	-	0	0	-
Peak Hour Factor	90	90	90	90	90	90
Heavy Vehicles, %	35	35	41	41	2	2
Mvmt Flow	911	233	22	833	256	222

Major/Minor	Major1		Major2		Minor1	
Conflicting Flow All	0	0	1144	0	1906	1028
Stage 1	-	-	-	-	1028	-
Stage 2	-	-	-	-	878	-
Critical Hdwy	-	-	4.51	-	6.42	6.22
Critical Hdwy Stg 1	-	-	-	-	5.42	-
Critical Hdwy Stg 2	-	-	-	-	5.42	-
Follow-up Hdwy	-	-	2.569	-	3.518	3.318
Pot Cap-1 Maneuver	-	-	489	-	~ 75	284
Stage 1	-	-	-	-	345	-
Stage 2	-	-	-	-	406	-
Platoon blocked, %	-	-		-		
Mov Cap-1 Maneuver	-	-	489	-	~ 69	284
Mov Cap-2 Maneuver	-	-	-	-	~ 69	-
Stage 1	-	-	-	-	345	-
Stage 2	-	-	-	-	372	-

Approach	EB	WB	NB
HCM Control Delay, s	0	0.3	$ 1640.2
HCM LOS			F

Minor Lane/Major Mvmt	NBLn1	EBT	EBR	WBL	WBT
Capacity (veh/h)	107	-	-	489	-
HCM Lane V/C Ratio	4.465	-	-	0.045	-
HCM Control Delay (s)	$ 1640.2	-	-	12.7	0
HCM Lane LOS	F	-	-	B	A
HCM 95th %tile Q(veh)	49.9	-	-	0.1	-

Notes

~: Volume exceeds capacity $: Delay exceeds 300s +: Computation Not Defined *: All major volume in platoon

Intersection	
Int Delay, s/veh	4

Movement	EBL	EBT	WBT	WBR	SBL	SBR
Vol, veh/h	10	1010	750	10	20	30
Conflicting Peds, #/hr	0	0	0	0	0	0
Sign Control	Free	Free	Free	Free	Stop	Stop
RT Channelized	-	None	-	None	-	None
Storage Length	-	-	-	-	0	-
Veh in Median Storage, #	-	0	0	-	0	-
Grade, %	-	0	0	-	0	-
Peak Hour Factor	77	77	77	77	77	77
Heavy Vehicles, %	30	30	38	38	2	2
Mvmt Flow	13	1312	974	13	26	39

Major/Minor	Major1		Major2		Minor2	
Conflicting Flow All	987	0	-	0	2319	981
Stage 1	-	-	-	-	981	-
Stage 2	-	-	-	-	1338	-
Critical Hdwy	4.4	-	-	-	6.42	6.22
Critical Hdwy Stg 1	-	-	-	-	5.42	-
Critical Hdwy Stg 2	-	-	-	-	5.42	-
Follow-up Hdwy	2.47	-	-	-	3.518	3.318
Pot Cap-1 Maneuver	600	-	-	-	41	303
Stage 1	-	-	-	-	363	-
Stage 2	-	-	-	-	245	-
Platoon blocked, %		-	-	-		
Mov Cap-1 Maneuver	600	-	-	-	38	303
Mov Cap-2 Maneuver	-	-	-	-	38	-
Stage 1	-	-	-	-	363	-
Stage 2	-	-	-	-	225	-

Approach	EB	WB	SB
HCM Control Delay, s	0.1	0	142.7
HCM LOS			F

Minor Lane/Major Mvmt	EBL	EBT	WBT	WBR	SBLn1
Capacity (veh/h)	600	-	-	-	80
HCM Lane V/C Ratio	0.022	-	-	-	0.812
HCM Control Delay (s)	11.1	0	-	-	142.7
HCM Lane LOS	B	A	-	-	F
HCM 95th %tile Q(veh)	0.1	-	-	-	4.1

Intersection	
Int Delay, s/veh	15.1

Movement	EBL	EBT	WBT	WBR	SBL	SBR
Vol, veh/h	90	580	490	10	20	370
Conflicting Peds, #/hr	0	0	0	0	0	0
Sign Control	Free	Free	Free	Free	Stop	Stop
RT Channelized	-	None	-	None	-	None
Storage Length	-	-	-	-	0	-
Veh in Median Storage, #	-	0	0	-	0	-
Grade, %	-	0	0	-	0	-
Peak Hour Factor	90	90	90	90	90	90
Heavy Vehicles, %	30	30	38	38	2	2
Mvmt Flow	100	644	544	11	22	411

Major/Minor	Major1		Major2		Minor2	
Conflicting Flow All	556	0	-	0	1394	550
Stage 1	-	-	-	-	550	-
Stage 2	-	-	-	-	844	-
Critical Hdwy	4.4	-	-	-	6.42	6.22
Critical Hdwy Stg 1	-	-	-	-	5.42	-
Critical Hdwy Stg 2	-	-	-	-	5.42	-
Follow-up Hdwy	2.47	-	-	-	3.518	3.318
Pot Cap-1 Maneuver	889	-	-	-	156	535
Stage 1	-	-	-	-	578	-
Stage 2	-	-	-	-	422	-
Platoon blocked, %		-	-	-		
Mov Cap-1 Maneuver	889	-	-	-	129	535
Mov Cap-2 Maneuver	-	-	-	-	129	-
Stage 1	-	-	-	-	578	-
Stage 2	-	-	-	-	348	-

Approach	EB	WB	SB
HCM Control Delay, s	1.3	0	58.3
HCM LOS			F

Minor Lane/Major Mvmt	EBL	EBT	WBT	WBR	SBLn1
Capacity (veh/h)	889	-	-	-	461
HCM Lane V/C Ratio	0.112	-	-	-	0.94
HCM Control Delay (s)	9.6	0	-	-	58.3
HCM Lane LOS	A	A	-	-	F
HCM 95th %tile Q(veh)	0.4	-	-	-	11.1

Intersection	
Int Delay, s/veh	4.8

Movement	EBL	EBT	WBT	WBR	SBL	SBR
Vol, veh/h	280	320	340	10	10	150
Conflicting Peds, #/hr	0	0	0	0	0	0
Sign Control	Free	Free	Free	Free	Stop	Stop
RT Channelized	-	None	-	None	-	None
Storage Length	-	-	-	-	0	-
Veh in Median Storage, #	-	0	0	-	0	-
Grade, %	-	0	0	-	0	-
Peak Hour Factor	92	92	92	92	92	92
Heavy Vehicles, %	30	30	37	37	2	2
Mvmt Flow	304	348	370	11	11	163

Major/Minor	Major1		Major2		Minor2	
Conflicting Flow All	380	0	-	0	1332	375
Stage 1	-	-	-	-	375	-
Stage 2	-	-	-	-	957	-
Critical Hdwy	4.4	-	-	-	6.42	6.22
Critical Hdwy Stg 1	-	-	-	-	5.42	-
Critical Hdwy Stg 2	-	-	-	-	5.42	-
Follow-up Hdwy	2.47	-	-	-	3.518	3.318
Pot Cap-1 Maneuver	1041	-	-	-	170	671
Stage 1	-	-	-	-	695	-
Stage 2	-	-	-	-	373	-
Platoon blocked, %		-	-	-		
Mov Cap-1 Maneuver	1041	-	-	-	108	671
Mov Cap-2 Maneuver	-	-	-	-	108	-
Stage 1	-	-	-	-	695	-
Stage 2	-	-	-	-	238	-

Approach	EB	WB	SB
HCM Control Delay, s	4.6	0	15.8
HCM LOS			C

Minor Lane/Major Mvmt	EBL	EBT	WBT	WBR	SBLn1
Capacity (veh/h)	1041	-	-	-	506
HCM Lane V/C Ratio	0.292	-	-	-	0.344
HCM Control Delay (s)	9.9	0	-	-	15.8
HCM Lane LOS	A	A	-	-	C
HCM 95th %tile Q(veh)	1.2	-	-	-	1.5

Intersection	
Int Delay, s/veh	4.4

Movement	EBL	EBT	WBT	WBR	SBL	SBR
Vol, veh/h	10	330	340	210	140	10
Conflicting Peds, #/hr	0	0	0	0	0	0
Sign Control	Free	Free	Free	Free	Stop	Stop
RT Channelized	-	None	-	None	-	None
Storage Length	-	-	-	-	0	-
Veh in Median Storage, #	-	0	0	-	0	-
Grade, %	-	0	0	-	0	-
Peak Hour Factor	88	88	88	88	88	88
Heavy Vehicles, %	30	30	37	37	2	2
Mvmt Flow	11	375	386	239	159	11

Major/Minor	Major1		Major2		Minor2	
Conflicting Flow All	625	0	-	0	904	506
Stage 1	-	-	-	-	506	-
Stage 2	-	-	-	-	398	-
Critical Hdwy	4.4	-	-	-	6.42	6.22
Critical Hdwy Stg 1	-	-	-	-	5.42	-
Critical Hdwy Stg 2	-	-	-	-	5.42	-
Follow-up Hdwy	2.47	-	-	-	3.518	3.318
Pot Cap-1 Maneuver	835	-	-	-	307	566
Stage 1	-	-	-	-	606	-
Stage 2	-	-	-	-	678	-
Platoon blocked, %		-	-	-		
Mov Cap-1 Maneuver	835	-	-	-	302	566
Mov Cap-2 Maneuver	-	-	-	-	302	-
Stage 1	-	-	-	-	606	-
Stage 2	-	-	-	-	666	-

Approach	EB	WB	SB
HCM Control Delay, s	0.3	0	29.6
HCM LOS			D

Minor Lane/Major Mvmt	EBL	EBT	WBT	WBR	SBLn1
Capacity (veh/h)	835	-	-	-	312
HCM Lane V/C Ratio	0.014	-	-	-	0.546
HCM Control Delay (s)	9.4	0	-	-	29.6
HCM Lane LOS	A	A	-	-	D
HCM 95th %tile Q(veh)	0	-	-	-	3.1

Intersection	
Int Delay, s/veh	0.6

Movement	EBL	EBT	EBR	WBL	WBT	WBR	NBL	NBT	NBR
Vol, veh/h	10	440	70	110	480	20	380	340	90
Conflicting Peds, #/hr	0	0	0	0	0	0	0	0	0
Sign Control	Free	Free	Free	Free	Free	Free	Stop	Stop	Stop
RT Channelized	-	-	None	-	-	None	-	-	None
Storage Length	-	-	-	-	-	-	-	-	-
Veh in Median Storage, #	-	0	-	-	0	-	-	0	-
Grade, %	-	0	-	-	0	-	-	0	-
Peak Hour Factor	89	89	89	89	89	89	89	89	89
Heavy Vehicles, %	30	30	30	39	39	39	2	2	2
Mvmt Flow	11	494	79	124	539	22	427	382	101

Major/Minor	Major1			Major2			Minor1		
Conflicting Flow All	562	0	0	573	0	0	1449	1365	534
Stage 1	-	-	-	-	-	-	556	556	-
Stage 2	-	-	-	-	-	-	893	809	-
Critical Hdwy	4.4	-	-	4.49	-	-	7.12	6.52	6.22
Critical Hdwy Stg 1	-	-	-	-	-	-	6.12	5.52	-
Critical Hdwy Stg 2	-	-	-	-	-	-	6.12	5.52	-
Follow-up Hdwy	2.47	-	-	2.551	-	-	3.518	4.018	3.318
Pot Cap-1 Maneuver	884	-	-	840	-	-	~ 109	~ 147	546
Stage 1	-	-	-	-	-	-	515	513	-
Stage 2	-	-	-	-	-	-	~ 336	394	-
Platoon blocked, %		-	-		-	-			
Mov Cap-1 Maneuver	884	-	-	840	-	-	-	~ 113	546
Mov Cap-2 Maneuver	-	-	-	-	-	-	-	~ 113	-
Stage 1	-	-	-	-	-	-	506	504	-
Stage 2	-	-	-	-	-	-	~ 116	~ 309	-

Approach	EB	WB	NB
HCM Control Delay, s	0.2	1.8	
HCM LOS			-

Minor Lane/Major Mvmt	NBLn1	EBL	EBT	EBR	WBL	WBT	WBR	SBLn1
Capacity (veh/h)	-	884	-	-	840	-	-	-
HCM Lane V/C Ratio	-	0.013	-	-	0.147	-	-	-
HCM Control Delay (s)	-	9.1	0	-	10	0	-	-
HCM Lane LOS	-	A	A	-	B	A	-	-
HCM 95th %tile Q(veh)	-	0	-	-	0.5	-	-	-

Notes

~: Volume exceeds capacity $: Delay exceeds 300s +: Computation Not Defined *: All major volume in platoon

Intersection			
Int Delay, s/veh			

Movement	SBL	SBT	SBR
Vol, veh/h	10	150	20
Conflicting Peds, #/hr	0	0	0
Sign Control	Stop	Stop	Stop
RT Channelized	-	-	None
Storage Length	-	-	-
Veh in Median Storage, #	-	0	-
Grade, %	-	0	-
Peak Hour Factor	89	89	89
Heavy Vehicles, %	2	2	2
Mvmt Flow	11	169	22

Major/Minor	Minor2		
Conflicting Flow All	1596	1394	551
Stage 1	798	798	-
Stage 2	798	596	-
Critical Hdwy	7.12	6.52	6.22
Critical Hdwy Stg 1	6.12	5.52	-
Critical Hdwy Stg 2	6.12	5.52	-
Follow-up Hdwy	3.518	4.018	3.318
Pot Cap-1 Maneuver	86	~ 141	534
Stage 1	380	398	-
Stage 2	380	492	-
Platoon blocked, %			
Mov Cap-1 Maneuver	-	~ 109	534
Mov Cap-2 Maneuver	-	~ 109	-
Stage 1	373	312	-
Stage 2	74	483	-

Approach	SB
HCM Control Delay, s	
HCM LOS	-

Minor Lane/Major Mvmt

Intersection	
Int Delay, s/veh	5.7

Movement	EBL	EBT	WBT	WBR	SBL	SBR
Vol, veh/h	20	500	590	240	120	10
Conflicting Peds, #/hr	0	0	0	0	0	0
Sign Control	Free	Free	Free	Free	Stop	Stop
RT Channelized	-	None	-	None	-	None
Storage Length	-	-	-	-	0	-
Veh in Median Storage, #	-	0	0	-	0	-
Grade, %	-	0	0	-	0	-
Peak Hour Factor	98	98	98	98	98	98
Heavy Vehicles, %	30	30	39	39	2	2
Mvmt Flow	20	510	602	245	122	10

Major/Minor	Major1		Major2		Minor2	
Conflicting Flow All	847	0	-	0	1275	724
Stage 1	-	-	-	-	724	-
Stage 2	-	-	-	-	551	-
Critical Hdwy	4.4	-	-	-	6.42	6.22
Critical Hdwy Stg 1	-	-	-	-	5.42	-
Critical Hdwy Stg 2	-	-	-	-	5.42	-
Follow-up Hdwy	2.47	-	-	-	3.518	3.318
Pot Cap-1 Maneuver	683	-	-	-	184	426
Stage 1	-	-	-	-	480	-
Stage 2	-	-	-	-	577	-
Platoon blocked, %		-	-	-		
Mov Cap-1 Maneuver	683	-	-	-	176	426
Mov Cap-2 Maneuver	-	-	-	-	176	-
Stage 1	-	-	-	-	480	-
Stage 2	-	-	-	-	553	-

Approach	EB	WB	SB
HCM Control Delay, s	0.4	0	63.2
HCM LOS			F

Minor Lane/Major Mvmt	EBL	EBT	WBT	WBR	SBLn1
Capacity (veh/h)	683	-	-	-	184
HCM Lane V/C Ratio	0.03	-	-	-	0.721
HCM Control Delay (s)	10.4	0	-	-	63.2
HCM Lane LOS	B	A	-	-	F
HCM 95th %tile Q(veh)	0.1	-	-	-	4.5

Intersection	
Int Delay, s/veh	0.7

Movement	EBL	EBT	WBT	WBR	SBL	SBR
Vol, veh/h	20	540	520	50	20	10
Conflicting Peds, #/hr	0	0	0	0	0	0
Sign Control	Free	Free	Free	Free	Stop	Stop
RT Channelized	-	None	-	None	-	None
Storage Length	-	-	-	-	0	-
Veh in Median Storage, #	-	0	0	-	0	-
Grade, %	-	0	0	-	0	-
Peak Hour Factor	93	93	93	93	93	93
Heavy Vehicles, %	33	33	41	41	2	2
Mvmt Flow	22	581	559	54	22	11

Major/Minor	Major1		Major2		Minor2	
Conflicting Flow All	613	0	-	0	1210	586
Stage 1	-	-	-	-	586	-
Stage 2	-	-	-	-	624	-
Critical Hdwy	4.43	-	-	-	6.42	6.22
Critical Hdwy Stg 1	-	-	-	-	5.42	-
Critical Hdwy Stg 2	-	-	-	-	5.42	-
Follow-up Hdwy	2.497	-	-	-	3.518	3.318
Pot Cap-1 Maneuver	832	-	-	-	202	510
Stage 1	-	-	-	-	556	-
Stage 2	-	-	-	-	534	-
Platoon blocked, %		-	-	-		
Mov Cap-1 Maneuver	832	-	-	-	194	510
Mov Cap-2 Maneuver	-	-	-	-	194	-
Stage 1	-	-	-	-	556	-
Stage 2	-	-	-	-	513	-

Approach	EB	WB	SB
HCM Control Delay, s	0.3	0	22
HCM LOS			C

Minor Lane/Major Mvmt	EBL	EBT	WBT	WBR	SBLn1
Capacity (veh/h)	832	-	-	-	244
HCM Lane V/C Ratio	0.026	-	-	-	0.132
HCM Control Delay (s)	9.4	0	-	-	22
HCM Lane LOS	A	A	-	-	C
HCM 95th %tile Q(veh)	0.1	-	-	-	0.4

Intersection	
Int Delay, s/veh	18.5

Movement	EBL	EBT	EBR	WBL	WBT	WBR	NBL	NBT	NBR
Vol, veh/h	10	530	40	60	410	10	110	10	60
Conflicting Peds, #/hr	0	0	0	0	0	0	0	0	0
Sign Control	Free	Free	Free	Free	Free	Free	Stop	Stop	Stop
RT Channelized	-	-	None	-	-	None	-	-	None
Storage Length	-	-	-	-	-	-	-	-	-
Veh in Median Storage, #	-	0	-	-	0	-	-	0	-
Grade, %	-	0	-	-	0	-	-	0	-
Peak Hour Factor	94	94	94	94	94	94	94	94	94
Heavy Vehicles, %	33	33	33	41	41	41	2	2	2
Mvmt Flow	11	564	43	64	436	11	117	11	64

Major/Minor	Major1			Major2			Minor1		
Conflicting Flow All	447	0	0	606	0	0	1186	1180	585
Stage 1	-	-	-	-	-	-	606	606	-
Stage 2	-	-	-	-	-	-	580	574	-
Critical Hdwy	4.43	-	-	4.51	-	-	7.12	6.52	6.22
Critical Hdwy Stg 1	-	-	-	-	-	-	6.12	5.52	-
Critical Hdwy Stg 2	-	-	-	-	-	-	6.12	5.52	-
Follow-up Hdwy	2.497	-	-	2.569	-	-	3.518	4.018	3.318
Pot Cap-1 Maneuver	967	-	-	808	-	-	166	190	511
Stage 1	-	-	-	-	-	-	484	487	-
Stage 2	-	-	-	-	-	-	500	503	-
Platoon blocked, %		-	-		-	-			
Mov Cap-1 Maneuver	967	-	-	808	-	-	141	167	511
Mov Cap-2 Maneuver	-	-	-	-	-	-	141	167	-
Stage 1	-	-	-	-	-	-	476	479	-
Stage 2	-	-	-	-	-	-	429	450	-

Approach	EB	WB	NB
HCM Control Delay, s	0.2	1.2	122.1
HCM LOS			F

Minor Lane/Major Mvmt	NBLn1	EBL	EBT	EBR	WBL	WBT	WBR	SBLn1
Capacity (veh/h)	188	967	-	-	808	-	-	186
HCM Lane V/C Ratio	1.019	0.011	-	-	0.079	-	-	0.172
HCM Control Delay (s)	122.1	8.8	0	-	9.8	0	-	28.3
HCM Lane LOS	F	A	A	-	A	A	-	D
HCM 95th %tile Q(veh)	8.7	0	-	-	0.3	-	-	0.6

Intersection			
Int Delay, s/veh			

Movement	SBL	SBT	SBR
Vol, veh/h	10	10	10
Conflicting Peds, #/hr	0	0	0
Sign Control	Stop	Stop	Stop
RT Channelized	-	-	None
Storage Length	-	-	-
Veh in Median Storage, #	-	0	-
Grade, %	-	0	-
Peak Hour Factor	94	94	94
Heavy Vehicles, %	2	2	2
Mvmt Flow	11	11	11

Major/Minor	Minor2		
Conflicting Flow All	1213	1197	441
Stage 1	569	569	-
Stage 2	644	628	-
Critical Hdwy	7.12	6.52	6.22
Critical Hdwy Stg 1	6.12	5.52	-
Critical Hdwy Stg 2	6.12	5.52	-
Follow-up Hdwy	3.518	4.018	3.318
Pot Cap-1 Maneuver	159	186	616
Stage 1	507	506	-
Stage 2	461	476	-
Platoon blocked, %			
Mov Cap-1 Maneuver	120	163	616
Mov Cap-2 Maneuver	120	163	-
Stage 1	498	452	-
Stage 2	388	468	-

Approach	SB
HCM Control Delay, s	28.3
HCM LOS	D

Minor Lane/Major Mvmt

Intersection	
Int Delay, s/veh	2.7

Movement	EBL	EBT	EBR	WBL	WBT	WBR	NBL	NBT	NBR
Vol, veh/h	10	570	10	10	420	50	10	10	10
Conflicting Peds, #/hr	0	0	0	0	0	0	0	0	0
Sign Control	Free	Free	Free	Free	Free	Free	Stop	Stop	Stop
RT Channelized	-	-	None	-	-	None	-	-	None
Storage Length	-	-	-	-	-	-	-	-	-
Veh in Median Storage, #	-	0	-	-	0	-	-	0	-
Grade, %	-	0	-	-	0	-	-	0	-
Peak Hour Factor	78	78	78	78	78	78	78	78	78
Heavy Vehicles, %	31	31	31	39	39	39	2	2	2
Mvmt Flow	13	731	13	13	538	64	13	13	13

Major/Minor	Major1			Major2			Minor1		
Conflicting Flow All	603	0	0	744	0	0	1372	1391	737
Stage 1	-	-	-	-	-	-	763	763	-
Stage 2	-	-	-	-	-	-	609	628	-
Critical Hdwy	4.41	-	-	4.49	-	-	7.12	6.52	6.22
Critical Hdwy Stg 1	-	-	-	-	-	-	6.12	5.52	-
Critical Hdwy Stg 2	-	-	-	-	-	-	6.12	5.52	-
Follow-up Hdwy	2.479	-	-	2.551	-	-	3.518	4.018	3.318
Pot Cap-1 Maneuver	848	-	-	718	-	-	123	142	418
Stage 1	-	-	-	-	-	-	397	413	-
Stage 2	-	-	-	-	-	-	482	476	-
Platoon blocked, %		-	-		-	-			
Mov Cap-1 Maneuver	848	-	-	718	-	-	107	134	418
Mov Cap-2 Maneuver	-	-	-	-	-	-	107	134	-
Stage 1	-	-	-	-	-	-	387	402	-
Stage 2	-	-	-	-	-	-	445	463	-

Approach	EB	WB	NB
HCM Control Delay, s	0.2	0.2	35.5
HCM LOS			E

Minor Lane/Major Mvmt	NBLn1	EBL	EBT	EBR	WBL	WBT	WBR	SBLn1
Capacity (veh/h)	156	848	-	-	718	-	-	143
HCM Lane V/C Ratio	0.247	0.015	-	-	0.018	-	-	0.359
HCM Control Delay (s)	35.5	9.3	0	-	10.1	0	-	43.6
HCM Lane LOS	E	A	A	-	B	A	-	E
HCM 95th %tile Q(veh)	0.9	0	-	-	0.1	-	-	1.5

Intersection			
Int Delay, s/veh			

Movement	SBL	SBT	SBR
Vol, veh/h	20	10	10
Conflicting Peds, #/hr	0	0	0
Sign Control	Stop	Stop	Stop
RT Channelized	-	-	None
Storage Length	-	-	-
Veh in Median Storage, #	-	0	-
Grade, %	-	0	-
Peak Hour Factor	78	78	78
Heavy Vehicles, %	2	2	2
Mvmt Flow	26	13	13

Major/Minor	Minor2		
Conflicting Flow All	1372	1365	571
Stage 1	596	596	-
Stage 2	776	769	-
Critical Hdwy	7.12	6.52	6.22
Critical Hdwy Stg 1	6.12	5.52	-
Critical Hdwy Stg 2	6.12	5.52	-
Follow-up Hdwy	3.518	4.018	3.318
Pot Cap-1 Maneuver	123	147	520
Stage 1	490	492	-
Stage 2	390	411	-
Platoon blocked, %			
Mov Cap-1 Maneuver	106	139	520
Mov Cap-2 Maneuver	106	139	-
Stage 1	477	478	-
Stage 2	356	400	-

Approach	SB
HCM Control Delay, s	43.6
HCM LOS	E

Minor Lane/Major Mvmt

Intersection	
Int Delay, s/veh	17.7

Movement	EBL	EBT	EBR	WBL	WBT	WBR	NBL	NBT	NBR
Vol, veh/h	50	510	40	10	330	130	50	20	10
Conflicting Peds, #/hr	0	0	0	0	0	0	0	0	0
Sign Control	Free	Free	Free	Free	Free	Free	Stop	Stop	Stop
RT Channelized	-	-	None	-	-	None	-	-	None
Storage Length	-	-	-	-	-	-	-	-	-
Veh in Median Storage, #	-	0	-	-	0	-	-	0	-
Grade, %	-	0	-	-	0	-	-	0	-
Peak Hour Factor	89	89	89	89	89	89	89	89	89
Heavy Vehicles, %	31	31	31	39	39	39	2	2	2
Mvmt Flow	56	573	45	11	371	146	56	22	11

Major/Minor	Major1			Major2			Minor1		
Conflicting Flow All	517	0	0	618	0	0	1259	1247	596
Stage 1	-	-	-	-	-	-	708	708	-
Stage 2	-	-	-	-	-	-	551	539	-
Critical Hdwy	4.41	-	-	4.49	-	-	7.12	6.52	6.22
Critical Hdwy Stg 1	-	-	-	-	-	-	6.12	5.52	-
Critical Hdwy Stg 2	-	-	-	-	-	-	6.12	5.52	-
Follow-up Hdwy	2.479	-	-	2.551	-	-	3.518	4.018	3.318
Pot Cap-1 Maneuver	916	-	-	806	-	-	147	173	504
Stage 1	-	-	-	-	-	-	426	438	-
Stage 2	-	-	-	-	-	-	519	522	-
Platoon blocked, %		-	-		-	-			
Mov Cap-1 Maneuver	916	-	-	806	-	-	92	154	504
Mov Cap-2 Maneuver	-	-	-	-	-	-	92	154	-
Stage 1	-	-	-	-	-	-	386	397	-
Stage 2	-	-	-	-	-	-	372	512	-

Approach	EB	WB	NB
HCM Control Delay, s	0.8	0.2	103
HCM LOS			F

Minor Lane/Major Mvmt	NBLn1	EBL	EBT	EBR	WBL	WBT	WBR	SBLn1
Capacity (veh/h)	115	916	-	-	806	-	-	264
HCM Lane V/C Ratio	0.782	0.061	-	-	0.014	-	-	0.894
HCM Control Delay (s)	103	9.2	0	-	9.5	0	-	72.6
HCM Lane LOS	F	A	A	-	A	A	-	F
HCM 95th %tile Q(veh)	4.4	0.2	-	-	0	-	-	7.8

Intersection			
Int Delay, s/veh			

Movement	SBL	SBT	SBR
Vol, veh/h	60	20	130
Conflicting Peds, #/hr	0	0	0
Sign Control	Stop	Stop	Stop
RT Channelized	-	-	None
Storage Length	-	-	-
Veh in Median Storage, #	-	0	-
Grade, %	-	0	-
Peak Hour Factor	89	89	89
Heavy Vehicles, %	2	2	2
Mvmt Flow	67	22	146

Major/Minor	Minor2		
Conflicting Flow All	1191	1196	444
Stage 1	466	466	-
Stage 2	725	730	-
Critical Hdwy	7.12	6.52	6.22
Critical Hdwy Stg 1	6.12	5.52	-
Critical Hdwy Stg 2	6.12	5.52	-
Follow-up Hdwy	3.518	4.018	3.318
Pot Cap-1 Maneuver	164	186	614
Stage 1	577	562	-
Stage 2	416	428	-
Platoon blocked, %			
Mov Cap-1 Maneuver	130	165	614
Mov Cap-2 Maneuver	130	165	-
Stage 1	523	551	-
Stage 2	348	388	-

Approach	SB
HCM Control Delay, s	72.6
HCM LOS	F

Minor Lane/Major Mvmt

Intersection	
Int Delay, s/veh	2.6

Movement	EBL	EBT	EBR	WBL	WBT	WBR	NBL	NBT	NBR
Vol, veh/h	10	560	10	10	490	60	10	10	10
Conflicting Peds, #/hr	0	0	0	0	0	0	0	0	0
Sign Control	Free	Free	Free	Free	Free	Free	Stop	Stop	Stop
RT Channelized	-	-	None	-	-	None	-	-	None
Storage Length	-	-	-	-	-	-	-	-	-
Veh in Median Storage, #	-	0	-	-	0	-	-	0	-
Grade, %	-	0	-	-	0	-	-	0	-
Peak Hour Factor	95	95	95	95	95	95	95	95	95
Heavy Vehicles, %	29	29	29	36	36	36	2	2	2
Mvmt Flow	11	589	11	11	516	63	11	11	11

Major/Minor	Major1			Major2			Minor1		
Conflicting Flow All	579	0	0	600	0	0	1195	1216	595
Stage 1	-	-	-	-	-	-	616	616	-
Stage 2	-	-	-	-	-	-	579	600	-
Critical Hdwy	4.39	-	-	4.46	-	-	7.12	6.52	6.22
Critical Hdwy Stg 1	-	-	-	-	-	-	6.12	5.52	-
Critical Hdwy Stg 2	-	-	-	-	-	-	6.12	5.52	-
Follow-up Hdwy	2.461	-	-	2.524	-	-	3.518	4.018	3.318
Pot Cap-1 Maneuver	874	-	-	831	-	-	163	181	504
Stage 1	-	-	-	-	-	-	478	482	-
Stage 2	-	-	-	-	-	-	501	490	-
Platoon blocked, %		-	-		-	-			
Mov Cap-1 Maneuver	874	-	-	831	-	-	148	174	504
Mov Cap-2 Maneuver	-	-	-	-	-	-	148	174	-
Stage 1	-	-	-	-	-	-	469	473	-
Stage 2	-	-	-	-	-	-	471	480	-

Approach	EB	WB	NB
HCM Control Delay, s	0.2	0.2	25.5
HCM LOS			D

Minor Lane/Major Mvmt	NBLn1	EBL	EBT	EBR	WBL	WBT	WBR	SBLn1
Capacity (veh/h)	207	874	-	-	831	-	-	174
HCM Lane V/C Ratio	0.153	0.012	-	-	0.013	-	-	0.363
HCM Control Delay (s)	25.5	9.2	0	-	9.4	0	-	37
HCM Lane LOS	D	A	A	-	A	A	-	E
HCM 95th %tile Q(veh)	0.5	0	-	-	0	-	-	1.5

Intersection			
Int Delay, s/veh			

Movement	SBL	SBT	SBR
Vol, veh/h	40	10	10
Conflicting Peds, #/hr	0	0	0
Sign Control	Stop	Stop	Stop
RT Channelized	-	-	None
Storage Length	-	-	-
Veh in Median Storage, #	-	0	-
Grade, %	-	0	-
Peak Hour Factor	95	95	95
Heavy Vehicles, %	2	2	2
Mvmt Flow	42	11	11

Major/Minor	Minor2		
Conflicting Flow All	1194	1189	547
Stage 1	568	568	-
Stage 2	626	621	-
Critical Hdwy	7.12	6.52	6.22
Critical Hdwy Stg 1	6.12	5.52	-
Critical Hdwy Stg 2	6.12	5.52	-
Follow-up Hdwy	3.518	4.018	3.318
Pot Cap-1 Maneuver	163	188	537
Stage 1	508	506	-
Stage 2	472	479	-
Platoon blocked, %			
Mov Cap-1 Maneuver	148	181	537
Mov Cap-2 Maneuver	148	181	-
Stage 1	498	496	-
Stage 2	443	470	-

Approach	SB
HCM Control Delay, s	37
HCM LOS	E

Minor Lane/Major Mvmt

Intersection	
Int Delay, s/veh	49.5

Movement	EBL	EBT	EBR	WBL	WBT	WBR	NBL	NBT	NBR
Vol, veh/h	50	540	10	10	500	40	20	80	20
Conflicting Peds, #/hr	0	0	0	0	0	0	0	0	0
Sign Control	Free	Free	Free	Free	Free	Free	Stop	Stop	Stop
RT Channelized	-	-	None	-	-	None	-	-	None
Storage Length	-	-	-	-	-	-	-	-	-
Veh in Median Storage, #	-	0	-	-	0	-	-	0	-
Grade, %	-	0	-	-	0	-	-	0	-
Peak Hour Factor	86	86	86	86	86	86	86	86	86
Heavy Vehicles, %	29	29	29	36	36	36	2	2	2
Mvmt Flow	58	628	12	12	581	47	23	93	23

Major/Minor	Major1			Major2			Minor1		
Conflicting Flow All	628	0	0	640	0	0	1419	1401	634
Stage 1	-	-	-	-	-	-	750	750	-
Stage 2	-	-	-	-	-	-	669	651	-
Critical Hdwy	4.39	-	-	4.46	-	-	7.12	6.52	6.22
Critical Hdwy Stg 1	-	-	-	-	-	-	6.12	5.52	-
Critical Hdwy Stg 2	-	-	-	-	-	-	6.12	5.52	-
Follow-up Hdwy	2.461	-	-	2.524	-	-	3.518	4.018	3.318
Pot Cap-1 Maneuver	837	-	-	801	-	-	114	140	479
Stage 1	-	-	-	-	-	-	403	419	-
Stage 2	-	-	-	-	-	-	447	465	-
Platoon blocked, %		-	-		-	-			
Mov Cap-1 Maneuver	837	-	-	801	-	-	57	122	479
Mov Cap-2 Maneuver	-	-	-	-	-	-	57	122	-
Stage 1	-	-	-	-	-	-	359	374	-
Stage 2	-	-	-	-	-	-	363	454	-

Approach	EB	WB	NB
HCM Control Delay, s	0.8	0.2	228.2
HCM LOS			F

Minor Lane/Major Mvmt	NBLn1	EBL	EBT	EBR	WBL	WBT	WBR	SBLn1
Capacity (veh/h)	114	837	-	-	801	-	-	75
HCM Lane V/C Ratio	1.224	0.069	-	-	0.015	-	-	1.55
HCM Control Delay (s)	228.2	9.6	0	-	9.6	0	-	$ 397.8
HCM Lane LOS	F	A	A	-	A	A	-	F
HCM 95th %tile Q(veh)	9	0.2	-	-	0	-	-	9.7

Notes

~: Volume exceeds capacity $: Delay exceeds 300s +: Computation Not Defined *: All major volume in platoon

Intersection			
Int Delay, s/veh			

Movement	SBL	SBT	SBR
Vol, veh/h	30	60	10
Conflicting Peds, #/hr	0	0	0
Sign Control	Stop	Stop	Stop
RT Channelized	-	-	None
Storage Length	-	-	-
Veh in Median Storage, #	-	0	-
Grade, %	-	0	-
Peak Hour Factor	86	86	86
Heavy Vehicles, %	2	2	2
Mvmt Flow	35	70	12

Major/Minor	Minor2		
Conflicting Flow All	1436	1384	605
Stage 1	628	628	-
Stage 2	808	756	-
Critical Hdwy	7.12	6.52	6.22
Critical Hdwy Stg 1	6.12	5.52	-
Critical Hdwy Stg 2	6.12	5.52	-
Follow-up Hdwy	3.518	4.018	3.318
Pot Cap-1 Maneuver	111	143	498
Stage 1	471	476	-
Stage 2	375	416	-
Platoon blocked, %			
Mov Cap-1 Maneuver	36	125	498
Mov Cap-2 Maneuver	36	125	-
Stage 1	420	465	-
Stage 2	239	371	-

Approach	SB
HCM Control Delay, s	$ 397.8
HCM LOS	F

Minor Lane/Major Mvmt

Intersection	
Int Delay, s/veh	2

Movement	EBL	EBT	EBR	WBL	WBT	WBR	NBL	NBT	NBR
Vol, veh/h	10	580	10	10	560	10	10	10	10
Conflicting Peds, #/hr	0	0	0	10	0	0	0	0	0
Sign Control	Free	Free	Free	Free	Free	Free	Stop	Stop	Stop
RT Channelized	-	-	None	-	-	None	-	-	None
Storage Length	-	-	-	-	-	-	-	-	-
Veh in Median Storage, #	-	0	-	-	0	-	-	0	-
Grade, %	-	0	-	-	0	-	-	0	-
Peak Hour Factor	84	84	84	84	84	84	84	84	84
Heavy Vehicles, %	29	29	29	36	36	36	2	2	2
Mvmt Flow	12	690	12	12	667	12	12	12	12

Major/Minor	Major1			Major2			Minor1		
Conflicting Flow All	679	0	0	702	0	0	1428	1422	706
Stage 1	-	-	-	-	-	-	720	720	-
Stage 2	-	-	-	-	-	-	708	702	-
Critical Hdwy	4.39	-	-	4.46	-	-	7.12	6.52	6.22
Critical Hdwy Stg 1	-	-	-	-	-	-	6.12	5.52	-
Critical Hdwy Stg 2	-	-	-	-	-	-	6.12	5.52	-
Follow-up Hdwy	2.461	-	-	2.524	-	-	3.518	4.018	3.318
Pot Cap-1 Maneuver	799	-	-	757	-	-	113	136	436
Stage 1	-	-	-	-	-	-	419	432	-
Stage 2	-	-	-	-	-	-	426	440	-
Platoon blocked, %		-	-		-	-			
Mov Cap-1 Maneuver	799	-	-	751	-	-	98	129	432
Mov Cap-2 Maneuver	-	-	-	-	-	-	98	129	-
Stage 1	-	-	-	-	-	-	409	421	-
Stage 2	-	-	-	-	-	-	393	429	-

Approach	EB	WB	NB
HCM Control Delay, s	0.2	0.2	36.9
HCM LOS			E

Minor Lane/Major Mvmt	NBLn1	EBL	EBT	EBR	WBL	WBT	WBR	SBLn1
Capacity (veh/h)	148	799	-	-	751	-	-	148
HCM Lane V/C Ratio	0.241	0.015	-	-	0.016	-	-	0.241
HCM Control Delay (s)	36.9	9.6	0	-	9.9	0	-	36.9
HCM Lane LOS	E	A	A	-	A	A	-	E
HCM 95th %tile Q(veh)	0.9	0	-	-	0	-	-	0.9

Intersection			
Int Delay, s/veh			

Movement	SBL	SBT	SBR
Vol, veh/h	10	10	10
Conflicting Peds, #/hr	0	0	0
Sign Control	Stop	Stop	Stop
RT Channelized	-	-	None
Storage Length	-	-	-
Veh in Median Storage, #	-	0	-
Grade, %	-	0	-
Peak Hour Factor	84	84	84
Heavy Vehicles, %	2	2	2
Mvmt Flow	12	12	12

Major/Minor	Minor2		
Conflicting Flow All	1428	1422	673
Stage 1	696	696	-
Stage 2	732	726	-
Critical Hdwy	7.12	6.52	6.22
Critical Hdwy Stg 1	6.12	5.52	-
Critical Hdwy Stg 2	6.12	5.52	-
Follow-up Hdwy	3.518	4.018	3.318
Pot Cap-1 Maneuver	113	136	455
Stage 1	432	443	-
Stage 2	413	430	-
Platoon blocked, %			
Mov Cap-1 Maneuver	97	129	455
Mov Cap-2 Maneuver	97	129	-
Stage 1	421	431	-
Stage 2	377	419	-

Approach	SB
HCM Control Delay, s	36.9
HCM LOS	E

Minor Lane/Major Mvmt

Intersection	
Int Delay, s/veh	4.6

Movement	EBL	EBT	EBR	WBL	WBT	WBR	NBL	NBT	NBR
Vol, veh/h	10	570	10	10	500	20	70	20	10
Conflicting Peds, #/hr	0	0	0	0	0	0	0	0	0
Sign Control	Free	Free	Free	Free	Free	Free	Stop	Stop	Stop
RT Channelized	-	-	None	-	-	None	-	-	None
Storage Length	-	-	-	-	-	-	-	-	-
Veh in Median Storage, #	-	0	-	-	0	-	-	0	-
Grade, %	-	0	-	-	0	-	-	0	-
Peak Hour Factor	99	99	99	99	99	99	99	99	99
Heavy Vehicles, %	26	26	26	36	36	36	2	2	2
Mvmt Flow	10	576	10	10	505	20	71	20	10

Major/Minor	Major1			Major2			Minor1		
Conflicting Flow All	525	0	0	586	0	0	1146	1146	581
Stage 1	-	-	-	-	-	-	601	601	-
Stage 2	-	-	-	-	-	-	545	545	-
Critical Hdwy	4.36	-	-	4.46	-	-	7.12	6.52	6.22
Critical Hdwy Stg 1	-	-	-	-	-	-	6.12	5.52	-
Critical Hdwy Stg 2	-	-	-	-	-	-	6.12	5.52	-
Follow-up Hdwy	2.434	-	-	2.524	-	-	3.518	4.018	3.318
Pot Cap-1 Maneuver	930	-	-	842	-	-	176	199	514
Stage 1	-	-	-	-	-	-	487	489	-
Stage 2	-	-	-	-	-	-	523	519	-
Platoon blocked, %		-	-		-	-			
Mov Cap-1 Maneuver	930	-	-	842	-	-	162	192	514
Mov Cap-2 Maneuver	-	-	-	-	-	-	162	192	-
Stage 1	-	-	-	-	-	-	479	481	-
Stage 2	-	-	-	-	-	-	495	510	-

Approach	EB	WB	NB
HCM Control Delay, s	0.2	0.2	47.9
HCM LOS			E

Minor Lane/Major Mvmt	NBLn1	EBL	EBT	EBR	WBL	WBT	WBR	SBLn1
Capacity (veh/h)	180	930	-	-	842	-	-	223
HCM Lane V/C Ratio	0.561	0.011	-	-	0.012	-	-	0.136
HCM Control Delay (s)	47.9	8.9	0	-	9.3	0	-	23.7
HCM Lane LOS	E	A	A	-	A	A	-	C
HCM 95th %tile Q(veh)	3	0	-	-	0	-	-	0.5

Intersection	
Int Delay, s/veh	

Movement	SBL	SBT	SBR
Vol, veh/h	10	10	10
Conflicting Peds, #/hr	0	0	0
Sign Control	Stop	Stop	Stop
RT Channelized	-	-	None
Storage Length	-	-	-
Veh in Median Storage, #	-	0	-
Grade, %	-	0	-
Peak Hour Factor	99	99	99
Heavy Vehicles, %	2	2	2
Mvmt Flow	10	10	10

Major/Minor	Minor2		
Conflicting Flow All	1151	1141	515
Stage 1	535	535	-
Stage 2	616	606	-
Critical Hdwy	7.12	6.52	6.22
Critical Hdwy Stg 1	6.12	5.52	-
Critical Hdwy Stg 2	6.12	5.52	-
Follow-up Hdwy	3.518	4.018	3.318
Pot Cap-1 Maneuver	175	201	560
Stage 1	529	524	-
Stage 2	478	487	-
Platoon blocked, %			
Mov Cap-1 Maneuver	154	194	560
Mov Cap-2 Maneuver	154	194	-
Stage 1	521	515	-
Stage 2	442	479	-

Approach	SB
HCM Control Delay, s	23.7
HCM LOS	C

Minor Lane/Major Mvmt

Intersection	
Int Delay, s/veh	1.5

Movement	EBL	EBT	EBR	WBL	WBT	WBR	NBL	NBT	NBR
Vol, veh/h	10	600	10	10	540	20	10	10	10
Conflicting Peds, #/hr	0	0	0	0	0	0	0	0	0
Sign Control	Free	Free	Free	Free	Free	Free	Stop	Stop	Stop
RT Channelized	-	-	None	-	-	None	-	-	None
Storage Length	-	-	-	-	-	-	-	-	-
Veh in Median Storage, #	-	0	-	-	0	-	-	0	-
Grade, %	-	0	-	-	0	-	-	0	-
Peak Hour Factor	94	94	94	94	94	94	94	94	94
Heavy Vehicles, %	26	26	26	36	36	36	2	2	2
Mvmt Flow	11	638	11	11	574	21	11	11	11

Major/Minor	Major1			Major2			Minor1		
Conflicting Flow All	596	0	0	649	0	0	1282	1282	644
Stage 1	-	-	-	-	-	-	665	665	-
Stage 2	-	-	-	-	-	-	617	617	-
Critical Hdwy	4.36	-	-	4.46	-	-	7.12	6.52	6.22
Critical Hdwy Stg 1	-	-	-	-	-	-	6.12	5.52	-
Critical Hdwy Stg 2	-	-	-	-	-	-	6.12	5.52	-
Follow-up Hdwy	2.434	-	-	2.524	-	-	3.518	4.018	3.318
Pot Cap-1 Maneuver	873	-	-	794	-	-	142	165	473
Stage 1	-	-	-	-	-	-	449	458	-
Stage 2	-	-	-	-	-	-	477	481	-
Platoon blocked, %		-	-		-	-			
Mov Cap-1 Maneuver	873	-	-	794	-	-	128	158	473
Mov Cap-2 Maneuver	-	-	-	-	-	-	128	158	-
Stage 1	-	-	-	-	-	-	440	449	-
Stage 2	-	-	-	-	-	-	447	471	-

Approach	EB	WB	NB
HCM Control Delay, s	0.1	0.2	28.5
HCM LOS			D

Minor Lane/Major Mvmt	NBLn1	EBL	EBT	EBR	WBL	WBT	WBR	SBLn1
Capacity (veh/h)	185	873	-	-	794	-	-	187
HCM Lane V/C Ratio	0.173	0.012	-	-	0.013	-	-	0.171
HCM Control Delay (s)	28.5	9.2	0	-	9.6	0	-	28.2
HCM Lane LOS	D	A	A	-	A	A	-	D
HCM 95th %tile Q(veh)	0.6	0	-	-	0	-	-	0.6

Intersection			
Int Delay, s/veh			

Movement	SBL	SBT	SBR
Vol, veh/h	10	10	10
Conflicting Peds, #/hr	0	0	0
Sign Control	Stop	Stop	Stop
RT Channelized	-	-	None
Storage Length	-	-	-
Veh in Median Storage, #	-	0	-
Grade, %	-	0	-
Peak Hour Factor	94	94	94
Heavy Vehicles, %	2	2	2
Mvmt Flow	11	11	11

Major/Minor	Minor2		
Conflicting Flow All	1282	1276	585
Stage 1	606	606	-
Stage 2	676	670	-
Critical Hdwy	7.12	6.52	6.22
Critical Hdwy Stg 1	6.12	5.52	-
Critical Hdwy Stg 2	6.12	5.52	-
Follow-up Hdwy	3.518	4.018	3.318
Pot Cap-1 Maneuver	142	167	511
Stage 1	484	487	-
Stage 2	443	455	-
Platoon blocked, %			
Mov Cap-1 Maneuver	128	160	511
Mov Cap-2 Maneuver	128	160	-
Stage 1	474	477	-
Stage 2	414	446	-

Approach	SB
HCM Control Delay, s	28.2
HCM LOS	D

Minor Lane/Major Mvmt

Intersection	
Int Delay, s/veh	12.1

Movement	EBL	EBT	EBR	WBL	WBT	WBR	NBL	NBT	NBR
Vol, veh/h	60	520	30	10	490	50	20	60	10
Conflicting Peds, #/hr	0	0	0	0	0	0	0	0	0
Sign Control	Free	Free	Free	Free	Free	Free	Stop	Stop	Stop
RT Channelized	-	-	None	-	-	None	-	-	None
Storage Length	-	-	-	-	-	-	-	-	-
Veh in Median Storage, #	-	0	-	-	0	-	-	0	-
Grade, %	-	0	-	-	0	-	-	0	-
Peak Hour Factor	94	94	94	94	94	94	94	94	94
Heavy Vehicles, %	26	26	26	36	36	36	2	2	2
Mvmt Flow	64	553	32	11	521	53	21	64	11

Major/Minor	Major1			Major2			Minor1		
Conflicting Flow All	574	0	0	585	0	0	1319	1293	569
Stage 1	-	-	-	-	-	-	697	697	-
Stage 2	-	-	-	-	-	-	622	596	-
Critical Hdwy	4.36	-	-	4.46	-	-	7.12	6.52	6.22
Critical Hdwy Stg 1	-	-	-	-	-	-	6.12	5.52	-
Critical Hdwy Stg 2	-	-	-	-	-	-	6.12	5.52	-
Follow-up Hdwy	2.434	-	-	2.524	-	-	3.518	4.018	3.318
Pot Cap-1 Maneuver	890	-	-	842	-	-	134	163	522
Stage 1	-	-	-	-	-	-	431	443	-
Stage 2	-	-	-	-	-	-	474	492	-
Platoon blocked, %		-	-		-	-			
Mov Cap-1 Maneuver	890	-	-	842	-	-	79	143	522
Mov Cap-2 Maneuver	-	-	-	-	-	-	79	143	-
Stage 1	-	-	-	-	-	-	385	396	-
Stage 2	-	-	-	-	-	-	374	483	-

Approach	EB	WB	NB
HCM Control Delay, s	0.9	0.2	86.1
HCM LOS			F

Minor Lane/Major Mvmt	NBLn1	EBL	EBT	EBR	WBL	WBT	WBR	SBLn1
Capacity (veh/h)	130	890	-	-	842	-	-	174
HCM Lane V/C Ratio	0.736	0.072	-	-	0.013	-	-	0.734
HCM Control Delay (s)	86.1	9.4	0	-	9.3	0	-	67.9
HCM Lane LOS	F	A	A	-	A	A	-	F
HCM 95th %tile Q(veh)	4.2	0.2	-	-	0	-	-	4.6

Intersection			
Int Delay, s/veh			

Movement	SBL	SBT	SBR
Vol, veh/h	20	50	50
Conflicting Peds, #/hr	0	0	0
Sign Control	Stop	Stop	Stop
RT Channelized	-	-	None
Storage Length	-	-	-
Veh in Median Storage, #	-	0	-
Grade, %	-	0	-
Peak Hour Factor	94	94	94
Heavy Vehicles, %	2	2	2
Mvmt Flow	21	53	53

Major/Minor	Minor2		
Conflicting Flow All	1303	1282	548
Stage 1	569	569	-
Stage 2	734	713	-
Critical Hdwy	7.12	6.52	6.22
Critical Hdwy Stg 1	6.12	5.52	-
Critical Hdwy Stg 2	6.12	5.52	-
Follow-up Hdwy	3.518	4.018	3.318
Pot Cap-1 Maneuver	138	165	536
Stage 1	507	506	-
Stage 2	412	435	-
Platoon blocked, %			
Mov Cap-1 Maneuver	80	145	536
Mov Cap-2 Maneuver	80	145	-
Stage 1	453	496	-
Stage 2	302	388	-

Approach	SB
HCM Control Delay, s	67.9
HCM LOS	F

Minor Lane/Major Mvmt

Intersection	
Int Delay, s/veh	1.8

Movement	EBL	EBT	EBR	WBL	WBT	WBR	NBL	NBT	NBR
Vol, veh/h	10	540	10	10	530	40	10	10	10
Conflicting Peds, #/hr	0	0	0	0	0	0	0	0	0
Sign Control	Free	Free	Free	Free	Free	Free	Stop	Stop	Stop
RT Channelized	-	-	None	-	-	None	-	-	None
Storage Length	-	-	-	-	-	-	-	-	-
Veh in Median Storage, #	-	0	-	-	0	-	-	0	-
Grade, %	-	0	-	-	0	-	-	0	-
Peak Hour Factor	94	94	94	94	94	94	94	94	94
Heavy Vehicles, %	26	26	26	36	36	36	2	2	2
Mvmt Flow	11	574	11	11	564	43	11	11	11

Major/Minor	Major1			Major2			Minor1		
Conflicting Flow All	606	0	0	585	0	0	1218	1229	580
Stage 1	-	-	-	-	-	-	601	601	-
Stage 2	-	-	-	-	-	-	617	628	-
Critical Hdwy	4.36	-	-	4.46	-	-	7.12	6.52	6.22
Critical Hdwy Stg 1	-	-	-	-	-	-	6.12	5.52	-
Critical Hdwy Stg 2	-	-	-	-	-	-	6.12	5.52	-
Follow-up Hdwy	2.434	-	-	2.524	-	-	3.518	4.018	3.318
Pot Cap-1 Maneuver	865	-	-	842	-	-	157	178	514
Stage 1	-	-	-	-	-	-	487	489	-
Stage 2	-	-	-	-	-	-	477	476	-
Platoon blocked, %		-	-		-	-			
Mov Cap-1 Maneuver	865	-	-	842	-	-	142	171	514
Mov Cap-2 Maneuver	-	-	-	-	-	-	142	171	-
Stage 1	-	-	-	-	-	-	478	480	-
Stage 2	-	-	-	-	-	-	448	466	-

Approach	EB	WB	NB
HCM Control Delay, s	0.2	0.2	26.1
HCM LOS			D

Minor Lane/Major Mvmt	NBLn1	EBL	EBT	EBR	WBL	WBT	WBR	SBLn1
Capacity (veh/h)	202	865	-	-	842	-	-	184
HCM Lane V/C Ratio	0.158	0.012	-	-	0.013	-	-	0.231
HCM Control Delay (s)	26.1	9.2	0	-	9.3	0	-	30.4
HCM Lane LOS	D	A	A	-	A	A	-	D
HCM 95th %tile Q(veh)	0.5	0	-	-	0	-	-	0.9

Intersection	
Int Delay, s/veh	

Movement	SBL	SBT	SBR
Vol, veh/h	20	10	10
Conflicting Peds, #/hr	0	0	0
Sign Control	Stop	Stop	Stop
RT Channelized	-	-	None
Storage Length	-	-	-
Veh in Median Storage, #	-	0	-
Grade, %	-	0	-
Peak Hour Factor	94	94	94
Heavy Vehicles, %	2	2	2
Mvmt Flow	21	11	11

Major/Minor	Minor2		
Conflicting Flow All	1218	1212	585
Stage 1	606	606	-
Stage 2	612	606	-
Critical Hdwy	7.12	6.52	6.22
Critical Hdwy Stg 1	6.12	5.52	-
Critical Hdwy Stg 2	6.12	5.52	-
Follow-up Hdwy	3.518	4.018	3.318
Pot Cap-1 Maneuver	157	182	511
Stage 1	484	487	-
Stage 2	480	487	-
Platoon blocked, %			
Mov Cap-1 Maneuver	142	175	511
Mov Cap-2 Maneuver	142	175	-
Stage 1	475	477	-
Stage 2	451	478	-

Approach	SB
HCM Control Delay, s	30.4
HCM LOS	D

Minor Lane/Major Mvmt

Intersection	
Int Delay, s/veh	4.4

Movement	EBL	EBT	EBR	WBL	WBT	WBR	NBL	NBT	NBR
Vol, veh/h	0	260	330	20	410	0	0	0	0
Conflicting Peds, #/hr	0	0	0	0	0	0	0	0	0
Sign Control	Free	Free	Free	Free	Free	Free	Stop	Stop	Stop
RT Channelized	-	-	Free	-	-	None	-	-	None
Storage Length	-	-	-	135	-	-	-	-	-
Veh in Median Storage, #	-	0	-	-	0	-	-	0	-
Grade, %	-	0	-	-	0	-	-	0	-
Peak Hour Factor	86	86	86	86	86	86	86	86	86
Heavy Vehicles, %	38	38	38	44	44	44	2	2	2
Mvmt Flow	0	302	384	23	477	0	0	0	0

Major/Minor	Major1			Major2		
Conflicting Flow All	477	0	-	302	0	0
Stage 1	-	-	-	-	-	-
Stage 2	-	-	-	-	-	-
Critical Hdwy	4.48	-	-	4.54	-	-
Critical Hdwy Stg 1	-	-	-	-	-	-
Critical Hdwy Stg 2	-	-	-	-	-	-
Follow-up Hdwy	2.542	-	-	2.596	-	-
Pot Cap-1 Maneuver	921	-	0	1054	-	-
Stage 1	-	-	0	-	-	-
Stage 2	-	-	0	-	-	-
Platoon blocked, %		-			-	-
Mov Cap-1 Maneuver	921	-	-	1054	-	-
Mov Cap-2 Maneuver	-	-	-	-	-	-
Stage 1	-	-	-	-	-	-
Stage 2	-	-	-	-	-	-

Approach	EB	WB
HCM Control Delay, s	0	0.4
HCM LOS		

Minor Lane/Major Mvmt	EBL	EBT	WBL	WBT	WBR	SBLn1	SBLn2
Capacity (veh/h)	921	-	1054	-	-	291	511
HCM Lane V/C Ratio	-	-	0.022	-	-	0.12	0.432
HCM Control Delay (s)	0	-	8.5	-	-	19	17.3
HCM Lane LOS	A	-	A	-	-	C	C
HCM 95th %tile Q(veh)	0	-	0.1	-	-	0.4	2.2

Intersection			
Int Delay, s/veh			

Movement	SBL	SBT	SBR
Vol, veh/h	30	0	190
Conflicting Peds, #/hr	0	0	0
Sign Control	Stop	Stop	Stop
RT Channelized	-	-	None
Storage Length	-	-	0
Veh in Median Storage, #	-	0	-
Grade, %	-	0	-
Peak Hour Factor	86	86	86
Heavy Vehicles, %	38	2	44
Mvmt Flow	35	0	221

Major/Minor	Minor2		
Conflicting Flow All	825	825	477
Stage 1	523	523	-
Stage 2	302	302	-
Critical Hdwy	6.78	6.52	6.64
Critical Hdwy Stg 1	5.78	5.52	-
Critical Hdwy Stg 2	5.78	5.52	-
Follow-up Hdwy	3.842	4.018	3.696
Pot Cap-1 Maneuver	298	308	511
Stage 1	528	530	-
Stage 2	675	664	-
Platoon blocked, %			
Mov Cap-1 Maneuver	291	0	511
Mov Cap-2 Maneuver	291	0	-
Stage 1	516	0	-
Stage 2	675	0	-

Approach	SB
HCM Control Delay, s	17.5
HCM LOS	C

Minor Lane/Major Mvmt

Intersection	
Int Delay, s/veh	10.8

Movement	EBL	EBT	EBR	WBL	WBT	WBR	NBL	NBT	NBR
Vol, veh/h	0	90	210	0	50	30	380	0	20
Conflicting Peds, #/hr	0	0	0	0	0	0	0	0	0
Sign Control	Free	Free	Free	Free	Free	Free	Stop	Stop	Stop
RT Channelized	-	-	None	-	-	None	-	-	None
Storage Length	-	-	-	-	-	-	0	-	0
Veh in Median Storage, #	-	0	-	-	0	-	-	0	-
Grade, %	-	0	-	-	0	-	-	0	-
Peak Hour Factor	91	91	91	91	91	91	91	91	91
Heavy Vehicles, %	38	38	38	44	44	44	44	2	2
Mvmt Flow	0	99	231	0	55	33	418	0	22

Major/Minor	Major1			Major2			Minor1		
Conflicting Flow All	88	0	0	330	0	0	285	302	214
Stage 1	-	-	-	-	-	-	214	214	-
Stage 2	-	-	-	-	-	-	71	88	-
Critical Hdwy	4.48	-	-	4.54	-	-	6.84	6.52	6.22
Critical Hdwy Stg 1	-	-	-	-	-	-	5.84	5.52	-
Critical Hdwy Stg 2	-	-	-	-	-	-	5.84	5.52	-
Follow-up Hdwy	2.542	-	-	2.596	-	-	3.896	4.018	3.318
Pot Cap-1 Maneuver	1309	-	-	1028	-	-	625	611	826
Stage 1	-	-	-	-	-	-	732	725	-
Stage 2	-	-	-	-	-	-	856	822	-
Platoon blocked, %		-	-		-	-			
Mov Cap-1 Maneuver	1309	-	-	1028	-	-	625	0	826
Mov Cap-2 Maneuver	-	-	-	-	-	-	625	0	-
Stage 1	-	-	-	-	-	-	732	0	-
Stage 2	-	-	-	-	-	-	856	0	-

Approach	EB	WB	NB
HCM Control Delay, s	0	0	21
HCM LOS			C

Minor Lane/Major Mvmt	NBLn1	NBLn2	EBL	EBT	EBR	WBL	WBT	WBR
Capacity (veh/h)	625	826	1309	-	-	1028	-	-
HCM Lane V/C Ratio	0.668	0.027	-	-	-	-	-	-
HCM Control Delay (s)	21.6	9.5	0	-	-	0	-	-
HCM Lane LOS	C	A	A	-	-	A	-	-
HCM 95th %tile Q(veh)	5.1	0.1	0	-	-	0	-	-

Intersection			
Int Delay, s/veh			

Movement	SBL	SBT	SBR
Vol, veh/h	0	0	0
Conflicting Peds, #/hr	0	0	0
Sign Control	Stop	Stop	Stop
RT Channelized	-	-	None
Storage Length	-	-	-
Veh in Median Storage, #	-	0	-
Grade, %	-	0	-
Peak Hour Factor	91	91	91
Heavy Vehicles, %	2	2	2
Mvmt Flow	0	0	0

Major/Minor	
Conflicting Flow All	
Stage 1	
Stage 2	
Critical Hdwy	
Critical Hdwy Stg 1	
Critical Hdwy Stg 2	
Follow-up Hdwy	
Pot Cap-1 Maneuver	
Stage 1	
Stage 2	
Platoon blocked, %	
Mov Cap-1 Maneuver	
Mov Cap-2 Maneuver	
Stage 1	
Stage 2	

Approach	
HCM Control Delay, s	
HCM LOS	

Minor Lane/Major Mvmt

Movement	EBL	EBT	WBT	WBR	SBL	SBR
Lane Configurations						
Traffic Volume (veh/h)	0	1730	1970	150	0	0
Future Volume (Veh/h)	0	1730	1970	150	0	0
Sign Control		Free	Free		Stop	
Grade		0%	0%		0%	
Peak Hour Factor	1.00	1.00	1.00	1.00	1.00	1.00
Hourly flow rate (vph)	0	1730	1970	150	0	0
Pedestrians						
Lane Width (ft)						
Walking Speed (ft/s)						
Percent Blockage						
Right turn flare (veh)						
Median type		None	None			
Median storage veh)						
Upstream signal (ft)						
pX, platoon unblocked						
vC, conflicting volume	1970				2835	985
vC1, stage 1 conf vol						
vC2, stage 2 conf vol						
vCu, unblocked vol	1970				2835	985
tC, single (s)	4.7				6.8	6.9
tC, 2 stage (s)						
tF (s)	2.5				3.5	3.3
p0 queue free %	100				100	100
cM capacity (veh/h)	202				14	247

Direction, Lane #	EB 1	EB 2	WB 1	WB 2	WB 3
Volume Total	865	865	985	985	150
Volume Left	0	0	0	0	0
Volume Right	0	0	0	0	150
cSH	1700	1700	1700	1700	1700
Volume to Capacity	0.51	0.51	0.58	0.58	0.09
Queue Length 95th (ft)	0	0	0	0	0
Control Delay (s)	0.0	0.0	0.0	0.0	0.0
Lane LOS					
Approach Delay (s)	0.0		0.0		
Approach LOS					

Intersection Summary			
Average Delay	0.0		
Intersection Capacity Utilization	52.6%	ICU Level of Service	A
Analysis Period (min)	15		

Movement	EBL	EBT	WBT	WBR	SBL	SBR
Lane Configurations						
Traffic Volume (veh/h)	0	1820	2050	10	0	0
Future Volume (Veh/h)	0	1820	2050	10	0	0
Sign Control		Free	Free		Stop	
Grade		0%	0%		0%	
Peak Hour Factor	1.00	1.00	1.00	1.00	1.00	1.00
Hourly flow rate (vph)	0	1820	2050	10	0	0
Pedestrians						
Lane Width (ft)						
Walking Speed (ft/s)						
Percent Blockage						
Right turn flare (veh)						
Median type		None	None			
Median storage veh)						
Upstream signal (ft)						
pX, platoon unblocked						
vC, conflicting volume	2060				2960	1025
vC1, stage 1 conf vol						
vC2, stage 2 conf vol						
vCu, unblocked vol	2060				2960	1025
tC, single (s)	4.7				6.8	6.9
tC, 2 stage (s)						
tF (s)	2.5				3.5	3.3
p0 queue free %	100				100	100
cM capacity (veh/h)	184				11	232

Direction, Lane #	EB 1	EB 2	WB 1	WB 2	WB 3
Volume Total	910	910	1025	1025	10
Volume Left	0	0	0	0	0
Volume Right	0	0	0	0	10
cSH	1700	1700	1700	1700	1700
Volume to Capacity	0.54	0.54	0.60	0.60	0.01
Queue Length 95th (ft)	0	0	0	0	0
Control Delay (s)	0.0	0.0	0.0	0.0	0.0
Lane LOS					
Approach Delay (s)	0.0		0.0		
Approach LOS					

Intersection Summary			
Average Delay	0.0		
Intersection Capacity Utilization	54.6%	ICU Level of Service	A
Analysis Period (min)	15		

Movement	EBL	EBT	EBR	WBL	WBT	WBR	NBL	NBT	NBR	SBL	SBT	SBR
Lane Configurations												
Traffic Volume (veh/h)	0	1650	170	0	2050	10	0	0	20	0	0	10
Future Volume (Veh/h)	0	1650	170	0	2050	10	0	0	20	0	0	10
Sign Control		Free			Free			Stop			Stop	
Grade		0%			0%			0%			0%	
Peak Hour Factor	1.00	1.00	1.00	1.00	1.00	1.00	1.00	1.00	1.00	1.00	1.00	1.00
Hourly flow rate (vph)	0	1650	170	0	2050	10	0	0	20	0	0	10
Pedestrians												
Lane Width (ft)												
Walking Speed (ft/s)												
Percent Blockage												
Right turn flare (veh)												
Median type		None			None							
Median storage veh)												
Upstream signal (ft)												
pX, platoon unblocked												
vC, conflicting volume	2060			1820			2770	3795	910	2900	3875	1030
vC1, stage 1 conf vol												
vC2, stage 2 conf vol												
vCu, unblocked vol	2060			1820			2770	3795	910	2900	3875	1030
tC, single (s)	4.1			4.1			7.5	6.5	6.9	7.5	6.5	6.9
tC, 2 stage (s)												
tF (s)	2.2			2.2			3.5	4.0	3.3	3.5	4.0	3.3
p0 queue free %	100			100			100	100	93	100	100	96
cM capacity (veh/h)	268			333			9	4	277	7	3	231

Direction, Lane #	EB 1	EB 2	WB 1	WB 2	NB 1	SB 1
Volume Total	1100	720	1367	693	20	10
Volume Left	0	0	0	0	0	0
Volume Right	0	170	0	10	20	10
cSH	1700	1700	1700	1700	277	231
Volume to Capacity	0.65	0.42	0.80	0.41	0.07	0.04
Queue Length 95th (ft)	0	0	0	0	6	3
Control Delay (s)	0.0	0.0	0.0	0.0	19.0	21.3
Lane LOS					C	C
Approach Delay (s)	0.0		0.0		19.0	21.3
Approach LOS					C	C

Intersection Summary			
Average Delay	0.2		
Intersection Capacity Utilization	61.6%	ICU Level of Service	B
Analysis Period (min)	15		

Intersection	
Int Delay, s/veh	0.2

Movement	EBL	EBT	EBR	WBL	WBT	WBR	NBL	NBT	NBR	SBL	SBT	SBR
Traffic Vol, veh/h	0	1650	170	0	2050	10	0	0	20	0	0	10
Future Vol, veh/h	0	1650	170	0	2050	10	0	0	20	0	0	10
Conflicting Peds, #/hr	0	0	0	0	0	0	0	0	0	0	0	0
Sign Control	Free	Free	Free	Free	Free	Free	Stop	Stop	Stop	Stop	Stop	Stop
RT Channelized	-	-	None	-	-	None	-	-	None	-	-	None
Storage Length	-	-	-	-	-	-	-	-	0	-	-	0
Veh in Median Storage, #	-	0	-	-	0	-	-	0	-	-	0	-
Grade, %	-	0	-	-	0	-	-	0	-	-	0	-
Peak Hour Factor	100	100	100	100	100	100	100	100	100	100	100	100
Heavy Vehicles, %	2	2	2	2	2	2	2	2	2	2	2	2
Mvmt Flow	0	1650	170	0	2050	10	0	0	20	0	0	10

Major/Minor	Major1			Major2			Minor1			Minor2		
Conflicting Flow All	2060	0	0	1820	0	0	2760	3795	910	2880	3875	1030
Stage 1	-	-	-	-	-	-	1735	1735	-	2055	2055	-
Stage 2	-	-	-	-	-	-	1025	2060	-	825	1820	-
Critical Hdwy	4.14	-	-	4.14	-	-	7.54	6.54	6.94	7.54	6.54	6.94
Critical Hdwy Stg 1	-	-	-	-	-	-	6.54	5.54	-	6.54	5.54	-
Critical Hdwy Stg 2	-	-	-	-	-	-	6.54	5.54	-	6.54	5.54	-
Follow-up Hdwy	2.22	-	-	2.22	-	-	3.52	4.02	3.32	3.52	4.02	3.32
Pot Cap-1 Maneuver	268	-	-	333	-	-	9	4	277	7	3	231
Stage 1	-	-	-	-	-	-	91	140	-	57	97	-
Stage 2	-	-	-	-	-	-	252	96	-	333	127	-
Platoon blocked, %		-	-		-	-						
Mov Cap-1 Maneuver	268	-	-	333	-	-	9	4	277	6	3	231
Mov Cap-2 Maneuver	-	-	-	-	-	-	9	4	-	6	3	-
Stage 1	-	-	-	-	-	-	91	140	-	57	97	-
Stage 2	-	-	-	-	-	-	241	96	-	309	127	-

Approach	EB	WB	NB	SB
HCM Control Delay, s	0	0	19	21.3
HCM LOS			C	C

Minor Lane/Major Mvmt	NBLn1	EBL	EBT	EBR	WBL	WBT	WBR	SBLn1
Capacity (veh/h)	277	268	-	-	333	-	-	231
HCM Lane V/C Ratio	0.072	-	-	-	-	-	-	0.043
HCM Control Delay (s)	19	0	-	-	0	-	-	21.3
HCM Lane LOS	C	A	-	-	A	-	-	C
HCM 95th %tile Q(veh)	0.2	0	-	-	0	-	-	0.1

Movement	EBL	EBT	EBR	WBL	WBT	WBR	NBL	NBT	NBR	SBL	SBT	SBR
Lane Configurations												
Traffic Volume (veh/h)	0	1670	10	0	2060	10	0	0	10	0	0	10
Future Volume (Veh/h)	0	1670	10	0	2060	10	0	0	10	0	0	10
Sign Control		Free			Free			Stop			Stop	
Grade		0%			0%			0%			0%	
Peak Hour Factor	1.00	1.00	1.00	1.00	1.00	1.00	1.00	1.00	1.00	1.00	1.00	1.00
Hourly flow rate (vph)	0	1670	10	0	2060	10	0	0	10	0	0	10
Pedestrians												
Lane Width (ft)												
Walking Speed (ft/s)												
Percent Blockage												
Right turn flare (veh)												
Median type		None			None							
Median storage veh)												
Upstream signal (ft)												
pX, platoon unblocked												
vC, conflicting volume	2070			1680			2715	3745	840	2910	3745	1035
vC1, stage 1 conf vol												
vC2, stage 2 conf vol												
vCu, unblocked vol	2070			1680			2715	3745	840	2910	3745	1035
tC, single (s)	4.1			4.1			7.5	6.5	6.9	7.5	6.5	6.9
tC, 2 stage (s)												
tF (s)	2.2			2.2			3.5	4.0	3.3	3.5	4.0	3.3
p0 queue free %	100			100			100	100	97	100	100	96
cM capacity (veh/h)	266			377			9	4	309	7	4	229

Direction, Lane #	EB 1	EB 2	WB 1	WB 2	NB 1	SB 1
Volume Total	1113	567	1373	697	10	10
Volume Left	0	0	0	0	0	0
Volume Right	0	10	0	10	10	10
cSH	1700	1700	1700	1700	309	229
Volume to Capacity	0.65	0.33	0.81	0.41	0.03	0.04
Queue Length 95th (ft)	0	0	0	0	3	3
Control Delay (s)	0.0	0.0	0.0	0.0	17.1	21.4
Lane LOS					C	C
Approach Delay (s)	0.0		0.0		17.1	21.4
Approach LOS					C	C

Intersection Summary			
Average Delay	0.1		
Intersection Capacity Utilization	61.8%	ICU Level of Service	B
Analysis Period (min)	15		

Intersection	
Int Delay, s/veh	0.1

Movement	EBL	EBT	EBR	WBL	WBT	WBR	NBL	NBT	NBR	SBL	SBT	SBR
Traffic Vol, veh/h	0	1670	10	0	2060	10	0	0	10	0	0	10
Future Vol, veh/h	0	1670	10	0	2060	10	0	0	10	0	0	10
Conflicting Peds, #/hr	0	0	0	0	0	0	0	0	0	0	0	0
Sign Control	Free	Free	Free	Free	Free	Free	Stop	Stop	Stop	Stop	Stop	Stop
RT Channelized	-	-	None	-	-	None	-	-	None	-	-	None
Storage Length	-	-	-	-	-	-	-	-	0	-	-	0
Veh in Median Storage, #	-	0	-	-	0	-	-	0	-	-	0	-
Grade, %	-	0	-	-	0	-	-	0	-	-	0	-
Peak Hour Factor	100	100	100	100	100	100	100	100	100	100	100	100
Heavy Vehicles, %	2	2	2	2	2	2	2	2	2	2	2	2
Mvmt Flow	0	1670	10	0	2060	10	0	0	10	0	0	10

Major/Minor	Major1			Major2			Minor1			Minor2		
Conflicting Flow All	2070	0	0	1680	0	0	2705	3745	840	2900	3745	1035
Stage 1	-	-	-	-	-	-	1675	1675	-	2065	2065	-
Stage 2	-	-	-	-	-	-	1030	2070	-	835	1680	-
Critical Hdwy	4.14	-	-	4.14	-	-	7.54	6.54	6.94	7.54	6.54	6.94
Critical Hdwy Stg 1	-	-	-	-	-	-	6.54	5.54	-	6.54	5.54	-
Critical Hdwy Stg 2	-	-	-	-	-	-	6.54	5.54	-	6.54	5.54	-
Follow-up Hdwy	2.22	-	-	2.22	-	-	3.52	4.02	3.32	3.52	4.02	3.32
Pot Cap-1 Maneuver	266	-	-	377	-	-	10	4	309	7	4	229
Stage 1	-	-	-	-	-	-	99	150	-	56	96	-
Stage 2	-	-	-	-	-	-	250	95	-	328	150	-
Platoon blocked, %		-	-		-	-						
Mov Cap-1 Maneuver	266	-	-	377	-	-	10	4	309	7	4	229
Mov Cap-2 Maneuver	-	-	-	-	-	-	10	4	-	7	4	-
Stage 1	-	-	-	-	-	-	99	150	-	56	96	-
Stage 2	-	-	-	-	-	-	239	95	-	317	150	-

Approach	EB	WB	NB	SB
HCM Control Delay, s	0	0	17	21.4
HCM LOS			C	C

Minor Lane/Major Mvmt	NBLn1	EBL	EBT	EBR	WBL	WBT	WBR	SBLn1
Capacity (veh/h)	309	266	-	-	377	-	-	229
HCM Lane V/C Ratio	0.032	-	-	-	-	-	-	0.044
HCM Control Delay (s)	17	0	-	-	0	-	-	21.4
HCM Lane LOS	C	A	-	-	A	-	-	C
HCM 95th %tile Q(veh)	0.1	0	-	-	0	-	-	0.1

Movement	EBL	EBT	EBR	WBL	WBT	WBR	NBL	NBT	NBR	SBL	SBT	SBR
Lane Configurations												
Traffic Volume (veh/h)	0	1490	180	0	2020	10	0	0	60	0	0	40
Future Volume (Veh/h)	0	1490	180	0	2020	10	0	0	60	0	0	40
Sign Control		Free			Free			Stop			Stop	
Grade		0%			0%			0%			0%	
Peak Hour Factor	1.00	1.00	1.00	1.00	1.00	1.00	1.00	1.00	1.00	1.00	1.00	1.00
Hourly flow rate (vph)	0	1490	180	0	2020	10	0	0	60	0	0	40
Pedestrians												
Lane Width (ft)												
Walking Speed (ft/s)												
Percent Blockage												
Right turn flare (veh)												
Median type		None			None							
Median storage veh)												
Upstream signal (ft)												
pX, platoon unblocked												
vC, conflicting volume	2030			1670			2630	3610	835	2830	3695	1015
vC1, stage 1 conf vol												
vC2, stage 2 conf vol												
vCu, unblocked vol	2030			1670			2630	3610	835	2830	3695	1015
tC, single (s)	4.8			4.1			7.5	6.5	6.9	7.5	6.5	6.9
tC, 2 stage (s)												
tF (s)	2.5			2.2			3.5	4.0	3.3	3.5	4.0	3.3
p0 queue free %	100			100			100	100	81	100	100	83
cM capacity (veh/h)	182			381			10	5	311	6	5	236

Direction, Lane #	EB 1	EB 2	WB 1	WB 2	NB 1	SB 1
Volume Total	993	677	1347	683	60	40
Volume Left	0	0	0	0	0	0
Volume Right	0	180	0	10	60	40
cSH	1700	1700	1700	1700	311	236
Volume to Capacity	0.58	0.40	0.79	0.40	0.19	0.17
Queue Length 95th (ft)	0	0	0	0	18	15
Control Delay (s)	0.0	0.0	0.0	0.0	19.3	23.3
Lane LOS					C	C
Approach Delay (s)	0.0		0.0		19.3	23.3
Approach LOS					C	C

Intersection Summary			
Average Delay	0.6		
Intersection Capacity Utilization	60.8%	ICU Level of Service	B
Analysis Period (min)	15		

Intersection	
Int Delay, s/veh	0.6

Movement	EBL	EBT	EBR	WBL	WBT	WBR	NBL	NBT	NBR	SBL	SBT	SBR
Traffic Vol, veh/h	0	1490	180	0	2020	10	0	0	60	0	0	40
Future Vol, veh/h	0	1490	180	0	2020	10	0	0	60	0	0	40
Conflicting Peds, #/hr	0	0	0	0	0	0	0	0	0	0	0	0
Sign Control	Free	Free	Free	Free	Free	Free	Stop	Stop	Stop	Stop	Stop	Stop
RT Channelized	-	-	None	-	-	None	-	-	None	-	-	None
Storage Length	-	-	-	-	-	-	-	-	0	-	-	0
Veh in Median Storage, #	-	0	-	-	0	-	-	0	-	-	0	-
Grade, %	-	0	-	-	0	-	-	0	-	-	0	-
Peak Hour Factor	100	100	100	100	100	100	100	100	100	100	100	100
Heavy Vehicles, %	33	33	2	2	41	41	2	2	2	2	2	2
Mvmt Flow	0	1490	180	0	2020	10	0	0	60	0	0	40

Major/Minor	Major1			Major2			Minor1			Minor2		
Conflicting Flow All	2030	0	0	1670	0	0	2590	3610	835	2770	3695	1015
Stage 1	-	-	-	-	-	-	1580	1580	-	2025	2025	-
Stage 2	-	-	-	-	-	-	1010	2030	-	745	1670	-
Critical Hdwy	4.76	-	-	4.14	-	-	7.54	6.54	6.94	7.54	6.54	6.94
Critical Hdwy Stg 1	-	-	-	-	-	-	6.54	5.54	-	6.54	5.54	-
Critical Hdwy Stg 2	-	-	-	-	-	-	6.54	5.54	-	6.54	5.54	-
Follow-up Hdwy	2.53	-	-	2.22	-	-	3.52	4.02	3.32	3.52	4.02	3.32
Pot Cap-1 Maneuver	182	-	-	381	-	-	12	5	311	9	5	236
Stage 1	-	-	-	-	-	-	114	168	-	59	100	-
Stage 2	-	-	-	-	-	-	257	100	-	372	151	-
Platoon blocked, %		-	-		-	-						
Mov Cap-1 Maneuver	182	-	-	381	-	-	10	5	311	7	5	236
Mov Cap-2 Maneuver	-	-	-	-	-	-	10	5	-	7	5	-
Stage 1	-	-	-	-	-	-	114	168	-	59	100	-
Stage 2	-	-	-	-	-	-	213	100	-	300	151	-

Approach	EB	WB	NB	SB
HCM Control Delay, s	0	0	19.3	23.3
HCM LOS			C	C

Minor Lane/Major Mvmt	NBLn1	EBL	EBT	EBR	WBL	WBT	WBR	SBLn1
Capacity (veh/h)	311	182	-	-	381	-	-	236
HCM Lane V/C Ratio	0.193	-	-	-	-	-	-	0.169
HCM Control Delay (s)	19.3	0	-	-	0	-	-	23.3
HCM Lane LOS	C	A	-	-	A	-	-	C
HCM 95th %tile Q(veh)	0.7	0	-	-	0	-	-	0.6

Movement	EBL	EBT	EBR	WBL	WBT	WBR	NBL	NBT	NBR	SBL	SBT	SBR
Lane Configurations												
Traffic Volume (veh/h)	0	1240	150	0	1900	10	0	0	10	0	0	40
Future Volume (Veh/h)	0	1240	150	0	1900	10	0	0	10	0	0	40
Sign Control		Free			Free			Stop			Stop	
Grade		0%			0%			0%			0%	
Peak Hour Factor	1.00	1.00	1.00	1.00	1.00	1.00	1.00	1.00	1.00	1.00	1.00	1.00
Hourly flow rate (vph)	0	1240	150	0	1900	10	0	0	10	0	0	40
Pedestrians												
Lane Width (ft)												
Walking Speed (ft/s)												
Percent Blockage												
Right turn flare (veh)												
Median type		None			None							
Median storage veh)												
Upstream signal (ft)												
pX, platoon unblocked												
vC, conflicting volume	1910			1390			2305	3225	695	2535	3295	955
vC1, stage 1 conf vol												
vC2, stage 2 conf vol												
vCu, unblocked vol	1910			1390			2305	3225	695	2535	3295	955
tC, single (s)	4.7			4.9			7.5	6.5	6.9	7.5	6.5	6.9
tC, 2 stage (s)												
tF (s)	2.5			2.6			3.5	4.0	3.3	3.5	4.0	3.3
p0 queue free %	100			100			100	100	97	100	100	85
cM capacity (veh/h)	212			334			17	9	385	13	8	259

Direction, Lane #	EB 1	EB 2	WB 1	WB 2	NB 1	SB 1
Volume Total	827	563	1267	643	10	40
Volume Left	0	0	0	0	0	0
Volume Right	0	150	0	10	10	40
cSH	1700	1700	1700	1700	385	259
Volume to Capacity	0.49	0.33	0.75	0.38	0.03	0.15
Queue Length 95th (ft)	0	0	0	0	2	13
Control Delay (s)	0.0	0.0	0.0	0.0	14.6	21.4
Lane LOS					B	C
Approach Delay (s)	0.0		0.0		14.6	21.4
Approach LOS					B	C

Intersection Summary			
Average Delay	0.3		
Intersection Capacity Utilization	57.8%	ICU Level of Service	B
Analysis Period (min)	15		

Intersection	
Int Delay, s/veh	0.3

Movement	EBL	EBT	EBR	WBL	WBT	WBR	NBL	NBT	NBR	SBL	SBT	SBR
Traffic Vol, veh/h	0	1240	150	0	1900	10	0	0	10	0	0	40
Future Vol, veh/h	0	1240	150	0	1900	10	0	0	10	0	0	40
Conflicting Peds, #/hr	0	0	0	0	0	0	0	0	0	0	0	0
Sign Control	Free	Free	Free	Free	Free	Free	Stop	Stop	Stop	Stop	Stop	Stop
RT Channelized	-	-	None	-	-	None	-	-	None	-	-	None
Storage Length	-	-	-	-	-	-	-	-	0	-	-	0
Veh in Median Storage, #	-	0	-	-	0	-	-	0	-	-	0	-
Grade, %	-	0	-	-	0	-	-	0	-	-	0	-
Peak Hour Factor	100	100	100	100	100	100	100	100	100	100	100	100
Heavy Vehicles, %	31	31	31	39	39	39	2	2	2	2	2	2
Mvmt Flow	0	1240	150	0	1900	10	0	0	10	0	0	40

Major/Minor	Major1			Major2			Minor1			Minor2		
Conflicting Flow All	1910	0	0	1390	0	0	2265	3225	695	2525	3295	955
Stage 1	-	-	-	-	-	-	1315	1315	-	1905	1905	-
Stage 2	-	-	-	-	-	-	950	1910	-	620	1390	-
Critical Hdwy	4.72	-	-	4.88	-	-	7.54	6.54	6.94	7.54	6.54	6.94
Critical Hdwy Stg 1	-	-	-	-	-	-	6.54	5.54	-	6.54	5.54	-
Critical Hdwy Stg 2	-	-	-	-	-	-	6.54	5.54	-	6.54	5.54	-
Follow-up Hdwy	2.51	-	-	2.59	-	-	3.52	4.02	3.32	3.52	4.02	3.32
Pot Cap-1 Maneuver	212	-	-	334	-	-	22	9	385	14	8	259
Stage 1	-	-	-	-	-	-	167	226	-	71	115	-
Stage 2	-	-	-	-	-	-	280	115	-	442	208	-
Platoon blocked, %		-	-		-	-						
Mov Cap-1 Maneuver	212	-	-	334	-	-	19	9	385	14	8	259
Mov Cap-2 Maneuver	-	-	-	-	-	-	19	9	-	14	8	-
Stage 1	-	-	-	-	-	-	167	226	-	71	115	-
Stage 2	-	-	-	-	-	-	237	115	-	431	208	-

Approach	EB	WB	NB	SB
HCM Control Delay, s	0	0	14.6	21.4
HCM LOS			B	C

Minor Lane/Major Mvmt	NBLn1	EBL	EBT	EBR	WBL	WBT	WBR	SBLn1
Capacity (veh/h)	385	212	-	-	334	-	-	259
HCM Lane V/C Ratio	0.026	-	-	-	-	-	-	0.154
HCM Control Delay (s)	14.6	0	-	-	0	-	-	21.4
HCM Lane LOS	B	A	-	-	A	-	-	C
HCM 95th %tile Q(veh)	0.1	0	-	-	0	-	-	0.5

Movement	EBL	EBT	EBR	WBL	WBT	WBR	NBL	NBT	NBR	SBL	SBT	SBR
Lane Configurations												
Traffic Volume (veh/h)	0	1300	10	0	1840	10	0	0	10	0	0	10
Future Volume (Veh/h)	0	1300	10	0	1840	10	0	0	10	0	0	10
Sign Control		Free			Free			Stop			Stop	
Grade		0%			0%			0%			0%	
Peak Hour Factor	1.00	1.00	1.00	1.00	1.00	1.00	1.00	1.00	1.00	1.00	1.00	1.00
Hourly flow rate (vph)	0	1300	10	0	1840	10	0	0	10	0	0	10
Pedestrians												
Lane Width (ft)												
Walking Speed (ft/s)												
Percent Blockage												
Right turn flare (veh)												
Median type		None			None							
Median storage veh)												
Upstream signal (ft)												
pX, platoon unblocked												
vC, conflicting volume	1850			1310			2235	3155	655	2505	3155	925
vC1, stage 1 conf vol												
vC2, stage 2 conf vol												
vCu, unblocked vol	1850			1310			2235	3155	655	2505	3155	925
tC, single (s)	4.1			4.1			7.5	6.5	6.9	7.5	6.5	6.9
tC, 2 stage (s)												
tF (s)	2.2			2.2			3.5	4.0	3.3	3.5	4.0	3.3
p0 queue free %	100			100			100	100	98	100	100	96
cM capacity (veh/h)	324			524			22	11	409	14	11	271

Direction, Lane #	EB 1	EB 2	WB 1	WB 2	NB 1	SB 1
Volume Total	867	443	1227	623	10	10
Volume Left	0	0	0	0	0	0
Volume Right	0	10	0	10	10	10
cSH	1700	1700	1700	1700	409	271
Volume to Capacity	0.51	0.26	0.72	0.37	0.02	0.04
Queue Length 95th (ft)	0	0	0	0	2	3
Control Delay (s)	0.0	0.0	0.0	0.0	14.0	18.8
Lane LOS					B	C
Approach Delay (s)	0.0		0.0		14.0	18.8
Approach LOS					B	C

Intersection Summary			
Average Delay	0.1		
Intersection Capacity Utilization	56.3%	ICU Level of Service	B
Analysis Period (min)	15		

Intersection	
Int Delay, s/veh	0.1

Movement	EBL	EBT	EBR	WBL	WBT	WBR	NBL	NBT	NBR	SBL	SBT	SBR
Traffic Vol, veh/h	0	1300	10	0	1840	10	0	0	10	0	0	10
Future Vol, veh/h	0	1300	10	0	1840	10	0	0	10	0	0	10
Conflicting Peds, #/hr	0	0	0	0	0	0	0	0	0	0	0	0
Sign Control	Free	Free	Free	Free	Free	Free	Stop	Stop	Stop	Stop	Stop	Stop
RT Channelized	-	-	None	-	-	None	-	-	None	-	-	None
Storage Length	-	-	-	-	-	-	-	-	0	-	-	0
Veh in Median Storage, #	-	0	-	-	0	-	-	0	-	-	0	-
Grade, %	-	0	-	-	0	-	-	0	-	-	0	-
Peak Hour Factor	100	100	100	100	100	100	100	100	100	100	100	100
Heavy Vehicles, %	2	2	2	2	2	2	2	2	2	2	2	2
Mvmt Flow	0	1300	10	0	1840	10	0	0	10	0	0	10

Major/Minor	Major1			Major2			Minor1			Minor2		
Conflicting Flow All	1850	0	0	1310	0	0	2225	3155	655	2495	3155	925
Stage 1	-	-	-	-	-	-	1305	1305	-	1845	1845	-
Stage 2	-	-	-	-	-	-	920	1850	-	650	1310	-
Critical Hdwy	4.14	-	-	4.14	-	-	7.54	6.54	6.94	7.54	6.54	6.94
Critical Hdwy Stg 1	-	-	-	-	-	-	6.54	5.54	-	6.54	5.54	-
Critical Hdwy Stg 2	-	-	-	-	-	-	6.54	5.54	-	6.54	5.54	-
Follow-up Hdwy	2.22	-	-	2.22	-	-	3.52	4.02	3.32	3.52	4.02	3.32
Pot Cap-1 Maneuver	324	-	-	524	-	-	24	11	409	15	11	271
Stage 1	-	-	-	-	-	-	169	228	-	77	124	-
Stage 2	-	-	-	-	-	-	292	123	-	424	227	-
Platoon blocked, %		-	-		-	-						
Mov Cap-1 Maneuver	324	-	-	524	-	-	23	11	409	15	11	271
Mov Cap-2 Maneuver	-	-	-	-	-	-	23	11	-	15	11	-
Stage 1	-	-	-	-	-	-	169	228	-	77	124	-
Stage 2	-	-	-	-	-	-	281	123	-	414	227	-

Approach	EB	WB	NB	SB
HCM Control Delay, s	0	0	14	18.8
HCM LOS			B	C

Minor Lane/Major Mvmt	NBLn1	EBL	EBT	EBR	WBL	WBT	WBR	SBLn1
Capacity (veh/h)	409	324	-	-	524	-	-	271
HCM Lane V/C Ratio	0.024	-	-	-	-	-	-	0.037
HCM Control Delay (s)	14	0	-	-	0	-	-	18.8
HCM Lane LOS	B	A	-	-	A	-	-	C
HCM 95th %tile Q(veh)	0.1	0	-	-	0	-	-	0.1

Movement	EBL	EBT	EBR	WBL	WBT	WBR	NBL	NBT	NBR	SBL	SBT	SBR
Lane Configurations												
Traffic Volume (veh/h)	0	1290	10	0	1820	20	0	0	10	0	0	30
Future Volume (Veh/h)	0	1290	10	0	1820	20	0	0	10	0	0	30
Sign Control		Free			Free			Stop			Stop	
Grade		0%			0%			0%			0%	
Peak Hour Factor	1.00	1.00	1.00	1.00	1.00	1.00	1.00	1.00	1.00	1.00	1.00	1.00
Hourly flow rate (vph)	0	1290	10	0	1820	20	0	0	10	0	0	30
Pedestrians												
Lane Width (ft)												
Walking Speed (ft/s)												
Percent Blockage												
Right turn flare (veh)												
Median type		None			None							
Median storage veh)												
Upstream signal (ft)												
pX, platoon unblocked												
vC, conflicting volume	1840			1300			2235	3135	650	2485	3130	920
vC1, stage 1 conf vol												
vC2, stage 2 conf vol												
vCu, unblocked vol	1840			1300			2235	3135	650	2485	3130	920
tC, single (s)	4.1			4.1			7.5	6.5	6.9	7.5	6.5	6.9
tC, 2 stage (s)												
tF (s)	2.2			2.2			3.5	4.0	3.3	3.5	4.0	3.3
p0 queue free %	100			100			100	100	98	100	100	89
cM capacity (veh/h)	327			529			21	11	412	15	11	273

Direction, Lane #	EB 1	EB 2	WB 1	WB 2	NB 1	SB 1
Volume Total	860	440	1213	627	10	30
Volume Left	0	0	0	0	0	0
Volume Right	0	10	0	20	10	30
cSH	1700	1700	1700	1700	412	273
Volume to Capacity	0.51	0.26	0.71	0.37	0.02	0.11
Queue Length 95th (ft)	0	0	0	0	2	9
Control Delay (s)	0.0	0.0	0.0	0.0	14.0	19.8
Lane LOS					B	C
Approach Delay (s)	0.0		0.0		14.0	19.8
Approach LOS					B	C

Intersection Summary			
Average Delay	0.2		
Intersection Capacity Utilization	56.1%	ICU Level of Service	B
Analysis Period (min)	15		

Intersection	
Int Delay, s/veh	0.2

Movement	EBL	EBT	EBR	WBL	WBT	WBR	NBL	NBT	NBR	SBL	SBT	SBR
Traffic Vol, veh/h	0	1290	10	0	1820	20	0	0	10	0	0	30
Future Vol, veh/h	0	1290	10	0	1820	20	0	0	10	0	0	30
Conflicting Peds, #/hr	0	0	0	0	0	0	0	0	0	0	0	0
Sign Control	Free	Free	Free	Free	Free	Free	Stop	Stop	Stop	Stop	Stop	Stop
RT Channelized	-	-	None	-	-	None	-	-	None	-	-	None
Storage Length	-	-	-	-	-	-	-	-	0	-	-	0
Veh in Median Storage, #	-	0	-	-	0	-	-	0	-	-	0	-
Grade, %	-	0	-	-	0	-	-	0	-	-	0	-
Peak Hour Factor	100	100	100	100	100	100	100	100	100	100	100	100
Heavy Vehicles, %	2	2	2	2	2	2	2	2	2	2	2	2
Mvmt Flow	0	1290	10	0	1820	20	0	0	10	0	0	30

Major/Minor	Major1			Major2			Minor1			Minor2		
Conflicting Flow All	1840	0	0	1300	0	0	2205	3135	650	2475	3130	920
Stage 1	-	-	-	-	-	-	1295	1295	-	1830	1830	-
Stage 2	-	-	-	-	-	-	910	1840	-	645	1300	-
Critical Hdwy	4.14	-	-	4.14	-	-	7.54	6.54	6.94	7.54	6.54	6.94
Critical Hdwy Stg 1	-	-	-	-	-	-	6.54	5.54	-	6.54	5.54	-
Critical Hdwy Stg 2	-	-	-	-	-	-	6.54	5.54	-	6.54	5.54	-
Follow-up Hdwy	2.22	-	-	2.22	-	-	3.52	4.02	3.32	3.52	4.02	3.32
Pot Cap-1 Maneuver	327	-	-	529	-	-	25	11	412	15	11	273
Stage 1	-	-	-	-	-	-	172	231	-	79	126	-
Stage 2	-	-	-	-	-	-	296	124	-	427	230	-
Platoon blocked, %		-	-		-	-						
Mov Cap-1 Maneuver	327	-	-	529	-	-	22	11	412	15	11	273
Mov Cap-2 Maneuver	-	-	-	-	-	-	22	11	-	15	11	-
Stage 1	-	-	-	-	-	-	172	231	-	79	126	-
Stage 2	-	-	-	-	-	-	263	124	-	417	230	-

Approach	EB	WB	NB	SB
HCM Control Delay, s	0	0	14	19.8
HCM LOS			B	C

Minor Lane/Major Mvmt	NBLn1	EBL	EBT	EBR	WBL	WBT	WBR	SBLn1
Capacity (veh/h)	412	327	-	-	529	-	-	273
HCM Lane V/C Ratio	0.024	-	-	-	-	-	-	0.11
HCM Control Delay (s)	14	0	-	-	0	-	-	19.8
HCM Lane LOS	B	A	-	-	A	-	-	C
HCM 95th %tile Q(veh)	0.1	0	-	-	0	-	-	0.4

Movement	EBL	EBT	EBR	WBL	WBT	WBR	NBL	NBT	NBR	SBL	SBT	SBR
Lane Configurations												
Traffic Volume (veh/h)	0	1300	10	0	1840	10	0	0	10	0	0	10
Future Volume (Veh/h)	0	1300	10	0	1840	10	0	0	10	0	0	10
Sign Control		Free			Free			Stop			Stop	
Grade		0%			0%			0%			0%	
Peak Hour Factor	1.00	1.00	1.00	1.00	1.00	1.00	1.00	1.00	1.00	1.00	1.00	1.00
Hourly flow rate (vph)	0	1300	10	0	1840	10	0	0	10	0	0	10
Pedestrians												
Lane Width (ft)												
Walking Speed (ft/s)												
Percent Blockage												
Right turn flare (veh)												
Median type		None			None							
Median storage veh)												
Upstream signal (ft)												
pX, platoon unblocked												
vC, conflicting volume	1850			1310			2235	3155	655	2505	3155	925
vC1, stage 1 conf vol												
vC2, stage 2 conf vol												
vCu, unblocked vol	1850			1310			2235	3155	655	2505	3155	925
tC, single (s)	4.1			4.1			7.5	6.5	6.9	7.5	6.5	6.9
tC, 2 stage (s)												
tF (s)	2.2			2.2			3.5	4.0	3.3	3.5	4.0	3.3
p0 queue free %	100			100			100	100	98	100	100	96
cM capacity (veh/h)	324			524			22	11	409	14	11	271

Direction, Lane #	EB 1	EB 2	WB 1	WB 2	NB 1	SB 1
Volume Total	867	443	1227	623	10	10
Volume Left	0	0	0	0	0	0
Volume Right	0	10	0	10	10	10
cSH	1700	1700	1700	1700	409	271
Volume to Capacity	0.51	0.26	0.72	0.37	0.02	0.04
Queue Length 95th (ft)	0	0	0	0	2	3
Control Delay (s)	0.0	0.0	0.0	0.0	14.0	18.8
Lane LOS					B	C
Approach Delay (s)	0.0		0.0		14.0	18.8
Approach LOS					B	C

Intersection Summary			
Average Delay	0.1		
Intersection Capacity Utilization	56.3%	ICU Level of Service	B
Analysis Period (min)	15		

Intersection	
Int Delay, s/veh	0.1

Movement	EBL	EBT	EBR	WBL	WBT	WBR	NBL	NBT	NBR	SBL	SBT	SBR
Traffic Vol, veh/h	0	1300	10	0	1840	10	0	0	10	0	0	10
Future Vol, veh/h	0	1300	10	0	1840	10	0	0	10	0	0	10
Conflicting Peds, #/hr	0	0	0	0	0	0	0	0	0	0	0	0
Sign Control	Free	Free	Free	Free	Free	Free	Stop	Stop	Stop	Stop	Stop	Stop
RT Channelized	-	-	None	-	-	None	-	-	None	-	-	None
Storage Length	-	-	-	-	-	-	-	-	0	-	-	0
Veh in Median Storage, #	-	0	-	-	0	-	-	0	-	-	0	-
Grade, %	-	0	-	-	0	-	-	0	-	-	0	-
Peak Hour Factor	100	100	100	100	100	100	100	100	100	100	100	100
Heavy Vehicles, %	2	2	2	2	2	2	2	2	2	2	2	2
Mvmt Flow	0	1300	10	0	1840	10	0	0	10	0	0	10

Major/Minor	Major1			Major2			Minor1			Minor2		
Conflicting Flow All	1850	0	0	1310	0	0	2225	3155	655	2495	3155	925
Stage 1	-	-	-	-	-	-	1305	1305	-	1845	1845	-
Stage 2	-	-	-	-	-	-	920	1850	-	650	1310	-
Critical Hdwy	4.14	-	-	4.14	-	-	7.54	6.54	6.94	7.54	6.54	6.94
Critical Hdwy Stg 1	-	-	-	-	-	-	6.54	5.54	-	6.54	5.54	-
Critical Hdwy Stg 2	-	-	-	-	-	-	6.54	5.54	-	6.54	5.54	-
Follow-up Hdwy	2.22	-	-	2.22	-	-	3.52	4.02	3.32	3.52	4.02	3.32
Pot Cap-1 Maneuver	324	-	-	524	-	-	24	11	409	15	11	271
Stage 1	-	-	-	-	-	-	169	228	-	77	124	-
Stage 2	-	-	-	-	-	-	292	123	-	424	227	-
Platoon blocked, %		-	-		-	-						
Mov Cap-1 Maneuver	324	-	-	524	-	-	23	11	409	15	11	271
Mov Cap-2 Maneuver	-	-	-	-	-	-	23	11	-	15	11	-
Stage 1	-	-	-	-	-	-	169	228	-	77	124	-
Stage 2	-	-	-	-	-	-	281	123	-	414	227	-

Approach	EB	WB	NB	SB
HCM Control Delay, s	0	0	14	18.8
HCM LOS			B	C

Minor Lane/Major Mvmt	NBLn1	EBL	EBT	EBR	WBL	WBT	WBR	SBLn1
Capacity (veh/h)	409	324	-	-	524	-	-	271
HCM Lane V/C Ratio	0.024	-	-	-	-	-	-	0.037
HCM Control Delay (s)	14	0	-	-	0	-	-	18.8
HCM Lane LOS	B	A	-	-	A	-	-	C
HCM 95th %tile Q(veh)	0.1	0	-	-	0	-	-	0.1

Movement	EBL	EBT	EBR	WBL	WBT	WBR	NBL	NBT	NBR	SBL	SBT	SBR
Lane Configurations												
Traffic Volume (veh/h)	0	1280	10	0	1820	20	0	0	10	0	0	20
Future Volume (Veh/h)	0	1280	10	0	1820	20	0	0	10	0	0	20
Sign Control		Free			Free			Stop			Stop	
Grade		0%			0%			0%			0%	
Peak Hour Factor	1.00	1.00	1.00	1.00	1.00	1.00	1.00	1.00	1.00	1.00	1.00	1.00
Hourly flow rate (vph)	0	1280	10	0	1820	20	0	0	10	0	0	20
Pedestrians												
Lane Width (ft)												
Walking Speed (ft/s)												
Percent Blockage												
Right turn flare (veh)												
Median type		None			None							
Median storage veh)												
Upstream signal (ft)												
pX, platoon unblocked												
vC, conflicting volume	1840			1290			2215	3125	645	2480	3120	920
vC1, stage 1 conf vol												
vC2, stage 2 conf vol												
vCu, unblocked vol	1840			1290			2215	3125	645	2480	3120	920
tC, single (s)	4.7			4.8			7.5	6.5	6.9	7.5	6.5	6.9
tC, 2 stage (s)												
tF (s)	2.5			2.6			3.5	4.0	3.3	3.5	4.0	3.3
p0 queue free %	100			100			100	100	98	100	100	93
cM capacity (veh/h)	234			382			22	11	415	15	11	273

Direction, Lane #	EB 1	EB 2	WB 1	WB 2	NB 1	SB 1
Volume Total	853	437	1213	627	10	20
Volume Left	0	0	0	0	0	0
Volume Right	0	10	0	20	10	20
cSH	1700	1700	1700	1700	415	273
Volume to Capacity	0.50	0.26	0.71	0.37	0.02	0.07
Queue Length 95th (ft)	0	0	0	0	2	6
Control Delay (s)	0.0	0.0	0.0	0.0	13.9	19.2
Lane LOS					B	C
Approach Delay (s)	0.0		0.0		13.9	19.2
Approach LOS					B	C

Intersection Summary			
Average Delay	0.2		
Intersection Capacity Utilization	56.1%	ICU Level of Service	B
Analysis Period (min)	15		

Intersection	
Int Delay, s/veh	0.2

Movement	EBL	EBT	EBR	WBL	WBT	WBR	NBL	NBT	NBR	SBL	SBT	SBR
Traffic Vol, veh/h	0	1280	10	0	1820	20	0	0	10	0	0	20
Future Vol, veh/h	0	1280	10	0	1820	20	0	0	10	0	0	20
Conflicting Peds, #/hr	0	0	0	0	0	0	0	0	0	0	0	0
Sign Control	Free	Free	Free	Free	Free	Free	Stop	Stop	Stop	Stop	Stop	Stop
RT Channelized	-	-	None	-	-	None	-	-	None	-	-	None
Storage Length	-	-	-	-	-	-	-	-	0	-	-	0
Veh in Median Storage, #	-	0	-	-	0	-	-	0	-	-	0	-
Grade, %	-	0	-	-	0	-	-	0	-	-	0	-
Peak Hour Factor	100	100	100	100	100	100	100	100	100	100	100	100
Heavy Vehicles, %	29	29	29	36	36	36	2	2	2	2	2	2
Mvmt Flow	0	1280	10	0	1820	20	0	0	10	0	0	20

Major/Minor	Major1			Major2			Minor1			Minor2		
Conflicting Flow All	1840	0	0	1290	0	0	2195	3125	645	2470	3120	920
Stage 1	-	-	-	-	-	-	1285	1285	-	1830	1830	-
Stage 2	-	-	-	-	-	-	910	1840	-	640	1290	-
Critical Hdwy	4.68	-	-	4.82	-	-	7.54	6.54	6.94	7.54	6.54	6.94
Critical Hdwy Stg 1	-	-	-	-	-	-	6.54	5.54	-	6.54	5.54	-
Critical Hdwy Stg 2	-	-	-	-	-	-	6.54	5.54	-	6.54	5.54	-
Follow-up Hdwy	2.49	-	-	2.56	-	-	3.52	4.02	3.32	3.52	4.02	3.32
Pot Cap-1 Maneuver	234	-	-	382	-	-	25	11	415	15	11	273
Stage 1	-	-	-	-	-	-	174	233	-	79	126	-
Stage 2	-	-	-	-	-	-	296	124	-	430	232	-
Platoon blocked, %		-	-		-	-						
Mov Cap-1 Maneuver	234	-	-	382	-	-	23	11	415	15	11	273
Mov Cap-2 Maneuver	-	-	-	-	-	-	23	11	-	15	11	-
Stage 1	-	-	-	-	-	-	174	233	-	79	126	-
Stage 2	-	-	-	-	-	-	274	124	-	420	232	-

Approach	EB	WB	NB	SB
HCM Control Delay, s	0	0	13.9	19.2
HCM LOS			B	C

Minor Lane/Major Mvmt	NBLn1	EBL	EBT	EBR	WBL	WBT	WBR	SBLn1
Capacity (veh/h)	415	234	-	-	382	-	-	273
HCM Lane V/C Ratio	0.024	-	-	-	-	-	-	0.073
HCM Control Delay (s)	13.9	0	-	-	0	-	-	19.2
HCM Lane LOS	B	A	-	-	A	-	-	C
HCM 95th %tile Q(veh)	0.1	0	-	-	0	-	-	0.2

Movement	EBL	EBT	EBR	WBL	WBT	WBR	NBL	NBT	NBR	SBL	SBT	SBR
Lane Configurations												
Traffic Volume (veh/h)	0	1190	200	0	1620	20	0	0	10	0	0	90
Future Volume (Veh/h)	0	1190	200	0	1620	20	0	0	10	0	0	90
Sign Control		Free			Free			Stop			Stop	
Grade		0%			0%			0%			0%	
Peak Hour Factor	1.00	1.00	1.00	1.00	1.00	1.00	1.00	1.00	1.00	1.00	1.00	1.00
Hourly flow rate (vph)	0	1190	200	0	1620	20	0	0	10	0	0	90
Pedestrians												
Lane Width (ft)												
Walking Speed (ft/s)												
Percent Blockage												
Right turn flare (veh)												
Median type		None			None							
Median storage veh)												
Upstream signal (ft)												
pX, platoon unblocked												
vC, conflicting volume	1640			1390			2190	2930	695	2235	3020	820
vC1, stage 1 conf vol												
vC2, stage 2 conf vol												
vCu, unblocked vol	1640			1390			2190	2930	695	2235	3020	820
tC, single (s)	4.6			4.8			7.5	6.5	6.9	7.5	6.5	6.9
tC, 2 stage (s)												
tF (s)	2.5			2.6			3.5	4.0	3.3	3.5	4.0	3.3
p0 queue free %	100			100			100	100	97	100	100	72
cM capacity (veh/h)	297			344			18	15	385	23	13	318

Direction, Lane #	EB 1	EB 2	WB 1	WB 2	NB 1	SB 1
Volume Total	793	597	1080	560	10	90
Volume Left	0	0	0	0	0	0
Volume Right	0	200	0	20	10	90
cSH	1700	1700	1700	1700	385	318
Volume to Capacity	0.47	0.35	0.64	0.33	0.03	0.28
Queue Length 95th (ft)	0	0	0	0	2	28
Control Delay (s)	0.0	0.0	0.0	0.0	14.6	20.7
Lane LOS					B	C
Approach Delay (s)	0.0		0.0		14.6	20.7
Approach LOS					B	C

Intersection Summary			
Average Delay	0.6		
Intersection Capacity Utilization	52.8%	ICU Level of Service	A
Analysis Period (min)	15		

Intersection	
Int Delay, s/veh	0.6

Movement	EBL	EBT	EBR	WBL	WBT	WBR	NBL	NBT	NBR	SBL	SBT	SBR
Traffic Vol, veh/h	0	1190	200	0	1620	20	0	0	10	0	0	90
Future Vol, veh/h	0	1190	200	0	1620	20	0	0	10	0	0	90
Conflicting Peds, #/hr	0	0	0	0	0	0	0	0	0	0	0	0
Sign Control	Free	Free	Free	Free	Free	Free	Stop	Stop	Stop	Stop	Stop	Stop
RT Channelized	-	-	None	-	-	None	-	-	None	-	-	None
Storage Length	-	-	-	-	-	-	-	-	0	-	-	0
Veh in Median Storage, #	-	0	-	-	0	-	-	0	-	-	0	-
Grade, %	-	0	-	-	0	-	-	0	-	-	0	-
Peak Hour Factor	100	100	100	100	100	100	100	100	100	100	100	100
Heavy Vehicles, %	26	26	26	36	36	36	2	2	2	2	2	2
Mvmt Flow	0	1190	200	0	1620	20	0	0	10	0	0	90

Major/Minor	Major1			Major2			Minor1			Minor2		
Conflicting Flow All	1640	0	0	1390	0	0	2100	2930	695	2225	3020	820
Stage 1	-	-	-	-	-	-	1290	1290	-	1630	1630	-
Stage 2	-	-	-	-	-	-	810	1640	-	595	1390	-
Critical Hdwy	4.62	-	-	4.82	-	-	7.54	6.54	6.94	7.54	6.54	6.94
Critical Hdwy Stg 1	-	-	-	-	-	-	6.54	5.54	-	6.54	5.54	-
Critical Hdwy Stg 2	-	-	-	-	-	-	6.54	5.54	-	6.54	5.54	-
Follow-up Hdwy	2.46	-	-	2.56	-	-	3.52	4.02	3.32	3.52	4.02	3.32
Pot Cap-1 Maneuver	297	-	-	344	-	-	30	15	385	24	13	318
Stage 1	-	-	-	-	-	-	173	232	-	106	158	-
Stage 2	-	-	-	-	-	-	340	157	-	458	208	-
Platoon blocked, %		-	-		-	-						
Mov Cap-1 Maneuver	297	-	-	344	-	-	22	15	385	23	13	318
Mov Cap-2 Maneuver	-	-	-	-	-	-	22	15	-	23	13	-
Stage 1	-	-	-	-	-	-	173	232	-	106	158	-
Stage 2	-	-	-	-	-	-	244	157	-	446	208	-

Approach	EB	WB	NB	SB
HCM Control Delay, s	0	0	14.6	20.7
HCM LOS			B	C

Minor Lane/Major Mvmt	NBLn1	EBL	EBT	EBR	WBL	WBT	WBR	SBLn1
Capacity (veh/h)	385	297	-	-	344	-	-	318
HCM Lane V/C Ratio	0.026	-	-	-	-	-	-	0.283
HCM Control Delay (s)	14.6	0	-	-	0	-	-	20.7
HCM Lane LOS	B	A	-	-	A	-	-	C
HCM 95th %tile Q(veh)	0.1	0	-	-	0	-	-	1.1

Movement	EBL	EBT	EBR	WBL	WBT	WBR	NBL	NBT	NBR	SBL	SBT	SBR
Lane Configurations												
Traffic Volume (veh/h)	0	1190	10	0	1630	10	0	0	10	0	0	10
Future Volume (Veh/h)	0	1190	10	0	1630	10	0	0	10	0	0	10
Sign Control		Free			Free			Stop			Stop	
Grade		0%			0%			0%			0%	
Peak Hour Factor	1.00	1.00	1.00	1.00	1.00	1.00	1.00	1.00	1.00	1.00	1.00	1.00
Hourly flow rate (vph)	0	1190	10	0	1630	10	0	0	10	0	0	10
Pedestrians												
Lane Width (ft)												
Walking Speed (ft/s)												
Percent Blockage												
Right turn flare (veh)												
Median type		None			None							
Median storage veh)												
Upstream signal (ft)												
pX, platoon unblocked												
vC, conflicting volume	1640			1200			2020	2835	600	2240	2835	820
vC1, stage 1 conf vol												
vC2, stage 2 conf vol												
vCu, unblocked vol	1640			1200			2020	2835	600	2240	2835	820
tC, single (s)	4.6			4.8			7.5	6.5	6.9	7.5	6.5	6.9
tC, 2 stage (s)												
tF (s)	2.5			2.6			3.5	4.0	3.3	3.5	4.0	3.3
p0 queue free %	100			100			100	100	98	100	100	97
cM capacity (veh/h)	297			419			33	17	444	23	17	318

Direction, Lane #	EB 1	EB 2	WB 1	WB 2	NB 1	SB 1
Volume Total	793	407	1087	553	10	10
Volume Left	0	0	0	0	0	0
Volume Right	0	10	0	10	10	10
cSH	1700	1700	1700	1700	444	318
Volume to Capacity	0.47	0.24	0.64	0.33	0.02	0.03
Queue Length 95th (ft)	0	0	0	0	2	2
Control Delay (s)	0.0	0.0	0.0	0.0	13.3	16.7
Lane LOS					B	C
Approach Delay (s)	0.0		0.0		13.3	16.7
Approach LOS					B	C

Intersection Summary			
Average Delay	0.1		
Intersection Capacity Utilization	51.1%	ICU Level of Service	A
Analysis Period (min)	15		

Intersection	
Int Delay, s/veh	0.1

Movement	EBL	EBT	EBR	WBL	WBT	WBR	NBL	NBT	NBR	SBL	SBT	SBR
Traffic Vol, veh/h	0	1190	10	0	1630	10	0	0	10	0	0	10
Future Vol, veh/h	0	1190	10	0	1630	10	0	0	10	0	0	10
Conflicting Peds, #/hr	0	0	0	0	0	0	0	0	0	0	0	0
Sign Control	Free	Free	Free	Free	Free	Free	Stop	Stop	Stop	Stop	Stop	Stop
RT Channelized	-	-	None	-	-	None	-	-	None	-	-	None
Storage Length	-	-	-	-	-	-	-	-	0	-	-	0
Veh in Median Storage, #	-	0	-	-	0	-	-	0	-	-	0	-
Grade, %	-	0	-	-	0	-	-	0	-	-	0	-
Peak Hour Factor	100	100	100	100	100	100	100	100	100	100	100	100
Heavy Vehicles, %	26	26	26	36	36	36	2	2	2	2	2	2
Mvmt Flow	0	1190	10	0	1630	10	0	0	10	0	0	10

Major/Minor	Major1			Major2			Minor1			Minor2		
Conflicting Flow All	1640	0	0	1200	0	0	2010	2835	600	2230	2835	820
Stage 1	-	-	-	-	-	-	1195	1195	-	1635	1635	-
Stage 2	-	-	-	-	-	-	815	1640	-	595	1200	-
Critical Hdwy	4.62	-	-	4.82	-	-	7.54	6.54	6.94	7.54	6.54	6.94
Critical Hdwy Stg 1	-	-	-	-	-	-	6.54	5.54	-	6.54	5.54	-
Critical Hdwy Stg 2	-	-	-	-	-	-	6.54	5.54	-	6.54	5.54	-
Follow-up Hdwy	2.46	-	-	2.56	-	-	3.52	4.02	3.32	3.52	4.02	3.32
Pot Cap-1 Maneuver	297	-	-	419	-	-	35	17	444	24	17	318
Stage 1	-	-	-	-	-	-	198	258	-	105	157	-
Stage 2	-	-	-	-	-	-	338	157	-	458	256	-
Platoon blocked, %		-	-		-	-						
Mov Cap-1 Maneuver	297	-	-	419	-	-	34	17	444	23	17	318
Mov Cap-2 Maneuver	-	-	-	-	-	-	34	17	-	23	17	-
Stage 1	-	-	-	-	-	-	198	258	-	105	157	-
Stage 2	-	-	-	-	-	-	327	157	-	448	256	-

Approach	EB	WB	NB	SB
HCM Control Delay, s	0	0	13.3	16.7
HCM LOS			B	C

Minor Lane/Major Mvmt	NBLn1	EBL	EBT	EBR	WBL	WBT	WBR	SBLn1
Capacity (veh/h)	444	297	-	-	419	-	-	318
HCM Lane V/C Ratio	0.023	-	-	-	-	-	-	0.031
HCM Control Delay (s)	13.3	0	-	-	0	-	-	16.7
HCM Lane LOS	B	A	-	-	A	-	-	C
HCM 95th %tile Q(veh)	0.1	0	-	-	0	-	-	0.1

Movement	EBL	EBT	EBR	WBL	WBT	WBR	NBL	NBT	NBR	SBL	SBT	SBR
Lane Configurations												
Traffic Volume (veh/h)	0	1230	10	0	1440	20	0	0	10	0	0	10
Future Volume (Veh/h)	0	1230	10	0	1440	20	0	0	10	0	0	10
Sign Control		Free			Free			Stop			Stop	
Grade		0%			0%			0%			0%	
Peak Hour Factor	1.00	1.00	1.00	1.00	1.00	1.00	1.00	1.00	1.00	1.00	1.00	1.00
Hourly flow rate (vph)	0	1230	10	0	1440	20	0	0	10	0	0	10
Pedestrians												
Lane Width (ft)												
Walking Speed (ft/s)												
Percent Blockage												
Right turn flare (veh)												
Median type		None			None							
Median storage veh)												
Upstream signal (ft)												
pX, platoon unblocked												
vC, conflicting volume	1460			1240			1965	2695	620	2075	2690	730
vC1, stage 1 conf vol												
vC2, stage 2 conf vol												
vCu, unblocked vol	1460			1240			1965	2695	620	2075	2690	730
tC, single (s)	4.1			4.1			7.5	6.5	6.9	7.5	6.5	6.9
tC, 2 stage (s)												
tF (s)	2.2			2.2			3.5	4.0	3.3	3.5	4.0	3.3
p0 queue free %	100			100			100	100	98	100	100	97
cM capacity (veh/h)	459			557			37	21	431	30	21	365

Direction, Lane #	EB 1	EB 2	WB 1	WB 2	NB 1	SB 1
Volume Total	820	420	960	500	10	10
Volume Left	0	0	0	0	0	0
Volume Right	0	10	0	20	10	10
cSH	1700	1700	1700	1700	431	365
Volume to Capacity	0.48	0.25	0.56	0.29	0.02	0.03
Queue Length 95th (ft)	0	0	0	0	2	2
Control Delay (s)	0.0	0.0	0.0	0.0	13.6	15.1
Lane LOS					B	C
Approach Delay (s)	0.0		0.0		13.6	15.1
Approach LOS					B	C

Intersection Summary			
Average Delay	0.1		
Intersection Capacity Utilization	46.6%	ICU Level of Service	A
Analysis Period (min)	15		

Intersection	
Int Delay, s/veh	0.1

Movement	EBL	EBT	EBR	WBL	WBT	WBR	NBL	NBT	NBR	SBL	SBT	SBR
Traffic Vol, veh/h	0	1230	10	0	1440	20	0	0	10	0	0	10
Future Vol, veh/h	0	1230	10	0	1440	20	0	0	10	0	0	10
Conflicting Peds, #/hr	0	0	0	0	0	0	0	0	0	0	0	0
Sign Control	Free	Free	Free	Free	Free	Free	Stop	Stop	Stop	Stop	Stop	Stop
RT Channelized	-	-	None	-	-	None	-	-	None	-	-	None
Storage Length	-	-	-	-	-	-	-	-	0	-	-	0
Veh in Median Storage, #	-	0	-	-	0	-	-	0	-	-	0	-
Grade, %	-	0	-	-	0	-	-	0	-	-	0	-
Peak Hour Factor	100	100	100	100	100	100	100	100	100	100	100	100
Heavy Vehicles, %	2	2	2	2	2	2	2	2	2	2	2	2
Mvmt Flow	0	1230	10	0	1440	20	0	0	10	0	0	10

Major/Minor	Major1			Major2			Minor1			Minor2		
Conflicting Flow All	1460	0	0	1240	0	0	1955	2695	620	2065	2690	730
Stage 1	-	-	-	-	-	-	1235	1235	-	1450	1450	-
Stage 2	-	-	-	-	-	-	720	1460	-	615	1240	-
Critical Hdwy	4.14	-	-	4.14	-	-	7.54	6.54	6.94	7.54	6.54	6.94
Critical Hdwy Stg 1	-	-	-	-	-	-	6.54	5.54	-	6.54	5.54	-
Critical Hdwy Stg 2	-	-	-	-	-	-	6.54	5.54	-	6.54	5.54	-
Follow-up Hdwy	2.22	-	-	2.22	-	-	3.52	4.02	3.32	3.52	4.02	3.32
Pot Cap-1 Maneuver	459	-	-	557	-	-	38	21	431	32	21	365
Stage 1	-	-	-	-	-	-	187	247	-	137	194	-
Stage 2	-	-	-	-	-	-	385	192	-	445	245	-
Platoon blocked, %		-	-		-	-						
Mov Cap-1 Maneuver	459	-	-	557	-	-	37	21	431	31	21	365
Mov Cap-2 Maneuver	-	-	-	-	-	-	37	21	-	31	21	-
Stage 1	-	-	-	-	-	-	187	247	-	137	194	-
Stage 2	-	-	-	-	-	-	374	192	-	435	245	-

Approach	EB	WB	NB	SB
HCM Control Delay, s	0	0	13.6	15.1
HCM LOS			B	C

Minor Lane/Major Mvmt	NBLn1	EBL	EBT	EBR	WBL	WBT	WBR	SBLn1
Capacity (veh/h)	431	459	-	-	557	-	-	365
HCM Lane V/C Ratio	0.023	-	-	-	-	-	-	0.027
HCM Control Delay (s)	13.6	0	-	-	0	-	-	15.1
HCM Lane LOS	B	A	-	-	A	-	-	C
HCM 95th %tile Q(veh)	0.1	0	-	-	0	-	-	0.1

Movement	EBL	EBT	EBR	WBL	WBT	WBR	NBL	NBT	NBR	SBL	SBT	SBR
Right Turn Channelized			MOYes									MOYes
Traffic Volume (veh/h)	0	330	0	30	1000	0	0	0	0	20	0	0
Future Volume (veh/h)	0	330	0	30	1000	0	0	0	0	20	0	0
Peak Hour Factor	1.00	1.00	1.00	1.00	1.00	1.00	1.00	1.00	1.00	1.00	1.00	1.00
Hourly flow rate (vph)	0	330	0	30	1000	0	0	0	0	20	0	0
Approach Volume (veh/h)		330			1030			0			20	
Crossing Volume (veh/h)		50			0			350			1030	
High Capacity (veh/h)		1332			1385			1052			607	
High v/c (veh/h)		0.25			0.74			0.00			0.03	
Low Capacity (veh/h)		1113			1161			860			470	
Low v/c (veh/h)		0.30			0.89			0.00			0.04	

Intersection Summary			
Maximum v/c High	0.74		
Maximum v/c Low	0.89		
Intersection Capacity Utilization	78.2%	ICU Level of Service	D

Intersection	
Intersection Delay, s/veh	127.8
Intersection LOS	F

Approach	EB	WB	NB	SB
Entry Lanes	1	1	0	1
Conflicting Circle Lanes	1	1	1	1
Adj Approach Flow, veh/h	330	1030	0	20
Demand Flow Rate, veh/h	455	1483	0	28
Vehicles Circulating, veh/h	71	0	483	1483
Vehicles Exiting, veh/h	1440	483	43	0
Follow-Up Headway, s	3.186	3.186	3.186	3.186
Ped Vol Crossing Leg, #/h	0	0	0	0
Ped Cap Adj	1.000	1.000	1.000	1.000
Approach Delay, s/veh	10.4	167.4	0.0	22.6
Approach LOS	B	F	-	C

Lane	Left	Bypass	Left	Left	Bypass
Designated Moves	T	R	LT	L	R
Assumed Moves	T	R	LT	L	R
RT Channelized		Free			Free
Lane Util	1.000		1.000	1.000	
Critical Headway, s	5.193		5.193	5.193	
Entry Flow, veh/h	455	0	1483	28	0
Cap Entry Lane, veh/h	1052	2898	1130	256	3024
Entry HV Adj Factor	0.725	0.725	0.695	0.714	0.694
Flow Entry, veh/h	330	0	1030	20	0
Cap Entry, veh/h	763	2100	785	183	2100
V/C Ratio	0.432	0.000	1.312	0.109	0.000
Control Delay, s/veh	10.4	0.0	167.4	22.6	0.0
LOS	B	A	F	C	A
95th %tile Queue, veh	2	0	40	0	0

Movement	EBL	EBT	EBR	WBL	WBT	WBR	NBL	NBT	NBR	SBL	SBT	SBR
Right Turn Channelized			MOYes			MOYes			MOYes			
Traffic Volume (veh/h)	0	110	0	0	280	0	770	0	0	0	0	0
Future Volume (veh/h)	0	110	0	0	280	0	770	0	0	0	0	0
Peak Hour Factor	1.00	1.00	1.00	1.00	1.00	1.00	1.00	1.00	1.00	1.00	1.00	1.00
Hourly flow rate (vph)	0	110	0	0	280	0	770	0	0	0	0	0
Approach Volume (veh/h)		110			280			770			0	
Crossing Volume (veh/h)		0			770			110			1050	
High Capacity (veh/h)		1385			751			1271			597	
High v/c (veh/h)		0.08			0.37			0.61			0.00	
Low Capacity (veh/h)		1161			594			1058			461	
Low v/c (veh/h)		0.09			0.47			0.73			0.00	

Intersection Summary			
Maximum v/c High	0.61		
Maximum v/c Low	0.73		
Intersection Capacity Utilization	75.4%	ICU Level of Service	D

Intersection	
Intersection Delay, s/veh	98.8
Intersection LOS	F

Approach	EB	WB	NB	SB
Entry Lanes	1	1	1	0
Conflicting Circle Lanes	1	1	1	1
Adj Approach Flow, veh/h	110	280	770	0
Demand Flow Rate, veh/h	152	403	1109	0
Vehicles Circulating, veh/h	0	1109	152	1512
Vehicles Exiting, veh/h	1512	152	0	0
Follow-Up Headway, s	3.186	3.186	3.186	3.186
Ped Vol Crossing Leg, #/h	0	0	0	0
Ped Cap Adj	1.000	1.000	1.000	1.000
Approach Delay, s/veh	5.8	121.4	103.9	0.0
Approach LOS	A	F	F	-

Lane	Left	Bypass	Left	Bypass	Left	Bypass
Designated Moves	T	R	T	R	L	R
Assumed Moves	T	R	T	R	L	R
RT Channelized		Free		Free		Free
Lane Util	1.000		1.000		1.000	
Critical Headway, s	5.193		5.193		5.193	
Entry Flow, veh/h	152	0	403	0	1109	0
Cap Entry Lane, veh/h	1130	2898	373	3024	971	2142
Entry HV Adj Factor	0.725	0.725	0.694	0.694	0.694	0.980
Flow Entry, veh/h	110	0	280	0	770	0
Cap Entry, veh/h	819	2100	259	2100	674	2100
V/C Ratio	0.135	0.000	1.081	0.000	1.143	0.000
Control Delay, s/veh	5.8	0.0	121.4	0.0	103.9	0.0
LOS	A	A	F	A	F	A
95th %tile Queue, veh	0	0	12	0	24	0

Movement	EBL	EBT	EBR	WBL	WBT	WBR	NBL	NBT	NBR	SBL	SBT	SBR
Lane Configurations												
Traffic Volume (veh/h)	0	1230	10	0	1440	10	0	0	10	0	0	20
Future Volume (Veh/h)	0	1230	10	0	1440	10	0	0	10	0	0	20
Sign Control		Free			Free			Stop			Stop	
Grade		0%			0%			0%			0%	
Peak Hour Factor	1.00	1.00	1.00	1.00	1.00	1.00	1.00	1.00	1.00	1.00	1.00	1.00
Hourly flow rate (vph)	0	1230	10	0	1440	10	0	0	10	0	0	20
Pedestrians												
Lane Width (ft)												
Walking Speed (ft/s)												
Percent Blockage												
Right turn flare (veh)												
Median type		None			None							
Median storage veh)												
Upstream signal (ft)												
pX, platoon unblocked												
vC, conflicting volume	1450			1240			1975	2685	620	2070	2685	725
vC1, stage 1 conf vol												
vC2, stage 2 conf vol												
vCu, unblocked vol	1450			1240			1975	2685	620	2070	2685	725
tC, single (s)	4.6			4.8			7.5	6.5	6.9	7.5	6.5	6.9
tC, 2 stage (s)												
tF (s)	2.5			2.6			3.5	4.0	3.3	3.5	4.0	3.3
p0 queue free %	100			100			100	100	98	100	100	95
cM capacity (veh/h)	359			402			35	22	431	31	22	368

Direction, Lane #	EB 1	EB 2	WB 1	WB 2	NB 1	SB 1
Volume Total	820	420	960	490	10	20
Volume Left	0	0	0	0	0	0
Volume Right	0	10	0	10	10	20
cSH	1700	1700	1700	1700	431	368
Volume to Capacity	0.48	0.25	0.56	0.29	0.02	0.05
Queue Length 95th (ft)	0	0	0	0	2	4
Control Delay (s)	0.0	0.0	0.0	0.0	13.6	15.4
Lane LOS					B	C
Approach Delay (s)	0.0		0.0		13.6	15.4
Approach LOS					B	C

Intersection Summary			
Average Delay	0.2		
Intersection Capacity Utilization	46.3%	ICU Level of Service	A
Analysis Period (min)	15		

Intersection	
Int Delay, s/veh	0.2

Movement	EBL	EBT	EBR	WBL	WBT	WBR	NBL	NBT	NBR	SBL	SBT	SBR
Traffic Vol, veh/h	0	1230	10	0	1440	10	0	0	10	0	0	20
Future Vol, veh/h	0	1230	10	0	1440	10	0	0	10	0	0	20
Conflicting Peds, #/hr	0	0	0	0	0	0	0	0	0	0	0	0
Sign Control	Free	Free	Free	Free	Free	Free	Stop	Stop	Stop	Stop	Stop	Stop
RT Channelized	-	-	None	-	-	None	-	-	None	-	-	None
Storage Length	-	-	-	-	-	-	-	-	0	-	-	0
Veh in Median Storage, #	-	0	-	-	0	-	-	0	-	-	0	-
Grade, %	-	0	-	-	0	-	-	0	-	-	0	-
Peak Hour Factor	100	100	100	100	100	100	100	100	100	100	100	100
Heavy Vehicles, %	26	26	26	36	36	36	2	2	2	2	2	2
Mvmt Flow	0	1230	10	0	1440	10	0	0	10	0	0	20

Major/Minor	Major1			Major2			Minor1			Minor2		
Conflicting Flow All	1450	0	0	1240	0	0	1955	2685	620	2060	2685	725
Stage 1	-	-	-	-	-	-	1235	1235	-	1445	1445	-
Stage 2	-	-	-	-	-	-	720	1450	-	615	1240	-
Critical Hdwy	4.62	-	-	4.82	-	-	7.54	6.54	6.94	7.54	6.54	6.94
Critical Hdwy Stg 1	-	-	-	-	-	-	6.54	5.54	-	6.54	5.54	-
Critical Hdwy Stg 2	-	-	-	-	-	-	6.54	5.54	-	6.54	5.54	-
Follow-up Hdwy	2.46	-	-	2.56	-	-	3.52	4.02	3.32	3.52	4.02	3.32
Pot Cap-1 Maneuver	359	-	-	402	-	-	38	22	431	32	22	368
Stage 1	-	-	-	-	-	-	187	247	-	138	195	-
Stage 2	-	-	-	-	-	-	385	194	-	445	245	-
Platoon blocked, %		-	-		-	-						
Mov Cap-1 Maneuver	359	-	-	402	-	-	36	22	431	31	22	368
Mov Cap-2 Maneuver	-	-	-	-	-	-	36	22	-	31	22	-
Stage 1	-	-	-	-	-	-	187	247	-	138	195	-
Stage 2	-	-	-	-	-	-	364	194	-	435	245	-

Approach	EB	WB	NB	SB
HCM Control Delay, s	0	0	13.6	15.3
HCM LOS			B	C

Minor Lane/Major Mvmt	NBLn1	EBL	EBT	EBR	WBL	WBT	WBR	SBLn1
Capacity (veh/h)	431	359	-	-	402	-	-	368
HCM Lane V/C Ratio	0.023	-	-	-	-	-	-	0.054
HCM Control Delay (s)	13.6	0	-	-	0	-	-	15.3
HCM Lane LOS	B	A	-	-	A	-	-	C
HCM 95th %tile Q(veh)	0.1	0	-	-	0	-	-	0.2

Movement	EBL	EBT	WBU	WBT	WBR	SBL	SBR
Lane Configurations							
Traffic Volume (veh/h)	0	1230	140	1650	0	0	0
Future Volume (Veh/h)	0	1230	140	1650	0	0	0
Sign Control		Free		Free		Stop	
Grade		0%		0%		0%	
Peak Hour Factor	1.00	1.00	1.00	1.00	1.00	1.00	1.00
Hourly flow rate (vph)	0	1230	0	1650	0	0	0
Pedestrians							
Lane Width (ft)							
Walking Speed (ft/s)							
Percent Blockage							
Right turn flare (veh)							
Median type		None		None			
Median storage veh)							
Upstream signal (ft)							
pX, platoon unblocked			0.00				
vC, conflicting volume	1650		0			2265	825
vC1, stage 1 conf vol							
vC2, stage 2 conf vol							
vCu, unblocked vol	1650		0			2265	825
tC, single (s)	4.1		0.0			6.8	6.9
tC, 2 stage (s)							
tF (s)	2.2		0.0			3.5	3.3
p0 queue free %	100		0			100	100
cM capacity (veh/h)	387		0			34	316

Direction, Lane #	EB 1	EB 2	WB 1	WB 2	WB 3
Volume Total	615	615	825	825	0
Volume Left	0	0	0	0	0
Volume Right	0	0	0	0	0
cSH	1700	1700	1700	1700	1700
Volume to Capacity	0.36	0.36	0.49	0.49	0.00
Queue Length 95th (ft)	0	0	0	0	0
Control Delay (s)	0.0	0.0	0.0	0.0	0.0
Lane LOS					
Approach Delay (s)	0.0		0.0		
Approach LOS					

Intersection Summary			
Average Delay	0.0		
Intersection Capacity Utilization	44.6%	ICU Level of Service	A
Analysis Period (min)	15		

Movement	EBL	EBT	EBR	WBL	WBT	WBR	NBL	NBT	NBR	SBL	SBT	SBR
Right Turn Channelized						MOYes						MOYes
Traffic Volume (veh/h)	0	0	0	120	0	150	50	170	0	0	430	290
Future Volume (veh/h)	0	0	0	120	0	150	50	170	0	0	430	290
Peak Hour Factor	1.00	1.00	1.00	1.00	1.00	1.00	1.00	1.00	1.00	1.00	1.00	1.00
Hourly flow rate (vph)	0	0	0	120	0	150	50	170	0	0	430	290
Approach Volume (veh/h)		0			120			220			430	
Crossing Volume (veh/h)		550			220			0			170	
High Capacity (veh/h)		897			1166			1385			1212	
High v/c (veh/h)		0.00			0.10			0.16			0.35	
Low Capacity (veh/h)		722			962			1161			1005	
Low v/c (veh/h)		0.00			0.12			0.19			0.43	

Intersection Summary			
Maximum v/c High	0.35		
Maximum v/c Low	0.43		
Intersection Capacity Utilization	47.1%	ICU Level of Service	A

Intersection	
Intersection Delay, s/veh	4.8
Intersection LOS	A

Approach	EB	WB	NB	SB
Entry Lanes	0	1	1	1
Conflicting Circle Lanes	1	1	1	1
Adj Approach Flow, veh/h	0	270	220	720
Demand Flow Rate, veh/h	0	275	224	735
Vehicles Circulating, veh/h	561	224	0	173
Vehicles Exiting, veh/h	51	0	561	173
Follow-Up Headway, s	3.186	3.186	3.186	3.186
Ped Vol Crossing Leg, #/h	0	0	0	0
Ped Cap Adj	1.000	1.000	1.000	1.000
Approach Delay, s/veh	0.0	2.4	5.0	5.6
Approach LOS	-	A	A	A

Lane	Left	Bypass	Left	Left	Bypass
Designated Moves	LT	R	LT	T	R
Assumed Moves	LT	R	LT	T	R
RT Channelized		Free			Free
Lane Util	1.000		1.000	1.000	
Critical Headway, s	5.193		5.193	5.193	
Entry Flow, veh/h	122	153	224	439	296
Cap Entry Lane, veh/h	903	2142	1130	950	2142
Entry HV Adj Factor	0.984	0.980	0.980	0.980	0.980
Flow Entry, veh/h	120	150	220	430	290
Cap Entry, veh/h	888	2100	1108	932	2100
V/C Ratio	0.135	0.071	0.198	0.462	0.138
Control Delay, s/veh	5.4	0.0	5.0	9.4	0.0
LOS	A	A	A	A	A
95th %tile Queue, veh	0	0	1	2	0

Movement	EBL	EBT	EBR	WBL	WBT	WBR	NBL	NBT	NBR	SBL	SBT	SBR
Lane Configurations												
Traffic Volume (veh/h)	210	0	0	0	0	0	0	0	0	220	0	0
Future Volume (Veh/h)	210	0	0	0	0	0	0	0	0	220	0	0
Sign Control		Stop			Stop			Free			Free	
Grade		0%			0%			0%			0%	
Peak Hour Factor	1.00	1.00	1.00	1.00	1.00	1.00	1.00	1.00	1.00	1.00	1.00	1.00
Hourly flow rate (vph)	210	0	0	0	0	0	0	0	0	220	0	0
Pedestrians												
Lane Width (ft)												
Walking Speed (ft/s)												
Percent Blockage												
Right turn flare (veh)												
Median type								None			None	
Median storage veh)												
Upstream signal (ft)												
pX, platoon unblocked												
vC, conflicting volume	440	440	0	440	440	0	0			0		
vC1, stage 1 conf vol												
vC2, stage 2 conf vol												
vCu, unblocked vol	440	440	0	440	440	0	0			0		
tC, single (s)	7.1	6.5	6.2	7.1	6.5	6.2	4.1			4.1		
tC, 2 stage (s)												
tF (s)	3.5	4.0	3.3	3.5	4.0	3.3	2.2			2.2		
p0 queue free %	56	100	100	100	100	100	100			86		
cM capacity (veh/h)	473	442	1085	473	442	1085	1623			1623		

Direction, Lane #	EB 1	NB 1	SB 1
Volume Total	210	0	220
Volume Left	210	0	220
Volume Right	0	0	0
cSH	473	1700	1623
Volume to Capacity	0.44	0.00	0.14
Queue Length 95th (ft)	56	0	12
Control Delay (s)	18.6	0.0	7.6
Lane LOS	C		A
Approach Delay (s)	18.6	0.0	7.6
Approach LOS	C		

Intersection Summary			
Average Delay	12.9		
Intersection Capacity Utilization	64.4%	ICU Level of Service	C
Analysis Period (min)	15		

Intersection	
Int Delay, s/veh	0

Movement	EBL	EBT	EBR	WBL	WBT	WBR	NBL	NBT	NBR	SBL	SBT	SBR
Traffic Vol, veh/h	210	0	0	0	0	0	0	0	0	220	0	0
Future Vol, veh/h	210	0	0	0	0	0	0	0	0	220	0	0
Conflicting Peds, #/hr	0	0	0	0	0	0	0	0	0	0	0	0
Sign Control	Stop	Stop	Stop	Stop	Stop	Stop	Free	Free	Free	Free	Free	Free
RT Channelized	-	-	None	-	-	None	-	-	None	-	-	None
Storage Length	-	-	-	-	-	-	-	-	-	-	-	-
Veh in Median Storage, #	-	0	-	-	0	-	-	0	-	-	0	-
Grade, %	-	0	-	-	0	-	-	0	-	-	0	-
Peak Hour Factor	100	100	100	100	100	100	100	100	100	100	100	100
Heavy Vehicles, %	2	2	2	2	2	2	2	2	2	2	2	2
Mvmt Flow	210	0	0	0	0	0	0	0	0	220	0	0

Major/Minor	Minor2			Major1			Major2		
Conflicting Flow All	0	440	0	0	0	0	0	0	0
Stage 1	0	440	-	-	-	-	-	-	-
Stage 2	0	0	-	-	-	-	-	-	-
Critical Hdwy	6.42	6.52	-	-	-	-	4.12	-	-
Critical Hdwy Stg 1	-	-	-	-	-	-	-	-	-
Critical Hdwy Stg 2	5.42	5.52	-	-	-	-	-	-	-
Follow-up Hdwy	3.518	4.018	-	-	-	-	2.218	-	-
Pot Cap-1 Maneuver	-	511	-	-	-	-	-	-	-
Stage 1	-	-	-	-	-	-	-	-	-
Stage 2	-	-	-	-	-	-	-	-	-
Platoon blocked, %					-	-		-	-
Mov Cap-1 Maneuver	-	0	-	-	-	-	-	-	-
Mov Cap-2 Maneuver	-	0	-	-	-	-	-	-	-
Stage 1	-	0	-	-	-	-	-	-	-
Stage 2	-	0	-	-	-	-	-	-	-

Approach	EB	NB	SB
HCM Control Delay, s		0	
HCM LOS	-		

Minor Lane/Major Mvmt	NBL	NBT	NBR	EBLn1	SBL	SBT	SBR
Capacity (veh/h)	-	-	-	-	-	-	-
HCM Lane V/C Ratio	-	-	-	-	-	-	-
HCM Control Delay (s)	0	-	-	-	-	-	-
HCM Lane LOS	A	-	-	-	-	-	-
HCM 95th %tile Q(veh)	-	-	-	-	-	-	-

Movement	EBL	EBT	EBR	WBL	WBT	WBR	NBL	NBT	NBR	SBL	SBT	SBR
Lane Configurations												
Traffic Volume (veh/h)	0	0	0	0	0	150	0	210	0	0	220	540
Future Volume (Veh/h)	0	0	0	0	0	150	0	210	0	0	220	540
Sign Control		Stop			Stop			Free			Free	
Grade		0%			0%			0%			0%	
Peak Hour Factor	1.00	1.00	1.00	1.00	1.00	1.00	1.00	1.00	1.00	1.00	1.00	1.00
Hourly flow rate (vph)	0	0	0	0	0	150	0	210	0	0	220	540
Pedestrians												
Lane Width (ft)												
Walking Speed (ft/s)												
Percent Blockage												
Right turn flare (veh)												
Median type								None			None	
Median storage veh)												
Upstream signal (ft)												
pX, platoon unblocked												
vC, conflicting volume	850	700	490	700	970	210	760			210		
vC1, stage 1 conf vol												
vC2, stage 2 conf vol												
vCu, unblocked vol	850	700	490	700	970	210	760			210		
tC, single (s)	7.1	6.5	6.2	7.1	6.5	6.2	4.1			4.1		
tC, 2 stage (s)												
tF (s)	3.5	4.0	3.3	3.5	4.0	3.3	2.2			2.2		
p0 queue free %	100	100	100	100	100	82	100			100		
cM capacity (veh/h)	230	363	578	354	253	830	852			1361		

Direction, Lane #	WB 1	NB 1	SB 1
Volume Total	150	210	760
Volume Left	0	0	0
Volume Right	150	0	540
cSH	830	1700	1700
Volume to Capacity	0.18	0.12	0.45
Queue Length 95th (ft)	16	0	0
Control Delay (s)	10.3	0.0	0.0
Lane LOS	B		
Approach Delay (s)	10.3	0.0	0.0
Approach LOS	B		

Intersection Summary			
Average Delay	1.4		
Intersection Capacity Utilization	64.4%	ICU Level of Service	C
Analysis Period (min)	15		

Intersection	
Int Delay, s/veh	1.4

Movement	EBL	EBT	EBR	WBL	WBT	WBR	NBL	NBT	NBR	SBL	SBT	SBR
Traffic Vol, veh/h	0	0	0	0	0	150	0	210	0	0	220	540
Future Vol, veh/h	0	0	0	0	0	150	0	210	0	0	220	540
Conflicting Peds, #/hr	0	0	0	0	0	0	0	0	0	0	0	0
Sign Control	Stop	Stop	Stop	Stop	Stop	Stop	Free	Free	Free	Free	Free	Free
RT Channelized	-	-	None	-	-	None	-	-	None	-	-	None
Storage Length	-	-	-	-	-	-	-	-	-	-	-	-
Veh in Median Storage, #	-	0	-	-	0	-	-	0	-	-	0	-
Grade, %	-	0	-	-	0	-	-	0	-	-	0	-
Peak Hour Factor	100	100	100	100	100	100	100	100	100	100	100	100
Heavy Vehicles, %	2	2	2	2	2	2	2	2	2	2	2	2
Mvmt Flow	0	0	0	0	0	150	0	210	0	0	220	540

Major/Minor	Minor1			Major1			Major2		
Conflicting Flow All	700	970	210	760	0	0	210	0	0
Stage 1	210	210	-	-	-	-	-	-	-
Stage 2	490	760	-	-	-	-	-	-	-
Critical Hdwy	6.42	6.52	6.22	4.12	-	-	4.12	-	-
Critical Hdwy Stg 1	5.42	5.52	-	-	-	-	-	-	-
Critical Hdwy Stg 2	5.42	5.52	-	-	-	-	-	-	-
Follow-up Hdwy	3.518	4.018	3.318	2.218	-	-	2.218	-	-
Pot Cap-1 Maneuver	405	253	830	852	-	-	1361	-	-
Stage 1	825	728	-	-	-	-	-	-	-
Stage 2	616	414	-	-	-	-	-	-	-
Platoon blocked, %					-	-		-	-
Mov Cap-1 Maneuver	405	0	830	852	-	-	1361	-	-
Mov Cap-2 Maneuver	405	0	-	-	-	-	-	-	-
Stage 1	825	0	-	-	-	-	-	-	-
Stage 2	616	0	-	-	-	-	-	-	-

Approach	WB	NB	SB
HCM Control Delay, s	10.3	0	0
HCM LOS	B		

Minor Lane/Major Mvmt	NBL	NBT	NBR	WBLn1	SBL	SBT	SBR
Capacity (veh/h)	852	-	-	830	1361	-	-
HCM Lane V/C Ratio	-	-	-	0.181	-	-	-
HCM Control Delay (s)	0	-	-	10.3	0	-	-
HCM Lane LOS	A	-	-	B	A	-	-
HCM 95th %tile Q(veh)	0	-	-	0.7	0	-	-

Movement	EBL	EBT	EBR	WBL	WBT	WBR	NBL	NBT	NBR	SBL	SBT	SBR
Right Turn Channelized			MOYes						MOYes			
Traffic Volume (veh/h)	150	0	100	0	0	0	0	70	40	360	190	0
Future Volume (veh/h)	150	0	100	0	0	0	0	70	40	360	190	0
Peak Hour Factor	1.00	1.00	1.00	1.00	1.00	1.00	1.00	1.00	1.00	1.00	1.00	1.00
Hourly flow rate (vph)	150	0	100	0	0	0	0	70	40	360	190	0
Approach Volume (veh/h)		150			0			70			550	
Crossing Volume (veh/h)		550			220			510			0	
High Capacity (veh/h)		897			1166			926			1385	
High v/c (veh/h)		0.17			0.00			0.08			0.40	
Low Capacity (veh/h)		722			962			748			1161	
Low v/c (veh/h)		0.21			0.00			0.09			0.47	

Intersection Summary			
Maximum v/c High	0.40		
Maximum v/c Low	0.47		
Intersection Capacity Utilization	47.9%	ICU Level of Service	A

Intersection	
Intersection Delay, s/veh	7.3
Intersection LOS	A

Approach	EB	WB	NB	SB
Entry Lanes	1	0	1	1
Conflicting Circle Lanes	1	1	1	1
Adj Approach Flow, veh/h	250	0	110	550
Demand Flow Rate, veh/h	255	0	112	561
Vehicles Circulating, veh/h	561	224	520	0
Vehicles Exiting, veh/h	0	367	194	224
Follow-Up Headway, s	3.186	3.186	3.186	3.186
Ped Vol Crossing Leg, #/h	0	0	0	0
Ped Cap Adj	1.000	1.000	1.000	1.000
Approach Delay, s/veh	5.2	0.0	4.2	8.9
Approach LOS	A	-	A	A

Lane	Left	Bypass	Left	Bypass	Left
Designated Moves	LT	R	T	R	LT
Assumed Moves	LT	R	T	R	LT
RT Channelized		Free		Free	
Lane Util	1.000		1.000		1.000
Critical Headway, s	5.193		5.193		5.193
Entry Flow, veh/h	153	102	71	41	561
Cap Entry Lane, veh/h	645	2142	672	2142	1130
Entry HV Adj Factor	0.980	0.980	0.980	0.980	0.981
Flow Entry, veh/h	150	100	70	40	550
Cap Entry, veh/h	632	2100	659	2100	1108
V/C Ratio	0.237	0.048	0.106	0.019	0.496
Control Delay, s/veh	8.6	0.0	6.6	0.0	8.9
LOS	A	A	A	A	A
95th %tile Queue, veh	1	0	0	0	3

Movement	EBL	EBT	EBR	WBL	WBT	WBR	NBL	NBT	NBR	SBL	SBT	SBR
Right Turn Channelized						MOYes						MOYes
Traffic Volume (veh/h)	0	0	0	80	0	330	30	330	0	0	270	560
Future Volume (veh/h)	0	0	0	80	0	330	30	330	0	0	270	560
Peak Hour Factor	1.00	1.00	1.00	1.00	1.00	1.00	1.00	1.00	1.00	1.00	1.00	1.00
Hourly flow rate (vph)	0	0	0	80	0	330	30	330	0	0	270	560
Approach Volume (veh/h)		0			80			360			270	
Crossing Volume (veh/h)		350			360			0			110	
High Capacity (veh/h)		1052			1044			1385			1271	
High v/c (veh/h)		0.00			0.08			0.26			0.21	
Low Capacity (veh/h)		860			853			1161			1058	
Low v/c (veh/h)		0.00			0.09			0.31			0.26	

Intersection Summary			
Maximum v/c High	0.26		
Maximum v/c Low	0.31		
Intersection Capacity Utilization	62.6%	ICU Level of Service	B

Intersection	
Intersection Delay, s/veh	2.8
Intersection LOS	A

Approach	EB	WB	NB	SB
Entry Lanes	0	1	1	1
Conflicting Circle Lanes	1	1	1	1
Adj Approach Flow, veh/h	0	410	360	830
Demand Flow Rate, veh/h	0	419	368	846
Vehicles Circulating, veh/h	357	368	0	113
Vehicles Exiting, veh/h	31	0	357	337
Follow-Up Headway, s	3.186	3.186	3.186	3.186
Ped Vol Crossing Leg, #/h	0	0	0	0
Ped Cap Adj	1.000	1.000	1.000	1.000
Approach Delay, s/veh	0.0	1.1	6.4	2.1
Approach LOS	-	A	A	A

Lane	Left	Bypass	Left	Left	Bypass
Designated Moves	LT	R	LT	T	R
Assumed Moves	LT	R	LT	T	R
RT Channelized		Free			Free
Lane Util	1.000		1.000	1.000	
Critical Headway, s	5.193		5.193	5.193	
Entry Flow, veh/h	82	337	368	275	571
Cap Entry Lane, veh/h	782	2142	1130	1009	2142
Entry HV Adj Factor	0.976	0.980	0.979	0.980	0.980
Flow Entry, veh/h	80	330	360	270	560
Cap Entry, veh/h	763	2100	1107	989	2100
V/C Ratio	0.105	0.157	0.326	0.272	0.267
Control Delay, s/veh	5.8	0.0	6.4	6.4	0.0
LOS	A	A	A	A	A
95th %tile Queue, veh	0	1	1	1	1

Movement	EBL	EBT	EBR	WBL	WBT	WBR	NBL	NBT	NBR	SBL	SBT	SBR
Right Turn Channelized			MOYes						MOYes			
Traffic Volume (veh/h)	320	0	80	0	0	0	0	40	30	250	100	0
Future Volume (veh/h)	320	0	80	0	0	0	0	40	30	250	100	0
Peak Hour Factor	1.00	1.00	1.00	1.00	1.00	1.00	1.00	1.00	1.00	1.00	1.00	1.00
Hourly flow rate (vph)	320	0	80	0	0	0	0	40	30	250	100	0
Approach Volume (veh/h)		320			0			40			350	
Crossing Volume (veh/h)		350			360			570			0	
High Capacity (veh/h)		1052			1044			883			1385	
High v/c (veh/h)		0.30			0.00			0.05			0.25	
Low Capacity (veh/h)		860			853			709			1161	
Low v/c (veh/h)		0.37			0.00			0.06			0.30	

Intersection Summary			
Maximum v/c High	0.30		
Maximum v/c Low	0.37		
Intersection Capacity Utilization	46.7%	ICU Level of Service	A

Intersection	
Intersection Delay, s/veh	6.9
Intersection LOS	A

Approach	EB	WB	NB	SB
Entry Lanes	1	0	1	1
Conflicting Circle Lanes	1	1	1	1
Adj Approach Flow, veh/h	400	0	70	350
Demand Flow Rate, veh/h	408	0	72	357
Vehicles Circulating, veh/h	357	367	581	0
Vehicles Exiting, veh/h	0	255	102	367
Follow-Up Headway, s	3.186	3.186	3.186	3.186
Ped Vol Crossing Leg, #/h	0	0	0	0
Ped Cap Adj	1.000	1.000	1.000	1.000
Approach Delay, s/veh	7.9	0.0	3.7	6.3
Approach LOS	A	-	A	A

Lane	Left	Bypass	Left	Bypass	Left
Designated Moves	LT	R	T	R	LT
Assumed Moves	LT	R	T	R	LT
RT Channelized		Free		Free	
Lane Util	1.000		1.000		1.000
Critical Headway, s	5.193		5.193		5.193
Entry Flow, veh/h	326	82	41	31	357
Cap Entry Lane, veh/h	791	2142	632	2142	1130
Entry HV Adj Factor	0.982	0.980	0.980	0.980	0.980
Flow Entry, veh/h	320	80	40	30	350
Cap Entry, veh/h	776	2100	620	2100	1108
V/C Ratio	0.412	0.038	0.065	0.014	0.316
Control Delay, s/veh	9.9	0.0	6.5	0.0	6.3
LOS	A	A	A	A	A
95th %tile Queue, veh	2	0	0	0	1

Movement	EBL	EBT	WBT	WBR	SBL	SBR
Lane Configurations						
Traffic Volume (veh/h)	0	1810	2080	210	0	0
Future Volume (Veh/h)	0	1810	2080	210	0	0
Sign Control		Free	Free		Stop	
Grade		0%	0%		0%	
Peak Hour Factor	1.00	1.00	1.00	1.00	1.00	1.00
Hourly flow rate (vph)	0	1810	2080	210	0	0
Pedestrians						
Lane Width (ft)						
Walking Speed (ft/s)						
Percent Blockage						
Right turn flare (veh)						
Median type		None	None			
Median storage veh)						
Upstream signal (ft)						
pX, platoon unblocked						
vC, conflicting volume	2080				2985	1040
vC1, stage 1 conf vol						
vC2, stage 2 conf vol						
vCu, unblocked vol	2080				2985	1040
tC, single (s)	4.7				6.8	6.9
tC, 2 stage (s)						
tF (s)	2.5				3.5	3.3
p0 queue free %	100				100	100
cM capacity (veh/h)	180				11	227

Direction, Lane #	EB 1	EB 2	WB 1	WB 2	WB 3
Volume Total	905	905	1040	1040	210
Volume Left	0	0	0	0	0
Volume Right	0	0	0	0	210
cSH	1700	1700	1700	1700	1700
Volume to Capacity	0.53	0.53	0.61	0.61	0.12
Queue Length 95th (ft)	0	0	0	0	0
Control Delay (s)	0.0	0.0	0.0	0.0	0.0
Lane LOS					
Approach Delay (s)	0.0		0.0		
Approach LOS					

Intersection Summary			
Average Delay	0.0		
Intersection Capacity Utilization	60.8%	ICU Level of Service	B
Analysis Period (min)	15		

Movement	EBL	EBT	WBT	WBR	SBL	SBR
Lane Configurations						
Traffic Volume (veh/h)	0	1700	2310	10	0	0
Future Volume (Veh/h)	0	1700	2310	10	0	0
Sign Control		Free	Free		Stop	
Grade		0%	0%		0%	
Peak Hour Factor	1.00	1.00	1.00	1.00	1.00	1.00
Hourly flow rate (vph)	0	1700	2310	10	0	0
Pedestrians						
Lane Width (ft)						
Walking Speed (ft/s)						
Percent Blockage						
Right turn flare (veh)						
Median type		None	None			
Median storage veh)						
Upstream signal (ft)						
pX, platoon unblocked						
vC, conflicting volume	2320				3160	1155
vC1, stage 1 conf vol						
vC2, stage 2 conf vol						
vCu, unblocked vol	2320				3160	1155
tC, single (s)	4.7				6.8	6.9
tC, 2 stage (s)						
tF (s)	2.5				3.5	3.3
p0 queue free %	100				100	100
cM capacity (veh/h)	140				8	190

Direction, Lane #	EB 1	EB 2	WB 1	WB 2	WB 3
Volume Total	850	850	1155	1155	10
Volume Left	0	0	0	0	0
Volume Right	0	0	0	0	10
cSH	1700	1700	1700	1700	1700
Volume to Capacity	0.50	0.50	0.68	0.68	0.01
Queue Length 95th (ft)	0	0	0	0	0
Control Delay (s)	0.0	0.0	0.0	0.0	0.0
Lane LOS					
Approach Delay (s)	0.0		0.0		
Approach LOS					

Intersection Summary			
Average Delay	0.0		
Intersection Capacity Utilization	67.2%	ICU Level of Service	C
Analysis Period (min)	15		

Movement	EBL	EBT	EBR	WBL	WBT	WBR	NBL	NBT	NBR	SBL	SBT	SBR
Lane Configurations												
Traffic Volume (veh/h)	0	1620	80	0	2300	30	0	0	20	0	0	10
Future Volume (Veh/h)	0	1620	80	0	2300	30	0	0	20	0	0	10
Sign Control		Free			Free			Stop			Stop	
Grade		0%			0%			0%			0%	
Peak Hour Factor	1.00	1.00	1.00	1.00	1.00	1.00	1.00	1.00	1.00	1.00	1.00	1.00
Hourly flow rate (vph)	0	1620	80	0	2300	30	0	0	20	0	0	10
Pedestrians												
Lane Width (ft)												
Walking Speed (ft/s)												
Percent Blockage												
Right turn flare (veh)												
Median type		None			None							
Median storage veh)												
Upstream signal (ft)												
pX, platoon unblocked												
vC, conflicting volume	2330			1700			2820	3990	850	3145	4015	1165
vC1, stage 1 conf vol												
vC2, stage 2 conf vol												
vCu, unblocked vol	2330			1700			2820	3990	850	3145	4015	1165
tC, single (s)	4.1			4.1			7.5	6.5	6.9	7.5	6.5	6.9
tC, 2 stage (s)												
tF (s)	2.2			2.2			3.5	4.0	3.3	3.5	4.0	3.3
p0 queue free %	100			100			100	100	93	100	100	95
cM capacity (veh/h)	210			371			8	3	304	4	3	187

Direction, Lane #	EB 1	EB 2	WB 1	WB 2	NB 1	SB 1
Volume Total	1080	620	1533	797	20	10
Volume Left	0	0	0	0	0	0
Volume Right	0	80	0	30	20	10
cSH	1700	1700	1700	1700	304	187
Volume to Capacity	0.64	0.36	0.90	0.47	0.07	0.05
Queue Length 95th (ft)	0	0	0	0	5	4
Control Delay (s)	0.0	0.0	0.0	0.0	17.7	25.3
Lane LOS					C	D
Approach Delay (s)	0.0		0.0		17.7	25.3
Approach LOS					C	D

Intersection Summary			
Average Delay	0.1		
Intersection Capacity Utilization	74.5%	ICU Level of Service	D
Analysis Period (min)	15		

Intersection	
Int Delay, s/veh	0.1

Movement	EBL	EBT	EBR	WBL	WBT	WBR	NBL	NBT	NBR	SBL	SBT	SBR
Traffic Vol, veh/h	0	1620	80	0	2300	30	0	0	20	0	0	10
Future Vol, veh/h	0	1620	80	0	2300	30	0	0	20	0	0	10
Conflicting Peds, #/hr	0	0	0	0	0	0	0	0	0	0	0	0
Sign Control	Free	Free	Free	Free	Free	Free	Stop	Stop	Stop	Stop	Stop	Stop
RT Channelized	-	-	None	-	-	None	-	-	None	-	-	None
Storage Length	-	-	-	-	-	-	-	-	0	-	-	0
Veh in Median Storage, #	-	0	-	-	0	-	-	0	-	-	0	-
Grade, %	-	0	-	-	0	-	-	0	-	-	0	-
Peak Hour Factor	100	100	100	100	100	100	100	100	100	100	100	100
Heavy Vehicles, %	2	2	2	2	2	2	2	2	2	2	2	2
Mvmt Flow	0	1620	80	0	2300	30	0	0	20	0	0	10

Major/Minor	Major1			Major2			Minor1			Minor2		
Conflicting Flow All	2330	0	0	1700	0	0	2810	3990	850	3125	4015	1165
Stage 1	-	-	-	-	-	-	1660	1660	-	2315	2315	-
Stage 2	-	-	-	-	-	-	1150	2330	-	810	1700	-
Critical Hdwy	4.14	-	-	4.14	-	-	7.54	6.54	6.94	7.54	6.54	6.94
Critical Hdwy Stg 1	-	-	-	-	-	-	6.54	5.54	-	6.54	5.54	-
Critical Hdwy Stg 2	-	-	-	-	-	-	6.54	5.54	-	6.54	5.54	-
Follow-up Hdwy	2.22	-	-	2.22	-	-	3.52	4.02	3.32	3.52	4.02	3.32
Pot Cap-1 Maneuver	210	-	-	371	-	-	8	3	304	5	3	187
Stage 1	-	-	-	-	-	-	101	153	-	39	71	-
Stage 2	-	-	-	-	-	-	211	70	-	340	146	-
Platoon blocked, %		-	-		-	-						
Mov Cap-1 Maneuver	210	-	-	371	-	-	8	3	304	5	3	187
Mov Cap-2 Maneuver	-	-	-	-	-	-	8	3	-	5	3	-
Stage 1	-	-	-	-	-	-	101	153	-	39	71	-
Stage 2	-	-	-	-	-	-	200	70	-	318	146	-

Approach	EB	WB	NB	SB
HCM Control Delay, s	0	0	17.7	25.3
HCM LOS			C	D

Minor Lane/Major Mvmt	NBLn1	EBL	EBT	EBR	WBL	WBT	WBR	SBLn1
Capacity (veh/h)	304	210	-	-	371	-	-	187
HCM Lane V/C Ratio	0.066	-	-	-	-	-	-	0.053
HCM Control Delay (s)	17.7	0	-	-	0	-	-	25.3
HCM Lane LOS	C	A	-	-	A	-	-	D
HCM 95th %tile Q(veh)	0.2	0	-	-	0	-	-	0.2

Movement	EBL	EBT	EBR	WBL	WBT	WBR	NBL	NBT	NBR	SBL	SBT	SBR
Lane Configurations												
Traffic Volume (veh/h)	0	1640	10	0	2330	10	0	0	10	0	0	10
Future Volume (Veh/h)	0	1640	10	0	2330	10	0	0	10	0	0	10
Sign Control		Free			Free			Stop			Stop	
Grade		0%			0%			0%			0%	
Peak Hour Factor	1.00	1.00	1.00	1.00	1.00	1.00	1.00	1.00	1.00	1.00	1.00	1.00
Hourly flow rate (vph)	0	1640	10	0	2330	10	0	0	10	0	0	10
Pedestrians												
Lane Width (ft)												
Walking Speed (ft/s)												
Percent Blockage												
Right turn flare (veh)												
Median type		None			None							
Median storage veh)												
Upstream signal (ft)												
pX, platoon unblocked												
vC, conflicting volume	2340			1650			2820	3985	825	3165	3985	1170
vC1, stage 1 conf vol												
vC2, stage 2 conf vol												
vCu, unblocked vol	2340			1650			2820	3985	825	3165	3985	1170
tC, single (s)	4.1			4.1			7.5	6.5	6.9	7.5	6.5	6.9
tC, 2 stage (s)												
tF (s)	2.2			2.2			3.5	4.0	3.3	3.5	4.0	3.3
p0 queue free %	100			100			100	100	97	100	100	95
cM capacity (veh/h)	208			387			8	3	316	4	3	186

Direction, Lane #	EB 1	EB 2	WB 1	WB 2	NB 1	SB 1
Volume Total	1093	557	1553	787	10	10
Volume Left	0	0	0	0	0	0
Volume Right	0	10	0	10	10	10
cSH	1700	1700	1700	1700	316	186
Volume to Capacity	0.64	0.33	0.91	0.46	0.03	0.05
Queue Length 95th (ft)	0	0	0	0	2	4
Control Delay (s)	0.0	0.0	0.0	0.0	16.8	25.5
Lane LOS					C	D
Approach Delay (s)	0.0		0.0		16.8	25.5
Approach LOS					C	D

Intersection Summary			
Average Delay	0.1		
Intersection Capacity Utilization	74.7%	ICU Level of Service	D
Analysis Period (min)	15		

Intersection	
Int Delay, s/veh	0.1

Movement	EBL	EBT	EBR	WBL	WBT	WBR	NBL	NBT	NBR	SBL	SBT	SBR
Traffic Vol, veh/h	0	1640	10	0	2330	10	0	0	10	0	0	10
Future Vol, veh/h	0	1640	10	0	2330	10	0	0	10	0	0	10
Conflicting Peds, #/hr	0	0	0	0	0	0	0	0	0	0	0	0
Sign Control	Free	Free	Free	Free	Free	Free	Stop	Stop	Stop	Stop	Stop	Stop
RT Channelized	-	-	None	-	-	None	-	-	None	-	-	None
Storage Length	-	-	-	-	-	-	-	-	0	-	-	0
Veh in Median Storage, #	-	0	-	-	0	-	-	0	-	-	0	-
Grade, %	-	0	-	-	0	-	-	0	-	-	0	-
Peak Hour Factor	100	100	100	100	100	100	100	100	100	100	100	100
Heavy Vehicles, %	2	2	2	2	2	2	2	2	2	2	2	2
Mvmt Flow	0	1640	10	0	2330	10	0	0	10	0	0	10

Major/Minor	Major1			Major2			Minor1			Minor2		
Conflicting Flow All	2340	0	0	1650	0	0	2810	3985	825	3155	3985	1170
Stage 1	-	-	-	-	-	-	1645	1645	-	2335	2335	-
Stage 2	-	-	-	-	-	-	1165	2340	-	820	1650	-
Critical Hdwy	4.14	-	-	4.14	-	-	7.54	6.54	6.94	7.54	6.54	6.94
Critical Hdwy Stg 1	-	-	-	-	-	-	6.54	5.54	-	6.54	5.54	-
Critical Hdwy Stg 2	-	-	-	-	-	-	6.54	5.54	-	6.54	5.54	-
Follow-up Hdwy	2.22	-	-	2.22	-	-	3.52	4.02	3.32	3.52	4.02	3.32
Pot Cap-1 Maneuver	208	-	-	387	-	-	8	3	316	4	3	186
Stage 1	-	-	-	-	-	-	104	156	-	37	69	-
Stage 2	-	-	-	-	-	-	206	69	-	335	155	-
Platoon blocked, %		-	-		-	-						
Mov Cap-1 Maneuver	208	-	-	387	-	-	8	3	316	4	3	186
Mov Cap-2 Maneuver	-	-	-	-	-	-	8	3	-	4	3	-
Stage 1	-	-	-	-	-	-	104	156	-	37	69	-
Stage 2	-	-	-	-	-	-	195	69	-	324	155	-

Approach	EB	WB	NB	SB
HCM Control Delay, s	0	0	16.8	25.5
HCM LOS			C	D

Minor Lane/Major Mvmt	NBLn1	EBL	EBT	EBR	WBL	WBT	WBR	SBLn1
Capacity (veh/h)	316	208	-	-	387	-	-	186
HCM Lane V/C Ratio	0.032	-	-	-	-	-	-	0.054
HCM Control Delay (s)	16.8	0	-	-	0	-	-	25.5
HCM Lane LOS	C	A	-	-	A	-	-	D
HCM 95th %tile Q(veh)	0.1	0	-	-	0	-	-	0.2

Movement	EBL	EBT	EBR	WBL	WBT	WBR	NBL	NBT	NBR	SBL	SBT	SBR
Lane Configurations												
Traffic Volume (veh/h)	0	1550	90	0	2310	10	0	0	150	0	0	20
Future Volume (Veh/h)	0	1550	90	0	2310	10	0	0	150	0	0	20
Sign Control		Free			Free			Stop			Stop	
Grade		0%			0%			0%			0%	
Peak Hour Factor	1.00	1.00	1.00	1.00	1.00	1.00	1.00	1.00	1.00	1.00	1.00	1.00
Hourly flow rate (vph)	0	1550	90	0	2310	10	0	0	150	0	0	20
Pedestrians												
Lane Width (ft)												
Walking Speed (ft/s)												
Percent Blockage												
Right turn flare (veh)												
Median type		None			None							
Median storage veh)												
Upstream signal (ft)												
pX, platoon unblocked												
vC, conflicting volume	2320			1640			2770	3915	820	3240	3955	1160
vC1, stage 1 conf vol												
vC2, stage 2 conf vol												
vCu, unblocked vol	2320			1640			2770	3915	820	3240	3955	1160
tC, single (s)	4.8			4.1			7.5	6.5	6.9	7.5	6.5	6.9
tC, 2 stage (s)												
tF (s)	2.5			2.2			3.5	4.0	3.3	3.5	4.0	3.3
p0 queue free %	100			100			100	100	53	100	100	89
cM capacity (veh/h)	134			391			8	3	318	2	3	189

Direction, Lane #	EB 1	EB 2	WB 1	WB 2	NB 1	SB 1
Volume Total	1033	607	1540	780	150	20
Volume Left	0	0	0	0	0	0
Volume Right	0	90	0	10	150	20
cSH	1700	1700	1700	1700	318	189
Volume to Capacity	0.61	0.36	0.91	0.46	0.47	0.11
Queue Length 95th (ft)	0	0	0	0	60	9
Control Delay (s)	0.0	0.0	0.0	0.0	26.0	26.3
Lane LOS					D	D
Approach Delay (s)	0.0		0.0		26.0	26.3
Approach LOS					D	D

Intersection Summary			
Average Delay	1.1		
Intersection Capacity Utilization	74.2%	ICU Level of Service	D
Analysis Period (min)	15		

Intersection	
Int Delay, s/veh	1.1

Movement	EBL	EBT	EBR	WBL	WBT	WBR	NBL	NBT	NBR	SBL	SBT	SBR
Traffic Vol, veh/h	0	1550	90	0	2310	10	0	0	150	0	0	20
Future Vol, veh/h	0	1550	90	0	2310	10	0	0	150	0	0	20
Conflicting Peds, #/hr	0	0	0	0	0	0	0	0	0	0	0	0
Sign Control	Free	Free	Free	Free	Free	Free	Stop	Stop	Stop	Stop	Stop	Stop
RT Channelized	-	-	None	-	-	None	-	-	None	-	-	None
Storage Length	-	-	-	-	-	-	-	-	0	-	-	0
Veh in Median Storage, #	-	0	-	-	0	-	-	0	-	-	0	-
Grade, %	-	0	-	-	0	-	-	0	-	-	0	-
Peak Hour Factor	100	100	100	100	100	100	100	100	100	100	100	100
Heavy Vehicles, %	33	33	2	2	41	41	2	2	2	2	2	2
Mvmt Flow	0	1550	90	0	2310	10	0	0	150	0	0	20

Major/Minor	Major1			Major2			Minor1			Minor2		
Conflicting Flow All	2320	0	0	1640	0	0	2750	3915	820	3090	3955	1160
Stage 1	-	-	-	-	-	-	1595	1595	-	2315	2315	-
Stage 2	-	-	-	-	-	-	1155	2320	-	775	1640	-
Critical Hdwy	4.76	-	-	4.14	-	-	7.54	6.54	6.94	7.54	6.54	6.94
Critical Hdwy Stg 1	-	-	-	-	-	-	6.54	5.54	-	6.54	5.54	-
Critical Hdwy Stg 2	-	-	-	-	-	-	6.54	5.54	-	6.54	5.54	-
Follow-up Hdwy	2.53	-	-	2.22	-	-	3.52	4.02	3.32	3.52	4.02	3.32
Pot Cap-1 Maneuver	134	-	-	391	-	-	9	3	318	5	3	189
Stage 1	-	-	-	-	-	-	111	165	-	39	71	-
Stage 2	-	-	-	-	-	-	209	71	-	357	157	-
Platoon blocked, %		-	-		-	-						
Mov Cap-1 Maneuver	134	-	-	391	-	-	8	3	318	3	3	189
Mov Cap-2 Maneuver	-	-	-	-	-	-	8	3	-	3	3	-
Stage 1	-	-	-	-	-	-	111	165	-	39	71	-
Stage 2	-	-	-	-	-	-	187	71	-	189	157	-

Approach	EB	WB	NB	SB
HCM Control Delay, s	0	0	26	26.3
HCM LOS			D	D

Minor Lane/Major Mvmt	NBLn1	EBL	EBT	EBR	WBL	WBT	WBR	SBLn1
Capacity (veh/h)	318	134	-	-	391	-	-	189
HCM Lane V/C Ratio	0.472	-	-	-	-	-	-	0.106
HCM Control Delay (s)	26	0	-	-	0	-	-	26.3
HCM Lane LOS	D	A	-	-	A	-	-	D
HCM 95th %tile Q(veh)	2.4	0	-	-	0	-	-	0.3

Movement	EBL	EBT	EBR	WBL	WBT	WBR	NBL	NBT	NBR	SBL	SBT	SBR
Lane Configurations												
Traffic Volume (veh/h)	0	1430	70	0	2070	30	0	0	10	0	0	20
Future Volume (Veh/h)	0	1430	70	0	2070	30	0	0	10	0	0	20
Sign Control		Free			Free			Stop			Stop	
Grade		0%			0%			0%			0%	
Peak Hour Factor	1.00	1.00	1.00	1.00	1.00	1.00	1.00	1.00	1.00	1.00	1.00	1.00
Hourly flow rate (vph)	0	1430	70	0	2070	30	0	0	10	0	0	20
Pedestrians												
Lane Width (ft)												
Walking Speed (ft/s)												
Percent Blockage												
Right turn flare (veh)												
Median type		None			None							
Median storage veh)												
Upstream signal (ft)												
pX, platoon unblocked												
vC, conflicting volume	2100			1500			2520	3565	750	2810	3585	1050
vC1, stage 1 conf vol												
vC2, stage 2 conf vol												
vCu, unblocked vol	2100			1500			2520	3565	750	2810	3585	1050
tC, single (s)	4.7			4.9			7.5	6.5	6.9	7.5	6.5	6.9
tC, 2 stage (s)												
tF (s)	2.5			2.6			3.5	4.0	3.3	3.5	4.0	3.3
p0 queue free %	100			100			100	100	97	100	100	91
cM capacity (veh/h)	174			297			13	6	354	8	5	224

Direction, Lane #	EB 1	EB 2	WB 1	WB 2	NB 1	SB 1
Volume Total	953	547	1380	720	10	20
Volume Left	0	0	0	0	0	0
Volume Right	0	70	0	30	10	20
cSH	1700	1700	1700	1700	354	224
Volume to Capacity	0.56	0.32	0.81	0.42	0.03	0.09
Queue Length 95th (ft)	0	0	0	0	2	7
Control Delay (s)	0.0	0.0	0.0	0.0	15.5	22.7
Lane LOS					C	C
Approach Delay (s)	0.0		0.0		15.5	22.7
Approach LOS					C	C

Intersection Summary			
Average Delay	0.2		
Intersection Capacity Utilization	68.2%	ICU Level of Service	C
Analysis Period (min)	15		

Intersection	
Int Delay, s/veh	0.2

Movement	EBL	EBT	EBR	WBL	WBT	WBR	NBL	NBT	NBR	SBL	SBT	SBR
Traffic Vol, veh/h	0	1430	70	0	2070	30	0	0	10	0	0	20
Future Vol, veh/h	0	1430	70	0	2070	30	0	0	10	0	0	20
Conflicting Peds, #/hr	0	0	0	0	0	0	0	0	0	0	0	0
Sign Control	Free	Free	Free	Free	Free	Free	Stop	Stop	Stop	Stop	Stop	Stop
RT Channelized	-	-	None	-	-	None	-	-	None	-	-	None
Storage Length	-	-	-	-	-	-	-	-	0	-	-	0
Veh in Median Storage, #	-	0	-	-	0	-	-	0	-	-	0	-
Grade, %	-	0	-	-	0	-	-	0	-	-	0	-
Peak Hour Factor	100	100	100	100	100	100	100	100	100	100	100	100
Heavy Vehicles, %	31	31	31	39	39	39	2	2	2	2	2	2
Mvmt Flow	0	1430	70	0	2070	30	0	0	10	0	0	20

Major/Minor	Major1			Major2			Minor1			Minor2		
Conflicting Flow All	2100	0	0	1500	0	0	2500	3565	750	2800	3585	1050
Stage 1	-	-	-	-	-	-	1465	1465	-	2085	2085	-
Stage 2	-	-	-	-	-	-	1035	2100	-	715	1500	-
Critical Hdwy	4.72	-	-	4.88	-	-	7.54	6.54	6.94	7.54	6.54	6.94
Critical Hdwy Stg 1	-	-	-	-	-	-	6.54	5.54	-	6.54	5.54	-
Critical Hdwy Stg 2	-	-	-	-	-	-	6.54	5.54	-	6.54	5.54	-
Follow-up Hdwy	2.51	-	-	2.59	-	-	3.52	4.02	3.32	3.52	4.02	3.32
Pot Cap-1 Maneuver	174	-	-	297	-	-	15	6	354	8	5	224
Stage 1	-	-	-	-	-	-	134	191	-	54	93	-
Stage 2	-	-	-	-	-	-	248	92	-	388	184	-
Platoon blocked, %		-	-		-	-						
Mov Cap-1 Maneuver	174	-	-	297	-	-	14	6	354	8	5	224
Mov Cap-2 Maneuver	-	-	-	-	-	-	14	6	-	8	5	-
Stage 1	-	-	-	-	-	-	134	191	-	54	93	-
Stage 2	-	-	-	-	-	-	226	92	-	377	184	-

Approach	EB	WB	NB	SB
HCM Control Delay, s	0	0	15.5	22.6
HCM LOS			C	C

Minor Lane/Major Mvmt	NBLn1	EBL	EBT	EBR	WBL	WBT	WBR	SBLn1
Capacity (veh/h)	354	174	-	-	297	-	-	224
HCM Lane V/C Ratio	0.028	-	-	-	-	-	-	0.089
HCM Control Delay (s)	15.5	0	-	-	0	-	-	22.6
HCM Lane LOS	C	A	-	-	A	-	-	C
HCM 95th %tile Q(veh)	0.1	0	-	-	0	-	-	0.3

Movement	EBL	EBT	EBR	WBL	WBT	WBR	NBL	NBT	NBR	SBL	SBT	SBR
Lane Configurations												
Traffic Volume (veh/h)	0	1400	10	0	2000	10	0	0	10	0	0	10
Future Volume (Veh/h)	0	1400	10	0	2000	10	0	0	10	0	0	10
Sign Control		Free			Free			Stop			Stop	
Grade		0%			0%			0%			0%	
Peak Hour Factor	1.00	1.00	1.00	1.00	1.00	1.00	1.00	1.00	1.00	1.00	1.00	1.00
Hourly flow rate (vph)	0	1400	10	0	2000	10	0	0	10	0	0	10
Pedestrians												
Lane Width (ft)												
Walking Speed (ft/s)												
Percent Blockage												
Right turn flare (veh)												
Median type		None			None							
Median storage veh)												
Upstream signal (ft)												
pX, platoon unblocked												
vC, conflicting volume	2010			1410			2415	3415	705	2715	3415	1005
vC1, stage 1 conf vol												
vC2, stage 2 conf vol												
vCu, unblocked vol	2010			1410			2415	3415	705	2715	3415	1005
tC, single (s)	4.1			4.1			7.5	6.5	6.9	7.5	6.5	6.9
tC, 2 stage (s)												
tF (s)	2.2			2.2			3.5	4.0	3.3	3.5	4.0	3.3
p0 queue free %	100			100			100	100	97	100	100	96
cM capacity (veh/h)	280			480			16	7	379	10	7	240

Direction, Lane #	EB 1	EB 2	WB 1	WB 2	NB 1	SB 1
Volume Total	933	477	1333	677	10	10
Volume Left	0	0	0	0	0	0
Volume Right	0	10	0	10	10	10
cSH	1700	1700	1700	1700	379	240
Volume to Capacity	0.55	0.28	0.78	0.40	0.03	0.04
Queue Length 95th (ft)	0	0	0	0	2	3
Control Delay (s)	0.0	0.0	0.0	0.0	14.8	20.7
Lane LOS					B	C
Approach Delay (s)	0.0		0.0		14.8	20.7
Approach LOS					B	C

Intersection Summary			
Average Delay	0.1		
Intersection Capacity Utilization	65.6%	ICU Level of Service	C
Analysis Period (min)	15		

Intersection	
Int Delay, s/veh	0.1

Movement	EBL	EBT	EBR	WBL	WBT	WBR	NBL	NBT	NBR	SBL	SBT	SBR
Traffic Vol, veh/h	0	1400	10	0	2000	10	0	0	10	0	0	10
Future Vol, veh/h	0	1400	10	0	2000	10	0	0	10	0	0	10
Conflicting Peds, #/hr	0	0	0	0	0	0	0	0	0	0	0	0
Sign Control	Free	Free	Free	Free	Free	Free	Stop	Stop	Stop	Stop	Stop	Stop
RT Channelized	-	-	None	-	-	None	-	-	None	-	-	None
Storage Length	-	-	-	-	-	-	-	-	0	-	-	0
Veh in Median Storage, #	-	0	-	-	0	-	-	0	-	-	0	-
Grade, %	-	0	-	-	0	-	-	0	-	-	0	-
Peak Hour Factor	100	100	100	100	100	100	100	100	100	100	100	100
Heavy Vehicles, %	2	2	2	2	2	2	2	2	2	2	2	2
Mvmt Flow	0	1400	10	0	2000	10	0	0	10	0	0	10

Major/Minor	Major1			Major2			Minor1			Minor2		
Conflicting Flow All	2010	0	0	1410	0	0	2405	3415	705	2705	3415	1005
Stage 1	-	-	-	-	-	-	1405	1405	-	2005	2005	-
Stage 2	-	-	-	-	-	-	1000	2010	-	700	1410	-
Critical Hdwy	4.14	-	-	4.14	-	-	7.54	6.54	6.94	7.54	6.54	6.94
Critical Hdwy Stg 1	-	-	-	-	-	-	6.54	5.54	-	6.54	5.54	-
Critical Hdwy Stg 2	-	-	-	-	-	-	6.54	5.54	-	6.54	5.54	-
Follow-up Hdwy	2.22	-	-	2.22	-	-	3.52	4.02	3.32	3.52	4.02	3.32
Pot Cap-1 Maneuver	280	-	-	480	-	-	17	7	379	10	7	240
Stage 1	-	-	-	-	-	-	147	204	-	61	103	-
Stage 2	-	-	-	-	-	-	261	102	-	396	203	-
Platoon blocked, %		-	-		-	-						
Mov Cap-1 Maneuver	280	-	-	480	-	-	16	7	379	10	7	240
Mov Cap-2 Maneuver	-	-	-	-	-	-	16	7	-	10	7	-
Stage 1	-	-	-	-	-	-	147	204	-	61	103	-
Stage 2	-	-	-	-	-	-	250	102	-	386	203	-

Approach	EB	WB	NB	SB
HCM Control Delay, s	0	0	14.8	20.7
HCM LOS			B	C

Minor Lane/Major Mvmt	NBLn1	EBL	EBT	EBR	WBL	WBT	WBR	SBLn1
Capacity (veh/h)	379	280	-	-	480	-	-	240
HCM Lane V/C Ratio	0.026	-	-	-	-	-	-	0.042
HCM Control Delay (s)	14.8	0	-	-	0	-	-	20.7
HCM Lane LOS	B	A	-	-	A	-	-	C
HCM 95th %tile Q(veh)	0.1	0	-	-	0	-	-	0.1

Movement	EBL	EBT	EBR	WBL	WBT	WBR	NBL	NBT	NBR	SBL	SBT	SBR
Lane Configurations												
Traffic Volume (veh/h)	0	1400	0	0	1980	30	0	0	0	0	0	20
Future Volume (Veh/h)	0	1400	0	0	1980	30	0	0	0	0	0	20
Sign Control		Free			Free			Stop			Stop	
Grade		0%			0%			0%			0%	
Peak Hour Factor	1.00	1.00	1.00	1.00	1.00	1.00	1.00	1.00	1.00	1.00	1.00	1.00
Hourly flow rate (vph)	0	1400	0	0	1980	30	0	0	0	0	0	20
Pedestrians												
Lane Width (ft)												
Walking Speed (ft/s)												
Percent Blockage												
Right turn flare (veh)												
Median type		None			None							
Median storage veh)												
Upstream signal (ft)												
pX, platoon unblocked												
vC, conflicting volume	2010			1400			2410	3410	700	2695	3395	1005
vC1, stage 1 conf vol												
vC2, stage 2 conf vol												
vCu, unblocked vol	2010			1400			2410	3410	700	2695	3395	1005
tC, single (s)	4.1			4.1			7.5	6.5	6.9	7.5	6.5	6.9
tC, 2 stage (s)												
tF (s)	2.2			2.2			3.5	4.0	3.3	3.5	4.0	3.3
p0 queue free %	100			100			100	100	100	100	100	92
cM capacity (veh/h)	280			484			16	7	382	10	7	240

Direction, Lane #	EB 1	EB 2	WB 1	WB 2	NB 1	SB 1
Volume Total	933	467	1320	690	0	20
Volume Left	0	0	0	0	0	0
Volume Right	0	0	0	30	0	20
cSH	1700	1700	1700	1700	1700	240
Volume to Capacity	0.55	0.27	0.78	0.41	0.00	0.08
Queue Length 95th (ft)	0	0	0	0	0	7
Control Delay (s)	0.0	0.0	0.0	0.0	0.0	21.4
Lane LOS					A	C
Approach Delay (s)	0.0		0.0		0.0	21.4
Approach LOS					A	C

Intersection Summary			
Average Delay	0.1		
Intersection Capacity Utilization	65.7%	ICU Level of Service	C
Analysis Period (min)	15		

Intersection	
Int Delay, s/veh	0.1

Movement	EBL	EBT	EBR	WBL	WBT	WBR	NBL	NBT	NBR	SBL	SBT	SBR
Traffic Vol, veh/h	0	1400	0	0	1980	30	0	0	0	0	0	20
Future Vol, veh/h	0	1400	0	0	1980	30	0	0	0	0	0	20
Conflicting Peds, #/hr	0	0	0	0	0	0	0	0	0	0	0	0
Sign Control	Free	Free	Free	Free	Free	Free	Stop	Stop	Stop	Stop	Stop	Stop
RT Channelized	-	-	None	-	-	None	-	-	None	-	-	None
Storage Length	-	-	-	-	-	-	-	-	0	-	-	0
Veh in Median Storage, #	-	0	-	-	0	-	-	0	-	-	0	-
Grade, %	-	0	-	-	0	-	-	0	-	-	0	-
Peak Hour Factor	100	100	100	100	100	100	100	100	100	100	100	100
Heavy Vehicles, %	2	2	2	2	2	2	2	2	2	2	2	2
Mvmt Flow	0	1400	0	0	1980	30	0	0	0	0	0	20

Major/Minor	Major1			Major2			Minor1			Minor2		
Conflicting Flow All	2010	0	0	1400	0	0	2390	3410	700	2695	3395	1005
Stage 1	-	-	-	-	-	-	1400	1400	-	1995	1995	-
Stage 2	-	-	-	-	-	-	990	2010	-	700	1400	-
Critical Hdwy	4.14	-	-	4.14	-	-	7.54	6.54	6.94	7.54	6.54	6.94
Critical Hdwy Stg 1	-	-	-	-	-	-	6.54	5.54	-	6.54	5.54	-
Critical Hdwy Stg 2	-	-	-	-	-	-	6.54	5.54	-	6.54	5.54	-
Follow-up Hdwy	2.22	-	-	2.22	-	-	3.52	4.02	3.32	3.52	4.02	3.32
Pot Cap-1 Maneuver	280	-	-	484	-	-	18	7	382	10	7	240
Stage 1	-	-	-	-	-	-	148	205	-	62	104	-
Stage 2	-	-	-	-	-	-	264	102	-	396	205	-
Platoon blocked, %		-	-		-	-						
Mov Cap-1 Maneuver	280	-	-	484	-	-	17	7	382	10	7	240
Mov Cap-2 Maneuver	-	-	-	-	-	-	17	7	-	10	7	-
Stage 1	-	-	-	-	-	-	148	205	-	62	104	-
Stage 2	-	-	-	-	-	-	242	102	-	396	205	-

Approach	EB	WB	NB	SB
HCM Control Delay, s	0	0	0	21.4
HCM LOS			A	C

Minor Lane/Major Mvmt	NBLn1	EBL	EBT	EBR	WBL	WBT	WBR	SBLn1
Capacity (veh/h)	-	280	-	-	484	-	-	240
HCM Lane V/C Ratio	-	-	-	-	-	-	-	0.083
HCM Control Delay (s)	0	0	-	-	0	-	-	21.4
HCM Lane LOS	A	A	-	-	A	-	-	C
HCM 95th %tile Q(veh)	-	0	-	-	0	-	-	0.3

Movement	EBL	EBT	EBR	WBL	WBT	WBR	NBL	NBT	NBR	SBL	SBT	SBR
Lane Configurations												
Traffic Volume (veh/h)	0	1400	10	0	2010	10	0	0	10	0	0	10
Future Volume (Veh/h)	0	1400	10	0	2010	10	0	0	10	0	0	10
Sign Control		Free			Free			Stop			Stop	
Grade		0%			0%			0%			0%	
Peak Hour Factor	1.00	1.00	1.00	1.00	1.00	1.00	1.00	1.00	1.00	1.00	1.00	1.00
Hourly flow rate (vph)	0	1400	10	0	2010	10	0	0	10	0	0	10
Pedestrians												
Lane Width (ft)												
Walking Speed (ft/s)												
Percent Blockage												
Right turn flare (veh)												
Median type		None			None							
Median storage veh)												
Upstream signal (ft)												
pX, platoon unblocked												
vC, conflicting volume	2020			1410			2420	3425	705	2725	3425	1010
vC1, stage 1 conf vol												
vC2, stage 2 conf vol												
vCu, unblocked vol	2020			1410			2420	3425	705	2725	3425	1010
tC, single (s)	4.1			4.1			7.5	6.5	6.9	7.5	6.5	6.9
tC, 2 stage (s)												
tF (s)	2.2			2.2			3.5	4.0	3.3	3.5	4.0	3.3
p0 queue free %	100			100			100	100	97	100	100	96
cM capacity (veh/h)	278			480			16	7	379	9	7	238

Direction, Lane #	EB 1	EB 2	WB 1	WB 2	NB 1	SB 1
Volume Total	933	477	1340	680	10	10
Volume Left	0	0	0	0	0	0
Volume Right	0	10	0	10	10	10
cSH	1700	1700	1700	1700	379	238
Volume to Capacity	0.55	0.28	0.79	0.40	0.03	0.04
Queue Length 95th (ft)	0	0	0	0	2	3
Control Delay (s)	0.0	0.0	0.0	0.0	14.8	20.8
Lane LOS					B	C
Approach Delay (s)	0.0		0.0		14.8	20.8
Approach LOS					B	C

Intersection Summary			
Average Delay	0.1		
Intersection Capacity Utilization	65.9%	ICU Level of Service	C
Analysis Period (min)	15		

Intersection	
Int Delay, s/veh	0.1

Movement	EBL	EBT	EBR	WBL	WBT	WBR	NBL	NBT	NBR	SBL	SBT	SBR
Traffic Vol, veh/h	0	1400	10	0	2010	10	0	0	10	0	0	10
Future Vol, veh/h	0	1400	10	0	2010	10	0	0	10	0	0	10
Conflicting Peds, #/hr	0	0	0	0	0	0	0	0	0	0	0	0
Sign Control	Free	Free	Free	Free	Free	Free	Stop	Stop	Stop	Stop	Stop	Stop
RT Channelized	-	-	None	-	-	None	-	-	None	-	-	None
Storage Length	-	-	-	-	-	-	-	-	0	-	-	0
Veh in Median Storage, #	-	0	-	-	0	-	-	0	-	-	0	-
Grade, %	-	0	-	-	0	-	-	0	-	-	0	-
Peak Hour Factor	100	100	100	100	100	100	100	100	100	100	100	100
Heavy Vehicles, %	2	2	2	2	2	2	2	2	2	2	2	2
Mvmt Flow	0	1400	10	0	2010	10	0	0	10	0	0	10

Major/Minor	Major1			Major2			Minor1			Minor2		
Conflicting Flow All	2020	0	0	1410	0	0	2410	3425	705	2715	3425	1010
Stage 1	-	-	-	-	-	-	1405	1405	-	2015	2015	-
Stage 2	-	-	-	-	-	-	1005	2020	-	700	1410	-
Critical Hdwy	4.14	-	-	4.14	-	-	7.54	6.54	6.94	7.54	6.54	6.94
Critical Hdwy Stg 1	-	-	-	-	-	-	6.54	5.54	-	6.54	5.54	-
Critical Hdwy Stg 2	-	-	-	-	-	-	6.54	5.54	-	6.54	5.54	-
Follow-up Hdwy	2.22	-	-	2.22	-	-	3.52	4.02	3.32	3.52	4.02	3.32
Pot Cap-1 Maneuver	278	-	-	480	-	-	17	7	379	10	7	238
Stage 1	-	-	-	-	-	-	147	204	-	60	101	-
Stage 2	-	-	-	-	-	-	259	101	-	396	203	-
Platoon blocked, %		-	-		-	-						
Mov Cap-1 Maneuver	278	-	-	480	-	-	16	7	379	10	7	238
Mov Cap-2 Maneuver	-	-	-	-	-	-	16	7	-	10	7	-
Stage 1	-	-	-	-	-	-	147	204	-	60	101	-
Stage 2	-	-	-	-	-	-	248	101	-	386	203	-

Approach	EB	WB	NB	SB
HCM Control Delay, s	0	0	14.8	20.8
HCM LOS			B	C

Minor Lane/Major Mvmt	NBLn1	EBL	EBT	EBR	WBL	WBT	WBR	SBLn1
Capacity (veh/h)	379	278	-	-	480	-	-	238
HCM Lane V/C Ratio	0.026	-	-	-	-	-	-	0.042
HCM Control Delay (s)	14.8	0	-	-	0	-	-	20.8
HCM Lane LOS	B	A	-	-	A	-	-	C
HCM 95th %tile Q(veh)	0.1	0	-	-	0	-	-	0.1

Movement	EBL	EBT	EBR	WBL	WBT	WBR	NBL	NBT	NBR	SBL	SBT	SBR
Lane Configurations												
Traffic Volume (veh/h)	0	1400	10	0	2000	60	0	0	20	0	0	10
Future Volume (Veh/h)	0	1400	10	0	2000	60	0	0	20	0	0	10
Sign Control		Free			Free			Stop			Stop	
Grade		0%			0%			0%			0%	
Peak Hour Factor	1.00	1.00	1.00	1.00	1.00	1.00	1.00	1.00	1.00	1.00	1.00	1.00
Hourly flow rate (vph)	0	1400	10	0	2000	60	0	0	20	0	0	10
Pedestrians												
Lane Width (ft)												
Walking Speed (ft/s)												
Percent Blockage												
Right turn flare (veh)												
Median type		None			None							
Median storage veh)												
Upstream signal (ft)												
pX, platoon unblocked												
vC, conflicting volume	2060			1410			2415	3465	705	2750	3440	1030
vC1, stage 1 conf vol												
vC2, stage 2 conf vol												
vCu, unblocked vol	2060			1410			2415	3465	705	2750	3440	1030
tC, single (s)	4.7			4.8			7.5	6.5	6.9	7.5	6.5	6.9
tC, 2 stage (s)												
tF (s)	2.5			2.6			3.5	4.0	3.3	3.5	4.0	3.3
p0 queue free %	100			100			100	100	95	100	100	96
cM capacity (veh/h)	186			337			16	7	379	9	7	231

Direction, Lane #	EB 1	EB 2	WB 1	WB 2	NB 1	SB 1
Volume Total	933	477	1333	727	20	10
Volume Left	0	0	0	0	0	0
Volume Right	0	10	0	60	20	10
cSH	1700	1700	1700	1700	379	231
Volume to Capacity	0.55	0.28	0.78	0.43	0.05	0.04
Queue Length 95th (ft)	0	0	0	0	4	3
Control Delay (s)	0.0	0.0	0.0	0.0	15.0	21.3
Lane LOS					C	C
Approach Delay (s)	0.0		0.0		15.0	21.3
Approach LOS					C	C

Intersection Summary			
Average Delay	0.1		
Intersection Capacity Utilization	67.2%	ICU Level of Service	C
Analysis Period (min)	15		

Intersection	
Int Delay, s/veh	0.1

Movement	EBL	EBT	EBR	WBL	WBT	WBR	NBL	NBT	NBR	SBL	SBT	SBR
Traffic Vol, veh/h	0	1400	10	0	2000	60	0	0	20	0	0	10
Future Vol, veh/h	0	1400	10	0	2000	60	0	0	20	0	0	10
Conflicting Peds, #/hr	0	0	0	0	0	0	0	0	0	0	0	0
Sign Control	Free	Free	Free	Free	Free	Free	Stop	Stop	Stop	Stop	Stop	Stop
RT Channelized	-	-	None	-	-	None	-	-	None	-	-	None
Storage Length	-	-	-	-	-	-	-	-	0	-	-	0
Veh in Median Storage, #	-	0	-	-	0	-	-	0	-	-	0	-
Grade, %	-	0	-	-	0	-	-	0	-	-	0	-
Peak Hour Factor	100	100	100	100	100	100	100	100	100	100	100	100
Heavy Vehicles, %	29	29	29	36	36	36	2	2	2	2	2	2
Mvmt Flow	0	1400	10	0	2000	60	0	0	20	0	0	10

Major/Minor	Major1			Major2			Minor1			Minor2		
Conflicting Flow All	2060	0	0	1410	0	0	2405	3465	705	2730	3440	1030
Stage 1	-	-	-	-	-	-	1405	1405	-	2030	2030	-
Stage 2	-	-	-	-	-	-	1000	2060	-	700	1410	-
Critical Hdwy	4.68	-	-	4.82	-	-	7.54	6.54	6.94	7.54	6.54	6.94
Critical Hdwy Stg 1	-	-	-	-	-	-	6.54	5.54	-	6.54	5.54	-
Critical Hdwy Stg 2	-	-	-	-	-	-	6.54	5.54	-	6.54	5.54	-
Follow-up Hdwy	2.49	-	-	2.56	-	-	3.52	4.02	3.32	3.52	4.02	3.32
Pot Cap-1 Maneuver	186	-	-	337	-	-	17	7	379	10	7	231
Stage 1	-	-	-	-	-	-	147	204	-	59	100	-
Stage 2	-	-	-	-	-	-	261	96	-	396	203	-
Platoon blocked, %		-	-		-	-						
Mov Cap-1 Maneuver	186	-	-	337	-	-	16	7	379	9	7	231
Mov Cap-2 Maneuver	-	-	-	-	-	-	16	7	-	9	7	-
Stage 1	-	-	-	-	-	-	147	204	-	59	100	-
Stage 2	-	-	-	-	-	-	250	96	-	375	203	-

Approach	EB	WB	NB	SB
HCM Control Delay, s	0	0	15	21.3
HCM LOS			C	C

Minor Lane/Major Mvmt	NBLn1	EBL	EBT	EBR	WBL	WBT	WBR	SBLn1
Capacity (veh/h)	379	186	-	-	337	-	-	231
HCM Lane V/C Ratio	0.053	-	-	-	-	-	-	0.043
HCM Control Delay (s)	15	0	-	-	0	-	-	21.3
HCM Lane LOS	C	A	-	-	A	-	-	C
HCM 95th %tile Q(veh)	0.2	0	-	-	0	-	-	0.1

Movement	EBL	EBT	EBR	WBL	WBT	WBR	NBL	NBT	NBR	SBL	SBT	SBR
Lane Configurations												
Traffic Volume (veh/h)	0	1230	140	0	1870	70	0	0	10	0	0	40
Future Volume (Veh/h)	0	1230	140	0	1870	70	0	0	10	0	0	40
Sign Control		Free			Free			Stop			Stop	
Grade		0%			0%			0%			0%	
Peak Hour Factor	1.00	1.00	1.00	1.00	1.00	1.00	1.00	1.00	1.00	1.00	1.00	1.00
Hourly flow rate (vph)	0	1230	140	0	1870	70	0	0	10	0	0	40
Pedestrians												
Lane Width (ft)												
Walking Speed (ft/s)												
Percent Blockage												
Right turn flare (veh)												
Median type		None			None							
Median storage veh)												
Upstream signal (ft)												
pX, platoon unblocked												
vC, conflicting volume	1940			1370			2275	3240	685	2530	3275	970
vC1, stage 1 conf vol												
vC2, stage 2 conf vol												
vCu, unblocked vol	1940			1370			2275	3240	685	2530	3275	970
tC, single (s)	4.6			4.8			7.5	6.5	6.9	7.5	6.5	6.9
tC, 2 stage (s)												
tF (s)	2.5			2.6			3.5	4.0	3.3	3.5	4.0	3.3
p0 queue free %	100			100			100	100	97	100	100	84
cM capacity (veh/h)	219			352			18	9	391	13	9	253

Direction, Lane #	EB 1	EB 2	WB 1	WB 2	NB 1	SB 1
Volume Total	820	550	1247	693	10	40
Volume Left	0	0	0	0	0	0
Volume Right	0	140	0	70	10	40
cSH	1700	1700	1700	1700	391	253
Volume to Capacity	0.48	0.32	0.73	0.41	0.03	0.16
Queue Length 95th (ft)	0	0	0	0	2	14
Control Delay (s)	0.0	0.0	0.0	0.0	14.5	21.9
Lane LOS					B	C
Approach Delay (s)	0.0		0.0		14.5	21.9
Approach LOS					B	C

Intersection Summary			
Average Delay	0.3		
Intersection Capacity Utilization	63.9%	ICU Level of Service	B
Analysis Period (min)	15		

Intersection	
Int Delay, s/veh	0.3

Movement	EBL	EBT	EBR	WBL	WBT	WBR	NBL	NBT	NBR	SBL	SBT	SBR
Traffic Vol, veh/h	0	1230	140	0	1870	70	0	0	10	0	0	40
Future Vol, veh/h	0	1230	140	0	1870	70	0	0	10	0	0	40
Conflicting Peds, #/hr	0	0	0	0	0	0	0	0	0	0	0	0
Sign Control	Free	Free	Free	Free	Free	Free	Stop	Stop	Stop	Stop	Stop	Stop
RT Channelized	-	-	None	-	-	None	-	-	None	-	-	None
Storage Length	-	-	-	-	-	-	-	-	0	-	-	0
Veh in Median Storage, #	-	0	-	-	0	-	-	0	-	-	0	-
Grade, %	-	0	-	-	0	-	-	0	-	-	0	-
Peak Hour Factor	100	100	100	100	100	100	100	100	100	100	100	100
Heavy Vehicles, %	26	26	26	36	36	36	2	2	2	2	2	2
Mvmt Flow	0	1230	140	0	1870	70	0	0	10	0	0	40

Major/Minor	Major1			Major2			Minor1			Minor2		
Conflicting Flow All	1940	0	0	1370	0	0	2235	3240	685	2520	3275	970
Stage 1	-	-	-	-	-	-	1300	1300	-	1905	1905	-
Stage 2	-	-	-	-	-	-	935	1940	-	615	1370	-
Critical Hdwy	4.62	-	-	4.82	-	-	7.54	6.54	6.94	7.54	6.54	6.94
Critical Hdwy Stg 1	-	-	-	-	-	-	6.54	5.54	-	6.54	5.54	-
Critical Hdwy Stg 2	-	-	-	-	-	-	6.54	5.54	-	6.54	5.54	-
Follow-up Hdwy	2.46	-	-	2.56	-	-	3.52	4.02	3.32	3.52	4.02	3.32
Pot Cap-1 Maneuver	219	-	-	352	-	-	23	9	391	14	9	253
Stage 1	-	-	-	-	-	-	170	230	-	71	115	-
Stage 2	-	-	-	-	-	-	285	111	-	445	212	-
Platoon blocked, %		-	-		-	-						
Mov Cap-1 Maneuver	219	-	-	352	-	-	19	9	391	14	9	253
Mov Cap-2 Maneuver	-	-	-	-	-	-	19	9	-	14	9	-
Stage 1	-	-	-	-	-	-	170	230	-	71	115	-
Stage 2	-	-	-	-	-	-	240	111	-	434	212	-

Approach	EB	WB	NB	SB
HCM Control Delay, s	0	0	14.4	21.9
HCM LOS			B	C

Minor Lane/Major Mvmt	NBLn1	EBL	EBT	EBR	WBL	WBT	WBR	SBLn1
Capacity (veh/h)	391	219	-	-	352	-	-	253
HCM Lane V/C Ratio	0.026	-	-	-	-	-	-	0.158
HCM Control Delay (s)	14.4	0	-	-	0	-	-	21.9
HCM Lane LOS	B	A	-	-	A	-	-	C
HCM 95th %tile Q(veh)	0.1	0	-	-	0	-	-	0.6

Movement	EBL	EBT	EBR	WBL	WBT	WBR	NBL	NBT	NBR	SBL	SBT	SBR
Lane Configurations												
Traffic Volume (veh/h)	0	1240	10	0	1940	20	0	0	10	0	0	10
Future Volume (Veh/h)	0	1240	10	0	1940	20	0	0	10	0	0	10
Sign Control		Free			Free			Stop			Stop	
Grade		0%			0%			0%			0%	
Peak Hour Factor	1.00	1.00	1.00	1.00	1.00	1.00	1.00	1.00	1.00	1.00	1.00	1.00
Hourly flow rate (vph)	0	1240	10	0	1940	20	0	0	10	0	0	10
Pedestrians												
Lane Width (ft)												
Walking Speed (ft/s)												
Percent Blockage												
Right turn flare (veh)												
Median type		None			None							
Median storage veh)												
Upstream signal (ft)												
pX, platoon unblocked												
vC, conflicting volume	1960			1250			2225	3205	625	2580	3200	980
vC1, stage 1 conf vol												
vC2, stage 2 conf vol												
vCu, unblocked vol	1960			1250			2225	3205	625	2580	3200	980
tC, single (s)	4.6			4.8			7.5	6.5	6.9	7.5	6.5	6.9
tC, 2 stage (s)												
tF (s)	2.5			2.6			3.5	4.0	3.3	3.5	4.0	3.3
p0 queue free %	100			100			100	100	98	100	100	96
cM capacity (veh/h)	215			398			23	10	428	12	10	249

Direction, Lane #	EB 1	EB 2	WB 1	WB 2	NB 1	SB 1
Volume Total	827	423	1293	667	10	10
Volume Left	0	0	0	0	0	0
Volume Right	0	10	0	20	10	10
cSH	1700	1700	1700	1700	428	249
Volume to Capacity	0.49	0.25	0.76	0.39	0.02	0.04
Queue Length 95th (ft)	0	0	0	0	2	3
Control Delay (s)	0.0	0.0	0.0	0.0	13.6	20.1
Lane LOS					B	C
Approach Delay (s)	0.0		0.0		13.6	20.1
Approach LOS					B	C

Intersection Summary			
Average Delay	0.1		
Intersection Capacity Utilization	64.3%	ICU Level of Service	C
Analysis Period (min)	15		

Intersection	
Int Delay, s/veh	0.1

Movement	EBL	EBT	EBR	WBL	WBT	WBR	NBL	NBT	NBR	SBL	SBT	SBR
Traffic Vol, veh/h	0	1240	10	0	1940	20	0	0	10	0	0	10
Future Vol, veh/h	0	1240	10	0	1940	20	0	0	10	0	0	10
Conflicting Peds, #/hr	0	0	0	0	0	0	0	0	0	0	0	0
Sign Control	Free	Free	Free	Free	Free	Free	Stop	Stop	Stop	Stop	Stop	Stop
RT Channelized	-	-	None	-	-	None	-	-	None	-	-	None
Storage Length	-	-	-	-	-	-	-	-	0	-	-	0
Veh in Median Storage, #	-	0	-	-	0	-	-	0	-	-	0	-
Grade, %	-	0	-	-	0	-	-	0	-	-	0	-
Peak Hour Factor	100	100	100	100	100	100	100	100	100	100	100	100
Heavy Vehicles, %	26	26	26	36	36	36	2	2	2	2	2	2
Mvmt Flow	0	1240	10	0	1940	20	0	0	10	0	0	10

Major/Minor	Major1			Major2			Minor1			Minor2		
Conflicting Flow All	1960	0	0	1250	0	0	2215	3205	625	2570	3200	980
Stage 1	-	-	-	-	-	-	1245	1245	-	1950	1950	-
Stage 2	-	-	-	-	-	-	970	1960	-	620	1250	-
Critical Hdwy	4.62	-	-	4.82	-	-	7.54	6.54	6.94	7.54	6.54	6.94
Critical Hdwy Stg 1	-	-	-	-	-	-	6.54	5.54	-	6.54	5.54	-
Critical Hdwy Stg 2	-	-	-	-	-	-	6.54	5.54	-	6.54	5.54	-
Follow-up Hdwy	2.46	-	-	2.56	-	-	3.52	4.02	3.32	3.52	4.02	3.32
Pot Cap-1 Maneuver	215	-	-	398	-	-	24	10	428	13	10	249
Stage 1	-	-	-	-	-	-	184	244	-	66	109	-
Stage 2	-	-	-	-	-	-	272	108	-	442	243	-
Platoon blocked, %		-	-		-	-						
Mov Cap-1 Maneuver	215	-	-	398	-	-	23	10	428	13	10	249
Mov Cap-2 Maneuver	-	-	-	-	-	-	23	10	-	13	10	-
Stage 1	-	-	-	-	-	-	184	244	-	66	109	-
Stage 2	-	-	-	-	-	-	261	108	-	432	243	-

Approach	EB	WB	NB	SB
HCM Control Delay, s	0	0	13.6	20.1
HCM LOS			B	C

Minor Lane/Major Mvmt	NBLn1	EBL	EBT	EBR	WBL	WBT	WBR	SBLn1
Capacity (veh/h)	428	215	-	-	398	-	-	249
HCM Lane V/C Ratio	0.023	-	-	-	-	-	-	0.04
HCM Control Delay (s)	13.6	0	-	-	0	-	-	20.1
HCM Lane LOS	B	A	-	-	A	-	-	C
HCM 95th %tile Q(veh)	0.1	0	-	-	0	-	-	0.1

Movement	EBL	EBT	EBR	WBL	WBT	WBR	NBL	NBT	NBR	SBL	SBT	SBR
Lane Configurations												
Traffic Volume (veh/h)	0	1220	10	0	1710	10	0	0	10	0	0	10
Future Volume (Veh/h)	0	1220	10	0	1710	10	0	0	10	0	0	10
Sign Control		Free			Free			Stop			Stop	
Grade		0%			0%			0%			0%	
Peak Hour Factor	1.00	1.00	1.00	1.00	1.00	1.00	1.00	1.00	1.00	1.00	1.00	1.00
Hourly flow rate (vph)	0	1220	10	0	1710	10	0	0	10	0	0	10
Pedestrians												
Lane Width (ft)												
Walking Speed (ft/s)												
Percent Blockage												
Right turn flare (veh)												
Median type		None			None							
Median storage veh)												
Upstream signal (ft)												
pX, platoon unblocked												
vC, conflicting volume	1720			1230			2090	2945	615	2335	2945	860
vC1, stage 1 conf vol												
vC2, stage 2 conf vol												
vCu, unblocked vol	1720			1230			2090	2945	615	2335	2945	860
tC, single (s)	4.1			4.1			7.5	6.5	6.9	7.5	6.5	6.9
tC, 2 stage (s)												
tF (s)	2.2			2.2			3.5	4.0	3.3	3.5	4.0	3.3
p0 queue free %	100			100			100	100	98	100	100	97
cM capacity (veh/h)	364			562			29	15	434	19	15	299

Direction, Lane #	EB 1	EB 2	WB 1	WB 2	NB 1	SB 1
Volume Total	813	417	1140	580	10	10
Volume Left	0	0	0	0	0	0
Volume Right	0	10	0	10	10	10
cSH	1700	1700	1700	1700	434	299
Volume to Capacity	0.48	0.25	0.67	0.34	0.02	0.03
Queue Length 95th (ft)	0	0	0	0	2	3
Control Delay (s)	0.0	0.0	0.0	0.0	13.5	17.4
Lane LOS					B	C
Approach Delay (s)	0.0		0.0		13.5	17.4
Approach LOS					B	C

Intersection Summary			
Average Delay	0.1		
Intersection Capacity Utilization	57.6%	ICU Level of Service	B
Analysis Period (min)	15		

Intersection	
Int Delay, s/veh	0.1

Movement	EBL	EBT	EBR	WBL	WBT	WBR	NBL	NBT	NBR	SBL	SBT	SBR
Traffic Vol, veh/h	0	1220	10	0	1710	10	0	0	10	0	0	10
Future Vol, veh/h	0	1220	10	0	1710	10	0	0	10	0	0	10
Conflicting Peds, #/hr	0	0	0	0	0	0	0	0	0	0	0	0
Sign Control	Free	Free	Free	Free	Free	Free	Stop	Stop	Stop	Stop	Stop	Stop
RT Channelized	-	-	None	-	-	None	-	-	None	-	-	None
Storage Length	-	-	-	-	-	-	-	-	0	-	-	0
Veh in Median Storage, #	-	0	-	-	0	-	-	0	-	-	0	-
Grade, %	-	0	-	-	0	-	-	0	-	-	0	-
Peak Hour Factor	100	100	100	100	100	100	100	100	100	100	100	100
Heavy Vehicles, %	2	2	2	2	2	2	2	2	2	2	2	2
Mvmt Flow	0	1220	10	0	1710	10	0	0	10	0	0	10

Major/Minor	Major1			Major2			Minor1			Minor2		
Conflicting Flow All	1720	0	0	1230	0	0	2080	2945	615	2325	2945	860
Stage 1	-	-	-	-	-	-	1225	1225	-	1715	1715	-
Stage 2	-	-	-	-	-	-	855	1720	-	610	1230	-
Critical Hdwy	4.14	-	-	4.14	-	-	7.54	6.54	6.94	7.54	6.54	6.94
Critical Hdwy Stg 1	-	-	-	-	-	-	6.54	5.54	-	6.54	5.54	-
Critical Hdwy Stg 2	-	-	-	-	-	-	6.54	5.54	-	6.54	5.54	-
Follow-up Hdwy	2.22	-	-	2.22	-	-	3.52	4.02	3.32	3.52	4.02	3.32
Pot Cap-1 Maneuver	364	-	-	562	-	-	31	15	434	20	15	299
Stage 1	-	-	-	-	-	-	190	249	-	94	144	-
Stage 2	-	-	-	-	-	-	319	143	-	448	248	-
Platoon blocked, %		-	-		-	-						
Mov Cap-1 Maneuver	364	-	-	562	-	-	30	15	434	20	15	299
Mov Cap-2 Maneuver	-	-	-	-	-	-	30	15	-	20	15	-
Stage 1	-	-	-	-	-	-	190	249	-	94	144	-
Stage 2	-	-	-	-	-	-	308	143	-	438	248	-

Approach	EB	WB	NB	SB
HCM Control Delay, s	0	0	13.5	17.5
HCM LOS			B	C

Minor Lane/Major Mvmt	NBLn1	EBL	EBT	EBR	WBL	WBT	WBR	SBLn1
Capacity (veh/h)	434	364	-	-	562	-	-	299
HCM Lane V/C Ratio	0.023	-	-	-	-	-	-	0.033
HCM Control Delay (s)	13.5	0	-	-	0	-	-	17.5
HCM Lane LOS	B	A	-	-	A	-	-	C
HCM 95th %tile Q(veh)	0.1	0	-	-	0	-	-	0.1

Movement	EBL	EBT	EBR	WBL	WBT	WBR	NBL	NBT	NBR	SBL	SBT	SBR
Lane Configurations												
Traffic Volume (veh/h)	0	1220	10	0	1710	10	0	0	10	0	0	20
Future Volume (Veh/h)	0	1220	10	0	1710	10	0	0	10	0	0	20
Sign Control		Free			Free			Stop			Stop	
Grade		0%			0%			0%			0%	
Peak Hour Factor	1.00	1.00	1.00	1.00	1.00	1.00	1.00	1.00	1.00	1.00	1.00	1.00
Hourly flow rate (vph)	0	1220	10	0	1710	10	0	0	10	0	0	20
Pedestrians												
Lane Width (ft)												
Walking Speed (ft/s)												
Percent Blockage												
Right turn flare (veh)												
Median type		None			None							
Median storage veh)												
Upstream signal (ft)												
pX, platoon unblocked												
vC, conflicting volume	1720			1230			2100	2945	615	2335	2945	860
vC1, stage 1 conf vol												
vC2, stage 2 conf vol												
vCu, unblocked vol	1720			1230			2100	2945	615	2335	2945	860
tC, single (s)	4.6			4.8			7.5	6.5	6.9	7.5	6.5	6.9
tC, 2 stage (s)												
tF (s)	2.5			2.6			3.5	4.0	3.3	3.5	4.0	3.3
p0 queue free %	100			100			100	100	98	100	100	93
cM capacity (veh/h)	274			406			28	15	434	19	15	299

Direction, Lane #	EB 1	EB 2	WB 1	WB 2	NB 1	SB 1
Volume Total	813	417	1140	580	10	20
Volume Left	0	0	0	0	0	0
Volume Right	0	10	0	10	10	20
cSH	1700	1700	1700	1700	434	299
Volume to Capacity	0.48	0.25	0.67	0.34	0.02	0.07
Queue Length 95th (ft)	0	0	0	0	2	5
Control Delay (s)	0.0	0.0	0.0	0.0	13.5	17.9
Lane LOS					B	C
Approach Delay (s)	0.0		0.0		13.5	17.9
Approach LOS					B	C

Intersection Summary			
Average Delay	0.2		
Intersection Capacity Utilization	57.6%	ICU Level of Service	B
Analysis Period (min)	15		

Intersection	
Int Delay, s/veh	0.2

Movement	EBL	EBT	EBR	WBL	WBT	WBR	NBL	NBT	NBR	SBL	SBT	SBR
Traffic Vol, veh/h	0	1220	10	0	1710	10	0	0	10	0	0	20
Future Vol, veh/h	0	1220	10	0	1710	10	0	0	10	0	0	20
Conflicting Peds, #/hr	0	0	0	0	0	0	0	0	0	0	0	0
Sign Control	Free	Free	Free	Free	Free	Free	Stop	Stop	Stop	Stop	Stop	Stop
RT Channelized	-	-	None	-	-	None	-	-	None	-	-	None
Storage Length	-	-	-	-	-	-	-	-	0	-	-	0
Veh in Median Storage, #	-	0	-	-	0	-	-	0	-	-	0	-
Grade, %	-	0	-	-	0	-	-	0	-	-	0	-
Peak Hour Factor	100	100	100	100	100	100	100	100	100	100	100	100
Heavy Vehicles, %	26	26	26	36	36	36	2	2	2	2	2	2
Mvmt Flow	0	1220	10	0	1710	10	0	0	10	0	0	20

Major/Minor	Major1			Major2			Minor1			Minor2		
Conflicting Flow All	1720	0	0	1230	0	0	2080	2945	615	2325	2945	860
Stage 1	-	-	-	-	-	-	1225	1225	-	1715	1715	-
Stage 2	-	-	-	-	-	-	855	1720	-	610	1230	-
Critical Hdwy	4.62	-	-	4.82	-	-	7.54	6.54	6.94	7.54	6.54	6.94
Critical Hdwy Stg 1	-	-	-	-	-	-	6.54	5.54	-	6.54	5.54	-
Critical Hdwy Stg 2	-	-	-	-	-	-	6.54	5.54	-	6.54	5.54	-
Follow-up Hdwy	2.46	-	-	2.56	-	-	3.52	4.02	3.32	3.52	4.02	3.32
Pot Cap-1 Maneuver	274	-	-	406	-	-	31	15	434	20	15	299
Stage 1	-	-	-	-	-	-	190	249	-	94	144	-
Stage 2	-	-	-	-	-	-	319	143	-	448	248	-
Platoon blocked, %		-	-		-	-						
Mov Cap-1 Maneuver	274	-	-	406	-	-	29	15	434	20	15	299
Mov Cap-2 Maneuver	-	-	-	-	-	-	29	15	-	20	15	-
Stage 1	-	-	-	-	-	-	190	249	-	94	144	-
Stage 2	-	-	-	-	-	-	298	143	-	438	248	-

Approach	EB	WB	NB	SB
HCM Control Delay, s	0	0	13.5	17.9
HCM LOS			B	C

Minor Lane/Major Mvmt	NBLn1	EBL	EBT	EBR	WBL	WBT	WBR	SBLn1
Capacity (veh/h)	434	274	-	-	406	-	-	299
HCM Lane V/C Ratio	0.023	-	-	-	-	-	-	0.067
HCM Control Delay (s)	13.5	0	-	-	0	-	-	17.9
HCM Lane LOS	B	A	-	-	A	-	-	C
HCM 95th %tile Q(veh)	0.1	0	-	-	0	-	-	0.2

Movement	EBL	EBT	EBR	WBL	WBT	WBR	NBL	NBT	NBR	SBL	SBT	SBR
Right Turn Channelized			MOYes									MOYes
Traffic Volume (veh/h)	0	420	0	20	1260	0	0	0	0	30	0	0
Future Volume (veh/h)	0	420	0	20	1260	0	0	0	0	30	0	0
Peak Hour Factor	1.00	1.00	1.00	1.00	1.00	1.00	1.00	1.00	1.00	1.00	1.00	1.00
Hourly flow rate (vph)	0	420	0	20	1260	0	0	0	0	30	0	0
Approach Volume (veh/h)		420			1280			0			30	
Crossing Volume (veh/h)		50			0			450			1280#	
High Capacity (veh/h)		1332			1385			971			494	
High v/c (veh/h)		0.32			0.92			0.00			0.06	
Low Capacity (veh/h)		1113			1161			788			373	
Low v/c (veh/h)		0.38			1.10			0.00			0.08	

Intersection Summary			
Maximum v/c High	0.92		
Maximum v/c Low	1.10		
Intersection Capacity Utilization	92.3%	ICU Level of Service	F

Crossing flow exceeds 1200, method is not applicable

Intersection	
Intersection Delay, s/veh	229.4
Intersection LOS	F

Approach	EB	WB	NB	SB
Entry Lanes	1	1	0	1
Conflicting Circle Lanes	1	1	1	1
Adj Approach Flow, veh/h	420	1280	0	30
Demand Flow Rate, veh/h	580	1843	0	41
Vehicles Circulating, veh/h	70	0	621	1843
Vehicles Exiting, veh/h	1814	621	29	0
Follow-Up Headway, s	3.186	3.186	3.186	3.186
Ped Vol Crossing Leg, #/h	0	0	0	0
Ped Cap Adj	1.000	1.000	1.000	1.000
Approach Delay, s/veh	13.1	305.0	0.0	36.6
Approach LOS	B	F	-	E

Lane	Left	Bypass	Left	Left	Bypass
Designated Moves	T	R	LT	LT	R
Assumed Moves	T	R	LT	LT	R
RT Channelized		Free			Free
Lane Util	1.000		1.000	1.000	
Critical Headway, s	5.193		5.193	5.193	
Entry Flow, veh/h	580	0	1843	41	0
Cap Entry Lane, veh/h	1054	2622	1130	179	2736
Entry HV Adj Factor	0.725	0.725	0.694	0.732	0.694
Flow Entry, veh/h	420	0	1280	30	0
Cap Entry, veh/h	763	1900	785	131	1900
V/C Ratio	0.551	0.000	1.631	0.229	0.000
Control Delay, s/veh	13.1	0.0	305.0	36.6	0.0
LOS	B	A	F	E	A
95th %tile Queue, veh	3	0	69	1	0

Movement	EBL	EBT	EBR	WBL	WBT	WBR	NBL	NBT	NBR	SBL	SBT	SBR
Right Turn Channelized												
Traffic Volume (veh/h)	0	110	0	0	450	0	840	0	0	0	0	0
Future Volume (veh/h)	0	110	0	0	450	0	840	0	0	0	0	0
Peak Hour Factor	1.00	1.00	1.00	1.00	1.00	1.00	1.00	1.00	1.00	1.00	1.00	1.00
Hourly flow rate (vph)	0	110	0	0	450	0	840	0	0	0	0	0
Approach Volume (veh/h)		110			450			840			0	
Crossing Volume (veh/h)		0			840			110			1290#	
High Capacity (veh/h)		1385			709			1271			490	
High v/c (veh/h)		0.08			0.63			0.66			0.00	
Low Capacity (veh/h)		1161			558			1058			370	
Low v/c (veh/h)		0.09			0.81			0.79			0.00	

Intersection Summary			
Maximum v/c High	0.66		
Maximum v/c Low	0.81		
Intersection Capacity Utilization	100.7%	ICU Level of Service	G
# Crossing flow exceeds 1200, method is not applicable			

Intersection	
Intersection Delay, s/veh	236.4
Intersection LOS	F

Approach	EB	WB	NB	SB
Entry Lanes	1	1	1	0
Conflicting Circle Lanes	1	1	1	1
Adj Approach Flow, veh/h	110	450	840	0
Demand Flow Rate, veh/h	152	648	1210	0
Vehicles Circulating, veh/h	0	1210	152	1858
Vehicles Exiting, veh/h	1858	152	0	0
Follow-Up Headway, s	3.186	3.186	3.186	3.186
Ped Vol Crossing Leg, #/h	0	0	0	0
Ped Cap Adj	1.000	1.000	1.000	1.000
Approach Delay, s/veh	5.8	465.7	143.8	0.0
Approach LOS	A	F	F	-

Lane	Left	Left	Left
Designated Moves	T	T	L
Assumed Moves	T	T	L
RT Channelized			
Lane Util	1.000	1.000	1.000
Critical Headway, s	5.193	5.193	5.193
Entry Flow, veh/h	152	648	1210
Cap Entry Lane, veh/h	1130	337	971
Entry HV Adj Factor	0.725	0.694	0.694
Flow Entry, veh/h	110	450	840
Cap Entry, veh/h	819	234	674
V/C Ratio	0.135	1.923	1.247
Control Delay, s/veh	5.8	465.7	143.8
LOS	A	F	F
95th %tile Queue, veh	0	32	31

Movement	EBL	EBT	EBR	WBL	WBT	WBR	NBL	NBT	NBR	SBL	SBT	SBR
Right Turn Channelized			MOYes						MOYes			
Traffic Volume (veh/h)	290	0	80	0	0	0	0	150	100	140	50	0
Future Volume (veh/h)	290	0	80	0	0	0	0	150	100	140	50	0
Peak Hour Factor	1.00	1.00	1.00	1.00	1.00	1.00	1.00	1.00	1.00	1.00	1.00	1.00
Hourly flow rate (vph)	290	0	80	0	0	0	0	150	100	140	50	0
Approach Volume (veh/h)		290			0			150			190	
Crossing Volume (veh/h)		190			440			430			0	
High Capacity (veh/h)		1193			979			987			1385	
High v/c (veh/h)		0.24			0.00			0.15			0.14	
Low Capacity (veh/h)		988			795			802			1161	
Low v/c (veh/h)		0.29			0.00			0.19			0.16	

Intersection Summary			
Maximum v/c High	0.24		
Maximum v/c Low	0.29		
Intersection Capacity Utilization	44.3%	ICU Level of Service	A

Intersection	
Intersection Delay, s/veh	5.1
Intersection LOS	A

Approach	EB	WB	NB	SB
Entry Lanes	1	0	1	1
Conflicting Circle Lanes	1	1	1	1
Adj Approach Flow, veh/h	370	0	250	190
Demand Flow Rate, veh/h	378	0	255	194
Vehicles Circulating, veh/h	194	449	439	0
Vehicles Exiting, veh/h	0	143	51	449
Follow-Up Headway, s	3.186	3.186	3.186	3.186
Ped Vol Crossing Leg, #/h	0	0	0	0
Ped Cap Adj	1.000	1.000	1.000	1.000
Approach Delay, s/veh	5.8	0.0	4.5	4.8
Approach LOS	A	-	A	A

Lane	Left	Bypass	Left	Bypass	Left
Designated Moves	LT	R	T	R	LT
Assumed Moves	LT	R	T	R	LT
RT Channelized		Free		Free	
Lane Util	1.000		1.000		1.000
Critical Headway, s	5.193		5.193		5.193
Entry Flow, veh/h	296	82	153	102	194
Cap Entry Lane, veh/h	931	1938	728	1938	1130
Entry HV Adj Factor	0.980	0.980	0.980	0.980	0.979
Flow Entry, veh/h	290	80	150	100	190
Cap Entry, veh/h	912	1900	714	1900	1107
V/C Ratio	0.318	0.042	0.210	0.053	0.172
Control Delay, s/veh	7.4	0.0	7.4	0.0	4.8
LOS	A	A	A	A	A
95th %tile Queue, veh	1	0	1	0	1

Movement	EBL	EBT	EBR	WBL	WBT	WBR	NBL	NBT	NBR	SBL	SBT	SBR
Right Turn Channelized						MOYes						MOYes
Traffic Volume (veh/h)	0	0	0	40	0	290	70	620	0	0	300	410
Future Volume (veh/h)	0	0	0	40	0	290	70	620	0	0	300	410
Peak Hour Factor	1.00	1.00	1.00	1.00	1.00	1.00	1.00	1.00	1.00	1.00	1.00	1.00
Hourly flow rate (vph)	0	0	0	40	0	290	70	620	0	0	300	410
Approach Volume (veh/h)		0			40			690			300	
Crossing Volume (veh/h)		340			690			0			110	
High Capacity (veh/h)		1060			801			1385			1271	
High v/c (veh/h)		0.00			0.05			0.50			0.24	
Low Capacity (veh/h)		868			638			1161			1058	
Low v/c (veh/h)		0.00			0.06			0.59			0.28	

Intersection Summary			
Maximum v/c High	0.50		
Maximum v/c Low	0.59		
Intersection Capacity Utilization	75.2%	ICU Level of Service	D

Intersection	
Intersection Delay, s/veh	5.9
Intersection LOS	A

Approach	EB	WB	NB	SB
Entry Lanes	0	1	1	1
Conflicting Circle Lanes	1	1	1	1
Adj Approach Flow, veh/h	0	330	690	710
Demand Flow Rate, veh/h	0	337	703	724
Vehicles Circulating, veh/h	347	703	0	112
Vehicles Exiting, veh/h	71	0	347	632
Follow-Up Headway, s	3.186	3.186	3.186	3.186
Ped Vol Crossing Leg, #/h	0	0	0	0
Ped Cap Adj	1.000	1.000	1.000	1.000
Approach Delay, s/veh	0.0	0.9	11.5	2.8
Approach LOS	-	A	B	A

Lane	Left	Bypass	Left	Left	Bypass
Designated Moves	LT	R	LT	T	R
Assumed Moves	LT	R	LT	T	R
RT Channelized		Free			Free
Lane Util	1.000		1.000	1.000	
Critical Headway, s	5.193		5.193	5.193	
Entry Flow, veh/h	41	296	703	306	418
Cap Entry Lane, veh/h	559	1938	1130	1010	1938
Entry HV Adj Factor	0.976	0.980	0.981	0.980	0.980
Flow Entry, veh/h	40	290	690	300	410
Cap Entry, veh/h	546	1900	1108	990	1900
V/C Ratio	0.073	0.153	0.622	0.303	0.216
Control Delay, s/veh	7.5	0.0	11.5	6.7	0.0
LOS	A	A	B	A	A
95th %tile Queue, veh	0	1	5	1	1

Movement	EBL	EBT	EBR	WBL	WBT	WBR	NBL	NBT	NBR	SBL	SBT	SBR
Lane Configurations												
Traffic Volume (veh/h)	510	0	0	0	0	0	0	0	0	130	0	0
Future Volume (Veh/h)	510	0	0	0	0	0	0	0	0	130	0	0
Sign Control		Stop			Stop			Free			Free	
Grade		0%			0%			0%			0%	
Peak Hour Factor	1.00	1.00	1.00	1.00	1.00	1.00	1.00	1.00	1.00	1.00	1.00	1.00
Hourly flow rate (vph)	510	0	0	0	0	0	0	0	0	130	0	0
Pedestrians												
Lane Width (ft)												
Walking Speed (ft/s)												
Percent Blockage												
Right turn flare (veh)												
Median type								None			None	
Median storage veh)												
Upstream signal (ft)												
pX, platoon unblocked												
vC, conflicting volume	260	260	0	260	260	0	0			0		
vC1, stage 1 conf vol												
vC2, stage 2 conf vol												
vCu, unblocked vol	260	260	0	260	260	0	0			0		
tC, single (s)	7.1	6.5	6.2	7.1	6.5	6.2	4.1			4.1		
tC, 2 stage (s)												
tF (s)	3.5	4.0	3.3	3.5	4.0	3.3	2.2			2.2		
p0 queue free %	22	100	100	100	100	100	100			92		
cM capacity (veh/h)	650	593	1085	650	593	1085	1623			1623		

Direction, Lane #	EB 1	NB 1	SB 1
Volume Total	510	0	130
Volume Left	510	0	130
Volume Right	0	0	0
cSH	650	1700	1623
Volume to Capacity	0.78	0.00	0.08
Queue Length 95th (ft)	190	0	7
Control Delay (s)	27.6	0.0	7.4
Lane LOS	D		A
Approach Delay (s)	27.6	0.0	7.4
Approach LOS	D		

Intersection Summary			
Average Delay	23.5		
Intersection Capacity Utilization	68.9%	ICU Level of Service	C
Analysis Period (min)	15		

Intersection	
Int Delay, s/veh	0

Movement	EBL	EBT	EBR	WBL	WBT	WBR	NBL	NBT	NBR	SBL	SBT	SBR
Traffic Vol, veh/h	510	0	0	0	0	0	0	0	0	130	0	0
Future Vol, veh/h	510	0	0	0	0	0	0	0	0	130	0	0
Conflicting Peds, #/hr	0	0	0	0	0	0	0	0	0	0	0	0
Sign Control	Stop	Stop	Stop	Stop	Stop	Stop	Free	Free	Free	Free	Free	Free
RT Channelized	-	-	None	-	-	None	-	-	None	-	-	None
Storage Length	-	-	-	-	-	-	-	-	-	-	-	-
Veh in Median Storage, #	-	0	-	-	0	-	-	0	-	-	0	-
Grade, %	-	0	-	-	0	-	-	0	-	-	0	-
Peak Hour Factor	100	100	100	100	100	100	100	100	100	100	100	100
Heavy Vehicles, %	2	2	2	2	2	2	2	2	2	2	2	2
Mvmt Flow	510	0	0	0	0	0	0	0	0	130	0	0

Major/Minor	Minor2			Major1			Major2		
Conflicting Flow All	0	260	0	0	0	0	0	0	0
Stage 1	0	260	-	-	-	-	-	-	-
Stage 2	0	0	-	-	-	-	-	-	-
Critical Hdwy	6.42	6.52	-	-	-	-	4.12	-	-
Critical Hdwy Stg 1	-	-	-	-	-	-	-	-	-
Critical Hdwy Stg 2	5.42	5.52	-	-	-	-	-	-	-
Follow-up Hdwy	3.518	4.018	-	-	-	-	2.218	-	-
Pot Cap-1 Maneuver	-	645	-	-	-	-	-	-	-
Stage 1	-	-	-	-	-	-	-	-	-
Stage 2	-	-	-	-	-	-	-	-	-
Platoon blocked, %					-	-		-	-
Mov Cap-1 Maneuver	-	0	-	-	-	-	-	-	-
Mov Cap-2 Maneuver	-	0	-	-	-	-	-	-	-
Stage 1	-	0	-	-	-	-	-	-	-
Stage 2	-	0	-	-	-	-	-	-	-

Approach	EB	NB	SB
HCM Control Delay, s		0	
HCM LOS	-		

Minor Lane/Major Mvmt	NBL	NBT	NBR	EBLn1	SBL	SBT	SBR
Capacity (veh/h)	-	-	-	-	-	-	-
HCM Lane V/C Ratio	-	-	-	-	-	-	-
HCM Control Delay (s)	0	-	-	-	-	-	-
HCM Lane LOS	A	-	-	-	-	-	-
HCM 95th %tile Q(veh)	-	-	-	-	-	-	-

Movement	EBL	EBT	EBR	WBL	WBT	WBR	NBL	NBT	NBR	SBL	SBT	SBR
Lane Configurations												
Traffic Volume (veh/h)	0	0	0	0	0	240	0	510	0	0	130	240
Future Volume (Veh/h)	0	0	0	0	0	240	0	510	0	0	130	240
Sign Control		Stop			Stop			Free			Free	
Grade		0%			0%			0%			0%	
Peak Hour Factor	1.00	1.00	1.00	1.00	1.00	1.00	1.00	1.00	1.00	1.00	1.00	1.00
Hourly flow rate (vph)	0	0	0	0	0	240	0	510	0	0	130	240
Pedestrians												
Lane Width (ft)												
Walking Speed (ft/s)												
Percent Blockage												
Right turn flare (veh)												
Median type								None			None	
Median storage veh)												
Upstream signal (ft)												
pX, platoon unblocked												
vC, conflicting volume	1000	760	250	760	880	510	370			510		
vC1, stage 1 conf vol												
vC2, stage 2 conf vol												
vCu, unblocked vol	1000	760	250	760	880	510	370			510		
tC, single (s)	7.1	6.5	6.2	7.1	6.5	6.2	4.1			4.1		
tC, 2 stage (s)												
tF (s)	3.5	4.0	3.3	3.5	4.0	3.3	2.2			2.2		
p0 queue free %	100	100	100	100	100	57	100			100		
cM capacity (veh/h)	127	336	789	323	286	563	1189			1055		

Direction, Lane #	WB 1	NB 1	SB 1
Volume Total	240	510	370
Volume Left	0	0	0
Volume Right	240	0	240
cSH	563	1700	1700
Volume to Capacity	0.43	0.30	0.22
Queue Length 95th (ft)	53	0	0
Control Delay (s)	16.0	0.0	0.0
Lane LOS	C		
Approach Delay (s)	16.0	0.0	0.0
Approach LOS	C		

Intersection Summary			
Average Delay	3.4		
Intersection Capacity Utilization	68.9%	ICU Level of Service	C
Analysis Period (min)	15		

Intersection	
Int Delay, s/veh	3.5

Movement	EBL	EBT	EBR	WBL	WBT	WBR	NBL	NBT	NBR	SBL	SBT	SBR
Traffic Vol, veh/h	0	0	0	0	0	240	0	510	0	0	130	240
Future Vol, veh/h	0	0	0	0	0	240	0	510	0	0	130	240
Conflicting Peds, #/hr	0	0	0	0	0	0	0	0	0	0	0	0
Sign Control	Stop	Stop	Stop	Stop	Stop	Stop	Free	Free	Free	Free	Free	Free
RT Channelized	-	-	None	-	-	None	-	-	None	-	-	None
Storage Length	-	-	-	-	-	-	-	-	-	-	-	-
Veh in Median Storage, #	-	0	-	-	0	-	-	0	-	-	0	-
Grade, %	-	0	-	-	0	-	-	0	-	-	0	-
Peak Hour Factor	100	100	100	100	100	100	100	100	100	100	100	100
Heavy Vehicles, %	2	2	2	2	2	2	2	2	2	2	2	2
Mvmt Flow	0	0	0	0	0	240	0	510	0	0	130	240

Major/Minor	Minor1			Major1			Major2		
Conflicting Flow All	760	880	510	370	0	0	510	0	0
Stage 1	510	510	-	-	-	-	-	-	-
Stage 2	250	370	-	-	-	-	-	-	-
Critical Hdwy	6.42	6.52	6.22	4.12	-	-	4.12	-	-
Critical Hdwy Stg 1	5.42	5.52	-	-	-	-	-	-	-
Critical Hdwy Stg 2	5.42	5.52	-	-	-	-	-	-	-
Follow-up Hdwy	3.518	4.018	3.318	2.218	-	-	2.218	-	-
Pot Cap-1 Maneuver	374	286	563	1189	-	-	1055	-	-
Stage 1	603	538	-	-	-	-	-	-	-
Stage 2	792	620	-	-	-	-	-	-	-
Platoon blocked, %					-	-		-	-
Mov Cap-1 Maneuver	374	0	563	1189	-	-	1055	-	-
Mov Cap-2 Maneuver	374	0	-	-	-	-	-	-	-
Stage 1	603	0	-	-	-	-	-	-	-
Stage 2	792	0	-	-	-	-	-	-	-

Approach	WB	NB	SB
HCM Control Delay, s	16.1	0	0
HCM LOS	C		

Minor Lane/Major Mvmt	NBL	NBT	NBR	WBLn1	SBL	SBT	SBR
Capacity (veh/h)	1189	-	-	563	1055	-	-
HCM Lane V/C Ratio	-	-	-	0.426	-	-	-
HCM Control Delay (s)	0	-	-	16.1	0	-	-
HCM Lane LOS	A	-	-	C	A	-	-
HCM 95th %tile Q(veh)	0	-	-	2.1	0	-	-

Movement	EBL	EBT	EBR	WBL	WBT	WBR	NBL	NBT	NBR	SBL	SBT	SBR
Right Turn Channelized			MOYes						MOYes			
Traffic Volume (veh/h)	600	0	40	0	0	0	0	90	70	290	50	0
Future Volume (veh/h)	600	0	40	0	0	0	0	90	70	290	50	0
Peak Hour Factor	1.00	1.00	1.00	1.00	1.00	1.00	1.00	1.00	1.00	1.00	1.00	1.00
Hourly flow rate (vph)	600	0	40	0	0	0	0	90	70	290	50	0
Approach Volume (veh/h)		600			0			90			340	
Crossing Volume (veh/h)		340			690			890			0	
High Capacity (veh/h)		1060			801			681			1385	
High v/c (veh/h)		0.57			0.00			0.13			0.25	
Low Capacity (veh/h)		868			638			533			1161	
Low v/c (veh/h)		0.69			0.00			0.17			0.29	

Intersection Summary			
Maximum v/c High	0.57		
Maximum v/c Low	0.69		
Intersection Capacity Utilization	66.3%	ICU Level of Service	C

Intersection	
Intersection Delay, s/veh	14.2
Intersection LOS	B

Approach	EB	WB	NB	SB
Entry Lanes	1	0	1	1
Conflicting Circle Lanes	1	1	1	1
Adj Approach Flow, veh/h	640	0	160	340
Demand Flow Rate, veh/h	653	0	163	347
Vehicles Circulating, veh/h	347	704	908	0
Vehicles Exiting, veh/h	0	296	51	704
Follow-Up Headway, s	3.186	3.186	3.186	3.186
Ped Vol Crossing Leg, #/h	0	0	0	0
Ped Cap Adj	1.000	1.000	1.000	1.000
Approach Delay, s/veh	20.4	0.0	6.2	6.2
Approach LOS	C	-	A	A

Lane	Left	Bypass	Left	Bypass	Left
Designated Moves	LT	R	T	R	LT
Assumed Moves	LT	R	T	R	LT
RT Channelized		Free		Free	
Lane Util	1.000		1.000		1.000
Critical Headway, s	5.193		5.193		5.193
Entry Flow, veh/h	612	41	92	71	347
Cap Entry Lane, veh/h	799	1938	456	1938	1130
Entry HV Adj Factor	0.980	0.980	0.980	0.980	0.980
Flow Entry, veh/h	600	40	90	70	340
Cap Entry, veh/h	783	1900	447	1900	1107
V/C Ratio	0.766	0.021	0.202	0.037	0.307
Control Delay, s/veh	21.8	0.0	11.1	0.0	6.2
LOS	C	A	B	A	A
95th %tile Queue, veh	7	0	1	0	1

Movement	EBL	EBT	WBT	WBR	SBL	SBR
Lane Configurations						
Traffic Volume (vph)	210	1560	2660	150	220	540
Future Volume (vph)	210	1560	2660	150	220	540
Ideal Flow (vphpl)	2100	2100	2100	2100	2100	2100
Total Lost time (s)	4.0	4.0	4.0		4.0	4.0
Lane Util. Factor	0.97	0.91	0.91		1.00	1.00
Frt	1.00	1.00	0.99		1.00	0.85
Flt Protected	0.95	1.00	1.00		0.95	1.00
Satd. Flow (prot)	3794	5621	5576		1956	1750
Flt Permitted	0.95	1.00	1.00		0.95	1.00
Satd. Flow (perm)	3794	5621	5576		1956	1750
Peak-hour factor, PHF	1.00	1.00	1.00	1.00	1.00	1.00
Adj. Flow (vph)	210	1560	2660	150	220	540
RTOR Reduction (vph)	0	0	6	0	0	81
Lane Group Flow (vph)	210	1560	2804	0	220	459
Turn Type	Prot	NA	NA		Perm	Perm
Protected Phases	7	4	8			
Permitted Phases					6	6
Actuated Green, G (s)	6.0	63.0	53.0		27.7	27.7
Effective Green, g (s)	6.0	63.0	53.0		27.7	27.7
Actuated g/C Ratio	0.06	0.64	0.54		0.28	0.28
Clearance Time (s)	4.0	4.0	4.0		4.0	4.0
Vehicle Extension (s)	3.0	3.0	3.0		3.0	3.0
Lane Grp Cap (vph)	230	3587	2994		548	491
v/s Ratio Prot	c0.06	0.28	c0.50			
v/s Ratio Perm					0.11	c0.26
v/c Ratio	0.91	0.43	0.94		0.40	0.94
Uniform Delay, d1	46.1	8.9	21.3		28.8	34.6
Progression Factor	1.00	1.00	1.00		1.00	1.00
Incremental Delay, d2	36.4	0.1	6.4		0.5	25.3
Delay (s)	82.5	9.0	27.7		29.3	59.9
Level of Service	F	A	C		C	E
Approach Delay (s)		17.7	27.7		51.0	
Approach LOS		B	C		D	

Intersection Summary			
HCM 2000 Control Delay	27.7	HCM 2000 Level of Service	C
HCM 2000 Volume to Capacity ratio	0.93		
Actuated Cycle Length (s)	98.7	Sum of lost time (s)	12.0
Intersection Capacity Utilization	86.4%	ICU Level of Service	E
Analysis Period (min)	15		

c Critical Lane Group

Movement	EBL	EBT	EBR	WBL	WBT	WBR	NBL	NBT	NBR	SBL	SBT	SBR
Lane Configurations												
Traffic Volume (vph)	150	1540	100	120	2480	150	50	20	40	360	70	290
Future Volume (vph)	150	1540	100	120	2480	150	50	20	40	360	70	290
Ideal Flow (vphpl)	2100	2100	2100	2100	2100	2100	2100	2100	2100	2100	2100	2100
Total Lost time (s)	4.0	4.0	4.0	4.0	4.0	4.0	4.0	4.0		4.0	4.0	
Lane Util. Factor	0.97	0.91	1.00	1.00	0.91	1.00	1.00	1.00		1.00	1.00	
Frt	1.00	1.00	0.85	1.00	1.00	0.85	1.00	0.90		1.00	0.88	
Flt Protected	0.95	1.00	1.00	0.95	1.00	1.00	0.95	1.00		0.95	1.00	
Satd. Flow (prot)	3794	5621	1750	1956	5621	1750	1956	1853		1956	1810	
Flt Permitted	0.95	1.00	1.00	0.95	1.00	1.00	0.28	1.00		0.72	1.00	
Satd. Flow (perm)	3794	5621	1750	1956	5621	1750	584	1853		1478	1810	
Peak-hour factor, PHF	1.00	1.00	1.00	1.00	1.00	1.00	1.00	1.00	1.00	1.00	1.00	1.00
Adj. Flow (vph)	150	1540	100	120	2480	150	50	20	40	360	70	290
RTOR Reduction (vph)	0	0	54	0	0	76	0	29	0	0	134	0
Lane Group Flow (vph)	150	1540	46	120	2480	74	50	31	0	360	226	0
Turn Type	Prot	NA	Perm	Prot	NA	Perm	Perm	NA		Perm	NA	
Protected Phases	7	4		3	8			2			6	
Permitted Phases			4			8	2			6		
Actuated Green, G (s)	4.7	31.5	31.5	7.3	34.1	34.1	18.1	18.1		18.1	18.1	
Effective Green, g (s)	4.7	31.5	31.5	7.3	34.1	34.1	18.1	18.1		18.1	18.1	
Actuated g/C Ratio	0.07	0.46	0.46	0.11	0.49	0.49	0.26	0.26		0.26	0.26	
Clearance Time (s)	4.0	4.0	4.0	4.0	4.0	4.0	4.0	4.0		4.0	4.0	
Vehicle Extension (s)	3.0	3.0	3.0	3.0	3.0	3.0	3.0	3.0		3.0	3.0	
Lane Grp Cap (vph)	258	2569	800	207	2781	866	153	486		388	475	
v/s Ratio Prot	0.04	0.27		c0.06	c0.44			0.02			0.12	
v/s Ratio Perm			0.03			0.04	0.09			c0.24		
v/c Ratio	0.58	0.60	0.06	0.58	0.89	0.09	0.33	0.06		0.93	0.48	
Uniform Delay, d1	31.1	14.0	10.4	29.3	15.7	9.2	20.5	19.0		24.8	21.4	
Progression Factor	1.00	1.00	1.00	1.00	1.00	1.00	1.00	1.00		1.00	1.00	
Incremental Delay, d2	3.3	0.4	0.0	3.9	4.1	0.0	5.6	0.2		30.7	3.4	
Delay (s)	34.5	14.4	10.5	33.2	19.8	9.2	26.1	19.3		55.4	24.8	
Level of Service	C	B	B	C	B	A	C	B		E	C	
Approach Delay (s)		15.8			19.8			22.4			40.1	
Approach LOS		B			B			C			D	

Intersection Summary			
HCM 2000 Control Delay	21.3	HCM 2000 Level of Service	C
HCM 2000 Volume to Capacity ratio	0.89		
Actuated Cycle Length (s)	68.9	Sum of lost time (s)	12.0
Intersection Capacity Utilization	83.4%	ICU Level of Service	E
Analysis Period (min)	15		

c Critical Lane Group

Movement	EBL	EBT	EBR	WBL	WBT	WBR	NBL	NBT	NBR	SBL	SBT	SBR
Lane Configurations												
Traffic Volume (vph)	320	1530	80	80	2160	330	30	10	30	250	20	560
Future Volume (vph)	320	1530	80	80	2160	330	30	10	30	250	20	560
Ideal Flow (vphpl)	2100	2100	2100	2100	2100	2100	2100	2100	2100	2100	2100	2100
Total Lost time (s)	4.0	4.0	4.0	4.0	4.0	4.0	4.0	4.0		4.0	4.0	4.0
Lane Util. Factor	0.97	0.91	1.00	1.00	0.91	1.00	1.00	1.00		1.00	1.00	1.00
Frt	1.00	1.00	0.85	1.00	1.00	0.85	1.00	0.89		1.00	1.00	0.85
Flt Protected	0.95	1.00	1.00	0.95	1.00	1.00	0.95	1.00		0.95	1.00	1.00
Satd. Flow (prot)	3794	5621	1750	1956	5621	1750	1956	1827		1956	2059	1750
Flt Permitted	0.95	1.00	1.00	0.95	1.00	1.00	0.74	1.00		0.73	1.00	1.00
Satd. Flow (perm)	3794	5621	1750	1956	5621	1750	1532	1827		1505	2059	1750
Peak-hour factor, PHF	1.00	1.00	1.00	1.00	1.00	1.00	1.00	1.00	1.00	1.00	1.00	1.00
Adj. Flow (vph)	320	1530	80	80	2160	330	30	10	30	250	20	560
RTOR Reduction (vph)	0	0	38	0	0	182	0	23	0	0	0	8
Lane Group Flow (vph)	320	1530	42	80	2160	148	30	17	0	250	20	552
Turn Type	Prot	NA	Perm	Prot	NA	Perm	Perm	NA		Perm	NA	pm+ov
Protected Phases	7	4		3	8			2			6	7
Permitted Phases			4			8	2			6		6
Actuated Green, G (s)	12.8	41.0	41.0	6.7	34.9	34.9	18.0	18.0		18.0	18.0	30.8
Effective Green, g (s)	12.8	41.0	41.0	6.7	34.9	34.9	18.0	18.0		18.0	18.0	30.8
Actuated g/C Ratio	0.16	0.53	0.53	0.09	0.45	0.45	0.23	0.23		0.23	0.23	0.40
Clearance Time (s)	4.0	4.0	4.0	4.0	4.0	4.0	4.0	4.0		4.0	4.0	4.0
Vehicle Extension (s)	3.0	3.0	3.0	3.0	3.0	3.0	3.0	3.0		3.0	3.0	3.0
Lane Grp Cap (vph)	625	2966	923	168	2524	786	354	423		348	476	783
v/s Ratio Prot	0.08	0.27		0.04	c0.38			0.01			0.01	c0.12
v/s Ratio Perm			0.02			0.08	0.02			0.17		0.20
v/c Ratio	0.51	0.52	0.05	0.48	0.86	0.19	0.08	0.04		0.72	0.04	0.70
Uniform Delay, d1	29.6	11.9	8.9	33.8	19.1	12.9	23.4	23.1		27.5	23.2	19.6
Progression Factor	1.00	1.00	1.00	1.00	1.00	1.00	1.00	1.00		1.00	1.00	1.00
Incremental Delay, d2	0.7	0.2	0.0	2.1	3.1	0.1	0.5	0.2		12.0	0.2	2.9
Delay (s)	30.3	12.1	8.9	36.0	22.2	13.0	23.9	23.3		39.6	23.3	22.5
Level of Service	C	B	A	D	C	B	C	C		D	C	C
Approach Delay (s)		15.0			21.5			23.6			27.7	
Approach LOS		B			C			C			C	

Intersection Summary			
HCM 2000 Control Delay	20.1	HCM 2000 Level of Service	C
HCM 2000 Volume to Capacity ratio	0.83		
Actuated Cycle Length (s)	77.7	Sum of lost time (s)	12.0
Intersection Capacity Utilization	82.5%	ICU Level of Service	E
Analysis Period (min)	15		

c Critical Lane Group

Movement	EBL	EBT	WBT	WBR	SBL	SBR
Lane Configurations						
Traffic Volume (vph)	310	1500	1930	150	190	640
Future Volume (vph)	310	1500	1930	150	190	640
Ideal Flow (vphpl)	2100	2100	2100	2100	2100	2100
Total Lost time (s)	4.0	4.0	4.0	4.0	4.0	4.0
Lane Util. Factor	0.97	0.95	0.95	1.00	1.00	0.88
Frt	1.00	1.00	1.00	0.85	1.00	0.85
Flt Protected	0.95	1.00	1.00	1.00	0.95	1.00
Satd. Flow (prot)	2977	3069	2912	1303	1956	3080
Flt Permitted	0.95	1.00	1.00	1.00	0.95	1.00
Satd. Flow (perm)	2977	3069	2912	1303	1956	3080
Peak-hour factor, PHF	1.00	1.00	1.00	1.00	1.00	1.00
Adj. Flow (vph)	310	1500	1930	150	190	640
RTOR Reduction (vph)	0	0	0	51	0	562
Lane Group Flow (vph)	310	1500	1930	99	190	78
Heavy Vehicles (%)	30%	30%	37%	37%	2%	2%
Turn Type	Prot	NA	NA	Perm	Perm	Over
Protected Phases	7	4	8			7
Permitted Phases				8	6	
Actuated Green, G (s)	14.0	102.1	84.1	84.1	17.6	14.0
Effective Green, g (s)	14.0	102.1	84.1	84.1	17.6	14.0
Actuated g/C Ratio	0.11	0.80	0.66	0.66	0.14	0.11
Clearance Time (s)	4.0	4.0	4.0	4.0	4.0	4.0
Vehicle Extension (s)	3.0	3.0	3.0	3.0	3.0	3.0
Lane Grp Cap (vph)	326	2453	1917	858	269	337
v/s Ratio Prot	c0.10	0.49	c0.66			0.03
v/s Ratio Perm				0.08	c0.10	
v/c Ratio	0.95	0.61	1.01	0.12	0.71	0.23
Uniform Delay, d1	56.5	5.0	21.8	8.1	52.6	51.9
Progression Factor	1.00	1.00	1.00	1.00	1.00	1.00
Incremental Delay, d2	36.9	0.5	22.2	0.1	8.2	0.4
Delay (s)	93.4	5.5	44.0	8.1	60.8	52.3
Level of Service	F	A	D	A	E	D
Approach Delay (s)		20.5	41.4		54.2	
Approach LOS		C	D		D	

Intersection Summary			
HCM 2000 Control Delay	35.7	HCM 2000 Level of Service	D
HCM 2000 Volume to Capacity ratio	0.95		
Actuated Cycle Length (s)	127.7	Sum of lost time (s)	12.0
Intersection Capacity Utilization	75.8%	ICU Level of Service	D
Analysis Period (min)	15		
c Critical Lane Group			

Movement	EBL	EBT	EBR	WBL	WBT	WBR	NBL	NBT	NBR	SBL	SBT	SBR
Lane Configurations												
Traffic Volume (vph)	160	1390	150	30	1680	270	80	20	20	300	70	320
Future Volume (vph)	160	1390	150	30	1680	270	80	20	20	300	70	320
Ideal Flow (vphpl)	2100	2100	2100	2100	2100	2100	2100	2100	2100	2100	2100	2100
Total Lost time (s)	4.0	4.0	4.0	4.0	4.0	4.0	4.0	4.0		4.0	4.0	4.0
Lane Util. Factor	0.97	0.95	1.00	1.00	0.95	1.00	1.00	1.00		1.00	1.00	1.00
Frt	1.00	1.00	0.85	1.00	1.00	0.85	1.00	0.93		1.00	1.00	0.85
Flt Protected	0.95	1.00	1.00	0.95	1.00	1.00	0.95	1.00		0.95	1.00	1.00
Satd. Flow (prot)	2977	3069	1373	1435	2871	1284	1956	1904		1956	2059	1750
Flt Permitted	0.95	1.00	1.00	0.95	1.00	1.00	0.70	1.00		0.73	1.00	1.00
Satd. Flow (perm)	2977	3069	1373	1435	2871	1284	1443	1904		1505	2059	1750
Peak-hour factor, PHF	1.00	1.00	1.00	1.00	1.00	1.00	1.00	1.00	1.00	1.00	1.00	1.00
Adj. Flow (vph)	160	1390	150	30	1680	270	80	20	20	300	70	320
RTOR Reduction (vph)	0	0	53	0	0	102	0	15	0	0	0	95
Lane Group Flow (vph)	160	1390	97	30	1680	168	80	25	0	300	70	225
Heavy Vehicles (%)	30%	30%	30%	39%	39%	39%	2%	2%	2%	2%	2%	2%
Turn Type	Prot	NA	Perm	Prot	NA	Perm	Perm	NA		Perm	NA	Perm
Protected Phases	7	4		3	8			2			6	
Permitted Phases			4			8	2			6		6
Actuated Green, G (s)	9.0	93.8	93.8	5.7	90.5	90.5	34.1	34.1		34.1	34.1	34.1
Effective Green, g (s)	9.0	93.8	93.8	5.7	90.5	90.5	34.1	34.1		34.1	34.1	34.1
Actuated g/C Ratio	0.06	0.64	0.64	0.04	0.62	0.62	0.23	0.23		0.23	0.23	0.23
Clearance Time (s)	4.0	4.0	4.0	4.0	4.0	4.0	4.0	4.0		4.0	4.0	4.0
Vehicle Extension (s)	3.0	3.0	3.0	3.0	3.0	3.0	3.0	3.0		3.0	3.0	3.0
Lane Grp Cap (vph)	184	1977	884	56	1784	798	337	445		352	482	409
v/s Ratio Prot	c0.05	c0.45		0.02	c0.59			0.01			0.03	
v/s Ratio Perm			0.07			0.13	0.06			c0.20		0.13
v/c Ratio	0.87	0.70	0.11	0.54	0.94	0.21	0.24	0.06		0.85	0.15	0.55
Uniform Delay, d1	67.7	16.8	9.9	68.7	25.1	12.0	45.2	43.3		53.3	44.2	49.0
Progression Factor	1.00	1.00	1.00	1.00	1.00	1.00	1.00	1.00		1.00	1.00	1.00
Incremental Delay, d2	32.6	1.2	0.1	9.5	10.5	0.1	1.7	0.2		22.1	0.6	5.2
Delay (s)	100.3	18.0	10.0	78.2	35.7	12.1	46.9	43.5		75.5	44.8	54.3
Level of Service	F	B	A	E	D	B	D	D		E	D	D
Approach Delay (s)		25.0			33.1			45.7			62.5	
Approach LOS		C			C			D			E	

Intersection Summary			
HCM 2000 Control Delay	34.9	HCM 2000 Level of Service	C
HCM 2000 Volume to Capacity ratio	0.91		
Actuated Cycle Length (s)	145.6	Sum of lost time (s)	12.0
Intersection Capacity Utilization	77.9%	ICU Level of Service	D
Analysis Period (min)	15		
c Critical Lane Group			

Movement	EBL	EBT	WBU	WBT	WBR	SBL	SBR
Lane Configurations							
Traffic Volume (vph)	20	1680	50	1950	10	30	40
Future Volume (vph)	20	1680	50	1950	10	30	40
Ideal Flow (vphpl)	2100	2100	2100	2100	2100	2100	2100
Total Lost time (s)	4.0	4.0	4.0	4.0	4.0	4.0	4.0
Lane Util. Factor	1.00	0.95	1.00	0.95	1.00	1.00	1.00
Frt	1.00	1.00	1.00	1.00	0.85	1.00	0.85
Flt Protected	0.95	1.00	0.95	1.00	1.00	0.95	1.00
Satd. Flow (prot)	1535	3069	1956	2871	1284	1956	1750
Flt Permitted	0.95	1.00	0.95	1.00	1.00	0.95	1.00
Satd. Flow (perm)	1535	3069	1956	2871	1284	1956	1750
Peak-hour factor, PHF	1.00	1.00	1.00	1.00	1.00	1.00	1.00
Adj. Flow (vph)	20	1680	50	1950	10	30	40
RTOR Reduction (vph)	0	0	0	0	3	0	34
Lane Group Flow (vph)	20	1680	50	1950	7	30	6
Heavy Vehicles (%)	30%	30%	2%	39%	39%	2%	2%
Turn Type	Prot	NA	Prot	NA	Perm	Prot	Perm
Protected Phases	7	4	3	8		6	
Permitted Phases					8		6
Actuated Green, G (s)	1.4	67.0	6.7	72.3	72.3	16.2	16.2
Effective Green, g (s)	1.4	67.0	6.7	72.3	72.3	16.2	16.2
Actuated g/C Ratio	0.01	0.66	0.07	0.71	0.71	0.16	0.16
Clearance Time (s)	4.0	4.0	4.0	4.0	4.0	4.0	4.0
Vehicle Extension (s)	3.0	3.0	3.0	3.0	3.0	3.0	3.0
Lane Grp Cap (vph)	21	2017	128	2037	911	310	278
v/s Ratio Prot	c0.01	0.55	0.03	c0.68		c0.02	
v/s Ratio Perm					0.01		0.00
v/c Ratio	0.95	0.83	0.39	0.96	0.01	0.10	0.02
Uniform Delay, d1	50.2	13.2	45.6	13.4	4.3	36.6	36.2
Progression Factor	1.00	1.00	1.00	1.00	1.00	1.00	1.00
Incremental Delay, d2	173.4	3.1	2.0	11.4	0.0	0.6	0.2
Delay (s)	223.7	16.3	47.6	24.8	4.3	37.2	36.3
Level of Service	F	B	D	C	A	D	D
Approach Delay (s)		18.8		25.3		36.7	
Approach LOS		B		C		D	

Intersection Summary			
HCM 2000 Control Delay	22.6	HCM 2000 Level of Service	C
HCM 2000 Volume to Capacity ratio	0.80		
Actuated Cycle Length (s)	101.9	Sum of lost time (s)	12.0
Intersection Capacity Utilization	58.8%	ICU Level of Service	B
Analysis Period (min)	15		
c Critical Lane Group			

Movement	EBL	EBT	EBR	WBL	WBT	WBR	NBL	NBT	NBR	SBL	SBT	SBR
Lane Configurations												
Traffic Volume (veh/h)	0	1600	160	0	1990	10	0	0	20	0	0	10
Future Volume (Veh/h)	0	1600	160	0	1990	10	0	0	20	0	0	10
Sign Control		Free			Free			Stop			Stop	
Grade		0%			0%			0%			0%	
Peak Hour Factor	1.00	1.00	1.00	1.00	1.00	1.00	1.00	1.00	1.00	1.00	1.00	1.00
Hourly flow rate (vph)	0	1600	160	0	1990	10	0	0	20	0	0	10
Pedestrians												
Lane Width (ft)												
Walking Speed (ft/s)												
Percent Blockage												
Right turn flare (veh)												
Median type		None			None							
Median storage veh)												
Upstream signal (ft)												
pX, platoon unblocked												
vC, conflicting volume	2000			1760			2685	3680	880	2815	3755	1000
vC1, stage 1 conf vol												
vC2, stage 2 conf vol												
vCu, unblocked vol	2000			1760			2685	3680	880	2815	3755	1000
tC, single (s)	4.1			4.1			7.5	6.5	6.9	7.5	6.5	6.9
tC, 2 stage (s)												
tF (s)	2.2			2.2			3.5	4.0	3.3	3.5	4.0	3.3
p0 queue free %	100			100			100	100	93	100	100	96
cM capacity (veh/h)	283			351			10	5	290	8	4	241

Direction, Lane #	EB 1	EB 2	WB 1	WB 2	NB 1	SB 1
Volume Total	1067	693	1327	673	20	10
Volume Left	0	0	0	0	0	0
Volume Right	0	160	0	10	20	10
cSH	1700	1700	1700	1700	290	241
Volume to Capacity	0.63	0.41	0.78	0.40	0.07	0.04
Queue Length 95th (ft)	0	0	0	0	6	3
Control Delay (s)	0.0	0.0	0.0	0.0	18.3	20.5
Lane LOS					C	C
Approach Delay (s)	0.0		0.0		18.3	20.5
Approach LOS					C	C

Intersection Summary			
Average Delay	0.2		
Intersection Capacity Utilization	60.1%	ICU Level of Service	B
Analysis Period (min)	15		

Intersection	
Int Delay, s/veh	0.2

Movement	EBL	EBT	EBR	WBL	WBT	WBR	NBL	NBT	NBR	SBL	SBT	SBR
Traffic Vol, veh/h	0	1600	160	0	1990	10	0	0	20	0	0	10
Future Vol, veh/h	0	1600	160	0	1990	10	0	0	20	0	0	10
Conflicting Peds, #/hr	0	0	0	0	0	0	0	0	0	0	0	0
Sign Control	Free	Free	Free	Free	Free	Free	Stop	Stop	Stop	Stop	Stop	Stop
RT Channelized	-	-	None	-	-	None	-	-	None	-	-	None
Storage Length	-	-	-	-	-	-	-	-	0	-	-	0
Veh in Median Storage, #	-	0	-	-	0	-	-	0	-	-	0	-
Grade, %	-	0	-	-	0	-	-	0	-	-	0	-
Peak Hour Factor	100	100	100	100	100	100	100	100	100	100	100	100
Heavy Vehicles, %	2	2	2	2	2	2	2	2	2	2	2	2
Mvmt Flow	0	1600	160	0	1990	10	0	0	20	0	0	10

Major/Minor	Major1			Major2			Minor1			Minor2		
Conflicting Flow All	2000	0	0	1760	0	0	2675	3680	880	2795	3755	1000
Stage 1	-	-	-	-	-	-	1680	1680	-	1995	1995	-
Stage 2	-	-	-	-	-	-	995	2000	-	800	1760	-
Critical Hdwy	4.14	-	-	4.14	-	-	7.54	6.54	6.94	7.54	6.54	6.94
Critical Hdwy Stg 1	-	-	-	-	-	-	6.54	5.54	-	6.54	5.54	-
Critical Hdwy Stg 2	-	-	-	-	-	-	6.54	5.54	-	6.54	5.54	-
Follow-up Hdwy	2.22	-	-	2.22	-	-	3.52	4.02	3.32	3.52	4.02	3.32
Pot Cap-1 Maneuver	283	-	-	351	-	-	11	5	290	9	4	241
Stage 1	-	-	-	-	-	-	98	150	-	62	104	-
Stage 2	-	-	-	-	-	-	262	103	-	345	136	-
Platoon blocked, %		-	-		-	-						
Mov Cap-1 Maneuver	283	-	-	351	-	-	11	5	290	8	4	241
Mov Cap-2 Maneuver	-	-	-	-	-	-	11	5	-	8	4	-
Stage 1	-	-	-	-	-	-	98	150	-	62	104	-
Stage 2	-	-	-	-	-	-	251	103	-	321	136	-

Approach	EB	WB	NB	SB
HCM Control Delay, s	0	0	18.3	20.6
HCM LOS			C	C

Minor Lane/Major Mvmt	NBLn1	EBL	EBT	EBR	WBL	WBT	WBR	SBLn1
Capacity (veh/h)	290	283	-	-	351	-	-	241
HCM Lane V/C Ratio	0.069	-	-	-	-	-	-	0.041
HCM Control Delay (s)	18.3	0	-	-	0	-	-	20.6
HCM Lane LOS	C	A	-	-	A	-	-	C
HCM 95th %tile Q(veh)	0.2	0	-	-	0	-	-	0.1

Movement	EBL	EBT	EBR	WBL	WBT	WBR	NBL	NBT	NBR	SBL	SBT	SBR
Lane Configurations												
Traffic Volume (veh/h)	0	1620	10	0	2000	10	0	0	10	0	0	10
Future Volume (Veh/h)	0	1620	10	0	2000	10	0	0	10	0	0	10
Sign Control		Free			Free			Stop			Stop	
Grade		0%			0%			0%			0%	
Peak Hour Factor	1.00	1.00	1.00	1.00	1.00	1.00	1.00	1.00	1.00	1.00	1.00	1.00
Hourly flow rate (vph)	0	1620	10	0	2000	10	0	0	10	0	0	10
Pedestrians												
Lane Width (ft)												
Walking Speed (ft/s)												
Percent Blockage												
Right turn flare (veh)												
Median type		None			None							
Median storage veh)												
Upstream signal (ft)												
pX, platoon unblocked												
vC, conflicting volume	2010			1630			2635	3635	815	2825	3635	1005
vC1, stage 1 conf vol												
vC2, stage 2 conf vol												
vCu, unblocked vol	2010			1630			2635	3635	815	2825	3635	1005
tC, single (s)	4.1			4.1			7.5	6.5	6.9	7.5	6.5	6.9
tC, 2 stage (s)												
tF (s)	2.2			2.2			3.5	4.0	3.3	3.5	4.0	3.3
p0 queue free %	100			100			100	100	97	100	100	96
cM capacity (veh/h)	280			394			11	5	321	8	5	240

Direction, Lane #	EB 1	EB 2	WB 1	WB 2	NB 1	SB 1
Volume Total	1080	550	1333	677	10	10
Volume Left	0	0	0	0	0	0
Volume Right	0	10	0	10	10	10
cSH	1700	1700	1700	1700	321	240
Volume to Capacity	0.64	0.32	0.78	0.40	0.03	0.04
Queue Length 95th (ft)	0	0	0	0	2	3
Control Delay (s)	0.0	0.0	0.0	0.0	16.6	20.7
Lane LOS					C	C
Approach Delay (s)	0.0		0.0		16.6	20.7
Approach LOS					C	C

Intersection Summary			
Average Delay	0.1		
Intersection Capacity Utilization	60.3%	ICU Level of Service	B
Analysis Period (min)	15		

Intersection	
Int Delay, s/veh	0.1

Movement	EBL	EBT	EBR	WBL	WBT	WBR	NBL	NBT	NBR	SBL	SBT	SBR
Traffic Vol, veh/h	0	1620	10	0	2000	10	0	0	10	0	0	10
Future Vol, veh/h	0	1620	10	0	2000	10	0	0	10	0	0	10
Conflicting Peds, #/hr	0	0	0	0	0	0	0	0	0	0	0	0
Sign Control	Free	Free	Free	Free	Free	Free	Stop	Stop	Stop	Stop	Stop	Stop
RT Channelized	-	-	None	-	-	None	-	-	None	-	-	None
Storage Length	-	-	-	-	-	-	-	-	0	-	-	0
Veh in Median Storage, #	-	0	-	-	0	-	-	0	-	-	0	-
Grade, %	-	0	-	-	0	-	-	0	-	-	0	-
Peak Hour Factor	100	100	100	100	100	100	100	100	100	100	100	100
Heavy Vehicles, %	2	2	2	2	2	2	2	2	2	2	2	2
Mvmt Flow	0	1620	10	0	2000	10	0	0	10	0	0	10

Major/Minor	Major1			Major2			Minor1			Minor2		
Conflicting Flow All	2010	0	0	1630	0	0	2625	3635	815	2815	3635	1005
Stage 1	-	-	-	-	-	-	1625	1625	-	2005	2005	-
Stage 2	-	-	-	-	-	-	1000	2010	-	810	1630	-
Critical Hdwy	4.14	-	-	4.14	-	-	7.54	6.54	6.94	7.54	6.54	6.94
Critical Hdwy Stg 1	-	-	-	-	-	-	6.54	5.54	-	6.54	5.54	-
Critical Hdwy Stg 2	-	-	-	-	-	-	6.54	5.54	-	6.54	5.54	-
Follow-up Hdwy	2.22	-	-	2.22	-	-	3.52	4.02	3.32	3.52	4.02	3.32
Pot Cap-1 Maneuver	280	-	-	394	-	-	12	5	321	8	5	240
Stage 1	-	-	-	-	-	-	107	159	-	61	103	-
Stage 2	-	-	-	-	-	-	261	102	-	340	158	-
Platoon blocked, %		-	-		-	-						
Mov Cap-1 Maneuver	280	-	-	394	-	-	12	5	321	8	5	240
Mov Cap-2 Maneuver	-	-	-	-	-	-	12	5	-	8	5	-
Stage 1	-	-	-	-	-	-	107	159	-	61	103	-
Stage 2	-	-	-	-	-	-	250	102	-	329	158	-

Approach	EB	WB	NB	SB
HCM Control Delay, s	0	0	16.6	20.7
HCM LOS			C	C

Minor Lane/Major Mvmt	NBLn1	EBL	EBT	EBR	WBL	WBT	WBR	SBLn1
Capacity (veh/h)	321	280	-	-	394	-	-	240
HCM Lane V/C Ratio	0.031	-	-	-	-	-	-	0.042
HCM Control Delay (s)	16.6	0	-	-	0	-	-	20.7
HCM Lane LOS	C	A	-	-	A	-	-	C
HCM 95th %tile Q(veh)	0.1	0	-	-	0	-	-	0.1

Movement	EBL	EBT	EBR	WBL	WBT	WBR	NBL	NBT	NBR	SBL	SBT	SBR
Lane Configurations												
Traffic Volume (veh/h)	0	1440	180	0	1960	10	0	0	60	0	0	40
Future Volume (Veh/h)	0	1440	180	0	1960	10	0	0	60	0	0	40
Sign Control		Free			Free			Stop			Stop	
Grade		0%			0%			0%			0%	
Peak Hour Factor	1.00	1.00	1.00	1.00	1.00	1.00	1.00	1.00	1.00	1.00	1.00	1.00
Hourly flow rate (vph)	0	1440	180	0	1960	10	0	0	60	0	0	40
Pedestrians												
Lane Width (ft)												
Walking Speed (ft/s)												
Percent Blockage												
Right turn flare (veh)												
Median type		None			None							
Median storage veh)												
Upstream signal (ft)												
pX, platoon unblocked												
vC, conflicting volume	1970			1620			2550	3500	810	2745	3585	985
vC1, stage 1 conf vol												
vC2, stage 2 conf vol												
vCu, unblocked vol	1970			1620			2550	3500	810	2745	3585	985
tC, single (s)	4.8			4.1			7.5	6.5	6.9	7.5	6.5	6.9
tC, 2 stage (s)												
tF (s)	2.5			2.2			3.5	4.0	3.3	3.5	4.0	3.3
p0 queue free %	100			100			100	100	81	100	100	84
cM capacity (veh/h)	194			398			11	6	323	8	5	247

Direction, Lane #	EB 1	EB 2	WB 1	WB 2	NB 1	SB 1
Volume Total	960	660	1307	663	60	40
Volume Left	0	0	0	0	0	0
Volume Right	0	180	0	10	60	40
cSH	1700	1700	1700	1700	323	247
Volume to Capacity	0.56	0.39	0.77	0.39	0.19	0.16
Queue Length 95th (ft)	0	0	0	0	17	14
Control Delay (s)	0.0	0.0	0.0	0.0	18.7	22.4
Lane LOS					C	C
Approach Delay (s)	0.0		0.0		18.7	22.4
Approach LOS					C	C

Intersection Summary			
Average Delay	0.5		
Intersection Capacity Utilization	59.3%	ICU Level of Service	B
Analysis Period (min)	15		

Intersection	
Int Delay, s/veh	0.5

Movement	EBL	EBT	EBR	WBL	WBT	WBR	NBL	NBT	NBR	SBL	SBT	SBR
Traffic Vol, veh/h	0	1440	180	0	1960	10	0	0	60	0	0	40
Future Vol, veh/h	0	1440	180	0	1960	10	0	0	60	0	0	40
Conflicting Peds, #/hr	0	0	0	0	0	0	0	0	0	0	0	0
Sign Control	Free	Free	Free	Free	Free	Free	Stop	Stop	Stop	Stop	Stop	Stop
RT Channelized	-	-	None	-	-	None	-	-	None	-	-	None
Storage Length	-	-	-	-	-	-	-	-	0	-	-	0
Veh in Median Storage, #	-	0	-	-	0	-	-	0	-	-	0	-
Grade, %	-	0	-	-	0	-	-	0	-	-	0	-
Peak Hour Factor	100	100	100	100	100	100	100	100	100	100	100	100
Heavy Vehicles, %	33	33	2	2	41	41	2	2	2	2	2	2
Mvmt Flow	0	1440	180	0	1960	10	0	0	60	0	0	40

Major/Minor	Major1			Major2			Minor1			Minor2		
Conflicting Flow All	1970	0	0	1620	0	0	2510	3500	810	2685	3585	985
Stage 1	-	-	-	-	-	-	1530	1530	-	1965	1965	-
Stage 2	-	-	-	-	-	-	980	1970	-	720	1620	-
Critical Hdwy	4.76	-	-	4.14	-	-	7.54	6.54	6.94	7.54	6.54	6.94
Critical Hdwy Stg 1	-	-	-	-	-	-	6.54	5.54	-	6.54	5.54	-
Critical Hdwy Stg 2	-	-	-	-	-	-	6.54	5.54	-	6.54	5.54	-
Follow-up Hdwy	2.53	-	-	2.22	-	-	3.52	4.02	3.32	3.52	4.02	3.32
Pot Cap-1 Maneuver	194	-	-	398	-	-	14	6	323	10	5	247
Stage 1	-	-	-	-	-	-	122	177	-	65	107	-
Stage 2	-	-	-	-	-	-	268	107	-	385	160	-
Platoon blocked, %		-	-		-	-						
Mov Cap-1 Maneuver	194	-	-	398	-	-	12	6	323	8	5	247
Mov Cap-2 Maneuver	-	-	-	-	-	-	12	6	-	8	5	-
Stage 1	-	-	-	-	-	-	122	177	-	65	107	-
Stage 2	-	-	-	-	-	-	225	107	-	313	160	-

Approach	EB	WB	NB	SB
HCM Control Delay, s	0	0	18.7	22.4
HCM LOS			C	C

Minor Lane/Major Mvmt	NBLn1	EBL	EBT	EBR	WBL	WBT	WBR	SBLn1
Capacity (veh/h)	323	194	-	-	398	-	-	247
HCM Lane V/C Ratio	0.186	-	-	-	-	-	-	0.162
HCM Control Delay (s)	18.7	0	-	-	0	-	-	22.4
HCM Lane LOS	C	A	-	-	A	-	-	C
HCM 95th %tile Q(veh)	0.7	0	-	-	0	-	-	0.6

Movement	EBL	EBT	EBR	WBL	WBT	WBR	NBL	NBT	NBR	SBL	SBT	SBR
Lane Configurations												
Traffic Volume (vph)	80	1280	150	30	1850	10	50	10	20	60	10	40
Future Volume (vph)	80	1280	150	30	1850	10	50	10	20	60	10	40
Ideal Flow (vphpl)	2100	2100	2100	2100	2100	2100	2100	2100	2100	2100	2100	2100
Total Lost time (s)	4.0	4.0	4.0	4.0	4.0		4.0	4.0		4.0	4.0	
Lane Util. Factor	1.00	0.95	1.00	1.00	0.95		1.00	1.00		1.00	1.00	
Frt	1.00	1.00	0.85	1.00	1.00		1.00	0.90		1.00	0.88	
Flt Protected	0.95	1.00	1.00	0.95	1.00		0.95	1.00		0.95	1.00	
Satd. Flow (prot)	1500	3000	1342	1415	2828		1956	1853		1956	1812	
Flt Permitted	0.95	1.00	1.00	0.95	1.00		0.72	1.00		0.74	1.00	
Satd. Flow (perm)	1500	3000	1342	1415	2828		1491	1853		1519	1812	
Peak-hour factor, PHF	1.00	1.00	1.00	1.00	1.00	1.00	1.00	1.00	1.00	1.00	1.00	1.00
Adj. Flow (vph)	80	1280	150	30	1850	10	50	10	20	60	10	40
RTOR Reduction (vph)	0	0	39	0	0	0	0	18	0	0	37	0
Lane Group Flow (vph)	80	1280	111	30	1860	0	50	12	0	60	13	0
Heavy Vehicles (%)	33%	33%	33%	41%	41%	41%	2%	2%	2%	2%	2%	2%
Turn Type	Prot	NA	Perm	Prot	NA		Perm	NA		Perm	NA	
Protected Phases	7	4		3	8			2			6	
Permitted Phases			4				2			6		
Actuated Green, G (s)	5.0	64.7	64.7	2.8	62.5		7.6	7.6		7.6	7.6	
Effective Green, g (s)	5.0	64.7	64.7	2.8	62.5		7.6	7.6		7.6	7.6	
Actuated g/C Ratio	0.06	0.74	0.74	0.03	0.72		0.09	0.09		0.09	0.09	
Clearance Time (s)	4.0	4.0	4.0	4.0	4.0		4.0	4.0		4.0	4.0	
Vehicle Extension (s)	3.0	3.0	3.0	3.0	3.0		3.0	3.0		3.0	3.0	
Lane Grp Cap (vph)	86	2228	996	45	2029		130	161		132	158	
v/s Ratio Prot	c0.05	0.43		0.02	c0.66			0.01			0.01	
v/s Ratio Perm			0.08				0.03			c0.04		
v/c Ratio	0.93	0.57	0.11	0.67	0.92		0.38	0.07		0.45	0.09	
Uniform Delay, d1	40.9	5.0	3.1	41.7	10.1		37.5	36.5		37.8	36.6	
Progression Factor	1.00	1.00	1.00	1.00	1.00		1.00	1.00		1.00	1.00	
Incremental Delay, d2	73.9	0.4	0.1	31.5	7.0		1.9	0.2		2.5	0.2	
Delay (s)	114.8	5.4	3.2	73.2	17.2		39.4	36.7		40.3	36.8	
Level of Service	F	A	A	E	B		D	D		D	D	
Approach Delay (s)		11.0			18.1			38.4			38.7	
Approach LOS		B			B			D			D	

Intersection Summary			
HCM 2000 Control Delay	16.2	HCM 2000 Level of Service	B
HCM 2000 Volume to Capacity ratio	0.86		
Actuated Cycle Length (s)	87.1	Sum of lost time (s)	12.0
Intersection Capacity Utilization	70.2%	ICU Level of Service	C
Analysis Period (min)	15		
c Critical Lane Group			

Movement	EBL	EBT	EBR	WBL	WBT	WBR	NBL	NBT	NBR	SBL	SBT	SBR
Lane Configurations												
Traffic Volume (veh/h)	0	1200	150	0	1850	10	0	0	10	0	0	40
Future Volume (Veh/h)	0	1200	150	0	1850	10	0	0	10	0	0	40
Sign Control		Free			Free			Stop			Stop	
Grade		0%			0%			0%			0%	
Peak Hour Factor	1.00	1.00	1.00	1.00	1.00	1.00	1.00	1.00	1.00	1.00	1.00	1.00
Hourly flow rate (vph)	0	1200	150	0	1850	10	0	0	10	0	0	40
Pedestrians												
Lane Width (ft)												
Walking Speed (ft/s)												
Percent Blockage												
Right turn flare (veh)												
Median type		None			None							
Median storage veh)												
Upstream signal (ft)												
pX, platoon unblocked												
vC, conflicting volume	1860			1350			2240	3135	675	2465	3205	930
vC1, stage 1 conf vol												
vC2, stage 2 conf vol												
vCu, unblocked vol	1860			1350			2240	3135	675	2465	3205	930
tC, single (s)	4.7			4.9			7.5	6.5	6.9	7.5	6.5	6.9
tC, 2 stage (s)												
tF (s)	2.5			2.6			3.5	4.0	3.3	3.5	4.0	3.3
p0 queue free %	100			100			100	100	97	100	100	85
cM capacity (veh/h)	223			349			20	11	396	15	10	269

Direction, Lane #	EB 1	EB 2	WB 1	WB 2	NB 1	SB 1
Volume Total	800	550	1233	627	10	40
Volume Left	0	0	0	0	0	0
Volume Right	0	150	0	10	10	40
cSH	1700	1700	1700	1700	396	269
Volume to Capacity	0.47	0.32	0.73	0.37	0.03	0.15
Queue Length 95th (ft)	0	0	0	0	2	13
Control Delay (s)	0.0	0.0	0.0	0.0	14.3	20.7
Lane LOS					B	C
Approach Delay (s)	0.0		0.0		14.3	20.7
Approach LOS					B	C

Intersection Summary			
Average Delay	0.3		
Intersection Capacity Utilization	56.6%	ICU Level of Service	B
Analysis Period (min)	15		

Intersection	
Int Delay, s/veh	0.3

Movement	EBL	EBT	EBR	WBL	WBT	WBR	NBL	NBT	NBR	SBL	SBT	SBR
Traffic Vol, veh/h	0	1200	150	0	1850	10	0	0	10	0	0	40
Future Vol, veh/h	0	1200	150	0	1850	10	0	0	10	0	0	40
Conflicting Peds, #/hr	0	0	0	0	0	0	0	0	0	0	0	0
Sign Control	Free	Free	Free	Free	Free	Free	Stop	Stop	Stop	Stop	Stop	Stop
RT Channelized	-	-	None	-	-	None	-	-	None	-	-	None
Storage Length	-	-	-	-	-	-	-	-	0	-	-	0
Veh in Median Storage, #	-	0	-	-	0	-	-	0	-	-	0	-
Grade, %	-	0	-	-	0	-	-	0	-	-	0	-
Peak Hour Factor	100	100	100	100	100	100	100	100	100	100	100	100
Heavy Vehicles, %	31	31	31	39	39	39	2	2	2	2	2	2
Mvmt Flow	0	1200	150	0	1850	10	0	0	10	0	0	40

Major/Minor	Major1			Major2			Minor1			Minor2		
Conflicting Flow All	1860	0	0	1350	0	0	2200	3135	675	2455	3205	930
Stage 1	-	-	-	-	-	-	1275	1275	-	1855	1855	-
Stage 2	-	-	-	-	-	-	925	1860	-	600	1350	-
Critical Hdwy	4.72	-	-	4.88	-	-	7.54	6.54	6.94	7.54	6.54	6.94
Critical Hdwy Stg 1	-	-	-	-	-	-	6.54	5.54	-	6.54	5.54	-
Critical Hdwy Stg 2	-	-	-	-	-	-	6.54	5.54	-	6.54	5.54	-
Follow-up Hdwy	2.51	-	-	2.59	-	-	3.52	4.02	3.32	3.52	4.02	3.32
Pot Cap-1 Maneuver	223	-	-	349	-	-	25	11	396	16	10	269
Stage 1	-	-	-	-	-	-	177	236	-	76	122	-
Stage 2	-	-	-	-	-	-	290	121	-	455	217	-
Platoon blocked, %		-	-		-	-						
Mov Cap-1 Maneuver	223	-	-	349	-	-	21	11	396	16	10	269
Mov Cap-2 Maneuver	-	-	-	-	-	-	21	11	-	16	10	-
Stage 1	-	-	-	-	-	-	177	236	-	76	122	-
Stage 2	-	-	-	-	-	-	247	121	-	444	217	-

Approach	EB	WB	NB	SB
HCM Control Delay, s	0	0	14.3	20.7
HCM LOS			B	C

Minor Lane/Major Mvmt	NBLn1	EBL	EBT	EBR	WBL	WBT	WBR	SBLn1
Capacity (veh/h)	396	223	-	-	349	-	-	269
HCM Lane V/C Ratio	0.025	-	-	-	-	-	-	0.149
HCM Control Delay (s)	14.3	0	-	-	0	-	-	20.7
HCM Lane LOS	B	A	-	-	A	-	-	C
HCM 95th %tile Q(veh)	0.1	0	-	-	0	-	-	0.5

Movement	EBL	EBT	EBR	WBL	WBT	WBR	NBL	NBT	NBR	SBL	SBT	SBR
Lane Configurations												
Traffic Volume (vph)	50	1150	10	30	1750	30	60	10	30	50	10	50
Future Volume (vph)	50	1150	10	30	1750	30	60	10	30	50	10	50
Ideal Flow (vphpl)	2100	2100	2100	2100	2100	2100	2100	2100	2100	2100	2100	2100
Total Lost time (s)	4.0	4.0		4.0	4.0		4.0	4.0		4.0	4.0	
Lane Util. Factor	1.00	0.95		1.00	0.95		1.00	1.00		1.00	1.00	
Frt	1.00	1.00		1.00	1.00		1.00	0.89		1.00	0.88	
Flt Protected	0.95	1.00		0.95	1.00		0.95	1.00		0.95	1.00	
Satd. Flow (prot)	1523	3042		1435	2863		1956	1827		1956	1801	
Flt Permitted	0.95	1.00		0.95	1.00		0.72	1.00		0.73	1.00	
Satd. Flow (perm)	1523	3042		1435	2863		1478	1827		1505	1801	
Peak-hour factor, PHF	1.00	1.00	1.00	1.00	1.00	1.00	1.00	1.00	1.00	1.00	1.00	1.00
Adj. Flow (vph)	50	1150	10	30	1750	30	60	10	30	50	10	50
RTOR Reduction (vph)	0	1	0	0	1	0	0	27	0	0	46	0
Lane Group Flow (vph)	50	1159	0	30	1779	0	60	13	0	50	14	0
Heavy Vehicles (%)	31%	31%	31%	39%	39%	39%	2%	2%	2%	2%	2%	2%
Turn Type	Prot	NA		Prot	NA		Perm	NA		Perm	NA	
Protected Phases	7	4		3	8			2			6	
Permitted Phases							2			6		
Actuated Green, G (s)	2.9	60.9		2.1	60.1		7.1	7.1		7.1	7.1	
Effective Green, g (s)	2.9	60.9		2.1	60.1		7.1	7.1		7.1	7.1	
Actuated g/C Ratio	0.04	0.74		0.03	0.73		0.09	0.09		0.09	0.09	
Clearance Time (s)	4.0	4.0		4.0	4.0		4.0	4.0		4.0	4.0	
Vehicle Extension (s)	3.0	3.0		3.0	3.0		3.0	3.0		3.0	3.0	
Lane Grp Cap (vph)	53	2256		36	2095		127	157		130	155	
v/s Ratio Prot	c0.03	0.38		0.02	c0.62			0.01			0.01	
v/s Ratio Perm							c0.04			0.03		
v/c Ratio	0.94	0.51		0.83	0.85		0.47	0.08		0.38	0.09	
Uniform Delay, d1	39.5	4.4		39.8	7.8		35.7	34.5		35.4	34.5	
Progression Factor	1.00	1.00		1.00	1.00		1.00	1.00		1.00	1.00	
Incremental Delay, d2	102.1	0.2		85.2	3.4		2.8	0.2		1.9	0.3	
Delay (s)	141.7	4.6		125.0	11.2		38.5	34.7		37.3	34.8	
Level of Service	F	A		F	B		D	C		D	C	
Approach Delay (s)		10.3			13.1			37.0			35.9	
Approach LOS		B			B			D			D	

Intersection Summary			
HCM 2000 Control Delay	13.6	HCM 2000 Level of Service	B
HCM 2000 Volume to Capacity ratio	0.81		
Actuated Cycle Length (s)	82.1	Sum of lost time (s)	12.0
Intersection Capacity Utilization	61.0%	ICU Level of Service	B
Analysis Period (min)	15		
c Critical Lane Group			

Movement	EBL	EBT	EBR	WBL	WBT	WBR	NBL	NBT	NBR	SBL	SBT	SBR
Lane Configurations												
Traffic Volume (veh/h)	0	1230	10	0	1790	10	0	0	10	0	0	10
Future Volume (Veh/h)	0	1230	10	0	1790	10	0	0	10	0	0	10
Sign Control		Free			Free			Stop			Stop	
Grade		0%			0%			0%			0%	
Peak Hour Factor	1.00	1.00	1.00	1.00	1.00	1.00	1.00	1.00	1.00	1.00	1.00	1.00
Hourly flow rate (vph)	0	1230	10	0	1790	10	0	0	10	0	0	10
Pedestrians												
Lane Width (ft)												
Walking Speed (ft/s)												
Percent Blockage												
Right turn flare (veh)												
Median type		None			None							
Median storage veh)												
Upstream signal (ft)												
pX, platoon unblocked												
vC, conflicting volume	1800			1240			2140	3035	620	2420	3035	900
vC1, stage 1 conf vol												
vC2, stage 2 conf vol												
vCu, unblocked vol	1800			1240			2140	3035	620	2420	3035	900
tC, single (s)	4.1			4.1			7.5	6.5	6.9	7.5	6.5	6.9
tC, 2 stage (s)												
tF (s)	2.2			2.2			3.5	4.0	3.3	3.5	4.0	3.3
p0 queue free %	100			100			100	100	98	100	100	96
cM capacity (veh/h)	339			557			27	13	431	16	13	282

Direction, Lane #	EB 1	EB 2	WB 1	WB 2	NB 1	SB 1
Volume Total	820	420	1193	607	10	10
Volume Left	0	0	0	0	0	0
Volume Right	0	10	0	10	10	10
cSH	1700	1700	1700	1700	431	282
Volume to Capacity	0.48	0.25	0.70	0.36	0.02	0.04
Queue Length 95th (ft)	0	0	0	0	2	3
Control Delay (s)	0.0	0.0	0.0	0.0	13.6	18.3
Lane LOS					B	C
Approach Delay (s)	0.0		0.0		13.6	18.3
Approach LOS					B	C

Intersection Summary			
Average Delay	0.1		
Intersection Capacity Utilization	55.1%	ICU Level of Service	B
Analysis Period (min)	15		

Intersection	
Int Delay, s/veh	0.1

Movement	EBL	EBT	EBR	WBL	WBT	WBR	NBL	NBT	NBR	SBL	SBT	SBR
Traffic Vol, veh/h	0	1230	10	0	1790	10	0	0	10	0	0	10
Future Vol, veh/h	0	1230	10	0	1790	10	0	0	10	0	0	10
Conflicting Peds, #/hr	0	0	0	0	0	0	0	0	0	0	0	0
Sign Control	Free	Free	Free	Free	Free	Free	Stop	Stop	Stop	Stop	Stop	Stop
RT Channelized	-	-	None	-	-	None	-	-	None	-	-	None
Storage Length	-	-	-	-	-	-	-	-	0	-	-	0
Veh in Median Storage, #	-	0	-	-	0	-	-	0	-	-	0	-
Grade, %	-	0	-	-	0	-	-	0	-	-	0	-
Peak Hour Factor	100	100	100	100	100	100	100	100	100	100	100	100
Heavy Vehicles, %	2	2	2	2	2	2	2	2	2	2	2	2
Mvmt Flow	0	1230	10	0	1790	10	0	0	10	0	0	10

Major/Minor	Major1			Major2			Minor1			Minor2		
Conflicting Flow All	1800	0	0	1240	0	0	2130	3035	620	2410	3035	900
Stage 1	-	-	-	-	-	-	1235	1235	-	1795	1795	-
Stage 2	-	-	-	-	-	-	895	1800	-	615	1240	-
Critical Hdwy	4.14	-	-	4.14	-	-	7.54	6.54	6.94	7.54	6.54	6.94
Critical Hdwy Stg 1	-	-	-	-	-	-	6.54	5.54	-	6.54	5.54	-
Critical Hdwy Stg 2	-	-	-	-	-	-	6.54	5.54	-	6.54	5.54	-
Follow-up Hdwy	2.22	-	-	2.22	-	-	3.52	4.02	3.32	3.52	4.02	3.32
Pot Cap-1 Maneuver	339	-	-	557	-	-	28	13	431	17	13	282
Stage 1	-	-	-	-	-	-	187	247	-	83	131	-
Stage 2	-	-	-	-	-	-	302	130	-	445	245	-
Platoon blocked, %		-	-		-	-						
Mov Cap-1 Maneuver	339	-	-	557	-	-	27	13	431	17	13	282
Mov Cap-2 Maneuver	-	-	-	-	-	-	27	13	-	17	13	-
Stage 1	-	-	-	-	-	-	187	247	-	83	131	-
Stage 2	-	-	-	-	-	-	291	130	-	435	245	-

Approach	EB	WB	NB	SB
HCM Control Delay, s	0	0	13.6	18.2
HCM LOS			B	C

Minor Lane/Major Mvmt	NBLn1	EBL	EBT	EBR	WBL	WBT	WBR	SBLn1
Capacity (veh/h)	431	339	-	-	557	-	-	282
HCM Lane V/C Ratio	0.023	-	-	-	-	-	-	0.035
HCM Control Delay (s)	13.6	0	-	-	0	-	-	18.2
HCM Lane LOS	B	A	-	-	A	-	-	C
HCM 95th %tile Q(veh)	0.1	0	-	-	0	-	-	0.1

Movement	EBL	EBT	EBR	WBL	WBT	WBR	NBL	NBT	NBR	SBL	SBT	SBR
Lane Configurations												
Traffic Volume (veh/h)	0	1230	10	0	1760	10	0	0	10	0	0	30
Future Volume (Veh/h)	0	1230	10	0	1760	10	0	0	10	0	0	30
Sign Control		Free			Free			Stop			Stop	
Grade		0%			0%			0%			0%	
Peak Hour Factor	1.00	1.00	1.00	1.00	1.00	1.00	1.00	1.00	1.00	1.00	1.00	1.00
Hourly flow rate (vph)	0	1230	10	0	1760	10	0	0	10	0	0	30
Pedestrians												
Lane Width (ft)												
Walking Speed (ft/s)												
Percent Blockage												
Right turn flare (veh)												
Median type		None			None							
Median storage veh)												
Upstream signal (ft)												
pX, platoon unblocked												
vC, conflicting volume	1770			1240			2145	3005	620	2390	3005	885
vC1, stage 1 conf vol												
vC2, stage 2 conf vol												
vCu, unblocked vol	1770			1240			2145	3005	620	2390	3005	885
tC, single (s)	4.1			4.1			7.5	6.5	6.9	7.5	6.5	6.9
tC, 2 stage (s)												
tF (s)	2.2			2.2			3.5	4.0	3.3	3.5	4.0	3.3
p0 queue free %	100			100			100	100	98	100	100	90
cM capacity (veh/h)	348			557			25	13	431	17	13	288

Direction, Lane #	EB 1	EB 2	WB 1	WB 2	NB 1	SB 1
Volume Total	820	420	1173	597	10	30
Volume Left	0	0	0	0	0	0
Volume Right	0	10	0	10	10	30
cSH	1700	1700	1700	1700	431	288
Volume to Capacity	0.48	0.25	0.69	0.35	0.02	0.10
Queue Length 95th (ft)	0	0	0	0	2	9
Control Delay (s)	0.0	0.0	0.0	0.0	13.6	18.9
Lane LOS					B	C
Approach Delay (s)	0.0		0.0		13.6	18.9
Approach LOS					B	C

Intersection Summary			
Average Delay	0.2		
Intersection Capacity Utilization	54.3%	ICU Level of Service	A
Analysis Period (min)	15		

Intersection	
Int Delay, s/veh	0.2

Movement	EBL	EBT	EBR	WBL	WBT	WBR	NBL	NBT	NBR	SBL	SBT	SBR
Traffic Vol, veh/h	0	1230	10	0	1760	10	0	0	10	0	0	30
Future Vol, veh/h	0	1230	10	0	1760	10	0	0	10	0	0	30
Conflicting Peds, #/hr	0	0	0	0	0	0	0	0	0	0	0	0
Sign Control	Free	Free	Free	Free	Free	Free	Stop	Stop	Stop	Stop	Stop	Stop
RT Channelized	-	-	None	-	-	None	-	-	None	-	-	None
Storage Length	-	-	-	-	-	-	-	-	0	-	-	0
Veh in Median Storage, #	-	0	-	-	0	-	-	0	-	-	0	-
Grade, %	-	0	-	-	0	-	-	0	-	-	0	-
Peak Hour Factor	100	100	100	100	100	100	100	100	100	100	100	100
Heavy Vehicles, %	2	2	2	2	2	2	2	2	2	2	2	2
Mvmt Flow	0	1230	10	0	1760	10	0	0	10	0	0	30

Major/Minor	Major1			Major2			Minor1			Minor2		
Conflicting Flow All	1770	0	0	1240	0	0	2115	3005	620	2380	3005	885
Stage 1	-	-	-	-	-	-	1235	1235	-	1765	1765	-
Stage 2	-	-	-	-	-	-	880	1770	-	615	1240	-
Critical Hdwy	4.14	-	-	4.14	-	-	7.54	6.54	6.94	7.54	6.54	6.94
Critical Hdwy Stg 1	-	-	-	-	-	-	6.54	5.54	-	6.54	5.54	-
Critical Hdwy Stg 2	-	-	-	-	-	-	6.54	5.54	-	6.54	5.54	-
Follow-up Hdwy	2.22	-	-	2.22	-	-	3.52	4.02	3.32	3.52	4.02	3.32
Pot Cap-1 Maneuver	348	-	-	557	-	-	29	13	431	18	13	288
Stage 1	-	-	-	-	-	-	187	247	-	87	136	-
Stage 2	-	-	-	-	-	-	308	135	-	445	245	-
Platoon blocked, %		-	-		-	-						
Mov Cap-1 Maneuver	348	-	-	557	-	-	26	13	431	18	13	288
Mov Cap-2 Maneuver	-	-	-	-	-	-	26	13	-	18	13	-
Stage 1	-	-	-	-	-	-	187	247	-	87	136	-
Stage 2	-	-	-	-	-	-	276	135	-	435	245	-

Approach	EB	WB	NB	SB
HCM Control Delay, s	0	0	13.6	18.9
HCM LOS			B	C

Minor Lane/Major Mvmt	NBLn1	EBL	EBT	EBR	WBL	WBT	WBR	SBLn1
Capacity (veh/h)	431	348	-	-	557	-	-	288
HCM Lane V/C Ratio	0.023	-	-	-	-	-	-	0.104
HCM Control Delay (s)	13.6	0	-	-	0	-	-	18.9
HCM Lane LOS	B	A	-	-	A	-	-	C
HCM 95th %tile Q(veh)	0.1	0	-	-	0	-	-	0.3

Movement	EBL	EBT	EBR	WBL	WBT	WBR	NBL	NBT	NBR	SBL	SBT	SBR
Lane Configurations												
Traffic Volume (veh/h)	0	1240	10	0	1770	10	0	0	10	0	0	10
Future Volume (Veh/h)	0	1240	10	0	1770	10	0	0	10	0	0	10
Sign Control		Free			Free			Stop			Stop	
Grade		0%			0%			0%			0%	
Peak Hour Factor	1.00	1.00	1.00	1.00	1.00	1.00	1.00	1.00	1.00	1.00	1.00	1.00
Hourly flow rate (vph)	0	1240	10	0	1770	10	0	0	10	0	0	10
Pedestrians												
Lane Width (ft)												
Walking Speed (ft/s)												
Percent Blockage												
Right turn flare (veh)												
Median type		None			None							
Median storage veh)												
Upstream signal (ft)												
pX, platoon unblocked												
vC, conflicting volume	1780			1250			2140	3025	625	2405	3025	890
vC1, stage 1 conf vol												
vC2, stage 2 conf vol												
vCu, unblocked vol	1780			1250			2140	3025	625	2405	3025	890
tC, single (s)	4.1			4.1			7.5	6.5	6.9	7.5	6.5	6.9
tC, 2 stage (s)												
tF (s)	2.2			2.2			3.5	4.0	3.3	3.5	4.0	3.3
p0 queue free %	100			100			100	100	98	100	100	97
cM capacity (veh/h)	345			553			27	13	428	17	13	286

Direction, Lane #	EB 1	EB 2	WB 1	WB 2	NB 1	SB 1
Volume Total	827	423	1180	600	10	10
Volume Left	0	0	0	0	0	0
Volume Right	0	10	0	10	10	10
cSH	1700	1700	1700	1700	428	286
Volume to Capacity	0.49	0.25	0.69	0.35	0.02	0.03
Queue Length 95th (ft)	0	0	0	0	2	3
Control Delay (s)	0.0	0.0	0.0	0.0	13.6	18.0
Lane LOS					B	C
Approach Delay (s)	0.0		0.0		13.6	18.0
Approach LOS					B	C

Intersection Summary			
Average Delay	0.1		
Intersection Capacity Utilization	54.6%	ICU Level of Service	A
Analysis Period (min)	15		

Intersection	
Int Delay, s/veh	0.1

Movement	EBL	EBT	EBR	WBL	WBT	WBR	NBL	NBT	NBR	SBL	SBT	SBR
Traffic Vol, veh/h	0	1240	10	0	1770	10	0	0	10	0	0	10
Future Vol, veh/h	0	1240	10	0	1770	10	0	0	10	0	0	10
Conflicting Peds, #/hr	0	0	0	0	0	0	0	0	0	0	0	0
Sign Control	Free	Free	Free	Free	Free	Free	Stop	Stop	Stop	Stop	Stop	Stop
RT Channelized	-	-	None	-	-	None	-	-	None	-	-	None
Storage Length	-	-	-	-	-	-	-	-	0	-	-	0
Veh in Median Storage, #	-	0	-	-	0	-	-	0	-	-	0	-
Grade, %	-	0	-	-	0	-	-	0	-	-	0	-
Peak Hour Factor	100	100	100	100	100	100	100	100	100	100	100	100
Heavy Vehicles, %	2	2	2	2	2	2	2	2	2	2	2	2
Mvmt Flow	0	1240	10	0	1770	10	0	0	10	0	0	10

Major/Minor	Major1			Major2			Minor1			Minor2		
Conflicting Flow All	1780	0	0	1250	0	0	2130	3025	625	2395	3025	890
Stage 1	-	-	-	-	-	-	1245	1245	-	1775	1775	-
Stage 2	-	-	-	-	-	-	885	1780	-	620	1250	-
Critical Hdwy	4.14	-	-	4.14	-	-	7.54	6.54	6.94	7.54	6.54	6.94
Critical Hdwy Stg 1	-	-	-	-	-	-	6.54	5.54	-	6.54	5.54	-
Critical Hdwy Stg 2	-	-	-	-	-	-	6.54	5.54	-	6.54	5.54	-
Follow-up Hdwy	2.22	-	-	2.22	-	-	3.52	4.02	3.32	3.52	4.02	3.32
Pot Cap-1 Maneuver	345	-	-	553	-	-	28	13	428	18	13	286
Stage 1	-	-	-	-	-	-	184	244	-	86	134	-
Stage 2	-	-	-	-	-	-	306	133	-	442	243	-
Platoon blocked, %		-	-		-	-						
Mov Cap-1 Maneuver	345	-	-	553	-	-	27	13	428	18	13	286
Mov Cap-2 Maneuver	-	-	-	-	-	-	27	13	-	18	13	-
Stage 1	-	-	-	-	-	-	184	244	-	86	134	-
Stage 2	-	-	-	-	-	-	295	133	-	432	243	-

Approach	EB	WB	NB	SB
HCM Control Delay, s	0	0	13.6	18
HCM LOS			B	C

Minor Lane/Major Mvmt	NBLn1	EBL	EBT	EBR	WBL	WBT	WBR	SBLn1
Capacity (veh/h)	428	345	-	-	553	-	-	286
HCM Lane V/C Ratio	0.023	-	-	-	-	-	-	0.035
HCM Control Delay (s)	13.6	0	-	-	0	-	-	18
HCM Lane LOS	B	A	-	-	A	-	-	C
HCM 95th %tile Q(veh)	0.1	0	-	-	0	-	-	0.1

Movement	EBL	EBT	EBR	WBL	WBT	WBR	NBL	NBT	NBR	SBL	SBT	SBR
Lane Configurations												
Traffic Volume (veh/h)	0	1220	10	0	1760	20	0	0	10	0	0	20
Future Volume (Veh/h)	0	1220	10	0	1760	20	0	0	10	0	0	20
Sign Control		Free			Free			Stop			Stop	
Grade		0%			0%			0%			0%	
Peak Hour Factor	1.00	1.00	1.00	1.00	1.00	1.00	1.00	1.00	1.00	1.00	1.00	1.00
Hourly flow rate (vph)	0	1220	10	0	1760	20	0	0	10	0	0	20
Pedestrians												
Lane Width (ft)												
Walking Speed (ft/s)												
Percent Blockage												
Right turn flare (veh)												
Median type		None			None							
Median storage veh)												
Upstream signal (ft)												
pX, platoon unblocked												
vC, conflicting volume	1780			1230			2125	3005	615	2390	3000	890
vC1, stage 1 conf vol												
vC2, stage 2 conf vol												
vCu, unblocked vol	1780			1230			2125	3005	615	2390	3000	890
tC, single (s)	4.7			4.8			7.5	6.5	6.9	7.5	6.5	6.9
tC, 2 stage (s)												
tF (s)	2.5			2.6			3.5	4.0	3.3	3.5	4.0	3.3
p0 queue free %	100			100			100	100	98	100	100	93
cM capacity (veh/h)	249			406			26	13	434	17	13	286

Direction, Lane #	EB 1	EB 2	WB 1	WB 2	NB 1	SB 1
Volume Total	813	417	1173	607	10	20
Volume Left	0	0	0	0	0	0
Volume Right	0	10	0	20	10	20
cSH	1700	1700	1700	1700	434	286
Volume to Capacity	0.48	0.25	0.69	0.36	0.02	0.07
Queue Length 95th (ft)	0	0	0	0	2	6
Control Delay (s)	0.0	0.0	0.0	0.0	13.5	18.5
Lane LOS					B	C
Approach Delay (s)	0.0		0.0		13.5	18.5
Approach LOS					B	C

Intersection Summary			
Average Delay	0.2		
Intersection Capacity Utilization	54.6%	ICU Level of Service	A
Analysis Period (min)	15		

Intersection	
Int Delay, s/veh	0.2

Movement	EBL	EBT	EBR	WBL	WBT	WBR	NBL	NBT	NBR	SBL	SBT	SBR
Traffic Vol, veh/h	0	1220	10	0	1760	20	0	0	10	0	0	20
Future Vol, veh/h	0	1220	10	0	1760	20	0	0	10	0	0	20
Conflicting Peds, #/hr	0	0	0	0	0	0	0	0	0	0	0	0
Sign Control	Free	Free	Free	Free	Free	Free	Stop	Stop	Stop	Stop	Stop	Stop
RT Channelized	-	-	None	-	-	None	-	-	None	-	-	None
Storage Length	-	-	-	-	-	-	-	-	0	-	-	0
Veh in Median Storage, #	-	0	-	-	0	-	-	0	-	-	0	-
Grade, %	-	0	-	-	0	-	-	0	-	-	0	-
Peak Hour Factor	100	100	100	100	100	100	100	100	100	100	100	100
Heavy Vehicles, %	29	29	29	36	36	36	2	2	2	2	2	2
Mvmt Flow	0	1220	10	0	1760	20	0	0	10	0	0	20

Major/Minor	Major1			Major2			Minor1			Minor2		
Conflicting Flow All	1780	0	0	1230	0	0	2105	3005	615	2380	3000	890
Stage 1	-	-	-	-	-	-	1225	1225	-	1770	1770	-
Stage 2	-	-	-	-	-	-	880	1780	-	610	1230	-
Critical Hdwy	4.68	-	-	4.82	-	-	7.54	6.54	6.94	7.54	6.54	6.94
Critical Hdwy Stg 1	-	-	-	-	-	-	6.54	5.54	-	6.54	5.54	-
Critical Hdwy Stg 2	-	-	-	-	-	-	6.54	5.54	-	6.54	5.54	-
Follow-up Hdwy	2.49	-	-	2.56	-	-	3.52	4.02	3.32	3.52	4.02	3.32
Pot Cap-1 Maneuver	249	-	-	406	-	-	29	13	434	18	13	286
Stage 1	-	-	-	-	-	-	190	249	-	86	135	-
Stage 2	-	-	-	-	-	-	308	133	-	448	248	-
Platoon blocked, %		-	-		-	-						
Mov Cap-1 Maneuver	249	-	-	406	-	-	27	13	434	18	13	286
Mov Cap-2 Maneuver	-	-	-	-	-	-	27	13	-	18	13	-
Stage 1	-	-	-	-	-	-	190	249	-	86	135	-
Stage 2	-	-	-	-	-	-	286	133	-	438	248	-

Approach	EB	WB	NB	SB
HCM Control Delay, s	0	0	13.5	18.5
HCM LOS			B	C

Minor Lane/Major Mvmt	NBLn1	EBL	EBT	EBR	WBL	WBT	WBR	SBLn1
Capacity (veh/h)	434	249	-	-	406	-	-	286
HCM Lane V/C Ratio	0.023	-	-	-	-	-	-	0.07
HCM Control Delay (s)	13.5	0	-	-	0	-	-	18.5
HCM Lane LOS	B	A	-	-	A	-	-	C
HCM 95th %tile Q(veh)	0.1	0	-	-	0	-	-	0.2

Movement	EBL	EBT	EBR	WBL	WBT	WBR	NBL	NBT	NBR	SBL	SBT	SBR
Lane Configurations												
Traffic Volume (vph)	70	1140	30	90	1530	20	60	20	20	100	30	190
Future Volume (vph)	70	1140	30	90	1530	20	60	20	20	100	30	190
Ideal Flow (vphpl)	2100	2100	2100	2100	2100	2100	2100	2100	2100	2100	2100	2100
Total Lost time (s)	4.0	4.0	4.0	4.0	4.0	4.0	4.0	4.0		4.0	4.0	
Lane Util. Factor	0.97	0.95	1.00	1.00	0.95	1.00	1.00	1.00		1.00	1.00	
Frt	1.00	1.00	0.85	1.00	1.00	0.85	1.00	0.93		1.00	0.87	
Flt Protected	0.95	1.00	1.00	0.95	1.00	1.00	0.95	1.00		0.95	1.00	
Satd. Flow (prot)	3000	3093	1384	1467	2934	1312	1956	1904		1956	1792	
Flt Permitted	0.95	1.00	1.00	0.95	1.00	1.00	0.45	1.00		0.73	1.00	
Satd. Flow (perm)	3000	3093	1384	1467	2934	1312	922	1904		1505	1792	
Peak-hour factor, PHF	1.00	1.00	1.00	1.00	1.00	1.00	1.00	1.00	1.00	1.00	1.00	1.00
Adj. Flow (vph)	70	1140	30	90	1530	20	60	20	20	100	30	190
RTOR Reduction (vph)	0	0	14	0	0	8	0	16	0	0	116	0
Lane Group Flow (vph)	70	1140	16	90	1530	12	60	24	0	100	104	0
Heavy Vehicles (%)	29%	29%	29%	36%	36%	36%	2%	2%	2%	2%	2%	2%
Turn Type	Prot	NA	Perm	Prot	NA	Perm	Perm	NA		Perm	NA	
Protected Phases	7	4		3	8			2			6	
Permitted Phases			4			8	2			6		
Actuated Green, G (s)	4.4	43.6	43.6	8.3	47.5	47.5	17.6	17.6		17.6	17.6	
Effective Green, g (s)	4.4	43.6	43.6	8.3	47.5	47.5	17.6	17.6		17.6	17.6	
Actuated g/C Ratio	0.05	0.53	0.53	0.10	0.58	0.58	0.22	0.22		0.22	0.22	
Clearance Time (s)	4.0	4.0	4.0	4.0	4.0	4.0	4.0	4.0		4.0	4.0	
Vehicle Extension (s)	3.0	3.0	3.0	3.0	3.0	3.0	3.0	3.0		3.0	3.0	
Lane Grp Cap (vph)	161	1654	740	149	1710	764	199	411		325	386	
v/s Ratio Prot	0.02	0.37		c0.06	c0.52			0.01			0.06	
v/s Ratio Perm			0.01			0.01	0.07			c0.07		
v/c Ratio	0.43	0.69	0.02	0.60	0.89	0.02	0.30	0.06		0.31	0.27	
Uniform Delay, d1	37.3	14.0	8.9	35.0	14.8	7.2	26.8	25.4		26.8	26.6	
Progression Factor	1.00	1.00	1.00	1.00	1.00	1.00	1.00	1.00		1.00	1.00	
Incremental Delay, d2	1.9	1.2	0.0	6.7	6.5	0.0	3.9	0.3		2.4	1.7	
Delay (s)	39.2	15.2	8.9	41.8	21.3	7.2	30.7	25.6		29.3	28.3	
Level of Service	D	B	A	D	C	A	C	C		C	C	
Approach Delay (s)		16.4			22.3			28.7			28.6	
Approach LOS		B			C			C			C	

Intersection Summary			
HCM 2000 Control Delay	20.9	HCM 2000 Level of Service	C
HCM 2000 Volume to Capacity ratio	0.74		
Actuated Cycle Length (s)	81.5	Sum of lost time (s)	12.0
Intersection Capacity Utilization	70.3%	ICU Level of Service	C
Analysis Period (min)	15		
c Critical Lane Group			

Movement	EBL	EBT	EBR	WBL	WBT	WBR	NBL	NBT	NBR	SBL	SBT	SBR
Lane Configurations												
Traffic Volume (veh/h)	0	1090	220	0	1540	20	0	0	10	0	0	90
Future Volume (Veh/h)	0	1090	220	0	1540	20	0	0	10	0	0	90
Sign Control		Free			Free			Stop			Stop	
Grade		0%			0%			0%			0%	
Peak Hour Factor	1.00	1.00	1.00	1.00	1.00	1.00	1.00	1.00	1.00	1.00	1.00	1.00
Hourly flow rate (vph)	0	1090	220	0	1540	20	0	0	10	0	0	90
Pedestrians												
Lane Width (ft)												
Walking Speed (ft/s)												
Percent Blockage												
Right turn flare (veh)												
Median type		None			None							
Median storage veh)												
Upstream signal (ft)												
pX, platoon unblocked												
vC, conflicting volume	1560			1310			2060	2760	655	2105	2860	780
vC1, stage 1 conf vol												
vC2, stage 2 conf vol												
vCu, unblocked vol	1560			1310			2060	2760	655	2105	2860	780
tC, single (s)	4.6			4.8			7.5	6.5	6.9	7.5	6.5	6.9
tC, 2 stage (s)												
tF (s)	2.5			2.6			3.5	4.0	3.3	3.5	4.0	3.3
p0 queue free %	100			100			100	100	98	100	100	73
cM capacity (veh/h)	321			374			23	19	409	29	17	338

Direction, Lane #	EB 1	EB 2	WB 1	WB 2	NB 1	SB 1
Volume Total	727	583	1027	533	10	90
Volume Left	0	0	0	0	0	0
Volume Right	0	220	0	20	10	90
cSH	1700	1700	1700	1700	409	338
Volume to Capacity	0.43	0.34	0.60	0.31	0.02	0.27
Queue Length 95th (ft)	0	0	0	0	2	26
Control Delay (s)	0.0	0.0	0.0	0.0	14.0	19.5
Lane LOS					B	C
Approach Delay (s)	0.0		0.0		14.0	19.5
Approach LOS					B	C

Intersection Summary			
Average Delay	0.6		
Intersection Capacity Utilization	50.8%	ICU Level of Service	A
Analysis Period (min)	15		

Intersection	
Int Delay, s/veh	0.6

Movement	EBL	EBT	EBR	WBL	WBT	WBR	NBL	NBT	NBR	SBL	SBT	SBR
Traffic Vol, veh/h	0	1090	220	0	1540	20	0	0	10	0	0	90
Future Vol, veh/h	0	1090	220	0	1540	20	0	0	10	0	0	90
Conflicting Peds, #/hr	0	0	0	0	0	0	0	0	0	0	0	0
Sign Control	Free	Free	Free	Free	Free	Free	Stop	Stop	Stop	Stop	Stop	Stop
RT Channelized	-	-	None	-	-	None	-	-	None	-	-	None
Storage Length	-	-	-	-	-	-	-	-	0	-	-	0
Veh in Median Storage, #	-	0	-	-	0	-	-	0	-	-	0	-
Grade, %	-	0	-	-	0	-	-	0	-	-	0	-
Peak Hour Factor	100	100	100	100	100	100	100	100	100	100	100	100
Heavy Vehicles, %	26	26	26	36	36	36	2	2	2	2	2	2
Mvmt Flow	0	1090	220	0	1540	20	0	0	10	0	0	90

Major/Minor	Major1			Major2			Minor1			Minor2		
Conflicting Flow All	1560	0	0	1310	0	0	1970	2760	655	2095	2860	780
Stage 1	-	-	-	-	-	-	1200	1200	-	1550	1550	-
Stage 2	-	-	-	-	-	-	770	1560	-	545	1310	-
Critical Hdwy	4.62	-	-	4.82	-	-	7.54	6.54	6.94	7.54	6.54	6.94
Critical Hdwy Stg 1	-	-	-	-	-	-	6.54	5.54	-	6.54	5.54	-
Critical Hdwy Stg 2	-	-	-	-	-	-	6.54	5.54	-	6.54	5.54	-
Follow-up Hdwy	2.46	-	-	2.56	-	-	3.52	4.02	3.32	3.52	4.02	3.32
Pot Cap-1 Maneuver	321	-	-	374	-	-	37	19	409	30	17	338
Stage 1	-	-	-	-	-	-	196	256	-	119	173	-
Stage 2	-	-	-	-	-	-	359	171	-	490	227	-
Platoon blocked, %		-	-		-	-						
Mov Cap-1 Maneuver	321	-	-	374	-	-	27	19	409	29	17	338
Mov Cap-2 Maneuver	-	-	-	-	-	-	27	19	-	29	17	-
Stage 1	-	-	-	-	-	-	196	256	-	119	173	-
Stage 2	-	-	-	-	-	-	263	171	-	478	227	-

Approach	EB	WB	NB	SB
HCM Control Delay, s	0	0	14	19.5
HCM LOS			B	C

Minor Lane/Major Mvmt	NBLn1	EBL	EBT	EBR	WBL	WBT	WBR	SBLn1
Capacity (veh/h)	409	321	-	-	374	-	-	338
HCM Lane V/C Ratio	0.024	-	-	-	-	-	-	0.266
HCM Control Delay (s)	14	0	-	-	0	-	-	19.5
HCM Lane LOS	B	A	-	-	A	-	-	C
HCM 95th %tile Q(veh)	0.1	0	-	-	0	-	-	1.1

Movement	EBL	EBT	EBR	WBL	WBT	WBR	NBL	NBT	NBR	SBL	SBT	SBR
Lane Configurations												
Traffic Volume (veh/h)	0	1090	10	0	1560	10	0	0	10	0	0	10
Future Volume (Veh/h)	0	1090	10	0	1560	10	0	0	10	0	0	10
Sign Control		Free			Free			Stop			Stop	
Grade		0%			0%			0%			0%	
Peak Hour Factor	1.00	1.00	1.00	1.00	1.00	1.00	1.00	1.00	1.00	1.00	1.00	1.00
Hourly flow rate (vph)	0	1090	10	0	1560	10	0	0	10	0	0	10
Pedestrians												
Lane Width (ft)												
Walking Speed (ft/s)												
Percent Blockage												
Right turn flare (veh)												
Median type		None			None							
Median storage veh)												
Upstream signal (ft)												
pX, platoon unblocked												
vC, conflicting volume	1570			1100			1885	2665	550	2120	2665	785
vC1, stage 1 conf vol												
vC2, stage 2 conf vol												
vCu, unblocked vol	1570			1100			1885	2665	550	2120	2665	785
tC, single (s)	4.6			4.8			7.5	6.5	6.9	7.5	6.5	6.9
tC, 2 stage (s)												
tF (s)	2.5			2.6			3.5	4.0	3.3	3.5	4.0	3.3
p0 queue free %	100			100			100	100	98	100	100	97
cM capacity (veh/h)	318			465			42	22	479	28	22	336

Direction, Lane #	EB 1	EB 2	WB 1	WB 2	NB 1	SB 1
Volume Total	727	373	1040	530	10	10
Volume Left	0	0	0	0	0	0
Volume Right	0	10	0	10	10	10
cSH	1700	1700	1700	1700	479	336
Volume to Capacity	0.43	0.22	0.61	0.31	0.02	0.03
Queue Length 95th (ft)	0	0	0	0	2	2
Control Delay (s)	0.0	0.0	0.0	0.0	12.7	16.1
Lane LOS					B	C
Approach Delay (s)	0.0		0.0		12.7	16.1
Approach LOS					B	C

Intersection Summary			
Average Delay	0.1		
Intersection Capacity Utilization	49.3%	ICU Level of Service	A
Analysis Period (min)	15		

Intersection	
Int Delay, s/veh	0.1

Movement	EBL	EBT	EBR	WBL	WBT	WBR	NBL	NBT	NBR	SBL	SBT	SBR
Traffic Vol, veh/h	0	1090	10	0	1560	10	0	0	10	0	0	10
Future Vol, veh/h	0	1090	10	0	1560	10	0	0	10	0	0	10
Conflicting Peds, #/hr	0	0	0	0	0	0	0	0	0	0	0	0
Sign Control	Free	Free	Free	Free	Free	Free	Stop	Stop	Stop	Stop	Stop	Stop
RT Channelized	-	-	None	-	-	None	-	-	None	-	-	None
Storage Length	-	-	-	-	-	-	-	-	0	-	-	0
Veh in Median Storage, #	-	0	-	-	0	-	-	0	-	-	0	-
Grade, %	-	0	-	-	0	-	-	0	-	-	0	-
Peak Hour Factor	100	100	100	100	100	100	100	100	100	100	100	100
Heavy Vehicles, %	26	26	26	36	36	36	2	2	2	2	2	2
Mvmt Flow	0	1090	10	0	1560	10	0	0	10	0	0	10

Major/Minor	Major1			Major2			Minor1			Minor2		
Conflicting Flow All	1570	0	0	1100	0	0	1875	2665	550	2110	2665	785
Stage 1	-	-	-	-	-	-	1095	1095	-	1565	1565	-
Stage 2	-	-	-	-	-	-	780	1570	-	545	1100	-
Critical Hdwy	4.62	-	-	4.82	-	-	7.54	6.54	6.94	7.54	6.54	6.94
Critical Hdwy Stg 1	-	-	-	-	-	-	6.54	5.54	-	6.54	5.54	-
Critical Hdwy Stg 2	-	-	-	-	-	-	6.54	5.54	-	6.54	5.54	-
Follow-up Hdwy	2.46	-	-	2.56	-	-	3.52	4.02	3.32	3.52	4.02	3.32
Pot Cap-1 Maneuver	318	-	-	465	-	-	44	22	479	29	22	336
Stage 1	-	-	-	-	-	-	228	288	-	116	170	-
Stage 2	-	-	-	-	-	-	354	170	-	490	286	-
Platoon blocked, %		-	-		-	-						
Mov Cap-1 Maneuver	318	-	-	465	-	-	43	22	479	28	22	336
Mov Cap-2 Maneuver	-	-	-	-	-	-	43	22	-	28	22	-
Stage 1	-	-	-	-	-	-	228	288	-	116	170	-
Stage 2	-	-	-	-	-	-	343	170	-	480	286	-

Approach	EB	WB	NB	SB
HCM Control Delay, s	0	0	12.7	16
HCM LOS			B	C

Minor Lane/Major Mvmt	NBLn1	EBL	EBT	EBR	WBL	WBT	WBR	SBLn1
Capacity (veh/h)	479	318	-	-	465	-	-	336
HCM Lane V/C Ratio	0.021	-	-	-	-	-	-	0.03
HCM Control Delay (s)	12.7	0	-	-	0	-	-	16
HCM Lane LOS	B	A	-	-	A	-	-	C
HCM 95th %tile Q(veh)	0.1	0	-	-	0	-	-	0.1

Movement	EBL	EBT	EBR	WBL	WBT	WBR	NBL	NBT	NBR	SBL	SBT	SBR
Lane Configurations												
Traffic Volume (vph)	30	1060	30	10	1390	20	100	30	10	50	60	80
Future Volume (vph)	30	1060	30	10	1390	20	100	30	10	50	60	80
Ideal Flow (vphpl)	2100	2100	2100	2100	2100	2100	2100	2100	2100	2100	2100	2100
Total Lost time (s)	4.0	4.0	4.0	4.0	4.0	4.0	4.0	4.0		4.0	4.0	4.0
Lane Util. Factor	1.00	0.95	1.00	1.00	0.95	1.00	1.00	1.00		1.00	1.00	1.00
Frt	1.00	1.00	0.85	1.00	1.00	0.85	1.00	0.96		1.00	1.00	0.85
Flt Protected	0.95	1.00	1.00	0.95	1.00	1.00	0.95	1.00		0.95	1.00	1.00
Satd. Flow (prot)	1583	3167	1417	1467	2934	1312	1956	1982		1956	2059	1750
Flt Permitted	0.95	1.00	1.00	0.95	1.00	1.00	0.72	1.00		0.73	1.00	1.00
Satd. Flow (perm)	1583	3167	1417	1467	2934	1312	1478	1982		1505	2059	1750
Peak-hour factor, PHF	1.00	1.00	1.00	1.00	1.00	1.00	1.00	1.00	1.00	1.00	1.00	1.00
Adj. Flow (vph)	30	1060	30	10	1390	20	100	30	10	50	60	80
RTOR Reduction (vph)	0	0	14	0	0	9	0	7	0	0	0	60
Lane Group Flow (vph)	30	1060	16	10	1390	11	100	33	0	50	60	20
Heavy Vehicles (%)	26%	26%	26%	36%	36%	36%	2%	2%	2%	2%	2%	2%
Turn Type	Prot	NA	Perm	Prot	NA	Perm	Perm	NA		Perm	NA	Perm
Protected Phases	7	4		3	8			2			6	
Permitted Phases			4			8	2			6		6
Actuated Green, G (s)	1.4	34.7	34.7	0.7	34.0	34.0	16.3	16.3		16.3	16.3	16.3
Effective Green, g (s)	1.4	34.7	34.7	0.7	34.0	34.0	16.3	16.3		16.3	16.3	16.3
Actuated g/C Ratio	0.02	0.54	0.54	0.01	0.53	0.53	0.26	0.26		0.26	0.26	0.26
Clearance Time (s)	4.0	4.0	4.0	4.0	4.0	4.0	4.0	4.0		4.0	4.0	4.0
Vehicle Extension (s)	3.0	3.0	3.0	3.0	3.0	3.0	3.0	3.0		3.0	3.0	3.0
Lane Grp Cap (vph)	34	1725	771	16	1566	700	378	507		385	526	447
v/s Ratio Prot	c0.02	0.33		0.01	c0.47			0.02			0.03	
v/s Ratio Perm			0.01			0.01	c0.07			0.03		0.01
v/c Ratio	0.88	0.61	0.02	0.62	0.89	0.02	0.26	0.06		0.13	0.11	0.05
Uniform Delay, d1	31.1	9.9	6.7	31.4	13.2	7.0	18.9	17.9		18.2	18.2	17.8
Progression Factor	1.00	1.00	1.00	1.00	1.00	1.00	1.00	1.00		1.00	1.00	1.00
Incremental Delay, d2	106.5	0.7	0.0	57.6	6.5	0.0	1.7	0.2		0.7	0.4	0.2
Delay (s)	137.6	10.6	6.7	89.0	19.7	7.0	20.6	18.2		18.9	18.6	18.0
Level of Service	F	B	A	F	B	A	C	B		B	B	B
Approach Delay (s)		13.9			20.0			19.9			18.5	
Approach LOS		B			B			B			B	

Intersection Summary			
HCM 2000 Control Delay	17.5	HCM 2000 Level of Service	B
HCM 2000 Volume to Capacity ratio	0.69		
Actuated Cycle Length (s)	63.7	Sum of lost time (s)	12.0
Intersection Capacity Utilization	54.3%	ICU Level of Service	A
Analysis Period (min)	15		
c Critical Lane Group			

Movement	EBL	EBT	EBR	WBL	WBT	WBR	NBL	NBT	NBR	SBL	SBT	SBR
Lane Configurations												
Traffic Volume (veh/h)	0	1110	10	0	1390	20	0	0	10	0	0	10
Future Volume (Veh/h)	0	1110	10	0	1390	20	0	0	10	0	0	10
Sign Control		Free			Free			Stop			Stop	
Grade		0%			0%			0%			0%	
Peak Hour Factor	1.00	1.00	1.00	1.00	1.00	1.00	1.00	1.00	1.00	1.00	1.00	1.00
Hourly flow rate (vph)	0	1110	10	0	1390	20	0	0	10	0	0	10
Pedestrians												
Lane Width (ft)												
Walking Speed (ft/s)												
Percent Blockage												
Right turn flare (veh)												
Median type		None			None							
Median storage veh)												
Upstream signal (ft)												
pX, platoon unblocked												
vC, conflicting volume	1410			1120			1820	2525	560	1965	2520	705
vC1, stage 1 conf vol												
vC2, stage 2 conf vol												
vCu, unblocked vol	1410			1120			1820	2525	560	1965	2520	705
tC, single (s)	4.1			4.1			7.5	6.5	6.9	7.5	6.5	6.9
tC, 2 stage (s)												
tF (s)	2.2			2.2			3.5	4.0	3.3	3.5	4.0	3.3
p0 queue free %	100			100			100	100	98	100	100	97
cM capacity (veh/h)	480			619			47	27	472	37	28	379

Direction, Lane #	EB 1	EB 2	WB 1	WB 2	NB 1	SB 1
Volume Total	740	380	927	483	10	10
Volume Left	0	0	0	0	0	0
Volume Right	0	10	0	20	10	10
cSH	1700	1700	1700	1700	472	379
Volume to Capacity	0.44	0.22	0.55	0.28	0.02	0.03
Queue Length 95th (ft)	0	0	0	0	2	2
Control Delay (s)	0.0	0.0	0.0	0.0	12.8	14.8
Lane LOS					B	B
Approach Delay (s)	0.0		0.0		12.8	14.8
Approach LOS					B	B

Intersection Summary			
Average Delay	0.1		
Intersection Capacity Utilization	45.3%	ICU Level of Service	A
Analysis Period (min)	15		

Intersection	
Int Delay, s/veh	0.1

Movement	EBL	EBT	EBR	WBL	WBT	WBR	NBL	NBT	NBR	SBL	SBT	SBR
Traffic Vol, veh/h	0	1110	10	0	1390	20	0	0	10	0	0	10
Future Vol, veh/h	0	1110	10	0	1390	20	0	0	10	0	0	10
Conflicting Peds, #/hr	0	0	0	0	0	0	0	0	0	0	0	0
Sign Control	Free	Free	Free	Free	Free	Free	Stop	Stop	Stop	Stop	Stop	Stop
RT Channelized	-	-	None	-	-	None	-	-	None	-	-	None
Storage Length	-	-	-	-	-	-	-	-	0	-	-	0
Veh in Median Storage, #	-	0	-	-	0	-	-	0	-	-	0	-
Grade, %	-	0	-	-	0	-	-	0	-	-	0	-
Peak Hour Factor	100	100	100	100	100	100	100	100	100	100	100	100
Heavy Vehicles, %	2	2	2	2	2	2	2	2	2	2	2	2
Mvmt Flow	0	1110	10	0	1390	20	0	0	10	0	0	10

Major/Minor	Major1			Major2			Minor1			Minor2		
Conflicting Flow All	1410	0	0	1120	0	0	1810	2525	560	1955	2520	705
Stage 1	-	-	-	-	-	-	1115	1115	-	1400	1400	-
Stage 2	-	-	-	-	-	-	695	1410	-	555	1120	-
Critical Hdwy	4.14	-	-	4.14	-	-	7.54	6.54	6.94	7.54	6.54	6.94
Critical Hdwy Stg 1	-	-	-	-	-	-	6.54	5.54	-	6.54	5.54	-
Critical Hdwy Stg 2	-	-	-	-	-	-	6.54	5.54	-	6.54	5.54	-
Follow-up Hdwy	2.22	-	-	2.22	-	-	3.52	4.02	3.32	3.52	4.02	3.32
Pot Cap-1 Maneuver	480	-	-	619	-	-	49	27	472	38	28	379
Stage 1	-	-	-	-	-	-	222	282	-	148	205	-
Stage 2	-	-	-	-	-	-	399	203	-	484	280	-
Platoon blocked, %		-	-		-	-						
Mov Cap-1 Maneuver	480	-	-	619	-	-	48	27	472	37	28	379
Mov Cap-2 Maneuver	-	-	-	-	-	-	48	27	-	37	28	-
Stage 1	-	-	-	-	-	-	222	282	-	148	205	-
Stage 2	-	-	-	-	-	-	388	203	-	474	280	-

Approach	EB	WB	NB	SB
HCM Control Delay, s	0	0	12.8	14.8
HCM LOS			B	B

Minor Lane/Major Mvmt	NBLn1	EBL	EBT	EBR	WBL	WBT	WBR	SBLn1
Capacity (veh/h)	472	480	-	-	619	-	-	379
HCM Lane V/C Ratio	0.021	-	-	-	-	-	-	0.026
HCM Control Delay (s)	12.8	0	-	-	0	-	-	14.8
HCM Lane LOS	B	A	-	-	A	-	-	B
HCM 95th %tile Q(veh)	0.1	0	-	-	0	-	-	0.1

Movement	EBL	EBT	EBR	WBL	WBT	WBR	NBL	NBT	NBR	SBL	SBT	SBR
Lane Configurations												
Traffic Volume (veh/h)	0	1110	10	0	1390	10	0	0	10	0	0	20
Future Volume (Veh/h)	0	1110	10	0	1390	10	0	0	10	0	0	20
Sign Control		Free			Free			Stop			Stop	
Grade		0%			0%			0%			0%	
Peak Hour Factor	1.00	1.00	1.00	1.00	1.00	1.00	1.00	1.00	1.00	1.00	1.00	1.00
Hourly flow rate (vph)	0	1110	10	0	1390	10	0	0	10	0	0	20
Pedestrians												
Lane Width (ft)												
Walking Speed (ft/s)												
Percent Blockage												
Right turn flare (veh)												
Median type		None			None							
Median storage veh)												
Upstream signal (ft)												
pX, platoon unblocked												
vC, conflicting volume	1400			1120			1830	2515	560	1960	2515	700
vC1, stage 1 conf vol												
vC2, stage 2 conf vol												
vCu, unblocked vol	1400			1120			1830	2515	560	1960	2515	700
tC, single (s)	4.6			4.8			7.5	6.5	6.9	7.5	6.5	6.9
tC, 2 stage (s)												
tF (s)	2.5			2.6			3.5	4.0	3.3	3.5	4.0	3.3
p0 queue free %	100			100			100	100	98	100	100	95
cM capacity (veh/h)	377			455			45	28	472	37	28	382

Direction, Lane #	EB 1	EB 2	WB 1	WB 2	NB 1	SB 1
Volume Total	740	380	927	473	10	20
Volume Left	0	0	0	0	0	0
Volume Right	0	10	0	10	10	20
cSH	1700	1700	1700	1700	472	382
Volume to Capacity	0.44	0.22	0.55	0.28	0.02	0.05
Queue Length 95th (ft)	0	0	0	0	2	4
Control Delay (s)	0.0	0.0	0.0	0.0	12.8	15.0
Lane LOS					B	B
Approach Delay (s)	0.0		0.0		12.8	15.0
Approach LOS					B	B

Intersection Summary			
Average Delay	0.2		
Intersection Capacity Utilization	45.1%	ICU Level of Service	A
Analysis Period (min)	15		

Intersection	
Int Delay, s/veh	0.2

Movement	EBL	EBT	EBR	WBL	WBT	WBR	NBL	NBT	NBR	SBL	SBT	SBR
Traffic Vol, veh/h	0	1110	10	0	1390	10	0	0	10	0	0	20
Future Vol, veh/h	0	1110	10	0	1390	10	0	0	10	0	0	20
Conflicting Peds, #/hr	0	0	0	0	0	0	0	0	0	0	0	0
Sign Control	Free	Free	Free	Free	Free	Free	Stop	Stop	Stop	Stop	Stop	Stop
RT Channelized	-	-	None	-	-	None	-	-	None	-	-	None
Storage Length	-	-	-	-	-	-	-	-	0	-	-	0
Veh in Median Storage, #	-	0	-	-	0	-	-	0	-	-	0	-
Grade, %	-	0	-	-	0	-	-	0	-	-	0	-
Peak Hour Factor	100	100	100	100	100	100	100	100	100	100	100	100
Heavy Vehicles, %	26	26	26	36	36	36	2	2	2	2	2	2
Mvmt Flow	0	1110	10	0	1390	10	0	0	10	0	0	20

Major/Minor	Major1			Major2			Minor1			Minor2		
Conflicting Flow All	1400	0	0	1120	0	0	1810	2515	560	1950	2515	700
Stage 1	-	-	-	-	-	-	1115	1115	-	1395	1395	-
Stage 2	-	-	-	-	-	-	695	1400	-	555	1120	-
Critical Hdwy	4.62	-	-	4.82	-	-	7.54	6.54	6.94	7.54	6.54	6.94
Critical Hdwy Stg 1	-	-	-	-	-	-	6.54	5.54	-	6.54	5.54	-
Critical Hdwy Stg 2	-	-	-	-	-	-	6.54	5.54	-	6.54	5.54	-
Follow-up Hdwy	2.46	-	-	2.56	-	-	3.52	4.02	3.32	3.52	4.02	3.32
Pot Cap-1 Maneuver	377	-	-	455	-	-	49	28	472	39	28	382
Stage 1	-	-	-	-	-	-	222	282	-	149	207	-
Stage 2	-	-	-	-	-	-	399	205	-	484	280	-
Platoon blocked, %		-	-		-	-						
Mov Cap-1 Maneuver	377	-	-	455	-	-	46	28	472	38	28	382
Mov Cap-2 Maneuver	-	-	-	-	-	-	46	28	-	38	28	-
Stage 1	-	-	-	-	-	-	222	282	-	149	207	-
Stage 2	-	-	-	-	-	-	378	205	-	474	280	-

Approach	EB	WB	NB	SB
HCM Control Delay, s	0	0	12.8	14.9
HCM LOS			B	B

Minor Lane/Major Mvmt	NBLn1	EBL	EBT	EBR	WBL	WBT	WBR	SBLn1
Capacity (veh/h)	472	377	-	-	455	-	-	382
HCM Lane V/C Ratio	0.021	-	-	-	-	-	-	0.052
HCM Control Delay (s)	12.8	0	-	-	0	-	-	14.9
HCM Lane LOS	B	A	-	-	A	-	-	B
HCM 95th %tile Q(veh)	0.1	0	-	-	0	-	-	0.2

Movement	EBL	EBT	EBR	WBL	WBT	WBR	NBL	NBT	NBR	SBL	SBT	SBR
Lane Configurations												
Traffic Volume (vph)	0	310	800	30	980	0	0	0	0	20	0	440
Future Volume (vph)	0	310	800	30	980	0	0	0	0	20	0	440
Ideal Flow (vphpl)	2100	2100	2100	2100	2100	2100	2100	2100	2100	2100	2100	2100
Total Lost time (s)		4.0	4.0	4.0	4.0						4.0	4.0
Lane Util. Factor		0.95	1.00	1.00	0.95						1.00	1.00
Frt		1.00	0.85	1.00	1.00						1.00	0.85
Flt Protected		1.00	1.00	0.95	1.00						0.95	1.00
Satd. Flow (prot)		2891	1293	1385	2771						1446	1240
Flt Permitted		1.00	1.00	0.95	1.00						0.95	1.00
Satd. Flow (perm)		2891	1293	1385	2771						1446	1240
Peak-hour factor, PHF	1.00	1.00	1.00	1.00	1.00	1.00	1.00	1.00	1.00	1.00	1.00	1.00
Adj. Flow (vph)	0	310	800	30	980	0	0	0	0	20	0	440
RTOR Reduction (vph)	0	0	497	0	0	0	0	0	0	0	0	64
Lane Group Flow (vph)	0	310	303	30	980	0	0	0	0	0	20	376
Heavy Vehicles (%)	38%	38%	38%	44%	44%	44%	2%	2%	2%	38%	2%	44%
Turn Type		NA	Perm	Prot	NA					Perm	NA	Perm
Protected Phases		4		3	8						6	
Permitted Phases			4							6		6
Actuated Green, G (s)		19.1	19.1	1.4	24.5						18.0	18.0
Effective Green, g (s)		19.1	19.1	1.4	24.5						18.0	18.0
Actuated g/C Ratio		0.38	0.38	0.03	0.49						0.36	0.36
Clearance Time (s)		4.0	4.0	4.0	4.0						4.0	4.0
Vehicle Extension (s)		3.0	3.0	3.0	3.0						3.0	3.0
Lane Grp Cap (vph)		1093	489	38	1344						515	441
v/s Ratio Prot		0.11		0.02	c0.35							
v/s Ratio Perm			0.23								0.01	c0.30
v/c Ratio		0.28	0.62	0.79	0.73						0.04	0.85
Uniform Delay, d1		10.9	12.7	24.4	10.4						10.6	15.0
Progression Factor		1.00	1.00	1.00	1.00						1.00	1.00
Incremental Delay, d2		0.1	2.3	67.6	2.0						0.0	14.7
Delay (s)		11.1	15.1	92.0	12.4						10.6	29.8
Level of Service		B	B	F	B						B	C
Approach Delay (s)		14.0			14.7			0.0			28.9	
Approach LOS		B			B			A			C	

Intersection Summary			
HCM 2000 Control Delay	16.9	HCM 2000 Level of Service	B
HCM 2000 Volume to Capacity ratio	0.86		
Actuated Cycle Length (s)	50.5	Sum of lost time (s)	12.0
Intersection Capacity Utilization	61.5%	ICU Level of Service	B
Analysis Period (min)	15		
c Critical Lane Group			

Movement	EBL	EBT	EBR	WBL	WBT	WBR	NBL	NBT	NBR	SBL	SBT	SBR
Lane Configurations												
Traffic Volume (vph)	0	100	230	0	250	20	750	0	10	0	0	0
Future Volume (vph)	0	100	230	0	250	20	750	0	10	0	0	0
Ideal Flow (vphpl)	2100	2100	2100	2100	2100	2100	2100	2100	2100	2100	2100	2100
Total Lost time (s)		4.0	4.0		4.0		4.0		4.0			
Lane Util. Factor		0.95	1.00		0.95		1.00		1.00			
Frt		1.00	0.85		0.99		1.00		0.85			
Flt Protected		1.00	1.00		1.00		0.95		1.00			
Satd. Flow (prot)		2891	1293		2740		1385		1750			
Flt Permitted		1.00	1.00		1.00		0.95		1.00			
Satd. Flow (perm)		2891	1293		2740		1385		1750			
Peak-hour factor, PHF	1.00	1.00	1.00	1.00	1.00	1.00	1.00	1.00	1.00	1.00	1.00	1.00
Adj. Flow (vph)	0	100	230	0	250	20	750	0	10	0	0	0
RTOR Reduction (vph)	0	0	183	0	9	0	0	0	4	0	0	0
Lane Group Flow (vph)	0	100	47	0	261	0	750	0	6	0	0	0
Heavy Vehicles (%)	38%	38%	38%	44%	44%	44%	44%	2%	2%	2%	2%	2%
Parking (#/hr)											0	
Turn Type		NA	Perm		NA		Prot		Perm			
Protected Phases		4			8		5					
Permitted Phases			4						2			
Actuated Green, G (s)		10.9	10.9		10.9		34.0		34.0			
Effective Green, g (s)		10.9	10.9		10.9		34.0		34.0			
Actuated g/C Ratio		0.21	0.21		0.21		0.64		0.64			
Clearance Time (s)		4.0	4.0		4.0		4.0		4.0			
Vehicle Extension (s)		3.0	3.0		3.0		3.0		3.0			
Lane Grp Cap (vph)		595	266		564		890		1124			
v/s Ratio Prot		0.03			c0.10		c0.54					
v/s Ratio Perm			0.04						0.00			
v/c Ratio		0.17	0.18		0.46		0.84		0.01			
Uniform Delay, d1		17.3	17.3		18.4		7.4		3.4			
Progression Factor		1.00	1.00		1.00		1.00		1.00			
Incremental Delay, d2		0.1	0.3		0.6		7.3		0.0			
Delay (s)		17.4	17.6		19.0		14.7		3.4			
Level of Service		B	B		B		B		A			
Approach Delay (s)		17.6			19.0			14.5			0.0	
Approach LOS		B			B			B			A	

Intersection Summary			
HCM 2000 Control Delay	16.2	HCM 2000 Level of Service	B
HCM 2000 Volume to Capacity ratio	0.75		
Actuated Cycle Length (s)	52.9	Sum of lost time (s)	8.0
Intersection Capacity Utilization	51.1%	ICU Level of Service	A
Analysis Period (min)	15		

c Critical Lane Group

Movement	EBL	EBT	WBT	WBR	SBL	SBR
Lane Configurations						
Traffic Volume (vph)	510	2590	1940	240	130	240
Future Volume (vph)	510	2590	1940	240	130	240
Ideal Flow (vphpl)	2100	2100	2100	2100	2100	2100
Total Lost time (s)	4.0	4.0	4.0		4.0	4.0
Lane Util. Factor	0.97	0.91	0.91		1.00	1.00
Frt	1.00	1.00	0.98		1.00	0.85
Flt Protected	0.95	1.00	1.00		0.95	1.00
Satd. Flow (prot)	3794	5621	5528		1956	1750
Flt Permitted	0.95	1.00	1.00		0.95	1.00
Satd. Flow (perm)	3794	5621	5528		1956	1750
Peak-hour factor, PHF	1.00	1.00	1.00	1.00	1.00	1.00
Adj. Flow (vph)	510	2590	1940	240	130	240
RTOR Reduction (vph)	0	0	14	0	0	98
Lane Group Flow (vph)	510	2590	2166	0	130	142
Turn Type	Prot	NA	NA		Perm	Perm
Protected Phases	7	4	8			
Permitted Phases					6	6
Actuated Green, G (s)	6.2	50.9	40.7		11.5	11.5
Effective Green, g (s)	6.2	50.9	40.7		11.5	11.5
Actuated g/C Ratio	0.09	0.72	0.58		0.16	0.16
Clearance Time (s)	4.0	4.0	4.0		4.0	4.0
Vehicle Extension (s)	3.0	3.0	3.0		3.0	3.0
Lane Grp Cap (vph)	334	4064	3195		319	285
v/s Ratio Prot	c0.13	0.46	c0.39			
v/s Ratio Perm					0.07	c0.08
v/c Ratio	1.53	0.64	0.68		0.41	0.50
Uniform Delay, d1	32.1	5.0	10.3		26.4	26.8
Progression Factor	1.00	1.00	1.00		1.00	1.00
Incremental Delay, d2	251.8	0.3	0.6		0.9	1.4
Delay (s)	283.9	5.3	10.9		27.2	28.2
Level of Service	F	A	B		C	C
Approach Delay (s)		51.2	10.9		27.9	
Approach LOS		D	B		C	

Intersection Summary			
HCM 2000 Control Delay	34.1	HCM 2000 Level of Service	C
HCM 2000 Volume to Capacity ratio	0.73		
Actuated Cycle Length (s)	70.4	Sum of lost time (s)	12.0
Intersection Capacity Utilization	68.4%	ICU Level of Service	C
Analysis Period (min)	15		

c Critical Lane Group

Movement	EBL	EBT	EBR	WBL	WBT	WBR	NBL	NBT	NBR	SBL	SBT	SBR
Lane Configurations												
Traffic Volume (vph)	290	2350	80	50	1950	420	90	60	100	120	20	150
Future Volume (vph)	290	2350	80	50	1950	420	90	60	100	120	20	150
Ideal Flow (vphpl)	2100	2100	2100	2100	2100	2100	2100	2100	2100	2100	2100	2100
Total Lost time (s)	4.0	4.0	4.0	4.0	4.0	4.0	4.0	4.0		4.0	4.0	
Lane Util. Factor	0.97	0.91	1.00	1.00	0.91	1.00	1.00	1.00		1.00	1.00	
Frt	1.00	1.00	0.85	1.00	1.00	0.85	1.00	0.91		1.00	0.87	
Flt Protected	0.95	1.00	1.00	0.95	1.00	1.00	0.95	1.00		0.95	1.00	
Satd. Flow (prot)	3794	5621	1750	1956	5621	1750	1956	1866		1956	1786	
Flt Permitted	0.95	1.00	1.00	0.95	1.00	1.00	0.60	1.00		0.61	1.00	
Satd. Flow (perm)	3794	5621	1750	1956	5621	1750	1227	1866		1265	1786	
Peak-hour factor, PHF	1.00	1.00	1.00	1.00	1.00	1.00	1.00	1.00	1.00	1.00	1.00	1.00
Adj. Flow (vph)	290	2350	80	50	1950	420	90	60	100	120	20	150
RTOR Reduction (vph)	0	0	40	0	0	214	0	75	0	0	112	0
Lane Group Flow (vph)	290	2350	40	50	1950	206	90	85	0	120	58	0
Turn Type	Prot	NA	Perm	Prot	NA	Perm	Perm	NA		Perm	NA	
Protected Phases	7	4		3	8			2			6	
Permitted Phases			4			8	2			6		
Actuated Green, G (s)	6.0	35.7	35.7	4.9	34.6	34.6	18.0	18.0		18.0	18.0	
Effective Green, g (s)	6.0	35.7	35.7	4.9	34.6	34.6	18.0	18.0		18.0	18.0	
Actuated g/C Ratio	0.08	0.51	0.51	0.07	0.49	0.49	0.25	0.25		0.25	0.25	
Clearance Time (s)	4.0	4.0	4.0	4.0	4.0	4.0	4.0	4.0		4.0	4.0	
Vehicle Extension (s)	3.0	3.0	3.0	3.0	3.0	3.0	3.0	3.0		3.0	3.0	
Lane Grp Cap (vph)	322	2842	884	135	2754	857	312	475		322	455	
v/s Ratio Prot	c0.08	c0.42		0.03	0.35			0.05			0.03	
v/s Ratio Perm			0.02			0.12	0.07			c0.09		
v/c Ratio	0.90	0.83	0.05	0.37	0.71	0.24	0.29	0.18		0.37	0.13	
Uniform Delay, d1	32.0	14.8	8.8	31.4	14.1	10.4	21.2	20.5		21.7	20.3	
Progression Factor	1.00	1.00	1.00	1.00	1.00	1.00	1.00	1.00		1.00	1.00	
Incremental Delay, d2	26.7	2.1	0.0	1.7	0.9	0.1	2.3	0.8		3.3	0.6	
Delay (s)	58.7	16.9	8.9	33.1	14.9	10.5	23.5	21.4		24.9	20.8	
Level of Service	E	B	A	C	B	B	C	C		C	C	
Approach Delay (s)		21.1			14.5			22.1			22.5	
Approach LOS		C			B			C			C	

Intersection Summary			
HCM 2000 Control Delay	18.4	HCM 2000 Level of Service	B
HCM 2000 Volume to Capacity ratio	0.71		
Actuated Cycle Length (s)	70.6	Sum of lost time (s)	12.0
Intersection Capacity Utilization	72.2%	ICU Level of Service	C
Analysis Period (min)	15		

c Critical Lane Group

Movement	EBL	EBT	EBR	WBL	WBT	WBR	NBL	NBT	NBR	SBL	SBT	SBR
Lane Configurations												
Traffic Volume (vph)	600	1930	40	40	1930	290	70	20	70	290	10	410
Future Volume (vph)	600	1930	40	40	1930	290	70	20	70	290	10	410
Ideal Flow (vphpl)	2100	2100	2100	2100	2100	2100	2100	2100	2100	2100	2100	2100
Total Lost time (s)	4.0	4.0	4.0	4.0	4.0	4.0	4.0	4.0		4.0	4.0	4.0
Lane Util. Factor	0.97	0.91	1.00	1.00	0.91	1.00	1.00	1.00		1.00	1.00	1.00
Frt	1.00	1.00	0.85	1.00	1.00	0.85	1.00	0.88		1.00	1.00	0.85
Flt Protected	0.95	1.00	1.00	0.95	1.00	1.00	0.95	1.00		0.95	1.00	1.00
Satd. Flow (prot)	3794	5621	1750	1956	5621	1750	1956	1819		1956	2059	1750
Flt Permitted	0.95	1.00	1.00	0.95	1.00	1.00	0.75	1.00		0.70	1.00	1.00
Satd. Flow (perm)	3794	5621	1750	1956	5621	1750	1546	1819		1438	2059	1750
Peak-hour factor, PHF	1.00	1.00	1.00	1.00	1.00	1.00	1.00	1.00	1.00	1.00	1.00	1.00
Adj. Flow (vph)	600	1930	40	40	1930	290	70	20	70	290	10	410
RTOR Reduction (vph)	0	0	17	0	0	164	0	54	0	0	0	8
Lane Group Flow (vph)	600	1930	23	40	1930	126	70	36	0	290	10	402
Turn Type	Prot	NA	Perm	Prot	NA	Perm	Perm	NA		Perm	NA	pm+ov
Protected Phases	7	4		3	8			2			6	7
Permitted Phases			4			8	2			6		6
Actuated Green, G (s)	15.4	45.7	45.7	4.7	35.0	35.0	18.0	18.0		18.0	18.0	33.4
Effective Green, g (s)	15.4	45.7	45.7	4.7	35.0	35.0	18.0	18.0		18.0	18.0	33.4
Actuated g/C Ratio	0.19	0.57	0.57	0.06	0.44	0.44	0.22	0.22		0.22	0.22	0.42
Clearance Time (s)	4.0	4.0	4.0	4.0	4.0	4.0	4.0	4.0		4.0	4.0	4.0
Vehicle Extension (s)	3.0	3.0	3.0	3.0	3.0	3.0	3.0	3.0		3.0	3.0	3.0
Lane Grp Cap (vph)	726	3195	994	114	2446	761	346	407		321	460	814
v/s Ratio Prot	c0.16	0.34		0.02	c0.34			0.02			0.00	0.09
v/s Ratio Perm			0.01			0.07	0.05			c0.20		0.14
v/c Ratio	0.83	0.60	0.02	0.35	0.79	0.17	0.20	0.09		0.90	0.02	0.49
Uniform Delay, d1	31.2	11.4	7.6	36.4	19.5	13.8	25.4	24.7		30.4	24.3	17.3
Progression Factor	1.00	1.00	1.00	1.00	1.00	1.00	1.00	1.00		1.00	1.00	1.00
Incremental Delay, d2	7.7	0.3	0.0	1.9	1.8	0.1	1.3	0.4		30.7	0.1	0.5
Delay (s)	38.9	11.7	7.6	38.2	21.3	13.9	26.7	25.1		61.1	24.4	17.8
Level of Service	D	B	A	D	C	B	C	C		E	C	B
Approach Delay (s)		18.0			20.6			25.8			35.5	
Approach LOS		B			C			C			D	

Intersection Summary			
HCM 2000 Control Delay	21.5	HCM 2000 Level of Service	C
HCM 2000 Volume to Capacity ratio	0.83		
Actuated Cycle Length (s)	80.4	Sum of lost time (s)	12.0
Intersection Capacity Utilization	80.4%	ICU Level of Service	D
Analysis Period (min)	15		

c Critical Lane Group

Movement	EBL	EBT	WBT	WBR	SBL	SBR
Lane Configurations						
Traffic Volume (vph)	640	1640	1950	210	120	310
Future Volume (vph)	640	1640	1950	210	120	310
Ideal Flow (vphpl)	2100	2100	2100	2100	2100	2100
Total Lost time (s)	4.0	4.0	4.0	4.0	4.0	4.0
Lane Util. Factor	0.97	0.95	0.95	1.00	1.00	0.88
Frt	1.00	1.00	1.00	0.85	1.00	0.85
Flt Protected	0.95	1.00	1.00	1.00	0.95	1.00
Satd. Flow (prot)	2977	3069	2912	1303	1956	3080
Flt Permitted	0.95	1.00	1.00	1.00	0.95	1.00
Satd. Flow (perm)	2977	3069	2912	1303	1956	3080
Peak-hour factor, PHF	1.00	1.00	1.00	1.00	1.00	1.00
Adj. Flow (vph)	640	1640	1950	210	120	310
RTOR Reduction (vph)	0	0	0	66	0	275
Lane Group Flow (vph)	640	1640	1950	144	120	35
Heavy Vehicles (%)	30%	30%	37%	37%	2%	2%
Turn Type	Prot	NA	NA	Perm	Perm	Over
Protected Phases	7	4	8			7
Permitted Phases				8	6	
Actuated Green, G (s)	14.0	102.1	84.1	84.1	12.8	14.0
Effective Green, g (s)	14.0	102.1	84.1	84.1	12.8	14.0
Actuated g/C Ratio	0.11	0.83	0.68	0.68	0.10	0.11
Clearance Time (s)	4.0	4.0	4.0	4.0	4.0	4.0
Vehicle Extension (s)	3.0	3.0	3.0	3.0	3.0	3.0
Lane Grp Cap (vph)	339	2549	1992	891	203	350
v/s Ratio Prot	c0.21	0.53	c0.67			0.01
v/s Ratio Perm				0.11	c0.06	
v/c Ratio	1.89	0.64	0.98	0.16	0.59	0.10
Uniform Delay, d1	54.5	3.8	18.6	6.9	52.6	48.8
Progression Factor	1.00	1.00	1.00	1.00	1.00	1.00
Incremental Delay, d2	410.5	0.6	15.3	0.1	4.6	0.1
Delay (s)	465.0	4.3	33.8	7.0	57.1	48.9
Level of Service	F	A	C	A	E	D
Approach Delay (s)		133.7	31.2		51.2	
Approach LOS		F	C		D	

Intersection Summary			
HCM 2000 Control Delay	80.9	HCM 2000 Level of Service	F
HCM 2000 Volume to Capacity ratio	1.05		
Actuated Cycle Length (s)	122.9	Sum of lost time (s)	12.0
Intersection Capacity Utilization	81.3%	ICU Level of Service	D
Analysis Period (min)	15		
c Critical Lane Group			

Movement	EBL	EBT	EBR	WBL	WBT	WBR	NBL	NBT	NBR	SBL	SBT	SBR
Lane Configurations												
Traffic Volume (vph)	320	1390	60	30	1800	340	220	90	30	220	20	160
Future Volume (vph)	320	1390	60	30	1800	340	220	90	30	220	20	160
Ideal Flow (vphpl)	2100	2100	2100	2100	2100	2100	2100	2100	2100	2100	2100	2100
Total Lost time (s)	4.0	4.0	4.0	4.0	4.0	4.0	4.0	4.0		4.0	4.0	4.0
Lane Util. Factor	0.97	0.95	1.00	1.00	0.95	1.00	1.00	1.00		1.00	1.00	1.00
Frt	1.00	1.00	0.85	1.00	1.00	0.85	1.00	0.96		1.00	1.00	0.85
Flt Protected	0.95	1.00	1.00	0.95	1.00	1.00	0.95	1.00		0.95	1.00	1.00
Satd. Flow (prot)	2977	3069	1373	1435	2871	1284	1956	1982		1956	2059	1750
Flt Permitted	0.95	1.00	1.00	0.95	1.00	1.00	0.74	1.00		0.59	1.00	1.00
Satd. Flow (perm)	2977	3069	1373	1435	2871	1284	1532	1982		1219	2059	1750
Peak-hour factor, PHF	1.00	1.00	1.00	1.00	1.00	1.00	1.00	1.00	1.00	1.00	1.00	1.00
Adj. Flow (vph)	320	1390	60	30	1800	340	220	90	30	220	20	160
RTOR Reduction (vph)	0	0	21	0	0	123	0	8	0	0	0	91
Lane Group Flow (vph)	320	1390	39	30	1800	217	220	112	0	220	20	69
Heavy Vehicles (%)	30%	30%	30%	39%	39%	39%	2%	2%	2%	2%	2%	2%
Turn Type	Prot	NA	Perm	Prot	NA	Perm	Perm	NA		Perm	NA	Perm
Protected Phases	7	4		3	8			2			6	
Permitted Phases			4			8	2			6		6
Actuated Green, G (s)	9.0	99.7	99.7	5.9	96.6	96.6	34.0	34.0		34.0	34.0	34.0
Effective Green, g (s)	9.0	99.7	99.7	5.9	96.6	96.6	34.0	34.0		34.0	34.0	34.0
Actuated g/C Ratio	0.06	0.66	0.66	0.04	0.64	0.64	0.22	0.22		0.22	0.22	0.22
Clearance Time (s)	4.0	4.0	4.0	4.0	4.0	4.0	4.0	4.0		4.0	4.0	4.0
Vehicle Extension (s)	3.0	3.0	3.0	3.0	3.0	3.0	3.0	3.0		3.0	3.0	3.0
Lane Grp Cap (vph)	176	2018	902	55	1829	818	343	444		273	461	392
v/s Ratio Prot	c0.11	c0.45		0.02	c0.63			0.06			0.01	
v/s Ratio Perm			0.03			0.17	0.14			c0.18		0.04
v/c Ratio	1.82	0.69	0.04	0.55	0.98	0.26	0.64	0.25		0.81	0.04	0.18
Uniform Delay, d1	71.3	16.2	9.1	71.5	26.8	12.0	53.3	48.4		55.7	46.1	47.5
Progression Factor	1.00	1.00	1.00	1.00	1.00	1.00	1.00	1.00		1.00	1.00	1.00
Incremental Delay, d2	389.7	1.0	0.0	10.6	17.3	0.2	8.9	1.4		21.9	0.2	1.0
Delay (s)	461.0	17.2	9.2	82.1	44.0	12.2	62.2	49.7		77.6	46.2	48.5
Level of Service	F	B	A	F	D	B	E	D		E	D	D
Approach Delay (s)		97.2			39.6			57.8			64.4	
Approach LOS		F			D			E			E	

Intersection Summary			
HCM 2000 Control Delay	64.8	HCM 2000 Level of Service	E
HCM 2000 Volume to Capacity ratio	0.98		
Actuated Cycle Length (s)	151.6	Sum of lost time (s)	12.0
Intersection Capacity Utilization	81.0%	ICU Level of Service	D
Analysis Period (min)	15		
c Critical Lane Group			

Movement	EBL	EBT	WBU	WBT	WBR	SBL	SBR
Lane Configurations							
Traffic Volume (vph)	30	1600	40	2130	10	10	20
Future Volume (vph)	30	1600	40	2130	10	10	20
Ideal Flow (vphpl)	2100	2100	2100	2100	2100	2100	2100
Total Lost time (s)	4.0	4.0	4.0	4.0	4.0	4.0	4.0
Lane Util. Factor	1.00	0.95	1.00	0.95	1.00	1.00	1.00
Frt	1.00	1.00	1.00	1.00	0.85	1.00	0.85
Flt Protected	0.95	1.00	0.95	1.00	1.00	0.95	1.00
Satd. Flow (prot)	1535	3069	1956	2871	1284	1956	1750
Flt Permitted	0.95	1.00	0.95	1.00	1.00	0.95	1.00
Satd. Flow (perm)	1535	3069	1956	2871	1284	1956	1750
Peak-hour factor, PHF	1.00	1.00	1.00	1.00	1.00	1.00	1.00
Adj. Flow (vph)	30	1600	40	2130	10	10	20
RTOR Reduction (vph)	0	0	0	0	3	0	17
Lane Group Flow (vph)	30	1600	40	2130	7	10	3
Heavy Vehicles (%)	30%	30%	2%	39%	39%	2%	2%
Turn Type	Prot	NA	Prot	NA	Perm	Prot	Perm
Protected Phases	7	4	3	8		6	
Permitted Phases					8		6
Actuated Green, G (s)	2.3	75.3	5.1	78.1	78.1	16.0	16.0
Effective Green, g (s)	2.3	75.3	5.1	78.1	78.1	16.0	16.0
Actuated g/C Ratio	0.02	0.69	0.05	0.72	0.72	0.15	0.15
Clearance Time (s)	4.0	4.0	4.0	4.0	4.0	4.0	4.0
Vehicle Extension (s)	3.0	3.0	3.0	3.0	3.0	3.0	3.0
Lane Grp Cap (vph)	32	2131	92	2068	925	288	258
v/s Ratio Prot	c0.02	0.52	0.02	c0.74		c0.01	
v/s Ratio Perm					0.01		0.00
v/c Ratio	0.94	0.75	0.43	1.03	0.01	0.03	0.01
Uniform Delay, d1	53.0	10.6	50.2	15.2	4.3	39.6	39.4
Progression Factor	1.00	1.00	1.00	1.00	1.00	1.00	1.00
Incremental Delay, d2	131.8	1.5	3.3	27.9	0.0	0.2	0.1
Delay (s)	184.8	12.1	53.5	43.1	4.3	39.8	39.5
Level of Service	F	B	D	D	A	D	D
Approach Delay (s)		15.3		43.1		39.6	
Approach LOS		B		D		D	

Intersection Summary			
HCM 2000 Control Delay	31.3	HCM 2000 Level of Service	C
HCM 2000 Volume to Capacity ratio	0.86		
Actuated Cycle Length (s)	108.4	Sum of lost time (s)	12.0
Intersection Capacity Utilization	63.3%	ICU Level of Service	B
Analysis Period (min)	15		
c Critical Lane Group			

Movement	EBL	EBT	EBR	WBL	WBT	WBR	NBL	NBT	NBR	SBL	SBT	SBR
Lane Configurations												
Traffic Volume (veh/h)	0	1570	80	0	2170	30	0	0	20	0	0	10
Future Volume (Veh/h)	0	1570	80	0	2170	30	0	0	20	0	0	10
Sign Control		Free			Free			Stop			Stop	
Grade		0%			0%			0%			0%	
Peak Hour Factor	1.00	1.00	1.00	1.00	1.00	1.00	1.00	1.00	1.00	1.00	1.00	1.00
Hourly flow rate (vph)	0	1570	80	0	2170	30	0	0	20	0	0	10
Pedestrians												
Lane Width (ft)												
Walking Speed (ft/s)												
Percent Blockage												
Right turn flare (veh)												
Median type		None			None							
Median storage veh)												
Upstream signal (ft)												
pX, platoon unblocked												
vC, conflicting volume	2200			1650			2705	3810	825	2990	3835	1100
vC1, stage 1 conf vol												
vC2, stage 2 conf vol												
vCu, unblocked vol	2200			1650			2705	3810	825	2990	3835	1100
tC, single (s)	4.1			4.1			7.5	6.5	6.9	7.5	6.5	6.9
tC, 2 stage (s)												
tF (s)	2.2			2.2			3.5	4.0	3.3	3.5	4.0	3.3
p0 queue free %	100			100			100	100	94	100	100	95
cM capacity (veh/h)	236			387			10	4	316	6	4	207

Direction, Lane #	EB 1	EB 2	WB 1	WB 2	NB 1	SB 1
Volume Total	1047	603	1447	753	20	10
Volume Left	0	0	0	0	0	0
Volume Right	0	80	0	30	20	10
cSH	1700	1700	1700	1700	316	207
Volume to Capacity	0.62	0.35	0.85	0.44	0.06	0.05
Queue Length 95th (ft)	0	0	0	0	5	4
Control Delay (s)	0.0	0.0	0.0	0.0	17.2	23.3
Lane LOS					C	C
Approach Delay (s)	0.0		0.0		17.2	23.3
Approach LOS					C	C

Intersection Summary			
Average Delay	0.1		
Intersection Capacity Utilization	65.1%	ICU Level of Service	C
Analysis Period (min)	15		

Intersection	
Int Delay, s/veh	0.1

Movement	EBL	EBT	EBR	WBL	WBT	WBR	NBL	NBT	NBR	SBL	SBT	SBR
Traffic Vol, veh/h	0	1570	80	0	2170	30	0	0	20	0	0	10
Future Vol, veh/h	0	1570	80	0	2170	30	0	0	20	0	0	10
Conflicting Peds, #/hr	0	0	0	0	0	0	0	0	0	0	0	0
Sign Control	Free	Free	Free	Free	Free	Free	Stop	Stop	Stop	Stop	Stop	Stop
RT Channelized	-	-	None	-	-	None	-	-	None	-	-	None
Storage Length	-	-	-	-	-	-	-	-	0	-	-	0
Veh in Median Storage, #	-	0	-	-	0	-	-	0	-	-	0	-
Grade, %	-	0	-	-	0	-	-	0	-	-	0	-
Peak Hour Factor	100	100	100	100	100	100	100	100	100	100	100	100
Heavy Vehicles, %	2	2	2	2	2	2	2	2	2	2	2	2
Mvmt Flow	0	1570	80	0	2170	30	0	0	20	0	0	10

Major/Minor	Major1			Major2			Minor1			Minor2		
Conflicting Flow All	2200	0	0	1650	0	0	2695	3810	825	2970	3835	1100
Stage 1	-	-	-	-	-	-	1610	1610	-	2185	2185	-
Stage 2	-	-	-	-	-	-	1085	2200	-	785	1650	-
Critical Hdwy	4.14	-	-	4.14	-	-	7.54	6.54	6.94	7.54	6.54	6.94
Critical Hdwy Stg 1	-	-	-	-	-	-	6.54	5.54	-	6.54	5.54	-
Critical Hdwy Stg 2	-	-	-	-	-	-	6.54	5.54	-	6.54	5.54	-
Follow-up Hdwy	2.22	-	-	2.22	-	-	3.52	4.02	3.32	3.52	4.02	3.32
Pot Cap-1 Maneuver	236	-	-	387	-	-	10	4	316	6	4	207
Stage 1	-	-	-	-	-	-	109	162	-	47	83	-
Stage 2	-	-	-	-	-	-	231	81	-	352	155	-
Platoon blocked, %		-	-		-	-						
Mov Cap-1 Maneuver	236	-	-	387	-	-	10	4	316	6	4	207
Mov Cap-2 Maneuver	-	-	-	-	-	-	10	4	-	6	4	-
Stage 1	-	-	-	-	-	-	109	162	-	47	83	-
Stage 2	-	-	-	-	-	-	220	81	-	330	155	-

Approach	EB	WB	NB	SB
HCM Control Delay, s	0	0	17.2	23.3
HCM LOS			C	C

Minor Lane/Major Mvmt	NBLn1	EBL	EBT	EBR	WBL	WBT	WBR	SBLn1
Capacity (veh/h)	316	236	-	-	387	-	-	207
HCM Lane V/C Ratio	0.063	-	-	-	-	-	-	0.048
HCM Control Delay (s)	17.2	0	-	-	0	-	-	23.3
HCM Lane LOS	C	A	-	-	A	-	-	C
HCM 95th %tile Q(veh)	0.2	0	-	-	0	-	-	0.2

Movement	EBL	EBT	EBR	WBL	WBT	WBR	NBL	NBT	NBR	SBL	SBT	SBR
Lane Configurations												
Traffic Volume (veh/h)	0	1590	10	0	2200	10	0	0	10	0	0	10
Future Volume (Veh/h)	0	1590	10	0	2200	10	0	0	10	0	0	10
Sign Control		Free			Free			Stop			Stop	
Grade		0%			0%			0%			0%	
Peak Hour Factor	1.00	1.00	1.00	1.00	1.00	1.00	1.00	1.00	1.00	1.00	1.00	1.00
Hourly flow rate (vph)	0	1590	10	0	2200	10	0	0	10	0	0	10
Pedestrians												
Lane Width (ft)												
Walking Speed (ft/s)												
Percent Blockage												
Right turn flare (veh)												
Median type		None			None							
Median storage veh)												
Upstream signal (ft)												
pX, platoon unblocked												
vC, conflicting volume	2210			1600			2705	3805	800	3010	3805	1105
vC1, stage 1 conf vol												
vC2, stage 2 conf vol												
vCu, unblocked vol	2210			1600			2705	3805	800	3010	3805	1105
tC, single (s)	4.1			4.1			7.5	6.5	6.9	7.5	6.5	6.9
tC, 2 stage (s)												
tF (s)	2.2			2.2			3.5	4.0	3.3	3.5	4.0	3.3
p0 queue free %	100			100			100	100	97	100	100	95
cM capacity (veh/h)	234			405			10	4	328	6	4	205

Direction, Lane #	EB 1	EB 2	WB 1	WB 2	NB 1	SB 1
Volume Total	1060	540	1467	743	10	10
Volume Left	0	0	0	0	0	0
Volume Right	0	10	0	10	10	10
cSH	1700	1700	1700	1700	328	205
Volume to Capacity	0.62	0.32	0.86	0.44	0.03	0.05
Queue Length 95th (ft)	0	0	0	0	2	4
Control Delay (s)	0.0	0.0	0.0	0.0	16.3	23.4
Lane LOS					C	C
Approach Delay (s)	0.0		0.0		16.3	23.4
Approach LOS					C	C

Intersection Summary			
Average Delay	0.1		
Intersection Capacity Utilization	65.3%	ICU Level of Service	C
Analysis Period (min)	15		

Intersection	
Int Delay, s/veh	0.1

Movement	EBL	EBT	EBR	WBL	WBT	WBR	NBL	NBT	NBR	SBL	SBT	SBR
Traffic Vol, veh/h	0	1590	10	0	2200	10	0	0	10	0	0	10
Future Vol, veh/h	0	1590	10	0	2200	10	0	0	10	0	0	10
Conflicting Peds, #/hr	0	0	0	0	0	0	0	0	0	0	0	0
Sign Control	Free	Free	Free	Free	Free	Free	Stop	Stop	Stop	Stop	Stop	Stop
RT Channelized	-	-	None	-	-	None	-	-	None	-	-	None
Storage Length	-	-	-	-	-	-	-	-	0	-	-	0
Veh in Median Storage, #	-	0	-	-	0	-	-	0	-	-	0	-
Grade, %	-	0	-	-	0	-	-	0	-	-	0	-
Peak Hour Factor	100	100	100	100	100	100	100	100	100	100	100	100
Heavy Vehicles, %	2	2	2	2	2	2	2	2	2	2	2	2
Mvmt Flow	0	1590	10	0	2200	10	0	0	10	0	0	10

Major/Minor	Major1			Major2			Minor1			Minor2		
Conflicting Flow All	2210	0	0	1600	0	0	2695	3805	800	3000	3805	1105
Stage 1	-	-	-	-	-	-	1595	1595	-	2205	2205	-
Stage 2	-	-	-	-	-	-	1100	2210	-	795	1600	-
Critical Hdwy	4.14	-	-	4.14	-	-	7.54	6.54	6.94	7.54	6.54	6.94
Critical Hdwy Stg 1	-	-	-	-	-	-	6.54	5.54	-	6.54	5.54	-
Critical Hdwy Stg 2	-	-	-	-	-	-	6.54	5.54	-	6.54	5.54	-
Follow-up Hdwy	2.22	-	-	2.22	-	-	3.52	4.02	3.32	3.52	4.02	3.32
Pot Cap-1 Maneuver	234	-	-	405	-	-	10	4	328	6	4	205
Stage 1	-	-	-	-	-	-	111	165	-	45	81	-
Stage 2	-	-	-	-	-	-	226	81	-	347	164	-
Platoon blocked, %		-	-		-	-						
Mov Cap-1 Maneuver	234	-	-	405	-	-	10	4	328	6	4	205
Mov Cap-2 Maneuver	-	-	-	-	-	-	10	4	-	6	4	-
Stage 1	-	-	-	-	-	-	111	165	-	45	81	-
Stage 2	-	-	-	-	-	-	215	81	-	336	164	-

Approach	EB	WB	NB	SB
HCM Control Delay, s	0	0	16.3	23.5
HCM LOS			C	C

Minor Lane/Major Mvmt	NBLn1	EBL	EBT	EBR	WBL	WBT	WBR	SBLn1
Capacity (veh/h)	328	234	-	-	405	-	-	205
HCM Lane V/C Ratio	0.03	-	-	-	-	-	-	0.049
HCM Control Delay (s)	16.3	0	-	-	0	-	-	23.5
HCM Lane LOS	C	A	-	-	A	-	-	C
HCM 95th %tile Q(veh)	0.1	0	-	-	0	-	-	0.2

Movement	EBL	EBT	EBR	WBL	WBT	WBR	NBL	NBT	NBR	SBL	SBT	SBR
Lane Configurations												
Traffic Volume (veh/h)	0	1510	90	0	2170	10	0	0	150	0	0	20
Future Volume (Veh/h)	0	1510	90	0	2170	10	0	0	150	0	0	20
Sign Control		Free			Free			Stop			Stop	
Grade		0%			0%			0%			0%	
Peak Hour Factor	1.00	1.00	1.00	1.00	1.00	1.00	1.00	1.00	1.00	1.00	1.00	1.00
Hourly flow rate (vph)	0	1510	90	0	2170	10	0	0	150	0	0	20
Pedestrians												
Lane Width (ft)												
Walking Speed (ft/s)												
Percent Blockage												
Right turn flare (veh)												
Median type		None			None							
Median storage veh)												
Upstream signal (ft)												
pX, platoon unblocked												
vC, conflicting volume	2180			1600			2660	3735	800	3080	3775	1090
vC1, stage 1 conf vol												
vC2, stage 2 conf vol												
vCu, unblocked vol	2180			1600			2660	3735	800	3080	3775	1090
tC, single (s)	4.8			4.1			7.5	6.5	6.9	7.5	6.5	6.9
tC, 2 stage (s)												
tF (s)	2.5			2.2			3.5	4.0	3.3	3.5	4.0	3.3
p0 queue free %	100			100			100	100	54	100	100	90
cM capacity (veh/h)	156			405			10	4	328	3	4	210

Direction, Lane #	EB 1	EB 2	WB 1	WB 2	NB 1	SB 1
Volume Total	1007	593	1447	733	150	20
Volume Left	0	0	0	0	0	0
Volume Right	0	90	0	10	150	20
cSH	1700	1700	1700	1700	328	210
Volume to Capacity	0.59	0.35	0.85	0.43	0.46	0.10
Queue Length 95th (ft)	0	0	0	0	57	8
Control Delay (s)	0.0	0.0	0.0	0.0	24.9	23.9
Lane LOS					C	C
Approach Delay (s)	0.0		0.0		24.9	23.9
Approach LOS					C	C

Intersection Summary			
Average Delay	1.1		
Intersection Capacity Utilization	64.6%	ICU Level of Service	C
Analysis Period (min)	15		

Intersection	
Int Delay, s/veh	1.1

Movement	EBL	EBT	EBR	WBL	WBT	WBR	NBL	NBT	NBR	SBL	SBT	SBR
Traffic Vol, veh/h	0	1510	90	0	2170	10	0	0	150	0	0	20
Future Vol, veh/h	0	1510	90	0	2170	10	0	0	150	0	0	20
Conflicting Peds, #/hr	0	0	0	0	0	0	0	0	0	0	0	0
Sign Control	Free	Free	Free	Free	Free	Free	Stop	Stop	Stop	Stop	Stop	Stop
RT Channelized	-	-	None	-	-	None	-	-	None	-	-	None
Storage Length	-	-	-	-	-	-	-	-	0	-	-	0
Veh in Median Storage, #	-	0	-	-	0	-	-	0	-	-	0	-
Grade, %	-	0	-	-	0	-	-	0	-	-	0	-
Peak Hour Factor	100	100	100	100	100	100	100	100	100	100	100	100
Heavy Vehicles, %	33	33	2	2	41	41	2	2	2	2	2	2
Mvmt Flow	0	1510	90	0	2170	10	0	0	150	0	0	20

Major/Minor	Major1			Major2			Minor1			Minor2		
Conflicting Flow All	2180	0	0	1600	0	0	2640	3735	800	2930	3775	1090
Stage 1	-	-	-	-	-	-	1555	1555	-	2175	2175	-
Stage 2	-	-	-	-	-	-	1085	2180	-	755	1600	-
Critical Hdwy	4.76	-	-	4.14	-	-	7.54	6.54	6.94	7.54	6.54	6.94
Critical Hdwy Stg 1	-	-	-	-	-	-	6.54	5.54	-	6.54	5.54	-
Critical Hdwy Stg 2	-	-	-	-	-	-	6.54	5.54	-	6.54	5.54	-
Follow-up Hdwy	2.53	-	-	2.22	-	-	3.52	4.02	3.32	3.52	4.02	3.32
Pot Cap-1 Maneuver	156	-	-	405	-	-	11	4	328	7	4	210
Stage 1	-	-	-	-	-	-	118	172	-	47	84	-
Stage 2	-	-	-	-	-	-	231	83	-	367	164	-
Platoon blocked, %		-	-		-	-						
Mov Cap-1 Maneuver	156	-	-	405	-	-	10	4	328	4	4	210
Mov Cap-2 Maneuver	-	-	-	-	-	-	10	4	-	4	4	-
Stage 1	-	-	-	-	-	-	118	172	-	47	84	-
Stage 2	-	-	-	-	-	-	209	83	-	199	164	-

Approach	EB	WB	NB	SB
HCM Control Delay, s	0	0	24.9	23.9
HCM LOS			C	C

Minor Lane/Major Mvmt	NBLn1	EBL	EBT	EBR	WBL	WBT	WBR	SBLn1
Capacity (veh/h)	328	156	-	-	405	-	-	210
HCM Lane V/C Ratio	0.457	-	-	-	-	-	-	0.095
HCM Control Delay (s)	24.9	0	-	-	0	-	-	23.9
HCM Lane LOS	C	A	-	-	A	-	-	C
HCM 95th %tile Q(veh)	2.3	0	-	-	0	-	-	0.3

Movement	EBL	EBT	EBR	WBL	WBT	WBR	NBL	NBT	NBR	SBL	SBT	SBR
Lane Configurations												
Traffic Volume (vph)	190	1410	60	30	1910	30	130	10	20	20	10	20
Future Volume (vph)	190	1410	60	30	1910	30	130	10	20	20	10	20
Ideal Flow (vphpl)	2100	2100	2100	2100	2100	2100	2100	2100	2100	2100	2100	2100
Total Lost time (s)	4.0	4.0	4.0	4.0	4.0		4.0	4.0		4.0	4.0	
Lane Util. Factor	1.00	0.95	1.00	1.00	0.95		1.00	1.00		1.00	1.00	
Frt	1.00	1.00	0.85	1.00	1.00		1.00	0.90		1.00	0.90	
Flt Protected	0.95	1.00	1.00	0.95	1.00		0.95	1.00		0.95	1.00	
Satd. Flow (prot)	1500	3000	1342	1415	2823		1956	1853		1956	1853	
Flt Permitted	0.95	1.00	1.00	0.95	1.00		0.74	1.00		0.74	1.00	
Satd. Flow (perm)	1500	3000	1342	1415	2823		1519	1853		1519	1853	
Peak-hour factor, PHF	1.00	1.00	1.00	1.00	1.00	1.00	1.00	1.00	1.00	1.00	1.00	1.00
Adj. Flow (vph)	190	1410	60	30	1910	30	130	10	20	20	10	20
RTOR Reduction (vph)	0	0	8	0	1	0	0	18	0	0	18	0
Lane Group Flow (vph)	190	1410	52	30	1939	0	130	12	0	20	12	0
Heavy Vehicles (%)	33%	33%	33%	41%	41%	41%	2%	2%	2%	2%	2%	2%
Turn Type	Prot	NA	Perm	Prot	NA		Perm	NA		Perm	NA	
Protected Phases	7	4		3	8			2			6	
Permitted Phases			4				2			6		
Actuated Green, G (s)	21.6	127.4	127.4	4.8	110.6		16.1	16.1		16.1	16.1	
Effective Green, g (s)	21.6	127.4	127.4	4.8	110.6		16.1	16.1		16.1	16.1	
Actuated g/C Ratio	0.13	0.79	0.79	0.03	0.69		0.10	0.10		0.10	0.10	
Clearance Time (s)	4.0	4.0	4.0	4.0	4.0		4.0	4.0		4.0	4.0	
Vehicle Extension (s)	3.0	3.0	3.0	3.0	3.0		3.0	3.0		3.0	3.0	
Lane Grp Cap (vph)	202	2384	1066	42	1947		152	186		152	186	
v/s Ratio Prot	c0.13	0.47		0.02	c0.69			0.01			0.01	
v/s Ratio Perm			0.04				c0.09			0.01		
v/c Ratio	0.94	0.59	0.05	0.71	1.00		0.86	0.06		0.13	0.06	
Uniform Delay, d1	68.7	6.4	3.5	77.1	24.6		71.0	65.3		65.7	65.3	
Progression Factor	1.00	1.00	1.00	1.00	1.00		1.00	1.00		1.00	1.00	
Incremental Delay, d2	46.5	0.4	0.0	44.2	19.3		34.7	0.1		0.4	0.1	
Delay (s)	115.3	6.8	3.5	121.2	44.0		105.7	65.4		66.1	65.4	
Level of Service	F	A	A	F	D		F	E		E	E	
Approach Delay (s)		19.1			45.1			98.1			65.7	
Approach LOS		B			D			F			E	

Intersection Summary			
HCM 2000 Control Delay	36.3	HCM 2000 Level of Service	D
HCM 2000 Volume to Capacity ratio	0.97		
Actuated Cycle Length (s)	160.3	Sum of lost time (s)	12.0
Intersection Capacity Utilization	81.3%	ICU Level of Service	D
Analysis Period (min)	15		
c Critical Lane Group			

Movement	EBL	EBT	EBR	WBL	WBT	WBR	NBL	NBT	NBR	SBL	SBT	SBR
Lane Configurations												
Traffic Volume (veh/h)	0	1380	70	0	1930	30	0	0	10	0	0	20
Future Volume (Veh/h)	0	1380	70	0	1930	30	0	0	10	0	0	20
Sign Control		Free			Free			Stop			Stop	
Grade		0%			0%			0%			0%	
Peak Hour Factor	1.00	1.00	1.00	1.00	1.00	1.00	1.00	1.00	1.00	1.00	1.00	1.00
Hourly flow rate (vph)	0	1380	70	0	1930	30	0	0	10	0	0	20
Pedestrians												
Lane Width (ft)												
Walking Speed (ft/s)												
Percent Blockage												
Right turn flare (veh)												
Median type		None			None							
Median storage veh)												
Upstream signal (ft)												
pX, platoon unblocked												
vC, conflicting volume	1960			1450			2400	3375	725	2645	3395	980
vC1, stage 1 conf vol												
vC2, stage 2 conf vol												
vCu, unblocked vol	1960			1450			2400	3375	725	2645	3395	980
tC, single (s)	4.7			4.9			7.5	6.5	6.9	7.5	6.5	6.9
tC, 2 stage (s)												
tF (s)	2.5			2.6			3.5	4.0	3.3	3.5	4.0	3.3
p0 queue free %	100			100			100	100	97	100	100	92
cM capacity (veh/h)	201			314			16	8	368	11	7	249

Direction, Lane #	EB 1	EB 2	WB 1	WB 2	NB 1	SB 1
Volume Total	920	530	1287	673	10	20
Volume Left	0	0	0	0	0	0
Volume Right	0	70	0	30	10	20
cSH	1700	1700	1700	1700	368	249
Volume to Capacity	0.54	0.31	0.76	0.40	0.03	0.08
Queue Length 95th (ft)	0	0	0	0	2	6
Control Delay (s)	0.0	0.0	0.0	0.0	15.1	20.7
Lane LOS					C	C
Approach Delay (s)	0.0		0.0		15.1	20.7
Approach LOS					C	C

Intersection Summary			
Average Delay	0.2		
Intersection Capacity Utilization	59.1%	ICU Level of Service	B
Analysis Period (min)	15		

Intersection	
Int Delay, s/veh	0.2

Movement	EBL	EBT	EBR	WBL	WBT	WBR	NBL	NBT	NBR	SBL	SBT	SBR
Traffic Vol, veh/h	0	1380	70	0	1930	30	0	0	10	0	0	20
Future Vol, veh/h	0	1380	70	0	1930	30	0	0	10	0	0	20
Conflicting Peds, #/hr	0	0	0	0	0	0	0	0	0	0	0	0
Sign Control	Free	Free	Free	Free	Free	Free	Stop	Stop	Stop	Stop	Stop	Stop
RT Channelized	-	-	None	-	-	None	-	-	None	-	-	None
Storage Length	-	-	-	-	-	-	-	-	0	-	-	0
Veh in Median Storage, #	-	0	-	-	0	-	-	0	-	-	0	-
Grade, %	-	0	-	-	0	-	-	0	-	-	0	-
Peak Hour Factor	100	100	100	100	100	100	100	100	100	100	100	100
Heavy Vehicles, %	31	31	31	39	39	39	2	2	2	2	2	2
Mvmt Flow	0	1380	70	0	1930	30	0	0	10	0	0	20

Major/Minor	Major1			Major2			Minor1			Minor2		
Conflicting Flow All	1960	0	0	1450	0	0	2380	3375	725	2635	3395	980
Stage 1	-	-	-	-	-	-	1415	1415	-	1945	1945	-
Stage 2	-	-	-	-	-	-	965	1960	-	690	1450	-
Critical Hdwy	4.72	-	-	4.88	-	-	7.54	6.54	6.94	7.54	6.54	6.94
Critical Hdwy Stg 1	-	-	-	-	-	-	6.54	5.54	-	6.54	5.54	-
Critical Hdwy Stg 2	-	-	-	-	-	-	6.54	5.54	-	6.54	5.54	-
Follow-up Hdwy	2.51	-	-	2.59	-	-	3.52	4.02	3.32	3.52	4.02	3.32
Pot Cap-1 Maneuver	201	-	-	314	-	-	18	8	368	11	7	249
Stage 1	-	-	-	-	-	-	144	202	-	67	110	-
Stage 2	-	-	-	-	-	-	274	108	-	401	194	-
Platoon blocked, %		-	-		-	-						
Mov Cap-1 Maneuver	201	-	-	314	-	-	17	8	368	11	7	249
Mov Cap-2 Maneuver	-	-	-	-	-	-	17	8	-	11	7	-
Stage 1	-	-	-	-	-	-	144	202	-	67	110	-
Stage 2	-	-	-	-	-	-	252	108	-	390	194	-

Approach	EB	WB	NB	SB
HCM Control Delay, s	0	0	15.1	20.7
HCM LOS			C	C

Minor Lane/Major Mvmt	NBLn1	EBL	EBT	EBR	WBL	WBT	WBR	SBLn1
Capacity (veh/h)	368	201	-	-	314	-	-	249
HCM Lane V/C Ratio	0.027	-	-	-	-	-	-	0.08
HCM Control Delay (s)	15.1	0	-	-	0	-	-	20.7
HCM Lane LOS	C	A	-	-	A	-	-	C
HCM 95th %tile Q(veh)	0.1	0	-	-	0	-	-	0.3

Movement	EBL	EBT	EBR	WBL	WBT	WBR	NBL	NBT	NBR	SBL	SBT	SBR
Lane Configurations												
Traffic Volume (vph)	80	1290	20	30	1790	40	140	10	30	30	10	40
Future Volume (vph)	80	1290	20	30	1790	40	140	10	30	30	10	40
Ideal Flow (vphpl)	2100	2100	2100	2100	2100	2100	2100	2100	2100	2100	2100	2100
Total Lost time (s)	4.0	4.0		4.0	4.0		4.0	4.0		4.0	4.0	
Lane Util. Factor	1.00	0.95		1.00	0.95		1.00	1.00		1.00	1.00	
Frt	1.00	1.00		1.00	1.00		1.00	0.89		1.00	0.88	
Flt Protected	0.95	1.00		0.95	1.00		0.95	1.00		0.95	1.00	
Satd. Flow (prot)	1523	3039		1435	2861		1956	1827		1956	1812	
Flt Permitted	0.95	1.00		0.95	1.00		0.72	1.00		0.73	1.00	
Satd. Flow (perm)	1523	3039		1435	2861		1491	1827		1505	1812	
Peak-hour factor, PHF	1.00	1.00	1.00	1.00	1.00	1.00	1.00	1.00	1.00	1.00	1.00	1.00
Adj. Flow (vph)	80	1290	20	30	1790	40	140	10	30	30	10	40
RTOR Reduction (vph)	0	1	0	0	2	0	0	26	0	0	34	0
Lane Group Flow (vph)	80	1309	0	30	1828	0	140	14	0	30	16	0
Heavy Vehicles (%)	31%	31%	31%	39%	39%	39%	2%	2%	2%	2%	2%	2%
Turn Type	Prot	NA		Prot	NA		Perm	NA		Perm	NA	
Protected Phases	7	4		3	8			2			6	
Permitted Phases							2			6		
Actuated Green, G (s)	4.0	68.4		2.3	66.7		13.5	13.5		13.5	13.5	
Effective Green, g (s)	4.0	68.4		2.3	66.7		13.5	13.5		13.5	13.5	
Actuated g/C Ratio	0.04	0.71		0.02	0.69		0.14	0.14		0.14	0.14	
Clearance Time (s)	4.0	4.0		4.0	4.0		4.0	4.0		4.0	4.0	
Vehicle Extension (s)	3.0	3.0		3.0	3.0		3.0	3.0		3.0	3.0	
Lane Grp Cap (vph)	63	2160		34	1983		209	256		211	254	
v/s Ratio Prot	c0.05	0.43		0.02	c0.64			0.01			0.01	
v/s Ratio Perm							c0.09			0.02		
v/c Ratio	1.27	0.61		0.88	0.92		0.67	0.06		0.14	0.06	
Uniform Delay, d1	46.1	7.1		46.8	12.5		39.2	35.8		36.3	35.9	
Progression Factor	1.00	1.00		1.00	1.00		1.00	1.00		1.00	1.00	
Incremental Delay, d2	202.2	0.5		106.5	7.7		7.9	0.1		0.3	0.1	
Delay (s)	248.3	7.5		153.3	20.2		47.1	35.9		36.6	36.0	
Level of Service	F	A		F	C		D	D		D	D	
Approach Delay (s)		21.4			22.4			44.6			36.2	
Approach LOS		C			C			D			D	

Intersection Summary			
HCM 2000 Control Delay	23.4	HCM 2000 Level of Service	C
HCM 2000 Volume to Capacity ratio	0.89		
Actuated Cycle Length (s)	96.2	Sum of lost time (s)	12.0
Intersection Capacity Utilization	73.6%	ICU Level of Service	D
Analysis Period (min)	15		
c Critical Lane Group			

Movement	EBL	EBT	EBR	WBL	WBT	WBR	NBL	NBT	NBR	SBL	SBT	SBR
Lane Configurations												
Traffic Volume (veh/h)	0	1340	10	0	1840	10	0	0	10	0	0	10
Future Volume (Veh/h)	0	1340	10	0	1840	10	0	0	10	0	0	10
Sign Control		Free			Free			Stop			Stop	
Grade		0%			0%			0%			0%	
Peak Hour Factor	1.00	1.00	1.00	1.00	1.00	1.00	1.00	1.00	1.00	1.00	1.00	1.00
Hourly flow rate (vph)	0	1340	10	0	1840	10	0	0	10	0	0	10
Pedestrians												
Lane Width (ft)												
Walking Speed (ft/s)												
Percent Blockage												
Right turn flare (veh)												
Median type		None			None							
Median storage veh)												
Upstream signal (ft)												
pX, platoon unblocked												
vC, conflicting volume	1850			1350			2275	3195	675	2525	3195	925
vC1, stage 1 conf vol												
vC2, stage 2 conf vol												
vCu, unblocked vol	1850			1350			2275	3195	675	2525	3195	925
tC, single (s)	4.1			4.1			7.5	6.5	6.9	7.5	6.5	6.9
tC, 2 stage (s)												
tF (s)	2.2			2.2			3.5	4.0	3.3	3.5	4.0	3.3
p0 queue free %	100			100			100	100	97	100	100	96
cM capacity (veh/h)	324			506			21	10	396	14	10	271

Direction, Lane #	EB 1	EB 2	WB 1	WB 2	NB 1	SB 1
Volume Total	893	457	1227	623	10	10
Volume Left	0	0	0	0	0	0
Volume Right	0	10	0	10	10	10
cSH	1700	1700	1700	1700	396	271
Volume to Capacity	0.53	0.27	0.72	0.37	0.03	0.04
Queue Length 95th (ft)	0	0	0	0	2	3
Control Delay (s)	0.0	0.0	0.0	0.0	14.3	18.8
Lane LOS					B	C
Approach Delay (s)	0.0		0.0		14.3	18.8
Approach LOS					B	C

Intersection Summary			
Average Delay	0.1		
Intersection Capacity Utilization	56.3%	ICU Level of Service	B
Analysis Period (min)	15		

Intersection	
Int Delay, s/veh	0.1

Movement	EBL	EBT	EBR	WBL	WBT	WBR	NBL	NBT	NBR	SBL	SBT	SBR
Traffic Vol, veh/h	0	1340	10	0	1840	10	0	0	10	0	0	10
Future Vol, veh/h	0	1340	10	0	1840	10	0	0	10	0	0	10
Conflicting Peds, #/hr	0	0	0	0	0	0	0	0	0	0	0	0
Sign Control	Free	Free	Free	Free	Free	Free	Stop	Stop	Stop	Stop	Stop	Stop
RT Channelized	-	-	None	-	-	None	-	-	None	-	-	None
Storage Length	-	-	-	-	-	-	-	-	0	-	-	0
Veh in Median Storage, #	-	0	-	-	0	-	-	0	-	-	0	-
Grade, %	-	0	-	-	0	-	-	0	-	-	0	-
Peak Hour Factor	100	100	100	100	100	100	100	100	100	100	100	100
Heavy Vehicles, %	2	2	2	2	2	2	2	2	2	2	2	2
Mvmt Flow	0	1340	10	0	1840	10	0	0	10	0	0	10

Major/Minor	Major1			Major2			Minor1			Minor2		
Conflicting Flow All	1850	0	0	1350	0	0	2265	3195	675	2515	3195	925
Stage 1	-	-	-	-	-	-	1345	1345	-	1845	1845	-
Stage 2	-	-	-	-	-	-	920	1850	-	670	1350	-
Critical Hdwy	4.14	-	-	4.14	-	-	7.54	6.54	6.94	7.54	6.54	6.94
Critical Hdwy Stg 1	-	-	-	-	-	-	6.54	5.54	-	6.54	5.54	-
Critical Hdwy Stg 2	-	-	-	-	-	-	6.54	5.54	-	6.54	5.54	-
Follow-up Hdwy	2.22	-	-	2.22	-	-	3.52	4.02	3.32	3.52	4.02	3.32
Pot Cap-1 Maneuver	324	-	-	506	-	-	22	10	396	14	10	271
Stage 1	-	-	-	-	-	-	160	218	-	77	124	-
Stage 2	-	-	-	-	-	-	292	123	-	413	217	-
Platoon blocked, %		-	-		-	-						
Mov Cap-1 Maneuver	324	-	-	506	-	-	21	10	396	14	10	271
Mov Cap-2 Maneuver	-	-	-	-	-	-	21	10	-	14	10	-
Stage 1	-	-	-	-	-	-	160	218	-	77	124	-
Stage 2	-	-	-	-	-	-	281	123	-	403	217	-

Approach	EB	WB	NB	SB
HCM Control Delay, s	0	0	14.3	18.8
HCM LOS			B	C

Minor Lane/Major Mvmt	NBLn1	EBL	EBT	EBR	WBL	WBT	WBR	SBLn1
Capacity (veh/h)	396	324	-	-	506	-	-	271
HCM Lane V/C Ratio	0.025	-	-	-	-	-	-	0.037
HCM Control Delay (s)	14.3	0	-	-	0	-	-	18.8
HCM Lane LOS	B	A	-	-	A	-	-	C
HCM 95th %tile Q(veh)	0.1	0	-	-	0	-	-	0.1

Movement	EBL	EBT	EBR	WBL	WBT	WBR	NBL	NBT	NBR	SBL	SBT	SBR
Lane Configurations												
Traffic Volume (veh/h)	0	1340	0	0	1830	30	0	0	0	0	0	20
Future Volume (Veh/h)	0	1340	0	0	1830	30	0	0	0	0	0	20
Sign Control		Free			Free			Stop			Stop	
Grade		0%			0%			0%			0%	
Peak Hour Factor	1.00	1.00	1.00	1.00	1.00	1.00	1.00	1.00	1.00	1.00	1.00	1.00
Hourly flow rate (vph)	0	1340	0	0	1830	30	0	0	0	0	0	20
Pedestrians												
Lane Width (ft)												
Walking Speed (ft/s)												
Percent Blockage												
Right turn flare (veh)												
Median type		None			None							
Median storage veh)												
Upstream signal (ft)												
pX, platoon unblocked												
vC, conflicting volume	1860			1340			2275	3200	670	2515	3185	930
vC1, stage 1 conf vol												
vC2, stage 2 conf vol												
vCu, unblocked vol	1860			1340			2275	3200	670	2515	3185	930
tC, single (s)	4.1			4.1			7.5	6.5	6.9	7.5	6.5	6.9
tC, 2 stage (s)												
tF (s)	2.2			2.2			3.5	4.0	3.3	3.5	4.0	3.3
p0 queue free %	100			100			100	100	100	100	100	93
cM capacity (veh/h)	321			510			20	10	399	14	10	269

Direction, Lane #	EB 1	EB 2	WB 1	WB 2	NB 1	SB 1
Volume Total	893	447	1220	640	0	20
Volume Left	0	0	0	0	0	0
Volume Right	0	0	0	30	0	20
cSH	1700	1700	1700	1700	1700	269
Volume to Capacity	0.53	0.26	0.72	0.38	0.00	0.07
Queue Length 95th (ft)	0	0	0	0	0	6
Control Delay (s)	0.0	0.0	0.0	0.0	0.0	19.5
Lane LOS					A	C
Approach Delay (s)	0.0		0.0		0.0	19.5
Approach LOS					A	C

Intersection Summary			
Average Delay	0.1		
Intersection Capacity Utilization	56.6%	ICU Level of Service	B
Analysis Period (min)	15		

Intersection	
Int Delay, s/veh	0.1

Movement	EBL	EBT	EBR	WBL	WBT	WBR	NBL	NBT	NBR	SBL	SBT	SBR
Traffic Vol, veh/h	0	1340	0	0	1830	30	0	0	0	0	0	20
Future Vol, veh/h	0	1340	0	0	1830	30	0	0	0	0	0	20
Conflicting Peds, #/hr	0	0	0	0	0	0	0	0	0	0	0	0
Sign Control	Free	Free	Free	Free	Free	Free	Stop	Stop	Stop	Stop	Stop	Stop
RT Channelized	-	-	None	-	-	None	-	-	None	-	-	None
Storage Length	-	-	-	-	-	-	-	-	0	-	-	0
Veh in Median Storage, #	-	0	-	-	0	-	-	0	-	-	0	-
Grade, %	-	0	-	-	0	-	-	0	-	-	0	-
Peak Hour Factor	100	100	100	100	100	100	100	100	100	100	100	100
Heavy Vehicles, %	2	2	2	2	2	2	2	2	2	2	2	2
Mvmt Flow	0	1340	0	0	1830	30	0	0	0	0	0	20

Major/Minor	Major1			Major2			Minor1			Minor2		
Conflicting Flow All	1860	0	0	1340	0	0	2255	3200	670	2515	3185	930
Stage 1	-	-	-	-	-	-	1340	1340	-	1845	1845	-
Stage 2	-	-	-	-	-	-	915	1860	-	670	1340	-
Critical Hdwy	4.14	-	-	4.14	-	-	7.54	6.54	6.94	7.54	6.54	6.94
Critical Hdwy Stg 1	-	-	-	-	-	-	6.54	5.54	-	6.54	5.54	-
Critical Hdwy Stg 2	-	-	-	-	-	-	6.54	5.54	-	6.54	5.54	-
Follow-up Hdwy	2.22	-	-	2.22	-	-	3.52	4.02	3.32	3.52	4.02	3.32
Pot Cap-1 Maneuver	321	-	-	510	-	-	23	10	399	14	10	269
Stage 1	-	-	-	-	-	-	161	220	-	77	124	-
Stage 2	-	-	-	-	-	-	294	121	-	413	220	-
Platoon blocked, %		-	-		-	-						
Mov Cap-1 Maneuver	321	-	-	510	-	-	21	10	399	14	10	269
Mov Cap-2 Maneuver	-	-	-	-	-	-	21	10	-	14	10	-
Stage 1	-	-	-	-	-	-	161	220	-	77	124	-
Stage 2	-	-	-	-	-	-	272	121	-	413	220	-

Approach	EB	WB	NB	SB
HCM Control Delay, s	0	0	0	19.5
HCM LOS			A	C

Minor Lane/Major Mvmt	NBLn1	EBL	EBT	EBR	WBL	WBT	WBR	SBLn1
Capacity (veh/h)	-	321	-	-	510	-	-	269
HCM Lane V/C Ratio	-	-	-	-	-	-	-	0.074
HCM Control Delay (s)	0	0	-	-	0	-	-	19.5
HCM Lane LOS	A	A	-	-	A	-	-	C
HCM 95th %tile Q(veh)	-	0	-	-	0	-	-	0.2

Movement	EBL	EBT	EBR	WBL	WBT	WBR	NBL	NBT	NBR	SBL	SBT	SBR
Lane Configurations												
Traffic Volume (veh/h)	0	1340	10	0	1850	10	0	0	10	0	0	10
Future Volume (Veh/h)	0	1340	10	0	1850	10	0	0	10	0	0	10
Sign Control		Free			Free			Stop			Stop	
Grade		0%			0%			0%			0%	
Peak Hour Factor	1.00	1.00	1.00	1.00	1.00	1.00	1.00	1.00	1.00	1.00	1.00	1.00
Hourly flow rate (vph)	0	1340	10	0	1850	10	0	0	10	0	0	10
Pedestrians												
Lane Width (ft)												
Walking Speed (ft/s)												
Percent Blockage												
Right turn flare (veh)												
Median type		None			None							
Median storage veh)												
Upstream signal (ft)												
pX, platoon unblocked												
vC, conflicting volume	1860			1350			2280	3205	675	2535	3205	930
vC1, stage 1 conf vol												
vC2, stage 2 conf vol												
vCu, unblocked vol	1860			1350			2280	3205	675	2535	3205	930
tC, single (s)	4.1			4.1			7.5	6.5	6.9	7.5	6.5	6.9
tC, 2 stage (s)												
tF (s)	2.2			2.2			3.5	4.0	3.3	3.5	4.0	3.3
p0 queue free %	100			100			100	100	97	100	100	96
cM capacity (veh/h)	321			506			21	10	396	13	10	269

Direction, Lane #	EB 1	EB 2	WB 1	WB 2	NB 1	SB 1
Volume Total	893	457	1233	627	10	10
Volume Left	0	0	0	0	0	0
Volume Right	0	10	0	10	10	10
cSH	1700	1700	1700	1700	396	269
Volume to Capacity	0.53	0.27	0.73	0.37	0.03	0.04
Queue Length 95th (ft)	0	0	0	0	2	3
Control Delay (s)	0.0	0.0	0.0	0.0	14.3	18.9
Lane LOS					B	C
Approach Delay (s)	0.0		0.0		14.3	18.9
Approach LOS					B	C

Intersection Summary			
Average Delay	0.1		
Intersection Capacity Utilization	56.6%	ICU Level of Service	B
Analysis Period (min)	15		

Intersection	
Int Delay, s/veh	0.1

Movement	EBL	EBT	EBR	WBL	WBT	WBR	NBL	NBT	NBR	SBL	SBT	SBR
Traffic Vol, veh/h	0	1340	10	0	1850	10	0	0	10	0	0	10
Future Vol, veh/h	0	1340	10	0	1850	10	0	0	10	0	0	10
Conflicting Peds, #/hr	0	0	0	0	0	0	0	0	0	0	0	0
Sign Control	Free	Free	Free	Free	Free	Free	Stop	Stop	Stop	Stop	Stop	Stop
RT Channelized	-	-	None	-	-	None	-	-	None	-	-	None
Storage Length	-	-	-	-	-	-	-	-	0	-	-	0
Veh in Median Storage, #	-	0	-	-	0	-	-	0	-	-	0	-
Grade, %	-	0	-	-	0	-	-	0	-	-	0	-
Peak Hour Factor	100	100	100	100	100	100	100	100	100	100	100	100
Heavy Vehicles, %	2	2	2	2	2	2	2	2	2	2	2	2
Mvmt Flow	0	1340	10	0	1850	10	0	0	10	0	0	10

Major/Minor	Major1			Major2			Minor1			Minor2		
Conflicting Flow All	1860	0	0	1350	0	0	2270	3205	675	2525	3205	930
Stage 1	-	-	-	-	-	-	1345	1345	-	1855	1855	-
Stage 2	-	-	-	-	-	-	925	1860	-	670	1350	-
Critical Hdwy	4.14	-	-	4.14	-	-	7.54	6.54	6.94	7.54	6.54	6.94
Critical Hdwy Stg 1	-	-	-	-	-	-	6.54	5.54	-	6.54	5.54	-
Critical Hdwy Stg 2	-	-	-	-	-	-	6.54	5.54	-	6.54	5.54	-
Follow-up Hdwy	2.22	-	-	2.22	-	-	3.52	4.02	3.32	3.52	4.02	3.32
Pot Cap-1 Maneuver	321	-	-	506	-	-	22	10	396	14	10	269
Stage 1	-	-	-	-	-	-	160	218	-	76	122	-
Stage 2	-	-	-	-	-	-	290	121	-	413	217	-
Platoon blocked, %		-	-		-	-						
Mov Cap-1 Maneuver	321	-	-	506	-	-	21	10	396	14	10	269
Mov Cap-2 Maneuver	-	-	-	-	-	-	21	10	-	14	10	-
Stage 1	-	-	-	-	-	-	160	218	-	76	122	-
Stage 2	-	-	-	-	-	-	279	121	-	403	217	-

Approach	EB	WB	NB	SB
HCM Control Delay, s	0	0	14.3	18.9
HCM LOS			B	C

Minor Lane/Major Mvmt	NBLn1	EBL	EBT	EBR	WBL	WBT	WBR	SBLn1
Capacity (veh/h)	396	321	-	-	506	-	-	269
HCM Lane V/C Ratio	0.025	-	-	-	-	-	-	0.037
HCM Control Delay (s)	14.3	0	-	-	0	-	-	18.9
HCM Lane LOS	B	A	-	-	A	-	-	C
HCM 95th %tile Q(veh)	0.1	0	-	-	0	-	-	0.1

Movement	EBL	EBT	EBR	WBL	WBT	WBR	NBL	NBT	NBR	SBL	SBT	SBR
Lane Configurations												
Traffic Volume (veh/h)	0	1330	10	0	1840	70	0	0	20	0	0	10
Future Volume (Veh/h)	0	1330	10	0	1840	70	0	0	20	0	0	10
Sign Control		Free			Free			Stop			Stop	
Grade		0%			0%			0%			0%	
Peak Hour Factor	1.00	1.00	1.00	1.00	1.00	1.00	1.00	1.00	1.00	1.00	1.00	1.00
Hourly flow rate (vph)	0	1330	10	0	1840	70	0	0	20	0	0	10
Pedestrians												
Lane Width (ft)												
Walking Speed (ft/s)												
Percent Blockage												
Right turn flare (veh)												
Median type		None			None							
Median storage veh)												
Upstream signal (ft)												
pX, platoon unblocked												
vC, conflicting volume	1910			1340			2265	3245	670	2560	3215	955
vC1, stage 1 conf vol												
vC2, stage 2 conf vol												
vCu, unblocked vol	1910			1340			2265	3245	670	2560	3215	955
tC, single (s)	4.7			4.8			7.5	6.5	6.9	7.5	6.5	6.9
tC, 2 stage (s)												
tF (s)	2.5			2.6			3.5	4.0	3.3	3.5	4.0	3.3
p0 queue free %	100			100			100	100	95	100	100	96
cM capacity (veh/h)	218			363			21	9	399	12	10	259

Direction, Lane #	EB 1	EB 2	WB 1	WB 2	NB 1	SB 1
Volume Total	887	453	1227	683	20	10
Volume Left	0	0	0	0	0	0
Volume Right	0	10	0	70	20	10
cSH	1700	1700	1700	1700	399	259
Volume to Capacity	0.52	0.27	0.72	0.40	0.05	0.04
Queue Length 95th (ft)	0	0	0	0	4	3
Control Delay (s)	0.0	0.0	0.0	0.0	14.5	19.5
Lane LOS					B	C
Approach Delay (s)	0.0		0.0		14.5	19.5
Approach LOS					B	C

Intersection Summary			
Average Delay	0.1		
Intersection Capacity Utilization	58.0%	ICU Level of Service	B
Analysis Period (min)	15		

Intersection	
Int Delay, s/veh	0.1

Movement	EBL	EBT	EBR	WBL	WBT	WBR	NBL	NBT	NBR	SBL	SBT	SBR
Traffic Vol, veh/h	0	1330	10	0	1840	70	0	0	20	0	0	10
Future Vol, veh/h	0	1330	10	0	1840	70	0	0	20	0	0	10
Conflicting Peds, #/hr	0	0	0	0	0	0	0	0	0	0	0	0
Sign Control	Free	Free	Free	Free	Free	Free	Stop	Stop	Stop	Stop	Stop	Stop
RT Channelized	-	-	None	-	-	None	-	-	None	-	-	None
Storage Length	-	-	-	-	-	-	-	-	0	-	-	0
Veh in Median Storage, #	-	0	-	-	0	-	-	0	-	-	0	-
Grade, %	-	0	-	-	0	-	-	0	-	-	0	-
Peak Hour Factor	100	100	100	100	100	100	100	100	100	100	100	100
Heavy Vehicles, %	29	29	29	36	36	36	2	2	2	2	2	2
Mvmt Flow	0	1330	10	0	1840	70	0	0	20	0	0	10

Major/Minor	Major1			Major2			Minor1			Minor2		
Conflicting Flow All	1910	0	0	1340	0	0	2255	3245	670	2540	3215	955
Stage 1	-	-	-	-	-	-	1335	1335	-	1875	1875	-
Stage 2	-	-	-	-	-	-	920	1910	-	665	1340	-
Critical Hdwy	4.68	-	-	4.82	-	-	7.54	6.54	6.94	7.54	6.54	6.94
Critical Hdwy Stg 1	-	-	-	-	-	-	6.54	5.54	-	6.54	5.54	-
Critical Hdwy Stg 2	-	-	-	-	-	-	6.54	5.54	-	6.54	5.54	-
Follow-up Hdwy	2.49	-	-	2.56	-	-	3.52	4.02	3.32	3.52	4.02	3.32
Pot Cap-1 Maneuver	218	-	-	363	-	-	23	9	399	14	10	259
Stage 1	-	-	-	-	-	-	162	221	-	74	119	-
Stage 2	-	-	-	-	-	-	292	115	-	416	220	-
Platoon blocked, %		-	-		-	-						
Mov Cap-1 Maneuver	218	-	-	363	-	-	22	9	399	13	10	259
Mov Cap-2 Maneuver	-	-	-	-	-	-	22	9	-	13	10	-
Stage 1	-	-	-	-	-	-	162	221	-	74	119	-
Stage 2	-	-	-	-	-	-	281	115	-	395	220	-

Approach	EB	WB	NB	SB
HCM Control Delay, s	0	0	14.5	19.5
HCM LOS			B	C

Minor Lane/Major Mvmt	NBLn1	EBL	EBT	EBR	WBL	WBT	WBR	SBLn1
Capacity (veh/h)	399	218	-	-	363	-	-	259
HCM Lane V/C Ratio	0.05	-	-	-	-	-	-	0.039
HCM Control Delay (s)	14.5	0	-	-	0	-	-	19.5
HCM Lane LOS	B	A	-	-	A	-	-	C
HCM 95th %tile Q(veh)	0.2	0	-	-	0	-	-	0.1

Movement	EBL	EBT	EBR	WBL	WBT	WBR	NBL	NBT	NBR	SBL	SBT	SBR
Lane Configurations												
Traffic Volume (vph)	150	1200	20	40	1670	30	90	40	10	70	30	150
Future Volume (vph)	150	1200	20	40	1670	30	90	40	10	70	30	150
Ideal Flow (vphpl)	2100	2100	2100	2100	2100	2100	2100	2100	2100	2100	2100	2100
Total Lost time (s)	4.0	4.0	4.0	4.0	4.0	4.0	4.0	4.0		4.0	4.0	
Lane Util. Factor	0.97	0.95	1.00	1.00	0.95	1.00	1.00	1.00		1.00	1.00	
Frt	1.00	1.00	0.85	1.00	1.00	0.85	1.00	0.97		1.00	0.88	
Flt Protected	0.95	1.00	1.00	0.95	1.00	1.00	0.95	1.00		0.95	1.00	
Satd. Flow (prot)	3000	3093	1384	1467	2934	1312	1956	1997		1956	1801	
Flt Permitted	0.95	1.00	1.00	0.95	1.00	1.00	0.49	1.00		0.72	1.00	
Satd. Flow (perm)	3000	3093	1384	1467	2934	1312	1006	1997		1491	1801	
Peak-hour factor, PHF	1.00	1.00	1.00	1.00	1.00	1.00	1.00	1.00	1.00	1.00	1.00	1.00
Adj. Flow (vph)	150	1200	20	40	1670	30	90	40	10	70	30	150
RTOR Reduction (vph)	0	0	8	0	0	12	0	8	0	0	113	0
Lane Group Flow (vph)	150	1200	12	40	1670	18	90	42	0	70	67	0
Heavy Vehicles (%)	29%	29%	29%	36%	36%	36%	2%	2%	2%	2%	2%	2%
Turn Type	Prot	NA	Perm	Prot	NA	Perm	Perm	NA		Perm	NA	
Protected Phases	7	4		3	8			2			6	
Permitted Phases			4			8	2			6		
Actuated Green, G (s)	6.0	55.4	55.4	5.5	54.9	54.9	17.0	17.0		17.0	17.0	
Effective Green, g (s)	6.0	55.4	55.4	5.5	54.9	54.9	17.0	17.0		17.0	17.0	
Actuated g/C Ratio	0.07	0.62	0.62	0.06	0.61	0.61	0.19	0.19		0.19	0.19	
Clearance Time (s)	4.0	4.0	4.0	4.0	4.0	4.0	4.0	4.0		4.0	4.0	
Vehicle Extension (s)	3.0	3.0	3.0	3.0	3.0	3.0	3.0	3.0		3.0	3.0	
Lane Grp Cap (vph)	200	1906	852	89	1791	801	190	377		281	340	
v/s Ratio Prot	c0.05	0.39		0.03	c0.57			0.02			0.04	
v/s Ratio Perm			0.01			0.01	c0.09			0.05		
v/c Ratio	0.75	0.63	0.01	0.45	0.93	0.02	0.47	0.11		0.25	0.20	
Uniform Delay, d1	41.2	10.8	6.7	40.7	15.8	6.9	32.5	30.2		31.0	30.7	
Progression Factor	1.00	1.00	1.00	1.00	1.00	1.00	1.00	1.00		1.00	1.00	
Incremental Delay, d2	14.6	0.7	0.0	3.6	9.4	0.0	8.2	0.6		2.1	1.3	
Delay (s)	55.8	11.5	6.7	44.3	25.2	6.9	40.7	30.8		33.1	32.0	
Level of Service	E	B	A	D	C	A	D	C		C	C	
Approach Delay (s)		16.3			25.4			37.2			32.3	
Approach LOS		B			C			D			C	

Intersection Summary			
HCM 2000 Control Delay	22.8	HCM 2000 Level of Service	C
HCM 2000 Volume to Capacity ratio	0.82		
Actuated Cycle Length (s)	89.9	Sum of lost time (s)	12.0
Intersection Capacity Utilization	73.3%	ICU Level of Service	D
Analysis Period (min)	15		
c Critical Lane Group			

Movement	EBL	EBT	EBR	WBL	WBT	WBR	NBL	NBT	NBR	SBL	SBT	SBR
Lane Configurations												
Traffic Volume (veh/h)	0	1150	150	0	1700	70	0	0	10	0	0	40
Future Volume (Veh/h)	0	1150	150	0	1700	70	0	0	10	0	0	40
Sign Control		Free			Free			Stop			Stop	
Grade		0%			0%			0%			0%	
Peak Hour Factor	1.00	1.00	1.00	1.00	1.00	1.00	1.00	1.00	1.00	1.00	1.00	1.00
Hourly flow rate (vph)	0	1150	150	0	1700	70	0	0	10	0	0	40
Pedestrians												
Lane Width (ft)												
Walking Speed (ft/s)												
Percent Blockage												
Right turn flare (veh)												
Median type		None			None							
Median storage veh)												
Upstream signal (ft)												
pX, platoon unblocked												
vC, conflicting volume	1770			1300			2115	2995	650	2320	3035	885
vC1, stage 1 conf vol												
vC2, stage 2 conf vol												
vCu, unblocked vol	1770			1300			2115	2995	650	2320	3035	885
tC, single (s)	4.6			4.8			7.5	6.5	6.9	7.5	6.5	6.9
tC, 2 stage (s)												
tF (s)	2.5			2.6			3.5	4.0	3.3	3.5	4.0	3.3
p0 queue free %	100			100			100	100	98	100	100	86
cM capacity (veh/h)	260			378			25	13	412	20	13	288

Direction, Lane #	EB 1	EB 2	WB 1	WB 2	NB 1	SB 1
Volume Total	767	533	1133	637	10	40
Volume Left	0	0	0	0	0	0
Volume Right	0	150	0	70	10	40
cSH	1700	1700	1700	1700	412	288
Volume to Capacity	0.45	0.31	0.67	0.37	0.02	0.14
Queue Length 95th (ft)	0	0	0	0	2	12
Control Delay (s)	0.0	0.0	0.0	0.0	14.0	19.5
Lane LOS					B	C
Approach Delay (s)	0.0		0.0		14.0	19.5
Approach LOS					B	C

Intersection Summary			
Average Delay	0.3		
Intersection Capacity Utilization	54.5%	ICU Level of Service	A
Analysis Period (min)	15		

Intersection	
Int Delay, s/veh	0.3

Movement	EBL	EBT	EBR	WBL	WBT	WBR	NBL	NBT	NBR	SBL	SBT	SBR
Traffic Vol, veh/h	0	1150	150	0	1700	70	0	0	10	0	0	40
Future Vol, veh/h	0	1150	150	0	1700	70	0	0	10	0	0	40
Conflicting Peds, #/hr	0	0	0	0	0	0	0	0	0	0	0	0
Sign Control	Free	Free	Free	Free	Free	Free	Stop	Stop	Stop	Stop	Stop	Stop
RT Channelized	-	-	None	-	-	None	-	-	None	-	-	None
Storage Length	-	-	-	-	-	-	-	-	0	-	-	0
Veh in Median Storage, #	-	0	-	-	0	-	-	0	-	-	0	-
Grade, %	-	0	-	-	0	-	-	0	-	-	0	-
Peak Hour Factor	100	100	100	100	100	100	100	100	100	100	100	100
Heavy Vehicles, %	26	26	26	36	36	36	2	2	2	2	2	2
Mvmt Flow	0	1150	150	0	1700	70	0	0	10	0	0	40

Major/Minor	Major1			Major2			Minor1			Minor2		
Conflicting Flow All	1770	0	0	1300	0	0	2075	2995	650	2310	3035	885
Stage 1	-	-	-	-	-	-	1225	1225	-	1735	1735	-
Stage 2	-	-	-	-	-	-	850	1770	-	575	1300	-
Critical Hdwy	4.62	-	-	4.82	-	-	7.54	6.54	6.94	7.54	6.54	6.94
Critical Hdwy Stg 1	-	-	-	-	-	-	6.54	5.54	-	6.54	5.54	-
Critical Hdwy Stg 2	-	-	-	-	-	-	6.54	5.54	-	6.54	5.54	-
Follow-up Hdwy	2.46	-	-	2.56	-	-	3.52	4.02	3.32	3.52	4.02	3.32
Pot Cap-1 Maneuver	260	-	-	378	-	-	31	13	412	20	13	288
Stage 1	-	-	-	-	-	-	190	249	-	91	140	-
Stage 2	-	-	-	-	-	-	322	135	-	470	230	-
Platoon blocked, %		-	-		-	-						
Mov Cap-1 Maneuver	260	-	-	378	-	-	27	13	412	20	13	288
Mov Cap-2 Maneuver	-	-	-	-	-	-	27	13	-	20	13	-
Stage 1	-	-	-	-	-	-	190	249	-	91	140	-
Stage 2	-	-	-	-	-	-	277	135	-	459	230	-

Approach	EB	WB	NB	SB
HCM Control Delay, s	0	0	14	19.5
HCM LOS			B	C

Minor Lane/Major Mvmt	NBLn1	EBL	EBT	EBR	WBL	WBT	WBR	SBLn1
Capacity (veh/h)	412	260	-	-	378	-	-	288
HCM Lane V/C Ratio	0.024	-	-	-	-	-	-	0.139
HCM Control Delay (s)	14	0	-	-	0	-	-	19.5
HCM Lane LOS	B	A	-	-	A	-	-	C
HCM 95th %tile Q(veh)	0.1	0	-	-	0	-	-	0.5

Movement	EBL	EBT	EBR	WBL	WBT	WBR	NBL	NBT	NBR	SBL	SBT	SBR
Lane Configurations												
Traffic Volume (veh/h)	0	1160	10	0	1760	20	0	0	10	0	0	10
Future Volume (Veh/h)	0	1160	10	0	1760	20	0	0	10	0	0	10
Sign Control		Free			Free			Stop			Stop	
Grade		0%			0%			0%			0%	
Peak Hour Factor	1.00	1.00	1.00	1.00	1.00	1.00	1.00	1.00	1.00	1.00	1.00	1.00
Hourly flow rate (vph)	0	1160	10	0	1760	20	0	0	10	0	0	10
Pedestrians												
Lane Width (ft)												
Walking Speed (ft/s)												
Percent Blockage												
Right turn flare (veh)												
Median type		None			None							
Median storage veh)												
Upstream signal (ft)												
pX, platoon unblocked												
vC, conflicting volume	1780			1170			2055	2945	585	2360	2940	890
vC1, stage 1 conf vol												
vC2, stage 2 conf vol												
vCu, unblocked vol	1780			1170			2055	2945	585	2360	2940	890
tC, single (s)	4.6			4.8			7.5	6.5	6.9	7.5	6.5	6.9
tC, 2 stage (s)												
tF (s)	2.5			2.6			3.5	4.0	3.3	3.5	4.0	3.3
p0 queue free %	100			100			100	100	98	100	100	97
cM capacity (veh/h)	258			432			31	15	454	18	15	286

Direction, Lane #	EB 1	EB 2	WB 1	WB 2	NB 1	SB 1
Volume Total	773	397	1173	607	10	10
Volume Left	0	0	0	0	0	0
Volume Right	0	10	0	20	10	10
cSH	1700	1700	1700	1700	454	286
Volume to Capacity	0.45	0.23	0.69	0.36	0.02	0.03
Queue Length 95th (ft)	0	0	0	0	2	3
Control Delay (s)	0.0	0.0	0.0	0.0	13.1	18.0
Lane LOS					B	C
Approach Delay (s)	0.0		0.0		13.1	18.0
Approach LOS					B	C

Intersection Summary			
Average Delay	0.1		
Intersection Capacity Utilization	54.6%	ICU Level of Service	A
Analysis Period (min)	15		

Intersection	
Int Delay, s/veh	0.1

Movement	EBL	EBT	EBR	WBL	WBT	WBR	NBL	NBT	NBR	SBL	SBT	SBR
Traffic Vol, veh/h	0	1160	10	0	1760	20	0	0	10	0	0	10
Future Vol, veh/h	0	1160	10	0	1760	20	0	0	10	0	0	10
Conflicting Peds, #/hr	0	0	0	0	0	0	0	0	0	0	0	0
Sign Control	Free	Free	Free	Free	Free	Free	Stop	Stop	Stop	Stop	Stop	Stop
RT Channelized	-	-	None	-	-	None	-	-	None	-	-	None
Storage Length	-	-	-	-	-	-	-	-	0	-	-	0
Veh in Median Storage, #	-	0	-	-	0	-	-	0	-	-	0	-
Grade, %	-	0	-	-	0	-	-	0	-	-	0	-
Peak Hour Factor	100	100	100	100	100	100	100	100	100	100	100	100
Heavy Vehicles, %	26	26	26	36	36	36	2	2	2	2	2	2
Mvmt Flow	0	1160	10	0	1760	20	0	0	10	0	0	10

Major/Minor	Major1			Major2			Minor1			Minor2		
Conflicting Flow All	1780	0	0	1170	0	0	2045	2945	585	2350	2940	890
Stage 1	-	-	-	-	-	-	1165	1165	-	1770	1770	-
Stage 2	-	-	-	-	-	-	880	1780	-	580	1170	-
Critical Hdwy	4.62	-	-	4.82	-	-	7.54	6.54	6.94	7.54	6.54	6.94
Critical Hdwy Stg 1	-	-	-	-	-	-	6.54	5.54	-	6.54	5.54	-
Critical Hdwy Stg 2	-	-	-	-	-	-	6.54	5.54	-	6.54	5.54	-
Follow-up Hdwy	2.46	-	-	2.56	-	-	3.52	4.02	3.32	3.52	4.02	3.32
Pot Cap-1 Maneuver	258	-	-	432	-	-	33	15	454	19	15	286
Stage 1	-	-	-	-	-	-	206	267	-	86	135	-
Stage 2	-	-	-	-	-	-	308	133	-	467	265	-
Platoon blocked, %		-	-		-	-						
Mov Cap-1 Maneuver	258	-	-	432	-	-	32	15	454	19	15	286
Mov Cap-2 Maneuver	-	-	-	-	-	-	32	15	-	19	15	-
Stage 1	-	-	-	-	-	-	206	267	-	86	135	-
Stage 2	-	-	-	-	-	-	297	133	-	457	265	-

Approach	EB	WB	NB	SB
HCM Control Delay, s	0	0	13.1	18
HCM LOS			B	C

Minor Lane/Major Mvmt	NBLn1	EBL	EBT	EBR	WBL	WBT	WBR	SBLn1
Capacity (veh/h)	454	258	-	-	432	-	-	286
HCM Lane V/C Ratio	0.022	-	-	-	-	-	-	0.035
HCM Control Delay (s)	13.1	0	-	-	0	-	-	18
HCM Lane LOS	B	A	-	-	A	-	-	C
HCM 95th %tile Q(veh)	0.1	0	-	-	0	-	-	0.1

Movement	EBL	EBT	EBR	WBL	WBT	WBR	NBL	NBT	NBR	SBL	SBT	SBR
Lane Configurations												
Traffic Volume (vph)	100	1070	30	10	1540	40	170	50	10	30	40	60
Future Volume (vph)	100	1070	30	10	1540	40	170	50	10	30	40	60
Ideal Flow (vphpl)	2100	2100	2100	2100	2100	2100	2100	2100	2100	2100	2100	2100
Total Lost time (s)	4.0	4.0	4.0	4.0	4.0	4.0	4.0	4.0		4.0	4.0	4.0
Lane Util. Factor	1.00	0.95	1.00	1.00	0.95	1.00	1.00	1.00		1.00	1.00	1.00
Frt	1.00	1.00	0.85	1.00	1.00	0.85	1.00	0.97		1.00	1.00	0.85
Flt Protected	0.95	1.00	1.00	0.95	1.00	1.00	0.95	1.00		0.95	1.00	1.00
Satd. Flow (prot)	1583	3167	1417	1467	2934	1312	1956	2007		1956	2059	1750
Flt Permitted	0.95	1.00	1.00	0.95	1.00	1.00	0.73	1.00		0.72	1.00	1.00
Satd. Flow (perm)	1583	3167	1417	1467	2934	1312	1505	2007		1478	2059	1750
Peak-hour factor, PHF	1.00	1.00	1.00	1.00	1.00	1.00	1.00	1.00	1.00	1.00	1.00	1.00
Adj. Flow (vph)	100	1070	30	10	1540	40	170	50	10	30	40	60
RTOR Reduction (vph)	0	0	12	0	0	17	0	8	0	0	0	47
Lane Group Flow (vph)	100	1070	18	10	1540	23	170	52	0	30	40	13
Heavy Vehicles (%)	26%	26%	26%	36%	36%	36%	2%	2%	2%	2%	2%	2%
Turn Type	Prot	NA	Perm	Prot	NA	Perm	Perm	NA		Perm	NA	Perm
Protected Phases	7	4		3	8			2			6	
Permitted Phases			4			8	2			6		6
Actuated Green, G (s)	4.0	44.4	44.4	0.8	41.2	41.2	16.0	16.0		16.0	16.0	16.0
Effective Green, g (s)	4.0	44.4	44.4	0.8	41.2	41.2	16.0	16.0		16.0	16.0	16.0
Actuated g/C Ratio	0.05	0.61	0.61	0.01	0.56	0.56	0.22	0.22		0.22	0.22	0.22
Clearance Time (s)	4.0	4.0	4.0	4.0	4.0	4.0	4.0	4.0		4.0	4.0	4.0
Vehicle Extension (s)	3.0	3.0	3.0	3.0	3.0	3.0	3.0	3.0		3.0	3.0	3.0
Lane Grp Cap (vph)	86	1920	859	16	1651	738	328	438		323	450	382
v/s Ratio Prot	c0.06	c0.34		0.01	c0.52			0.03			0.02	
v/s Ratio Perm			0.01			0.02	c0.11			0.02		0.01
v/c Ratio	1.16	0.56	0.02	0.62	0.93	0.03	0.52	0.12		0.09	0.09	0.03
Uniform Delay, d1	34.6	8.6	5.7	36.1	14.7	7.1	25.2	22.9		22.8	22.8	22.5
Progression Factor	1.00	1.00	1.00	1.00	1.00	1.00	1.00	1.00		1.00	1.00	1.00
Incremental Delay, d2	147.5	0.4	0.0	57.6	10.1	0.0	5.8	0.6		0.6	0.4	0.2
Delay (s)	182.1	8.9	5.7	93.6	24.8	7.1	31.0	23.5		23.4	23.2	22.7
Level of Service	F	A	A	F	C	A	C	C		C	C	C
Approach Delay (s)		23.3			24.8			29.0			23.0	
Approach LOS		C			C			C			C	

Intersection Summary			
HCM 2000 Control Delay	24.4	HCM 2000 Level of Service	C
HCM 2000 Volume to Capacity ratio	0.81		
Actuated Cycle Length (s)	73.2	Sum of lost time (s)	12.0
Intersection Capacity Utilization	68.7%	ICU Level of Service	C
Analysis Period (min)	15		
c Critical Lane Group			

Movement	EBL	EBT	EBR	WBL	WBT	WBR	NBL	NBT	NBR	SBL	SBT	SBR
Lane Configurations												
Traffic Volume (veh/h)	0	1090	10	0	1570	10	0	0	10	0	0	10
Future Volume (Veh/h)	0	1090	10	0	1570	10	0	0	10	0	0	10
Sign Control		Free			Free			Stop			Stop	
Grade		0%			0%			0%			0%	
Peak Hour Factor	1.00	1.00	1.00	1.00	1.00	1.00	1.00	1.00	1.00	1.00	1.00	1.00
Hourly flow rate (vph)	0	1090	10	0	1570	10	0	0	10	0	0	10
Pedestrians												
Lane Width (ft)												
Walking Speed (ft/s)												
Percent Blockage												
Right turn flare (veh)												
Median type		None			None							
Median storage veh)												
Upstream signal (ft)												
pX, platoon unblocked												
vC, conflicting volume	1580			1100			1890	2675	550	2130	2675	790
vC1, stage 1 conf vol												
vC2, stage 2 conf vol												
vCu, unblocked vol	1580			1100			1890	2675	550	2130	2675	790
tC, single (s)	4.1			4.1			7.5	6.5	6.9	7.5	6.5	6.9
tC, 2 stage (s)												
tF (s)	2.2			2.2			3.5	4.0	3.3	3.5	4.0	3.3
p0 queue free %	100			100			100	100	98	100	100	97
cM capacity (veh/h)	412			630			42	22	479	28	22	333

Direction, Lane #	EB 1	EB 2	WB 1	WB 2	NB 1	SB 1
Volume Total	727	373	1047	533	10	10
Volume Left	0	0	0	0	0	0
Volume Right	0	10	0	10	10	10
cSH	1700	1700	1700	1700	479	333
Volume to Capacity	0.43	0.22	0.62	0.31	0.02	0.03
Queue Length 95th (ft)	0	0	0	0	2	2
Control Delay (s)	0.0	0.0	0.0	0.0	12.7	16.1
Lane LOS					B	C
Approach Delay (s)	0.0		0.0		12.7	16.1
Approach LOS					B	C

Intersection Summary			
Average Delay	0.1		
Intersection Capacity Utilization	49.6%	ICU Level of Service	A
Analysis Period (min)	15		

Intersection	
Int Delay, s/veh	0.1

Movement	EBL	EBT	EBR	WBL	WBT	WBR	NBL	NBT	NBR	SBL	SBT	SBR
Traffic Vol, veh/h	0	1090	10	0	1570	10	0	0	10	0	0	10
Future Vol, veh/h	0	1090	10	0	1570	10	0	0	10	0	0	10
Conflicting Peds, #/hr	0	0	0	0	0	0	0	0	0	0	0	0
Sign Control	Free	Free	Free	Free	Free	Free	Stop	Stop	Stop	Stop	Stop	Stop
RT Channelized	-	-	None	-	-	None	-	-	None	-	-	None
Storage Length	-	-	-	-	-	-	-	-	0	-	-	0
Veh in Median Storage, #	-	0	-	-	0	-	-	0	-	-	0	-
Grade, %	-	0	-	-	0	-	-	0	-	-	0	-
Peak Hour Factor	100	100	100	100	100	100	100	100	100	100	100	100
Heavy Vehicles, %	2	2	2	2	2	2	2	2	2	2	2	2
Mvmt Flow	0	1090	10	0	1570	10	0	0	10	0	0	10

Major/Minor	Major1			Major2			Minor1			Minor2		
Conflicting Flow All	1580	0	0	1100	0	0	1880	2675	550	2120	2675	790
Stage 1	-	-	-	-	-	-	1095	1095	-	1575	1575	-
Stage 2	-	-	-	-	-	-	785	1580	-	545	1100	-
Critical Hdwy	4.14	-	-	4.14	-	-	7.54	6.54	6.94	7.54	6.54	6.94
Critical Hdwy Stg 1	-	-	-	-	-	-	6.54	5.54	-	6.54	5.54	-
Critical Hdwy Stg 2	-	-	-	-	-	-	6.54	5.54	-	6.54	5.54	-
Follow-up Hdwy	2.22	-	-	2.22	-	-	3.52	4.02	3.32	3.52	4.02	3.32
Pot Cap-1 Maneuver	412	-	-	630	-	-	44	22	479	29	22	333
Stage 1	-	-	-	-	-	-	228	288	-	115	169	-
Stage 2	-	-	-	-	-	-	352	168	-	490	286	-
Platoon blocked, %		-	-		-	-						
Mov Cap-1 Maneuver	412	-	-	630	-	-	43	22	479	28	22	333
Mov Cap-2 Maneuver	-	-	-	-	-	-	43	22	-	28	22	-
Stage 1	-	-	-	-	-	-	228	288	-	115	169	-
Stage 2	-	-	-	-	-	-	341	168	-	480	286	-

Approach	EB	WB	NB	SB
HCM Control Delay, s	0	0	12.7	16.1
HCM LOS			B	C

Minor Lane/Major Mvmt	NBLn1	EBL	EBT	EBR	WBL	WBT	WBR	SBLn1
Capacity (veh/h)	479	412	-	-	630	-	-	333
HCM Lane V/C Ratio	0.021	-	-	-	-	-	-	0.03
HCM Control Delay (s)	12.7	0	-	-	0	-	-	16.1
HCM Lane LOS	B	A	-	-	A	-	-	C
HCM 95th %tile Q(veh)	0.1	0	-	-	0	-	-	0.1

Movement	EBL	EBT	EBR	WBL	WBT	WBR	NBL	NBT	NBR	SBL	SBT	SBR
Lane Configurations												
Traffic Volume (veh/h)	0	1090	10	0	1570	10	0	0	10	0	0	20
Future Volume (Veh/h)	0	1090	10	0	1570	10	0	0	10	0	0	20
Sign Control		Free			Free			Stop			Stop	
Grade		0%			0%			0%			0%	
Peak Hour Factor	1.00	1.00	1.00	1.00	1.00	1.00	1.00	1.00	1.00	1.00	1.00	1.00
Hourly flow rate (vph)	0	1090	10	0	1570	10	0	0	10	0	0	20
Pedestrians												
Lane Width (ft)												
Walking Speed (ft/s)												
Percent Blockage												
Right turn flare (veh)												
Median type		None			None							
Median storage veh)												
Upstream signal (ft)												
pX, platoon unblocked												
vC, conflicting volume	1580			1100			1900	2675	550	2130	2675	790
vC1, stage 1 conf vol												
vC2, stage 2 conf vol												
vCu, unblocked vol	1580			1100			1900	2675	550	2130	2675	790
tC, single (s)	4.6			4.8			7.5	6.5	6.9	7.5	6.5	6.9
tC, 2 stage (s)												
tF (s)	2.5			2.6			3.5	4.0	3.3	3.5	4.0	3.3
p0 queue free %	100			100			100	100	98	100	100	94
cM capacity (veh/h)	315			465			40	22	479	28	22	333

Direction, Lane #	EB 1	EB 2	WB 1	WB 2	NB 1	SB 1
Volume Total	727	373	1047	533	10	20
Volume Left	0	0	0	0	0	0
Volume Right	0	10	0	10	10	20
cSH	1700	1700	1700	1700	479	333
Volume to Capacity	0.43	0.22	0.62	0.31	0.02	0.06
Queue Length 95th (ft)	0	0	0	0	2	5
Control Delay (s)	0.0	0.0	0.0	0.0	12.7	16.5
Lane LOS					B	C
Approach Delay (s)	0.0		0.0		12.7	16.5
Approach LOS					B	C

Intersection Summary			
Average Delay	0.2		
Intersection Capacity Utilization	49.6%	ICU Level of Service	A
Analysis Period (min)	15		

Intersection	
Int Delay, s/veh	0.2

Movement	EBL	EBT	EBR	WBL	WBT	WBR	NBL	NBT	NBR	SBL	SBT	SBR
Traffic Vol, veh/h	0	1090	10	0	1570	10	0	0	10	0	0	20
Future Vol, veh/h	0	1090	10	0	1570	10	0	0	10	0	0	20
Conflicting Peds, #/hr	0	0	0	0	0	0	0	0	0	0	0	0
Sign Control	Free	Free	Free	Free	Free	Free	Stop	Stop	Stop	Stop	Stop	Stop
RT Channelized	-	-	None	-	-	None	-	-	None	-	-	None
Storage Length	-	-	-	-	-	-	-	-	0	-	-	0
Veh in Median Storage, #	-	0	-	-	0	-	-	0	-	-	0	-
Grade, %	-	0	-	-	0	-	-	0	-	-	0	-
Peak Hour Factor	100	100	100	100	100	100	100	100	100	100	100	100
Heavy Vehicles, %	26	26	26	36	36	36	2	2	2	2	2	2
Mvmt Flow	0	1090	10	0	1570	10	0	0	10	0	0	20

Major/Minor	Major1			Major2			Minor1			Minor2		
Conflicting Flow All	1580	0	0	1100	0	0	1880	2675	550	2120	2675	790
Stage 1	-	-	-	-	-	-	1095	1095	-	1575	1575	-
Stage 2	-	-	-	-	-	-	785	1580	-	545	1100	-
Critical Hdwy	4.62	-	-	4.82	-	-	7.54	6.54	6.94	7.54	6.54	6.94
Critical Hdwy Stg 1	-	-	-	-	-	-	6.54	5.54	-	6.54	5.54	-
Critical Hdwy Stg 2	-	-	-	-	-	-	6.54	5.54	-	6.54	5.54	-
Follow-up Hdwy	2.46	-	-	2.56	-	-	3.52	4.02	3.32	3.52	4.02	3.32
Pot Cap-1 Maneuver	315	-	-	465	-	-	44	22	479	29	22	333
Stage 1	-	-	-	-	-	-	228	288	-	115	169	-
Stage 2	-	-	-	-	-	-	352	168	-	490	286	-
Platoon blocked, %		-	-		-	-						
Mov Cap-1 Maneuver	315	-	-	465	-	-	41	22	479	28	22	333
Mov Cap-2 Maneuver	-	-	-	-	-	-	41	22	-	28	22	-
Stage 1	-	-	-	-	-	-	228	288	-	115	169	-
Stage 2	-	-	-	-	-	-	331	168	-	480	286	-

Approach	EB	WB	NB	SB
HCM Control Delay, s	0	0	12.7	16.5
HCM LOS			B	C

Minor Lane/Major Mvmt	NBLn1	EBL	EBT	EBR	WBL	WBT	WBR	SBLn1
Capacity (veh/h)	479	315	-	-	465	-	-	333
HCM Lane V/C Ratio	0.021	-	-	-	-	-	-	0.06
HCM Control Delay (s)	12.7	0	-	-	0	-	-	16.5
HCM Lane LOS	B	A	-	-	A	-	-	C
HCM 95th %tile Q(veh)	0.1	0	-	-	0	-	-	0.2

Movement	EBL	EBT	EBR	WBL	WBT	WBR	NBL	NBT	NBR	SBL	SBT	SBR
Lane Configurations												
Traffic Volume (vph)	0	360	740	20	1120	0	0	0	0	30	0	450
Future Volume (vph)	0	360	740	20	1120	0	0	0	0	30	0	450
Ideal Flow (vphpl)	2100	2100	2100	2100	2100	2100	2100	2100	2100	2100	2100	2100
Total Lost time (s)		4.0	4.0	4.0	4.0						4.0	4.0
Lane Util. Factor		0.95	1.00	1.00	0.95						1.00	1.00
Frt		1.00	0.85	1.00	1.00						1.00	0.85
Flt Protected		1.00	1.00	0.95	1.00						0.95	1.00
Satd. Flow (prot)		2891	1293	1385	2771						1446	1240
Flt Permitted		1.00	1.00	0.95	1.00						0.95	1.00
Satd. Flow (perm)		2891	1293	1385	2771						1446	1240
Peak-hour factor, PHF	1.00	1.00	1.00	1.00	1.00	1.00	1.00	1.00	1.00	1.00	1.00	1.00
Adj. Flow (vph)	0	360	740	20	1120	0	0	0	0	30	0	450
RTOR Reduction (vph)	0	0	432	0	0	0	0	0	0	0	0	65
Lane Group Flow (vph)	0	360	308	20	1120	0	0	0	0	0	30	385
Heavy Vehicles (%)	38%	38%	38%	44%	44%	44%	2%	2%	2%	38%	2%	44%
Turn Type		NA	Perm	Prot	NA					Perm	NA	Perm
Protected Phases		4		3	8						6	
Permitted Phases			4							6		6
Actuated Green, G (s)		22.4	22.4	0.7	27.1						18.7	18.7
Effective Green, g (s)		22.4	22.4	0.7	27.1						18.7	18.7
Actuated g/C Ratio		0.42	0.42	0.01	0.50						0.35	0.35
Clearance Time (s)		4.0	4.0	4.0	4.0						4.0	4.0
Vehicle Extension (s)		3.0	3.0	3.0	3.0						3.0	3.0
Lane Grp Cap (vph)		1203	538	18	1395						502	431
v/s Ratio Prot		0.12		0.01	c0.40							
v/s Ratio Perm			0.24								0.02	c0.31
v/c Ratio		0.30	0.57	1.11	0.80						0.06	0.89
Uniform Delay, d1		10.5	12.0	26.5	11.1						11.7	16.6
Progression Factor		1.00	1.00	1.00	1.00						1.00	1.00
Incremental Delay, d2		0.1	1.5	250.0	3.4						0.1	20.4
Delay (s)		10.6	13.5	276.6	14.6						11.7	37.0
Level of Service		B	B	F	B						B	D
Approach Delay (s)		12.6			19.2			0.0			35.4	
Approach LOS		B			B			A			D	

Intersection Summary			
HCM 2000 Control Delay	19.4	HCM 2000 Level of Service	B
HCM 2000 Volume to Capacity ratio	0.92		
Actuated Cycle Length (s)	53.8	Sum of lost time (s)	12.0
Intersection Capacity Utilization	59.9%	ICU Level of Service	B
Analysis Period (min)	15		
c Critical Lane Group			

Movement	EBL	EBT	EBR	WBL	WBT	WBR	NBL	NBT	NBR	SBL	SBT	SBR
Lane Configurations												
Traffic Volume (vph)	0	90	290	0	350	30	820	0	10	0	0	0
Future Volume (vph)	0	90	290	0	350	30	820	0	10	0	0	0
Ideal Flow (vphpl)	2100	2100	2100	2100	2100	2100	2100	2100	2100	2100	2100	2100
Total Lost time (s)		4.0	4.0		4.0		4.0		4.0			
Lane Util. Factor		0.95	1.00		0.95		1.00		1.00			
Frt		1.00	0.85		0.99		1.00		0.85			
Flt Protected		1.00	1.00		1.00		0.95		1.00			
Satd. Flow (prot)		2891	1293		2738		1385		1750			
Flt Permitted		1.00	1.00		1.00		0.95		1.00			
Satd. Flow (perm)		2891	1293		2738		1385		1750			
Peak-hour factor, PHF	1.00	1.00	1.00	1.00	1.00	1.00	1.00	1.00	1.00	1.00	1.00	1.00
Adj. Flow (vph)	0	90	290	0	350	30	820	0	10	0	0	0
RTOR Reduction (vph)	0	0	227	0	9	0	0	0	3	0	0	0
Lane Group Flow (vph)	0	90	63	0	371	0	820	0	7	0	0	0
Heavy Vehicles (%)	38%	38%	38%	44%	44%	44%	44%	2%	2%	2%	2%	2%
Parking (#/hr)											0	
Turn Type		NA	Perm		NA		Prot		Perm			
Protected Phases		4			8		5					
Permitted Phases			4						2			
Actuated Green, G (s)		13.2	13.2		13.2		39.7		39.7			
Effective Green, g (s)		13.2	13.2		13.2		39.7		39.7			
Actuated g/C Ratio		0.22	0.22		0.22		0.65		0.65			
Clearance Time (s)		4.0	4.0		4.0		4.0		4.0			
Vehicle Extension (s)		3.0	3.0		3.0		3.0		3.0			
Lane Grp Cap (vph)		626	280		593		902		1140			
v/s Ratio Prot		0.03			c0.14		c0.59					
v/s Ratio Perm			0.05						0.00			
v/c Ratio		0.14	0.22		0.62		0.91		0.01			
Uniform Delay, d1		19.3	19.6		21.6		9.1		3.7			
Progression Factor		1.00	1.00		1.00		1.00		1.00			
Incremental Delay, d2		0.1	0.4		2.1		12.8		0.0			
Delay (s)		19.4	20.0		23.7		21.8		3.7			
Level of Service		B	C		C		C		A			
Approach Delay (s)		19.9			23.7			21.6			0.0	
Approach LOS		B			C			C			A	

Intersection Summary			
HCM 2000 Control Delay	21.7	HCM 2000 Level of Service	C
HCM 2000 Volume to Capacity ratio	0.84		
Actuated Cycle Length (s)	60.9	Sum of lost time (s)	8.0
Intersection Capacity Utilization	57.4%	ICU Level of Service	B
Analysis Period (min)	15		

c Critical Lane Group

Intersection	
Int Delay, s/veh	818.5

Movement	EBL	EBT	WBT	WBR	SBL	SBR
Vol, veh/h	160	980	1130	150	170	330
Conflicting Peds, #/hr	0	0	0	0	0	0
Sign Control	Free	Free	Free	Free	Stop	Stop
RT Channelized	-	None	-	None	-	None
Storage Length	105	-	-	450	0	-
Veh in Median Storage, #	-	0	0	-	0	-
Grade, %	-	0	0	-	0	-
Peak Hour Factor	87	87	87	87	87	87
Heavy Vehicles, %	35	35	41	41	2	2
Mvmt Flow	184	1126	1299	172	195	379

Major/Minor	Major1		Major2		Minor2	
Conflicting Flow All	1299	0	-	0	2230	649
Stage 1	-	-	-	-	1299	-
Stage 2	-	-	-	-	931	-
Critical Hdwy	4.8	-	-	-	6.84	6.94
Critical Hdwy Stg 1	-	-	-	-	5.84	-
Critical Hdwy Stg 2	-	-	-	-	5.84	-
Follow-up Hdwy	2.55	-	-	-	3.52	3.32
Pot Cap-1 Maneuver	382	-	-	-	~ 36	412
Stage 1	-	-	-	-	220	-
Stage 2	-	-	-	-	344	-
Platoon blocked, %		-	-	-		
Mov Cap-1 Maneuver	382	-	-	-	~ 19	412
Mov Cap-2 Maneuver	-	-	-	-	~ 19	-
Stage 1	-	-	-	-	220	-
Stage 2	-	-	-	-	~ 178	-

Approach	EB	WB	SB
HCM Control Delay, s	3.2	0	$ 4772.8
HCM LOS			F

Minor Lane/Major Mvmt	EBL	EBT	WBT	WBR	SBLn1
Capacity (veh/h)	382	-	-	-	51
HCM Lane V/C Ratio	0.481	-	-	-	11.269
HCM Control Delay (s)	22.9	-	-	-	$ 4772.8
HCM Lane LOS	C	-	-	-	F
HCM 95th %tile Q(veh)	2.5	-	-	-	68.6

Notes

~: Volume exceeds capacity $: Delay exceeds 300s +: Computation Not Defined *: All major volume in platoon

Intersection	
Int Delay, s/veh	583

Movement	EBT	EBR	WBL	WBT	NBL	NBR
Vol, veh/h	780	240	150	780	160	20
Conflicting Peds, #/hr	0	0	0	0	0	0
Sign Control	Free	Free	Free	Free	Stop	Stop
RT Channelized	-	None	-	None	-	None
Storage Length	-	-	450	-	0	-
Veh in Median Storage, #	0	-	-	0	0	-
Grade, %	0	-	-	0	0	-
Peak Hour Factor	79	79	79	79	79	79
Heavy Vehicles, %	35	35	41	41	2	2
Mvmt Flow	987	304	190	987	203	25

Major/Minor	Major1		Major2		Minor1	
Conflicting Flow All	0	0	1291	0	2506	646
Stage 1	-	-	-	-	1139	-
Stage 2	-	-	-	-	1367	-
Critical Hdwy	-	-	4.92	-	6.63	6.93
Critical Hdwy Stg 1	-	-	-	-	5.83	-
Critical Hdwy Stg 2	-	-	-	-	5.43	-
Follow-up Hdwy	-	-	2.61	-	3.519	3.319
Pot Cap-1 Maneuver	-	-	364	-	~ 27	415
Stage 1	-	-	-	-	268	-
Stage 2	-	-	-	-	236	-
Platoon blocked, %	-	-		-		
Mov Cap-1 Maneuver	-	-	364	-	~ 13	415
Mov Cap-2 Maneuver	-	-	-	-	~ 13	-
Stage 1	-	-	-	-	268	-
Stage 2	-	-	-	-	~ 113	-

Approach	EB	WB	NB
HCM Control Delay, s	0	4.1	$ 6877.8
HCM LOS			F

Minor Lane/Major Mvmt	NBLn1	EBT	EBR	WBL	WBT
Capacity (veh/h)	15	-	-	364	-
HCM Lane V/C Ratio	15.19	-	-	0.522	-
HCM Control Delay (s)	$ 6877.8	-	-	25.2	-
HCM Lane LOS	F	-	-	D	-
HCM 95th %tile Q(veh)	29.5	-	-	2.9	-

Notes

~: Volume exceeds capacity $: Delay exceeds 300s +: Computation Not Defined *: All major volume in platoon

Intersection	
Int Delay, s/veh	2.8

Movement	EBL	EBT	WBT	WBR	SBL	SBR
Vol, veh/h	60	740	910	20	10	20
Conflicting Peds, #/hr	0	0	0	0	0	0
Sign Control	Free	Free	Free	Free	Stop	Stop
RT Channelized	-	None	-	None	-	None
Storage Length	450	-	-	-	0	-
Veh in Median Storage, #	-	0	0	-	0	-
Grade, %	-	0	0	-	0	-
Peak Hour Factor	72	72	72	72	72	72
Heavy Vehicles, %	30	30	38	38	2	2
Mvmt Flow	83	1028	1264	28	14	28

Major/Minor	Major1		Major2		Minor2	
Conflicting Flow All	1292	0	-	0	2472	1278
Stage 1	-	-	-	-	1278	-
Stage 2	-	-	-	-	1194	-
Critical Hdwy	4.4	-	-	-	6.42	6.22
Critical Hdwy Stg 1	-	-	-	-	5.42	-
Critical Hdwy Stg 2	-	-	-	-	5.42	-
Follow-up Hdwy	2.47	-	-	-	3.518	3.318
Pot Cap-1 Maneuver	453	-	-	-	33	203
Stage 1	-	-	-	-	262	-
Stage 2	-	-	-	-	287	-
Platoon blocked, %		-	-	-		
Mov Cap-1 Maneuver	453	-	-	-	27	203
Mov Cap-2 Maneuver	-	-	-	-	27	-
Stage 1	-	-	-	-	262	-
Stage 2	-	-	-	-	234	-

Approach	EB	WB	SB
HCM Control Delay, s	1.1	0	133.2
HCM LOS			F

Minor Lane/Major Mvmt	EBL	EBT	WBT	WBR	SBLn1
Capacity (veh/h)	453	-	-	-	64
HCM Lane V/C Ratio	0.184	-	-	-	0.651
HCM Control Delay (s)	14.7	-	-	-	133.2
HCM Lane LOS	B	-	-	-	F
HCM 95th %tile Q(veh)	0.7	-	-	-	2.8

Intersection	
Int Delay, s/veh	4.1

Movement	EBL	EBT	WBT	WBR	SBL	SBR
Vol, veh/h	230	530	520	10	10	150
Conflicting Peds, #/hr	0	0	0	0	0	0
Sign Control	Free	Free	Free	Free	Stop	Stop
RT Channelized	-	None	-	None	-	None
Storage Length	450	-	-	-	0	-
Veh in Median Storage, #	-	0	0	-	0	-
Grade, %	-	0	0	-	0	-
Peak Hour Factor	92	92	92	92	92	92
Heavy Vehicles, %	30	30	38	38	2	2
Mvmt Flow	250	576	565	11	11	163

Major/Minor	Major1		Major2		Minor2	
Conflicting Flow All	576	0	-	0	1647	571
Stage 1	-	-	-	-	571	-
Stage 2	-	-	-	-	1076	-
Critical Hdwy	4.4	-	-	-	6.42	6.22
Critical Hdwy Stg 1	-	-	-	-	5.42	-
Critical Hdwy Stg 2	-	-	-	-	5.42	-
Follow-up Hdwy	2.47	-	-	-	3.518	3.318
Pot Cap-1 Maneuver	873	-	-	-	109	520
Stage 1	-	-	-	-	565	-
Stage 2	-	-	-	-	327	-
Platoon blocked, %		-	-	-		
Mov Cap-1 Maneuver	873	-	-	-	78	520
Mov Cap-2 Maneuver	-	-	-	-	78	-
Stage 1	-	-	-	-	565	-
Stage 2	-	-	-	-	233	-

Approach	EB	WB	SB
HCM Control Delay, s	3.3	0	21.9
HCM LOS			C

Minor Lane/Major Mvmt	EBL	EBT	WBT	WBR	SBLn1
Capacity (veh/h)	873	-	-	-	384
HCM Lane V/C Ratio	0.286	-	-	-	0.453
HCM Control Delay (s)	10.8	-	-	-	21.9
HCM Lane LOS	B	-	-	-	C
HCM 95th %tile Q(veh)	1.2	-	-	-	2.3

Intersection	
Int Delay, s/veh	5

Movement	EBL	EBT	WBT	WBR	SBL	SBR
Vol, veh/h	150	380	250	10	10	290
Conflicting Peds, #/hr	0	0	0	0	0	0
Sign Control	Free	Free	Free	Free	Stop	Stop
RT Channelized	-	None	-	None	-	None
Storage Length	450	-	-	-	0	-
Veh in Median Storage, #	-	0	0	-	0	-
Grade, %	-	0	0	-	0	-
Peak Hour Factor	95	95	95	95	95	95
Heavy Vehicles, %	30	30	37	37	2	2
Mvmt Flow	158	400	263	11	11	305

Major/Minor	Major1		Major2		Minor2	
Conflicting Flow All	274	0	-	0	984	268
Stage 1	-	-	-	-	268	-
Stage 2	-	-	-	-	716	-
Critical Hdwy	4.4	-	-	-	6.42	6.22
Critical Hdwy Stg 1	-	-	-	-	5.42	-
Critical Hdwy Stg 2	-	-	-	-	5.42	-
Follow-up Hdwy	2.47	-	-	-	3.518	3.318
Pot Cap-1 Maneuver	1144	-	-	-	275	771
Stage 1	-	-	-	-	777	-
Stage 2	-	-	-	-	484	-
Platoon blocked, %		-	-	-		
Mov Cap-1 Maneuver	1144	-	-	-	237	771
Mov Cap-2 Maneuver	-	-	-	-	237	-
Stage 1	-	-	-	-	777	-
Stage 2	-	-	-	-	417	-

Approach	EB	WB	SB
HCM Control Delay, s	2.4	0	13.9
HCM LOS			B

Minor Lane/Major Mvmt	EBL	EBT	WBT	WBR	SBLn1
Capacity (veh/h)	1144	-	-	-	717
HCM Lane V/C Ratio	0.138	-	-	-	0.44
HCM Control Delay (s)	8.7	-	-	-	13.9
HCM Lane LOS	A	-	-	-	B
HCM 95th %tile Q(veh)	0.5	-	-	-	2.3

Intersection	
Int Delay, s/veh	4.1

Movement	EBL	EBT	WBT	WBR	SBL	SBR
Vol, veh/h	10	390	260	160	180	10
Conflicting Peds, #/hr	0	0	0	0	0	0
Sign Control	Free	Free	Free	Free	Stop	Stop
RT Channelized	-	None	-	None	-	None
Storage Length	-	-	-	450	0	-
Veh in Median Storage, #	-	0	0	-	0	-
Grade, %	-	0	0	-	0	-
Peak Hour Factor	97	97	97	97	97	97
Heavy Vehicles, %	30	30	37	37	2	2
Mvmt Flow	10	402	268	165	186	10

Major/Minor	Major1		Major2		Minor2	
Conflicting Flow All	268	0	-	0	691	268
Stage 1	-	-	-	-	268	-
Stage 2	-	-	-	-	423	-
Critical Hdwy	4.4	-	-	-	6.42	6.22
Critical Hdwy Stg 1	-	-	-	-	5.42	-
Critical Hdwy Stg 2	-	-	-	-	5.42	-
Follow-up Hdwy	2.47	-	-	-	3.518	3.318
Pot Cap-1 Maneuver	1150	-	-	-	410	771
Stage 1	-	-	-	-	777	-
Stage 2	-	-	-	-	661	-
Platoon blocked, %		-	-	-		
Mov Cap-1 Maneuver	1150	-	-	-	405	771
Mov Cap-2 Maneuver	-	-	-	-	405	-
Stage 1	-	-	-	-	777	-
Stage 2	-	-	-	-	654	-

Approach	EB	WB	SB
HCM Control Delay, s	0.2	0	21.2
HCM LOS			C

Minor Lane/Major Mvmt	EBL	EBT	WBT	WBR	SBLn1
Capacity (veh/h)	1150	-	-	-	415
HCM Lane V/C Ratio	0.009	-	-	-	0.472
HCM Control Delay (s)	8.2	0	-	-	21.2
HCM Lane LOS	A	A	-	-	C
HCM 95th %tile Q(veh)	0	-	-	-	2.5

Intersection	
Int Delay, s/veh	0.8

Movement	EBL	EBT	EBR	WBL	WBT	WBR	NBL	NBT	NBR	SBL	SBT	SBR
Vol, veh/h	70	460	390	90	410	10	100	100	60	10	290	10
Conflicting Peds, #/hr	0	0	0	0	0	0	0	0	0	0	0	0
Sign Control	Free	Free	Free	Free	Free	Free	Stop	Stop	Stop	Stop	Stop	Stop
RT Channelized	-	-	None	-	-	None	-	-	None	-	-	None
Storage Length	-	-	450	450	-	-	-	-	-	-	-	-
Veh in Median Storage, #	-	0	-	-	0	-	-	0	-	-	0	-
Grade, %	-	0	-	-	0	-	-	0	-	-	0	-
Peak Hour Factor	79	79	79	79	79	79	79	79	79	79	79	79
Heavy Vehicles, %	30	30	30	39	39	39	2	2	2	2	2	2
Mvmt Flow	89	582	494	114	519	13	127	127	76	13	367	13

Major/Minor	Major1			Major2			Minor1			Minor2		
Conflicting Flow All	532	0	0	582	0	0	1702	1518	582	1614	1512	525
Stage 1	-	-	-	-	-	-	759	759	-	753	753	-
Stage 2	-	-	-	-	-	-	943	759	-	861	759	-
Critical Hdwy	4.4	-	-	4.49	-	-	7.12	6.52	6.22	7.12	6.52	6.22
Critical Hdwy Stg 1	-	-	-	-	-	-	6.12	5.52	-	6.12	5.52	-
Critical Hdwy Stg 2	-	-	-	-	-	-	6.12	5.52	-	6.12	5.52	-
Follow-up Hdwy	2.47	-	-	2.551	-	-	3.518	4.018	3.318	3.518	4.018	3.318
Pot Cap-1 Maneuver	908	-	-	833	-	-	~ 72	~ 119	513	84	~ 120	552
Stage 1	-	-	-	-	-	-	399	415	-	402	417	-
Stage 2	-	-	-	-	-	-	315	415	-	350	415	-
Platoon blocked, %		-	-		-	-						
Mov Cap-1 Maneuver	908	-	-	833	-	-	-	~ 74	513	-	~ 74	552
Mov Cap-2 Maneuver	-	-	-	-	-	-	-	~ 74	-	-	~ 74	-
Stage 1	-	-	-	-	-	-	286	298	-	289	~ 360	-
Stage 2	-	-	-	-	-	-	-	358	-	123	~ 298	-

Approach	EB	WB	NB	SB
HCM Control Delay, s	0.7	1.8		
HCM LOS			-	-

Minor Lane/Major Mvmt	NBLn1	EBL	EBT	EBR	WBL	WBT	WBR	SBLn1
Capacity (veh/h)	-	908	-	-	833	-	-	-
HCM Lane V/C Ratio	-	0.098	-	-	0.137	-	-	-
HCM Control Delay (s)	-	9.4	0	-	10	-	-	-
HCM Lane LOS	-	A	A	-	B	-	-	-
HCM 95th %tile Q(veh)	-	0.3	-	-	0.5	-	-	-

Notes

~: Volume exceeds capacity $: Delay exceeds 300s +: Computation Not Defined *: All major volume in platoon

Intersection	
Int Delay, s/veh	84

Movement	EBL	EBT	WBT	WBR	SBL	SBR
Vol, veh/h	20	500	480	160	240	30
Conflicting Peds, #/hr	0	0	0	0	0	0
Sign Control	Free	Free	Free	Free	Stop	Stop
RT Channelized	-	None	-	None	-	None
Storage Length	-	-	-	450	0	-
Veh in Median Storage, #	-	0	0	-	0	-
Grade, %	-	0	0	-	0	-
Peak Hour Factor	79	79	79	79	79	79
Heavy Vehicles, %	30	30	39	39	2	2
Mvmt Flow	25	633	608	203	304	38

Major/Minor	Major1		Major2		Minor2	
Conflicting Flow All	608	0	-	0	1292	608
Stage 1	-	-	-	-	608	-
Stage 2	-	-	-	-	684	-
Critical Hdwy	4.4	-	-	-	6.42	6.22
Critical Hdwy Stg 1	-	-	-	-	5.42	-
Critical Hdwy Stg 2	-	-	-	-	5.42	-
Follow-up Hdwy	2.47	-	-	-	3.518	3.318
Pot Cap-1 Maneuver	848	-	-	-	~ 180	496
Stage 1	-	-	-	-	543	-
Stage 2	-	-	-	-	501	-
Platoon blocked, %		-	-	-		
Mov Cap-1 Maneuver	848	-	-	-	~ 172	496
Mov Cap-2 Maneuver	-	-	-	-	~ 172	-
Stage 1	-	-	-	-	543	-
Stage 2	-	-	-	-	478	-

Approach	EB	WB	SB
HCM Control Delay, s	0.4	0	$ 444.3
HCM LOS			F

Minor Lane/Major Mvmt	EBL	EBT	WBT	WBR	SBLn1
Capacity (veh/h)	848	-	-	-	185
HCM Lane V/C Ratio	0.03	-	-	-	1.847
HCM Control Delay (s)	9.4	0	-	-	$ 444.3
HCM Lane LOS	A	A	-	-	F
HCM 95th %tile Q(veh)	0.1	-	-	-	24.8

Notes

~: Volume exceeds capacity $: Delay exceeds 300s +: Computation Not Defined *: All major volume in platoon

Intersection	
Int Delay, s/veh	1.7

Movement	EBL	EBT	WBT	WBR	SBL	SBR
Vol, veh/h	20	440	530	10	50	20
Conflicting Peds, #/hr	0	0	0	0	0	0
Sign Control	Free	Free	Free	Free	Stop	Stop
RT Channelized	-	None	-	None	-	None
Storage Length	-	-	-	-	0	-
Veh in Median Storage, #	-	0	0	-	0	-
Grade, %	-	0	0	-	0	-
Peak Hour Factor	92	92	92	92	92	92
Heavy Vehicles, %	33	33	41	41	2	2
Mvmt Flow	22	478	576	11	54	22

Major/Minor	Major1		Major2		Minor2	
Conflicting Flow All	587	0	-	0	1104	582
Stage 1	-	-	-	-	582	-
Stage 2	-	-	-	-	522	-
Critical Hdwy	4.43	-	-	-	6.42	6.22
Critical Hdwy Stg 1	-	-	-	-	5.42	-
Critical Hdwy Stg 2	-	-	-	-	5.42	-
Follow-up Hdwy	2.497	-	-	-	3.518	3.318
Pot Cap-1 Maneuver	852	-	-	-	234	513
Stage 1	-	-	-	-	559	-
Stage 2	-	-	-	-	595	-
Platoon blocked, %		-	-	-		
Mov Cap-1 Maneuver	852	-	-	-	226	513
Mov Cap-2 Maneuver	-	-	-	-	226	-
Stage 1	-	-	-	-	559	-
Stage 2	-	-	-	-	574	-

Approach	EB	WB	SB
HCM Control Delay, s	0.4	0	23.6
HCM LOS			C

Minor Lane/Major Mvmt	EBL	EBT	WBT	WBR	SBLn1
Capacity (veh/h)	852	-	-	-	269
HCM Lane V/C Ratio	0.026	-	-	-	0.283
HCM Control Delay (s)	9.3	0	-	-	23.6
HCM Lane LOS	A	A	-	-	C
HCM 95th %tile Q(veh)	0.1	-	-	-	1.1

Intersection	
Int Delay, s/veh	3.4

Movement	EBL	EBT	EBR	WBL	WBT	WBR	NBL	NBT	NBR	SBL	SBT	SBR
Vol, veh/h	10	260	140	60	520	10	20	10	40	10	10	10
Conflicting Peds, #/hr	0	0	0	0	0	0	0	0	0	0	0	0
Sign Control	Free	Free	Free	Free	Free	Free	Stop	Stop	Stop	Stop	Stop	Stop
RT Channelized	-	-	None	-	-	None	-	-	None	-	-	None
Storage Length	-	-	450	-	-	-	-	-	-	-	-	-
Veh in Median Storage, #	-	0	-	-	0	-	-	0	-	-	0	-
Grade, %	-	0	-	-	0	-	-	0	-	-	0	-
Peak Hour Factor	74	74	74	74	74	74	74	74	74	74	74	74
Heavy Vehicles, %	33	33	33	41	41	41	2	2	2	2	2	2
Mvmt Flow	14	351	189	81	703	14	27	14	54	14	14	14

Major/Minor	Major1			Major2			Minor1			Minor2		
Conflicting Flow All	716	0	0	351	0	0	1263	1256	351	1284	1250	709
Stage 1	-	-	-	-	-	-	378	378	-	872	872	-
Stage 2	-	-	-	-	-	-	885	878	-	412	378	-
Critical Hdwy	4.43	-	-	4.51	-	-	7.12	6.52	6.22	7.12	6.52	6.22
Critical Hdwy Stg 1	-	-	-	-	-	-	6.12	5.52	-	6.12	5.52	-
Critical Hdwy Stg 2	-	-	-	-	-	-	6.12	5.52	-	6.12	5.52	-
Follow-up Hdwy	2.497	-	-	2.569	-	-	3.518	4.018	3.318	3.518	4.018	3.318
Pot Cap-1 Maneuver	758	-	-	1021	-	-	147	171	692	142	173	434
Stage 1	-	-	-	-	-	-	644	615	-	345	368	-
Stage 2	-	-	-	-	-	-	340	366	-	617	615	-
Platoon blocked, %		-	-		-	-						
Mov Cap-1 Maneuver	758	-	-	1021	-	-	117	144	692	107	146	434
Mov Cap-2 Maneuver	-	-	-	-	-	-	117	144	-	107	146	-
Stage 1	-	-	-	-	-	-	627	598	-	336	319	-
Stage 2	-	-	-	-	-	-	274	318	-	541	598	-

Approach	EB	WB	NB	SB
HCM Control Delay, s	0.2	0.9	30.3	34.5
HCM LOS			D	D

Minor Lane/Major Mvmt	NBLn1	EBL	EBT	EBR	WBL	WBT	WBR	SBLn1
Capacity (veh/h)	235	758	-	-	1021	-	-	162
HCM Lane V/C Ratio	0.403	0.018	-	-	0.079	-	-	0.25
HCM Control Delay (s)	30.3	9.8	0	-	8.8	0	-	34.5
HCM Lane LOS	D	A	A	-	A	A	-	D
HCM 95th %tile Q(veh)	1.8	0.1	-	-	0.3	-	-	0.9

Intersection	
Int Delay, s/veh	4.2

Movement	EBL	EBT	EBR	WBL	WBT	WBR	NBL	NBT	NBR	SBL	SBT	SBR
Vol, veh/h	10	280	10	10	540	10	10	10	10	50	10	20
Conflicting Peds, #/hr	0	0	0	0	0	0	0	0	0	0	0	0
Sign Control	Free	Free	Free	Free	Free	Free	Stop	Stop	Stop	Stop	Stop	Stop
RT Channelized	-	-	None	-	-	None	-	-	None	-	-	None
Storage Length	-	-	-	-	-	-	-	-	-	-	-	-
Veh in Median Storage, #	-	0	-	-	0	-	-	0	-	-	0	-
Grade, %	-	0	-	-	0	-	-	0	-	-	0	-
Peak Hour Factor	79	79	79	79	79	79	79	79	79	79	79	79
Heavy Vehicles, %	31	31	31	39	39	39	2	2	2	2	2	2
Mvmt Flow	13	354	13	13	684	13	13	13	13	63	13	25

Major/Minor	Major1			Major2			Minor1			Minor2		
Conflicting Flow All	696	0	0	367	0	0	1120	1108	361	1114	1107	690
Stage 1	-	-	-	-	-	-	386	386	-	715	715	-
Stage 2	-	-	-	-	-	-	734	722	-	399	392	-
Critical Hdwy	4.41	-	-	4.49	-	-	7.12	6.52	6.22	7.12	6.52	6.22
Critical Hdwy Stg 1	-	-	-	-	-	-	6.12	5.52	-	6.12	5.52	-
Critical Hdwy Stg 2	-	-	-	-	-	-	6.12	5.52	-	6.12	5.52	-
Follow-up Hdwy	2.479	-	-	2.551	-	-	3.518	4.018	3.318	3.518	4.018	3.318
Pot Cap-1 Maneuver	779	-	-	1014	-	-	184	210	684	185	210	445
Stage 1	-	-	-	-	-	-	637	610	-	422	434	-
Stage 2	-	-	-	-	-	-	412	431	-	627	606	-
Platoon blocked, %		-	-		-	-						
Mov Cap-1 Maneuver	779	-	-	1014	-	-	160	201	684	167	201	445
Mov Cap-2 Maneuver	-	-	-	-	-	-	160	201	-	167	201	-
Stage 1	-	-	-	-	-	-	624	597	-	413	425	-
Stage 2	-	-	-	-	-	-	369	422	-	590	593	-

Approach	EB	WB	NB	SB
HCM Control Delay, s	0.3	0.2	23.2	39.2
HCM LOS			C	E

Minor Lane/Major Mvmt	NBLn1	EBL	EBT	EBR	WBL	WBT	WBR	SBLn1
Capacity (veh/h)	236	779	-	-	1014	-	-	203
HCM Lane V/C Ratio	0.161	0.016	-	-	0.012	-	-	0.499
HCM Control Delay (s)	23.2	9.7	0	-	8.6	0	-	39.2
HCM Lane LOS	C	A	A	-	A	A	-	E
HCM 95th %tile Q(veh)	0.6	0.1	-	-	0	-	-	2.5

Intersection	
Int Delay, s/veh	148.3

Movement	EBL	EBT	EBR	WBL	WBT	WBR	NBL	NBT	NBR	SBL	SBT	SBR
Vol, veh/h	20	270	50	10	430	70	20	20	10	160	40	130
Conflicting Peds, #/hr	0	0	0	0	0	0	0	0	0	0	0	0
Sign Control	Free	Free	Free	Free	Free	Free	Stop	Stop	Stop	Stop	Stop	Stop
RT Channelized	-	-	None	-	-	None	-	-	None	-	-	None
Storage Length	-	-	-	-	-	450	-	-	-	-	-	-
Veh in Median Storage, #	-	0	-	-	0	-	-	0	-	-	0	-
Grade, %	-	0	-	-	0	-	-	0	-	-	0	-
Peak Hour Factor	72	72	72	72	72	72	72	72	72	72	72	72
Heavy Vehicles, %	31	31	31	39	39	39	2	2	2	2	2	2
Mvmt Flow	28	375	69	14	597	97	28	28	14	222	56	181

Major/Minor	Major1			Major2			Minor1			Minor2		
Conflicting Flow All	597	0	0	444	0	0	1208	1090	410	1111	1125	597
Stage 1	-	-	-	-	-	-	465	465	-	625	625	-
Stage 2	-	-	-	-	-	-	743	625	-	486	500	-
Critical Hdwy	4.41	-	-	4.49	-	-	7.12	6.52	6.22	7.12	6.52	6.22
Critical Hdwy Stg 1	-	-	-	-	-	-	6.12	5.52	-	6.12	5.52	-
Critical Hdwy Stg 2	-	-	-	-	-	-	6.12	5.52	-	6.12	5.52	-
Follow-up Hdwy	2.479	-	-	2.551	-	-	3.518	4.018	3.318	3.518	4.018	3.318
Pot Cap-1 Maneuver	852	-	-	945	-	-	160	215	642	~ 186	205	503
Stage 1	-	-	-	-	-	-	578	563	-	473	477	-
Stage 2	-	-	-	-	-	-	407	477	-	563	543	-
Platoon blocked, %		-	-		-	-						
Mov Cap-1 Maneuver	852	-	-	945	-	-	76	200	642	~ 154	191	503
Mov Cap-2 Maneuver	-	-	-	-	-	-	76	200	-	~ 154	191	-
Stage 1	-	-	-	-	-	-	553	538	-	452	465	-
Stage 2	-	-	-	-	-	-	224	465	-	499	519	-

Approach	EB	WB	NB	SB
HCM Control Delay, s	0.6	0.2	59.2	$ 542.9
HCM LOS			F	F

Minor Lane/Major Mvmt	NBLn1	EBL	EBT	EBR	WBL	WBT	WBR	SBLn1
Capacity (veh/h)	132	852	-	-	945	-	-	219
HCM Lane V/C Ratio	0.526	0.033	-	-	0.015	-	-	2.093
HCM Control Delay (s)	59.2	9.4	0	-	8.9	0	-	$ 542.9
HCM Lane LOS	F	A	A	-	A	A	-	F
HCM 95th %tile Q(veh)	2.5	0.1	-	-	0	-	-	34.8

Notes

~: Volume exceeds capacity $: Delay exceeds 300s +: Computation Not Defined *: All major volume in platoon

Intersection	
Int Delay, s/veh	5.9

Movement	EBL	EBT	EBR	WBL	WBT	WBR	NBL	NBT	NBR	SBL	SBT	SBR
Vol, veh/h	10	400	10	10	490	10	10	10	10	50	20	10
Conflicting Peds, #/hr	0	0	0	0	0	0	0	0	0	0	0	0
Sign Control	Free	Free	Free	Free	Free	Free	Stop	Stop	Stop	Stop	Stop	Stop
RT Channelized	-	-	None	-	-	None	-	-	None	-	-	None
Storage Length	-	-	-	-	-	-	-	-	-	-	-	-
Veh in Median Storage, #	-	0	-	-	0	-	-	0	-	-	0	-
Grade, %	-	0	-	-	0	-	-	0	-	-	0	-
Peak Hour Factor	77	77	77	77	77	77	77	77	77	77	77	77
Heavy Vehicles, %	29	29	29	36	36	36	2	2	2	2	2	2
Mvmt Flow	13	519	13	13	636	13	13	13	13	65	26	13

Major/Minor	Major1			Major2			Minor1			Minor2		
Conflicting Flow All	649	0	0	532	0	0	1240	1227	526	1234	1227	643
Stage 1	-	-	-	-	-	-	552	552	-	669	669	-
Stage 2	-	-	-	-	-	-	688	675	-	565	558	-
Critical Hdwy	4.39	-	-	4.46	-	-	7.12	6.52	6.22	7.12	6.52	6.22
Critical Hdwy Stg 1	-	-	-	-	-	-	6.12	5.52	-	6.12	5.52	-
Critical Hdwy Stg 2	-	-	-	-	-	-	6.12	5.52	-	6.12	5.52	-
Follow-up Hdwy	2.461	-	-	2.524	-	-	3.518	4.018	3.318	3.518	4.018	3.318
Pot Cap-1 Maneuver	821	-	-	884	-	-	152	178	552	153	178	473
Stage 1	-	-	-	-	-	-	518	515	-	447	456	-
Stage 2	-	-	-	-	-	-	436	453	-	510	512	-
Platoon blocked, %		-	-		-	-						
Mov Cap-1 Maneuver	821	-	-	884	-	-	126	170	552	136	170	473
Mov Cap-2 Maneuver	-	-	-	-	-	-	126	170	-	136	170	-
Stage 1	-	-	-	-	-	-	506	503	-	437	446	-
Stage 2	-	-	-	-	-	-	390	443	-	474	500	-

Approach	EB	WB	NB	SB
HCM Control Delay, s	0.2	0.2	28.5	63.3
HCM LOS			D	F

Minor Lane/Major Mvmt	NBLn1	EBL	EBT	EBR	WBL	WBT	WBR	SBLn1
Capacity (veh/h)	192	821	-	-	884	-	-	158
HCM Lane V/C Ratio	0.203	0.016	-	-	0.015	-	-	0.658
HCM Control Delay (s)	28.5	9.5	0	-	9.1	0	-	63.3
HCM Lane LOS	D	A	A	-	A	A	-	F
HCM 95th %tile Q(veh)	0.7	0	-	-	0	-	-	3.7

Intersection	
Int Delay, s/veh	29.3

Movement	EBL	EBT	EBR	WBL	WBT	WBR	NBL	NBT	NBR	SBL	SBT	SBR
Vol, veh/h	40	430	20	20	470	50	10	50	20	40	80	50
Conflicting Peds, #/hr	0	0	0	0	0	0	0	0	0	0	0	0
Sign Control	Free	Free	Free	Free	Free	Free	Stop	Stop	Stop	Stop	Stop	Stop
RT Channelized	-	-	None	-	-	None	-	-	None	-	-	None
Storage Length	-	-	-	-	-	450	-	-	-	-	-	-
Veh in Median Storage, #	-	0	-	-	0	-	-	0	-	-	0	-
Grade, %	-	0	-	-	0	-	-	0	-	-	0	-
Peak Hour Factor	85	85	85	85	85	85	85	85	85	85	85	85
Heavy Vehicles, %	29	29	29	36	36	36	2	2	2	2	2	2
Mvmt Flow	47	506	24	24	553	59	12	59	24	47	94	59

Major/Minor	Major1			Major2			Minor1			Minor2		
Conflicting Flow All	553	0	0	529	0	0	1288	1212	518	1253	1224	553
Stage 1	-	-	-	-	-	-	612	612	-	600	600	-
Stage 2	-	-	-	-	-	-	676	600	-	653	624	-
Critical Hdwy	4.39	-	-	4.46	-	-	7.12	6.52	6.22	7.12	6.52	6.22
Critical Hdwy Stg 1	-	-	-	-	-	-	6.12	5.52	-	6.12	5.52	-
Critical Hdwy Stg 2	-	-	-	-	-	-	6.12	5.52	-	6.12	5.52	-
Follow-up Hdwy	2.461	-	-	2.524	-	-	3.518	4.018	3.318	3.518	4.018	3.318
Pot Cap-1 Maneuver	895	-	-	886	-	-	141	182	558	149	179	533
Stage 1	-	-	-	-	-	-	480	484	-	488	490	-
Stage 2	-	-	-	-	-	-	443	490	-	456	478	-
Platoon blocked, %		-	-		-	-						
Mov Cap-1 Maneuver	895	-	-	886	-	-	61	161	558	94	159	533
Mov Cap-2 Maneuver	-	-	-	-	-	-	61	161	-	94	159	-
Stage 1	-	-	-	-	-	-	444	448	-	451	470	-
Stage 2	-	-	-	-	-	-	302	470	-	351	442	-

Approach	EB	WB	NB	SB
HCM Control Delay, s	0.8	0.3	57.4	190.6
HCM LOS			F	F

Minor Lane/Major Mvmt	NBLn1	EBL	EBT	EBR	WBL	WBT	WBR	SBLn1
Capacity (veh/h)	157	895	-	-	886	-	-	166
HCM Lane V/C Ratio	0.599	0.053	-	-	0.027	-	-	1.205
HCM Control Delay (s)	57.4	9.2	0	-	9.2	0	-	190.6
HCM Lane LOS	F	A	A	-	A	A	-	F
HCM 95th %tile Q(veh)	3.2	0.2	-	-	0.1	-	-	11

Intersection	
Int Delay, s/veh	1.7

Movement	EBL	EBT	EBR	WBL	WBT	WBR	NBL	NBT	NBR	SBL	SBT	SBR
Vol, veh/h	10	480	10	10	510	10	10	10	10	10	10	10
Conflicting Peds, #/hr	0	0	0	0	0	0	0	0	0	0	0	0
Sign Control	Free	Free	Free	Free	Free	Free	Stop	Stop	Stop	Stop	Stop	Stop
RT Channelized	-	-	None	-	-	None	-	-	None	-	-	None
Storage Length	-	-	-	-	-	-	-	-	-	-	-	-
Veh in Median Storage, #	-	0	-	-	0	-	-	0	-	-	0	-
Grade, %	-	0	-	-	0	-	-	0	-	-	0	-
Peak Hour Factor	84	84	84	84	84	84	84	84	84	84	84	84
Heavy Vehicles, %	29	29	29	36	36	36	2	2	2	2	2	2
Mvmt Flow	12	571	12	12	607	12	12	12	12	12	12	12

Major/Minor	Major1			Major2			Minor1			Minor2		
Conflicting Flow All	619	0	0	583	0	0	1250	1244	577	1250	1244	613
Stage 1	-	-	-	-	-	-	601	601	-	637	637	-
Stage 2	-	-	-	-	-	-	649	643	-	613	607	-
Critical Hdwy	4.39	-	-	4.46	-	-	7.12	6.52	6.22	7.12	6.52	6.22
Critical Hdwy Stg 1	-	-	-	-	-	-	6.12	5.52	-	6.12	5.52	-
Critical Hdwy Stg 2	-	-	-	-	-	-	6.12	5.52	-	6.12	5.52	-
Follow-up Hdwy	2.461	-	-	2.524	-	-	3.518	4.018	3.318	3.518	4.018	3.318
Pot Cap-1 Maneuver	843	-	-	844	-	-	150	174	516	150	174	492
Stage 1	-	-	-	-	-	-	487	489	-	465	471	-
Stage 2	-	-	-	-	-	-	458	468	-	480	486	-
Platoon blocked, %		-	-		-	-						
Mov Cap-1 Maneuver	843	-	-	844	-	-	134	167	516	134	167	492
Mov Cap-2 Maneuver	-	-	-	-	-	-	134	167	-	134	167	-
Stage 1	-	-	-	-	-	-	477	479	-	455	461	-
Stage 2	-	-	-	-	-	-	426	458	-	448	476	-

Approach	EB	WB	NB	SB
HCM Control Delay, s	0.2	0.2	27.6	27.7
HCM LOS			D	D

Minor Lane/Major Mvmt	NBLn1	EBL	EBT	EBR	WBL	WBT	WBR	SBLn1
Capacity (veh/h)	195	843	-	-	844	-	-	194
HCM Lane V/C Ratio	0.183	0.014	-	-	0.014	-	-	0.184
HCM Control Delay (s)	27.6	9.3	0	-	9.3	0	-	27.7
HCM Lane LOS	D	A	A	-	A	A	-	D
HCM 95th %tile Q(veh)	0.7	0	-	-	0	-	-	0.7

Intersection	
Int Delay, s/veh	2.6

Movement	EBL	EBT	EBR	WBL	WBT	WBR	NBL	NBT	NBR	SBL	SBT	SBR
Vol, veh/h	10	450	50	20	480	10	20	10	10	20	20	10
Conflicting Peds, #/hr	0	0	0	0	0	0	0	0	0	0	0	0
Sign Control	Free	Free	Free	Free	Free	Free	Stop	Stop	Stop	Stop	Stop	Stop
RT Channelized	-	-	None	-	-	None	-	-	None	-	-	None
Storage Length	-	-	-	-	-	-	-	-	-	-	-	-
Veh in Median Storage, #	-	0	-	-	0	-	-	0	-	-	0	-
Grade, %	-	0	-	-	0	-	-	0	-	-	0	-
Peak Hour Factor	92	92	92	92	92	92	92	92	92	92	92	92
Heavy Vehicles, %	26	26	26	36	36	36	2	2	2	2	2	2
Mvmt Flow	11	489	54	22	522	11	22	11	11	22	22	11

Major/Minor	Major1			Major2			Minor1			Minor2		
Conflicting Flow All	533	0	0	543	0	0	1125	1114	516	1120	1136	527
Stage 1	-	-	-	-	-	-	538	538	-	571	571	-
Stage 2	-	-	-	-	-	-	587	576	-	549	565	-
Critical Hdwy	4.36	-	-	4.46	-	-	7.12	6.52	6.22	7.12	6.52	6.22
Critical Hdwy Stg 1	-	-	-	-	-	-	6.12	5.52	-	6.12	5.52	-
Critical Hdwy Stg 2	-	-	-	-	-	-	6.12	5.52	-	6.12	5.52	-
Follow-up Hdwy	2.434	-	-	2.524	-	-	3.518	4.018	3.318	3.518	4.018	3.318
Pot Cap-1 Maneuver	924	-	-	875	-	-	182	208	559	184	202	551
Stage 1	-	-	-	-	-	-	527	522	-	506	505	-
Stage 2	-	-	-	-	-	-	496	502	-	520	508	-
Platoon blocked, %		-	-		-	-						
Mov Cap-1 Maneuver	924	-	-	875	-	-	156	197	559	166	191	551
Mov Cap-2 Maneuver	-	-	-	-	-	-	156	197	-	166	191	-
Stage 1	-	-	-	-	-	-	518	513	-	497	487	-
Stage 2	-	-	-	-	-	-	448	484	-	491	499	-

Approach	EB	WB	NB	SB
HCM Control Delay, s	0.2	0.4	27.5	28.8
HCM LOS			D	D

Minor Lane/Major Mvmt	NBLn1	EBL	EBT	EBR	WBL	WBT	WBR	SBLn1
Capacity (veh/h)	203	924	-	-	875	-	-	205
HCM Lane V/C Ratio	0.214	0.012	-	-	0.025	-	-	0.265
HCM Control Delay (s)	27.5	8.9	0	-	9.2	0	-	28.8
HCM Lane LOS	D	A	A	-	A	A	-	D
HCM 95th %tile Q(veh)	0.8	0	-	-	0.1	-	-	1

Intersection	
Int Delay, s/veh	2.1

Movement	EBL	EBT	EBR	WBL	WBT	WBR	NBL	NBT	NBR	SBL	SBT	SBR
Vol, veh/h	10	490	10	10	480	10	10	20	10	20	10	10
Conflicting Peds, #/hr	0	0	0	0	0	0	0	0	0	0	0	0
Sign Control	Free	Free	Free	Free	Free	Free	Stop	Stop	Stop	Stop	Stop	Stop
RT Channelized	-	-	None	-	-	None	-	-	None	-	-	None
Storage Length	-	-	-	-	-	-	-	-	-	-	-	-
Veh in Median Storage, #	-	0	-	-	0	-	-	0	-	-	0	-
Grade, %	-	0	-	-	0	-	-	0	-	-	0	-
Peak Hour Factor	92	92	92	92	92	92	92	92	92	92	92	92
Heavy Vehicles, %	26	26	26	36	36	36	2	2	2	2	2	2
Mvmt Flow	11	533	11	11	522	11	11	22	11	22	11	11

Major/Minor	Major1			Major2			Minor1			Minor2		
Conflicting Flow All	533	0	0	543	0	0	1120	1114	538	1125	1114	527
Stage 1	-	-	-	-	-	-	560	560	-	549	549	-
Stage 2	-	-	-	-	-	-	560	554	-	576	565	-
Critical Hdwy	4.36	-	-	4.46	-	-	7.12	6.52	6.22	7.12	6.52	6.22
Critical Hdwy Stg 1	-	-	-	-	-	-	6.12	5.52	-	6.12	5.52	-
Critical Hdwy Stg 2	-	-	-	-	-	-	6.12	5.52	-	6.12	5.52	-
Follow-up Hdwy	2.434	-	-	2.524	-	-	3.518	4.018	3.318	3.518	4.018	3.318
Pot Cap-1 Maneuver	924	-	-	875	-	-	184	208	543	182	208	551
Stage 1	-	-	-	-	-	-	513	511	-	520	516	-
Stage 2	-	-	-	-	-	-	513	514	-	503	508	-
Platoon blocked, %		-	-		-	-						
Mov Cap-1 Maneuver	924	-	-	875	-	-	168	201	543	159	201	551
Mov Cap-2 Maneuver	-	-	-	-	-	-	168	201	-	159	201	-
Stage 1	-	-	-	-	-	-	504	502	-	511	507	-
Stage 2	-	-	-	-	-	-	483	505	-	464	499	-

Approach	EB	WB	NB	SB
HCM Control Delay, s	0.2	0.2	24.8	27
HCM LOS			C	D

Minor Lane/Major Mvmt	NBLn1	EBL	EBT	EBR	WBL	WBT	WBR	SBLn1
Capacity (veh/h)	225	924	-	-	875	-	-	207
HCM Lane V/C Ratio	0.193	0.012	-	-	0.012	-	-	0.21
HCM Control Delay (s)	24.8	8.9	0	-	9.2	0	-	27
HCM Lane LOS	C	A	A	-	A	A	-	D
HCM 95th %tile Q(veh)	0.7	0	-	-	0	-	-	0.8

Intersection	
Int Delay, s/veh	10.9

Movement	EBL	EBT	EBR	WBL	WBT	WBR	NBL	NBT	NBR	SBL	SBT	SBR
Vol, veh/h	20	460	30	10	420	20	20	40	10	40	80	90
Conflicting Peds, #/hr	0	0	0	0	0	0	0	0	0	0	0	0
Sign Control	Free	Free	Free	Free	Free	Free	Stop	Stop	Stop	Stop	Stop	Stop
RT Channelized	-	-	None	-	-	None	-	-	None	-	-	None
Storage Length	-	-	450	-	-	-	-	-	-	-	-	-
Veh in Median Storage, #	-	0	-	-	0	-	-	0	-	-	0	-
Grade, %	-	0	-	-	0	-	-	0	-	-	0	-
Peak Hour Factor	94	94	94	94	94	94	94	94	94	94	94	94
Heavy Vehicles, %	26	26	26	36	36	36	2	2	2	2	2	2
Mvmt Flow	21	489	32	11	447	21	21	43	11	43	85	96

Major/Minor	Major1			Major2			Minor1			Minor2		
Conflicting Flow All	468	0	0	489	0	0	1101	1021	489	1038	1011	457
Stage 1	-	-	-	-	-	-	532	532	-	479	479	-
Stage 2	-	-	-	-	-	-	569	489	-	559	532	-
Critical Hdwy	4.36	-	-	4.46	-	-	7.12	6.52	6.22	7.12	6.52	6.22
Critical Hdwy Stg 1	-	-	-	-	-	-	6.12	5.52	-	6.12	5.52	-
Critical Hdwy Stg 2	-	-	-	-	-	-	6.12	5.52	-	6.12	5.52	-
Follow-up Hdwy	2.434	-	-	2.524	-	-	3.518	4.018	3.318	3.518	4.018	3.318
Pot Cap-1 Maneuver	979	-	-	919	-	-	189	236	579	209	240	604
Stage 1	-	-	-	-	-	-	531	526	-	568	555	-
Stage 2	-	-	-	-	-	-	507	549	-	513	526	-
Platoon blocked, %		-	-		-	-						
Mov Cap-1 Maneuver	979	-	-	919	-	-	109	225	579	169	229	604
Mov Cap-2 Maneuver	-	-	-	-	-	-	109	225	-	169	229	-
Stage 1	-	-	-	-	-	-	515	510	-	551	546	-
Stage 2	-	-	-	-	-	-	354	540	-	448	510	-

Approach	EB	WB	NB	SB
HCM Control Delay, s	0.3	0.2	37	51.1
HCM LOS			E	F

Minor Lane/Major Mvmt	NBLn1	EBL	EBT	EBR	WBL	WBT	WBR	SBLn1
Capacity (veh/h)	185	979	-	-	919	-	-	286
HCM Lane V/C Ratio	0.403	0.022	-	-	0.012	-	-	0.781
HCM Control Delay (s)	37	8.8	0	-	9	0	-	51.1
HCM Lane LOS	E	A	A	-	A	A	-	F
HCM 95th %tile Q(veh)	1.8	0.1	-	-	0	-	-	6

Intersection	
Int Delay, s/veh	2.3

Movement	EBL	EBT	EBR	WBL	WBT	WBR	NBL	NBT	NBR	SBL	SBT	SBR
Vol, veh/h	10	500	10	10	420	10	10	10	10	40	10	10
Conflicting Peds, #/hr	0	0	0	0	0	0	0	0	0	0	0	0
Sign Control	Free	Free	Free	Free	Free	Free	Stop	Stop	Stop	Stop	Stop	Stop
RT Channelized	-	-	None	-	-	None	-	-	None	-	-	None
Storage Length	-	-	-	-	-	-	-	-	-	-	-	-
Veh in Median Storage, #	-	0	-	-	0	-	-	0	-	-	0	-
Grade, %	-	0	-	-	0	-	-	0	-	-	0	-
Peak Hour Factor	96	96	96	96	96	96	96	96	96	96	96	96
Heavy Vehicles, %	26	26	26	36	36	36	2	2	2	2	2	2
Mvmt Flow	10	521	10	10	438	10	10	10	10	42	10	10

Major/Minor	Major1			Major2			Minor1			Minor2		
Conflicting Flow All	448	0	0	531	0	0	1021	1016	526	1021	1016	443
Stage 1	-	-	-	-	-	-	547	547	-	464	464	-
Stage 2	-	-	-	-	-	-	474	469	-	557	552	-
Critical Hdwy	4.36	-	-	4.46	-	-	7.12	6.52	6.22	7.12	6.52	6.22
Critical Hdwy Stg 1	-	-	-	-	-	-	6.12	5.52	-	6.12	5.52	-
Critical Hdwy Stg 2	-	-	-	-	-	-	6.12	5.52	-	6.12	5.52	-
Follow-up Hdwy	2.434	-	-	2.524	-	-	3.518	4.018	3.318	3.518	4.018	3.318
Pot Cap-1 Maneuver	996	-	-	885	-	-	215	238	552	215	238	615
Stage 1	-	-	-	-	-	-	521	517	-	578	564	-
Stage 2	-	-	-	-	-	-	571	561	-	515	515	-
Platoon blocked, %		-	-		-	-						
Mov Cap-1 Maneuver	996	-	-	885	-	-	200	231	552	199	231	615
Mov Cap-2 Maneuver	-	-	-	-	-	-	200	231	-	199	231	-
Stage 1	-	-	-	-	-	-	514	510	-	570	556	-
Stage 2	-	-	-	-	-	-	543	553	-	488	508	-

Approach	EB	WB	NB	SB
HCM Control Delay, s	0.2	0.2	20.1	26.4
HCM LOS			C	D

Minor Lane/Major Mvmt	NBLn1	EBL	EBT	EBR	WBL	WBT	WBR	SBLn1
Capacity (veh/h)	269	996	-	-	885	-	-	230
HCM Lane V/C Ratio	0.116	0.01	-	-	0.012	-	-	0.272
HCM Control Delay (s)	20.1	8.7	0	-	9.1	0	-	26.4
HCM Lane LOS	C	A	A	-	A	A	-	D
HCM 95th %tile Q(veh)	0.4	0	-	-	0	-	-	1.1

Intersection	
Int Delay, s/veh	6.3

Movement	EBL	EBT	EBR	WBL	WBT	WBR	NBL	NBT	NBR	SBL	SBT	SBR
Vol, veh/h	0	120	450	20	180	0	0	0	0	20	0	270
Conflicting Peds, #/hr	0	0	0	0	0	0	0	0	0	0	0	0
Sign Control	Free	Free	Free	Free	Free	Free	Stop	Stop	Stop	Stop	Stop	Stop
RT Channelized	-	-	Free	-	-	None	-	-	None	-	-	None
Storage Length	-	-	-	135	-	-	-	-	-	-	-	0
Veh in Median Storage, #	-	0	-	-	0	-	-	0	-	-	0	-
Grade, %	-	0	-	-	0	-	-	0	-	-	0	-
Peak Hour Factor	92	92	92	92	92	92	92	92	92	92	92	92
Heavy Vehicles, %	38	38	38	44	44	44	2	2	2	38	2	44
Mvmt Flow	0	130	489	22	196	0	0	0	0	22	0	293

Major/Minor	Major1			Major2			Minor2		
Conflicting Flow All	196	0	-	130	0	0	369	369	196
Stage 1	-	-	-	-	-	-	239	239	-
Stage 2	-	-	-	-	-	-	130	130	-
Critical Hdwy	4.48	-	-	4.54	-	-	6.78	6.52	6.64
Critical Hdwy Stg 1	-	-	-	-	-	-	5.78	5.52	-
Critical Hdwy Stg 2	-	-	-	-	-	-	5.78	5.52	-
Follow-up Hdwy	2.542	-	-	2.596	-	-	3.842	4.018	3.696
Pot Cap-1 Maneuver	1188	-	0	1233	-	-	566	560	749
Stage 1	-	-	0	-	-	-	723	708	-
Stage 2	-	-	0	-	-	-	814	789	-
Platoon blocked, %		-			-	-			
Mov Cap-1 Maneuver	1188	-	-	1233	-	-	556	0	749
Mov Cap-2 Maneuver	-	-	-	-	-	-	556	0	-
Stage 1	-	-	-	-	-	-	710	0	-
Stage 2	-	-	-	-	-	-	814	0	-

Approach	EB	WB	SB
HCM Control Delay, s	0	0.8	12.8
HCM LOS			B

Minor Lane/Major Mvmt	EBL	EBT	WBL	WBT	WBR	SBLn1	SBLn2
Capacity (veh/h)	1188	-	1233	-	-	556	749
HCM Lane V/C Ratio	-	-	0.018	-	-	0.039	0.392
HCM Control Delay (s)	0	-	8	-	-	11.7	12.9
HCM Lane LOS	A	-	A	-	-	B	B
HCM 95th %tile Q(veh)	0	-	0.1	-	-	0.1	1.9

Intersection	
Int Delay, s/veh	4.8

Movement	EBL	EBT	EBR	WBL	WBT	WBR	NBL	NBT	NBR	SBL	SBT	SBR
Vol, veh/h	0	70	70	0	60	20	140	0	20	0	0	0
Conflicting Peds, #/hr	0	0	0	0	0	0	0	0	0	0	0	0
Sign Control	Free	Free	Free	Free	Free	Free	Stop	Stop	Stop	Stop	Stop	Stop
RT Channelized	-	-	None	-	-	None	-	-	None	-	-	None
Storage Length	-	-	-	-	-	-	0	-	0	-	-	-
Veh in Median Storage, #	-	0	-	-	0	-	-	0	-	-	0	-
Grade, %	-	0	-	-	0	-	-	0	-	-	0	-
Peak Hour Factor	86	86	86	86	86	86	86	86	86	86	86	86
Heavy Vehicles, %	38	38	38	44	44	44	44	2	2	2	2	2
Mvmt Flow	0	81	81	0	70	23	163	0	23	0	0	0

Major/Minor	Major1			Major2			Minor1		
Conflicting Flow All	93	0	0	163	0	0	203	215	122
Stage 1	-	-	-	-	-	-	122	122	-
Stage 2	-	-	-	-	-	-	81	93	-
Critical Hdwy	4.48	-	-	4.54	-	-	6.84	6.52	6.22
Critical Hdwy Stg 1	-	-	-	-	-	-	5.84	5.52	-
Critical Hdwy Stg 2	-	-	-	-	-	-	5.84	5.52	-
Follow-up Hdwy	2.542	-	-	2.596	-	-	3.896	4.018	3.318
Pot Cap-1 Maneuver	1303	-	-	1197	-	-	700	683	929
Stage 1	-	-	-	-	-	-	809	795	-
Stage 2	-	-	-	-	-	-	846	818	-
Platoon blocked, %		-	-		-	-			
Mov Cap-1 Maneuver	1303	-	-	1197	-	-	700	0	929
Mov Cap-2 Maneuver	-	-	-	-	-	-	700	0	-
Stage 1	-	-	-	-	-	-	809	0	-
Stage 2	-	-	-	-	-	-	846	0	-

Approach	EB	WB	NB
HCM Control Delay, s	0	0	11.4
HCM LOS			B

Minor Lane/Major Mvmt	NBLn1	NBLn2	EBL	EBT	EBR	WBL	WBT	WBR
Capacity (veh/h)	700	929	1303	-	-	1197	-	-
HCM Lane V/C Ratio	0.233	0.025	-	-	-	-	-	-
HCM Control Delay (s)	11.7	9	0	-	-	0	-	-
HCM Lane LOS	B	A	A	-	-	A	-	-
HCM 95th %tile Q(veh)	0.9	0.1	0	-	-	0	-	-

Intersection	
Int Delay, s/veh	301.7

Movement	EBL	EBT	WBT	WBR	SBL	SBR
Vol, veh/h	310	1290	860	180	60	160
Conflicting Peds, #/hr	0	0	0	0	0	0
Sign Control	Free	Free	Free	Free	Stop	Stop
RT Channelized	-	None	-	None	-	None
Storage Length	105	-	-	450	0	-
Veh in Median Storage, #	-	0	0	-	0	-
Grade, %	-	0	0	-	0	-
Peak Hour Factor	87	87	87	87	87	87
Heavy Vehicles, %	35	35	41	41	2	2
Mvmt Flow	356	1483	989	207	69	184

Major/Minor	Major1		Major2		Minor2	
Conflicting Flow All	989	0	-	0	2443	494
Stage 1	-	-	-	-	989	-
Stage 2	-	-	-	-	1454	-
Critical Hdwy	4.8	-	-	-	6.84	6.94
Critical Hdwy Stg 1	-	-	-	-	5.84	-
Critical Hdwy Stg 2	-	-	-	-	5.84	-
Follow-up Hdwy	2.55	-	-	-	3.52	3.32
Pot Cap-1 Maneuver	525	-	-	-	~ 26	521
Stage 1	-	-	-	-	321	-
Stage 2	-	-	-	-	181	-
Platoon blocked, %		-	-	-		
Mov Cap-1 Maneuver	525	-	-	-	~ 8	521
Mov Cap-2 Maneuver	-	-	-	-	~ 8	-
Stage 1	-	-	-	-	321	-
Stage 2	-	-	-	-	~ 58	-

Approach	EB	WB	SB
HCM Control Delay, s	4.9	0	$ 3886.8
HCM LOS			F

Minor Lane/Major Mvmt	EBL	EBT	WBT	WBR	SBLn1
Capacity (veh/h)	525	-	-	-	28
HCM Lane V/C Ratio	0.679	-	-	-	9.031
HCM Control Delay (s)	25.1	-	-		$ 3886.8
HCM Lane LOS	D	-	-	-	F
HCM 95th %tile Q(veh)	5.1	-	-	-	31.2

Notes

~: Volume exceeds capacity $: Delay exceeds 300s +: Computation Not Defined *: All major volume in platoon

Intersection	
Int Delay, s/veh	590.8

Movement	EBT	EBR	WBL	WBT	NBL	NBR
Vol, veh/h	820	210	20	750	230	200
Conflicting Peds, #/hr	0	0	0	0	0	0
Sign Control	Free	Free	Free	Free	Stop	Stop
RT Channelized	-	None	-	None	-	None
Storage Length	-	-	450	-	0	-
Veh in Median Storage, #	0	-	-	0	0	-
Grade, %	0	-	-	0	0	-
Peak Hour Factor	79	79	79	79	79	79
Heavy Vehicles, %	35	35	41	41	2	2
Mvmt Flow	1038	266	25	949	291	253

Major/Minor	Major1		Major2		Minor1	
Conflicting Flow All	0	0	1304	0	2171	652
Stage 1	-	-	-	-	1171	-
Stage 2	-	-	-	-	1000	-
Critical Hdwy	-	-	4.92	-	6.63	6.93
Critical Hdwy Stg 1	-	-	-	-	5.83	-
Critical Hdwy Stg 2	-	-	-	-	5.43	-
Follow-up Hdwy	-	-	2.61	-	3.519	3.319
Pot Cap-1 Maneuver	-	-	359	-	~ 45	411
Stage 1	-	-	-	-	~ 258	-
Stage 2	-	-	-	-	355	-
Platoon blocked, %	-	-		-		
Mov Cap-1 Maneuver	-	-	359	-	~ 42	411
Mov Cap-2 Maneuver	-	-	-	-	~ 42	-
Stage 1	-	-	-	-	~ 258	-
Stage 2	-	-	-	-	330	-

Approach	EB	WB	NB
HCM Control Delay, s	0	0.4	$ 3063.4
HCM LOS			F

Minor Lane/Major Mvmt	NBLn1	EBT	EBR	WBL	WBT
Capacity (veh/h)	72	-	-	359	-
HCM Lane V/C Ratio	7.56	-	-	0.071	-
HCM Control Delay (s)	$ 3063.4	-	-	15.8	-
HCM Lane LOS	F	-	-	C	-
HCM 95th %tile Q(veh)	62.3	-	-	0.2	-

Notes

~: Volume exceeds capacity $: Delay exceeds 300s +: Computation Not Defined *: All major volume in platoon

Intersection	
Int Delay, s/veh	6

Movement	EBL	EBT	WBT	WBR	SBL	SBR
Vol, veh/h	10	1010	750	10	20	30
Conflicting Peds, #/hr	0	0	0	0	0	0
Sign Control	Free	Free	Free	Free	Stop	Stop
RT Channelized	-	None	-	None	-	None
Storage Length	450	-	-	-	0	-
Veh in Median Storage, #	-	0	0	-	0	-
Grade, %	-	0	0	-	0	-
Peak Hour Factor	72	72	72	72	72	72
Heavy Vehicles, %	30	30	38	38	2	2
Mvmt Flow	14	1403	1042	14	28	42

Major/Minor	Major1		Major2		Minor2	
Conflicting Flow All	1056	0	-	0	2480	1049
Stage 1	-	-	-	-	1049	-
Stage 2	-	-	-	-	1431	-
Critical Hdwy	4.4	-	-	-	6.42	6.22
Critical Hdwy Stg 1	-	-	-	-	5.42	-
Critical Hdwy Stg 2	-	-	-	-	5.42	-
Follow-up Hdwy	2.47	-	-	-	3.518	3.318
Pot Cap-1 Maneuver	564	-	-	-	33	276
Stage 1	-	-	-	-	337	-
Stage 2	-	-	-	-	220	-
Platoon blocked, %		-	-	-		
Mov Cap-1 Maneuver	564	-	-	-	32	276
Mov Cap-2 Maneuver	-	-	-	-	32	-
Stage 1	-	-	-	-	337	-
Stage 2	-	-	-	-	215	-

Approach	EB	WB	SB
HCM Control Delay, s	0.1	0	218.8
HCM LOS			F

Minor Lane/Major Mvmt	EBL	EBT	WBT	WBR	SBLn1
Capacity (veh/h)	564	-	-	-	68
HCM Lane V/C Ratio	0.025	-	-	-	1.021
HCM Control Delay (s)	11.5	-	-	-	218.8
HCM Lane LOS	B	-	-	-	F
HCM 95th %tile Q(veh)	0.1	-	-	-	5.2

Intersection	
Int Delay, s/veh	12.6

Movement	EBL	EBT	WBT	WBR	SBL	SBR
Vol, veh/h	90	580	490	10	20	370
Conflicting Peds, #/hr	0	0	0	0	0	0
Sign Control	Free	Free	Free	Free	Stop	Stop
RT Channelized	-	None	-	None	-	None
Storage Length	450	-	-	-	0	-
Veh in Median Storage, #	-	0	0	-	0	-
Grade, %	-	0	0	-	0	-
Peak Hour Factor	92	92	92	92	92	92
Heavy Vehicles, %	30	30	38	38	2	2
Mvmt Flow	98	630	533	11	22	402

Major/Minor	Major1		Major2		Minor2	
Conflicting Flow All	543	0	-	0	1364	538
Stage 1	-	-	-	-	538	-
Stage 2	-	-	-	-	826	-
Critical Hdwy	4.4	-	-	-	6.42	6.22
Critical Hdwy Stg 1	-	-	-	-	5.42	-
Critical Hdwy Stg 2	-	-	-	-	5.42	-
Follow-up Hdwy	2.47	-	-	-	3.518	3.318
Pot Cap-1 Maneuver	899	-	-	-	163	543
Stage 1	-	-	-	-	585	-
Stage 2	-	-	-	-	430	-
Platoon blocked, %		-	-	-		
Mov Cap-1 Maneuver	899	-	-	-	145	543
Mov Cap-2 Maneuver	-	-	-	-	145	-
Stage 1	-	-	-	-	585	-
Stage 2	-	-	-	-	383	-

Approach	EB	WB	SB
HCM Control Delay, s	1.3	0	48.3
HCM LOS			E

Minor Lane/Major Mvmt	EBL	EBT	WBT	WBR	SBLn1
Capacity (veh/h)	899	-	-	-	476
HCM Lane V/C Ratio	0.109	-	-	-	0.891
HCM Control Delay (s)	9.5	-	-	-	48.3
HCM Lane LOS	A	-	-	-	E
HCM 95th %tile Q(veh)	0.4	-	-	-	9.8

Intersection	
Int Delay, s/veh	4.6

Movement	EBL	EBT	WBT	WBR	SBL	SBR
Vol, veh/h	280	320	340	10	10	150
Conflicting Peds, #/hr	0	0	0	0	0	0
Sign Control	Free	Free	Free	Free	Stop	Stop
RT Channelized	-	None	-	None	-	None
Storage Length	450	-	-	-	0	-
Veh in Median Storage, #	-	0	0	-	0	-
Grade, %	-	0	0	-	0	-
Peak Hour Factor	95	95	95	95	95	95
Heavy Vehicles, %	30	30	37	37	2	2
Mvmt Flow	295	337	358	11	11	158

Major/Minor	Major1		Major2		Minor2	
Conflicting Flow All	368	0	-	0	1289	363
Stage 1	-	-	-	-	363	-
Stage 2	-	-	-	-	926	-
Critical Hdwy	4.4	-	-	-	6.42	6.22
Critical Hdwy Stg 1	-	-	-	-	5.42	-
Critical Hdwy Stg 2	-	-	-	-	5.42	-
Follow-up Hdwy	2.47	-	-	-	3.518	3.318
Pot Cap-1 Maneuver	1052	-	-	-	181	682
Stage 1	-	-	-	-	704	-
Stage 2	-	-	-	-	386	-
Platoon blocked, %		-	-	-		
Mov Cap-1 Maneuver	1052	-	-	-	130	682
Mov Cap-2 Maneuver	-	-	-	-	130	-
Stage 1	-	-	-	-	704	-
Stage 2	-	-	-	-	278	-

Approach	EB	WB	SB
HCM Control Delay, s	4.5	0	14.7
HCM LOS			B

Minor Lane/Major Mvmt	EBL	EBT	WBT	WBR	SBLn1
Capacity (veh/h)	1052	-	-	-	539
HCM Lane V/C Ratio	0.28	-	-	-	0.312
HCM Control Delay (s)	9.7	-	-	-	14.7
HCM Lane LOS	A	-	-	-	B
HCM 95th %tile Q(veh)	1.2	-	-	-	1.3

Intersection	
Int Delay, s/veh	2.8

Movement	EBL	EBT	WBT	WBR	SBL	SBR
Vol, veh/h	10	330	340	210	140	10
Conflicting Peds, #/hr	0	0	0	0	0	0
Sign Control	Free	Free	Free	Free	Stop	Stop
RT Channelized	-	None	-	None	-	None
Storage Length	-	-	-	450	0	-
Veh in Median Storage, #	-	0	0	-	0	-
Grade, %	-	0	0	-	0	-
Peak Hour Factor	97	97	97	97	97	97
Heavy Vehicles, %	30	30	37	37	2	2
Mvmt Flow	10	340	351	216	144	10

Major/Minor	Major1		Major2		Minor2	
Conflicting Flow All	351	0	-	0	712	351
Stage 1	-	-	-	-	351	-
Stage 2	-	-	-	-	361	-
Critical Hdwy	4.4	-	-	-	6.42	6.22
Critical Hdwy Stg 1	-	-	-	-	5.42	-
Critical Hdwy Stg 2	-	-	-	-	5.42	-
Follow-up Hdwy	2.47	-	-	-	3.518	3.318
Pot Cap-1 Maneuver	1068	-	-	-	399	692
Stage 1	-	-	-	-	713	-
Stage 2	-	-	-	-	705	-
Platoon blocked, %		-	-	-		
Mov Cap-1 Maneuver	1068	-	-	-	394	692
Mov Cap-2 Maneuver	-	-	-	-	394	-
Stage 1	-	-	-	-	713	-
Stage 2	-	-	-	-	697	-

Approach	EB	WB	SB
HCM Control Delay, s	0.2	0	19.2
HCM LOS			C

Minor Lane/Major Mvmt	EBL	EBT	WBT	WBR	SBLn1
Capacity (veh/h)	1068	-	-	-	406
HCM Lane V/C Ratio	0.01	-	-	-	0.381
HCM Control Delay (s)	8.4	0	-	-	19.2
HCM Lane LOS	A	A	-	-	C
HCM 95th %tile Q(veh)	0	-	-	-	1.7

Intersection	
Int Delay, s/veh	0.6

Movement	EBL	EBT	EBR	WBL	WBT	WBR	NBL	NBT	NBR	SBL	SBT	SBR
Vol, veh/h	10	440	70	110	480	20	380	340	90	10	150	20
Conflicting Peds, #/hr	0	0	0	0	0	0	0	0	0	0	0	0
Sign Control	Free	Free	Free	Free	Free	Free	Stop	Stop	Stop	Stop	Stop	Stop
RT Channelized	-	-	None	-	-	None	-	-	None	-	-	None
Storage Length	-	-	450	450	-	-	-	-	-	-	-	-
Veh in Median Storage, #	-	0	-	-	0	-	-	0	-	-	0	-
Grade, %	-	0	-	-	0	-	-	0	-	-	0	-
Peak Hour Factor	79	79	79	79	79	79	79	79	79	79	79	79
Heavy Vehicles, %	30	30	30	39	39	39	2	2	2	2	2	2
Mvmt Flow	13	557	89	139	608	25	481	430	114	13	190	25

Major/Minor	Major1			Major2			Minor1			Minor2		
Conflicting Flow All	633	0	0	557	0	0	1588	1493	557	1753	1481	620
Stage 1	-	-	-	-	-	-	582	582	-	899	899	-
Stage 2	-	-	-	-	-	-	1006	911	-	854	582	-
Critical Hdwy	4.4	-	-	4.49	-	-	7.12	6.52	6.22	7.12	6.52	6.22
Critical Hdwy Stg 1	-	-	-	-	-	-	6.12	5.52	-	6.12	5.52	-
Critical Hdwy Stg 2	-	-	-	-	-	-	6.12	5.52	-	6.12	5.52	-
Follow-up Hdwy	2.47	-	-	2.551	-	-	3.518	4.018	3.318	3.518	4.018	3.318
Pot Cap-1 Maneuver	829	-	-	853	-	-	~ 87	~ 123	530	67	~ 125	488
Stage 1	-	-	-	-	-	-	499	499	-	334	358	-
Stage 2	-	-	-	-	-	-	~ 291	~ 353	-	353	499	-
Platoon blocked, %		-	-		-	-						
Mov Cap-1 Maneuver	829	-	-	853	-	-	-	~ 100	530	-	~ 102	488
Mov Cap-2 Maneuver	-	-	-	-	-	-	-	~ 100	-	-	~ 102	-
Stage 1	-	-	-	-	-	-	487	487	-	326	300	-
Stage 2	-	-	-	-	-	-	~ 85	~ 295	-	31	487	-

Approach	EB	WB	NB	SB
HCM Control Delay, s	0.2	1.8		
HCM LOS			-	-

Minor Lane/Major Mvmt	NBLn1	EBL	EBT	EBR	WBL	WBT	WBR	SBLn1
Capacity (veh/h)	-	829	-	-	853	-	-	-
HCM Lane V/C Ratio	-	0.015	-	-	0.163	-	-	-
HCM Control Delay (s)	-	9.4	0	-	10	-	-	-
HCM Lane LOS	-	A	A	-	B	-	-	-
HCM 95th %tile Q(veh)	-	0	-	-	0.6	-	-	-

Notes

~: Volume exceeds capacity $: Delay exceeds 300s +: Computation Not Defined *: All major volume in platoon

Intersection	
Int Delay, s/veh	14.9

Movement	EBL	EBT	WBT	WBR	SBL	SBR
Vol, veh/h	20	500	590	240	120	10
Conflicting Peds, #/hr	0	0	0	0	0	0
Sign Control	Free	Free	Free	Free	Stop	Stop
RT Channelized	-	None	-	None	-	None
Storage Length	-	-	-	450	0	-
Veh in Median Storage, #	-	0	0	-	0	-
Grade, %	-	0	0	-	0	-
Peak Hour Factor	79	79	79	79	79	79
Heavy Vehicles, %	30	30	39	39	2	2
Mvmt Flow	25	633	747	304	152	13

Major/Minor	Major1		Major2		Minor2	
Conflicting Flow All	747	0	-	0	1431	747
Stage 1	-	-	-	-	747	-
Stage 2	-	-	-	-	684	-
Critical Hdwy	4.4	-	-	-	6.42	6.22
Critical Hdwy Stg 1	-	-	-	-	5.42	-
Critical Hdwy Stg 2	-	-	-	-	5.42	-
Follow-up Hdwy	2.47	-	-	-	3.518	3.318
Pot Cap-1 Maneuver	748	-	-	-	~ 148	413
Stage 1	-	-	-	-	468	-
Stage 2	-	-	-	-	501	-
Platoon blocked, %		-	-	-		
Mov Cap-1 Maneuver	748	-	-	-	~ 140	413
Mov Cap-2 Maneuver	-	-	-	-	~ 140	-
Stage 1	-	-	-	-	468	-
Stage 2	-	-	-	-	475	-

Approach	EB	WB	SB
HCM Control Delay, s	0.4	0	167.7
HCM LOS			F

Minor Lane/Major Mvmt	EBL	EBT	WBT	WBR	SBLn1
Capacity (veh/h)	748	-	-	-	148
HCM Lane V/C Ratio	0.034	-	-	-	1.112
HCM Control Delay (s)	10	0	-	-	167.7
HCM Lane LOS	A	A	-	-	F
HCM 95th %tile Q(veh)	0.1	-	-	-	9

Notes

~: Volume exceeds capacity $: Delay exceeds 300s +: Computation Not Defined *: All major volume in platoon

Intersection	
Int Delay, s/veh	0.7

Movement	EBL	EBT	WBT	WBR	SBL	SBR
Vol, veh/h	20	540	520	50	20	10
Conflicting Peds, #/hr	0	0	0	0	0	0
Sign Control	Free	Free	Free	Free	Stop	Stop
RT Channelized	-	None	-	None	-	None
Storage Length	-	-	-	-	0	-
Veh in Median Storage, #	-	0	0	-	0	-
Grade, %	-	0	0	-	0	-
Peak Hour Factor	92	92	92	92	92	92
Heavy Vehicles, %	33	33	41	41	2	2
Mvmt Flow	22	587	565	54	22	11

Major/Minor	Major1		Major2		Minor2	
Conflicting Flow All	620	0	-	0	1222	592
Stage 1	-	-	-	-	592	-
Stage 2	-	-	-	-	630	-
Critical Hdwy	4.43	-	-	-	6.42	6.22
Critical Hdwy Stg 1	-	-	-	-	5.42	-
Critical Hdwy Stg 2	-	-	-	-	5.42	-
Follow-up Hdwy	2.497	-	-	-	3.518	3.318
Pot Cap-1 Maneuver	827	-	-	-	198	506
Stage 1	-	-	-	-	553	-
Stage 2	-	-	-	-	531	-
Platoon blocked, %		-	-	-		
Mov Cap-1 Maneuver	827	-	-	-	190	506
Mov Cap-2 Maneuver	-	-	-	-	190	-
Stage 1	-	-	-	-	553	-
Stage 2	-	-	-	-	510	-

Approach	EB	WB	SB
HCM Control Delay, s	0.3	0	22.3
HCM LOS			C

Minor Lane/Major Mvmt	EBL	EBT	WBT	WBR	SBLn1
Capacity (veh/h)	827	-	-	-	240
HCM Lane V/C Ratio	0.026	-	-	-	0.136
HCM Control Delay (s)	9.5	0	-	-	22.3
HCM Lane LOS	A	A	-	-	C
HCM 95th %tile Q(veh)	0.1	-	-	-	0.5

Intersection	
Int Delay, s/veh	93.6

Movement	EBL	EBT	EBR	WBL	WBT	WBR	NBL	NBT	NBR	SBL	SBT	SBR
Vol, veh/h	10	530	40	60	410	10	110	10	60	10	10	10
Conflicting Peds, #/hr	0	0	0	0	0	0	0	0	0	0	0	0
Sign Control	Free	Free	Free	Free	Free	Free	Stop	Stop	Stop	Stop	Stop	Stop
RT Channelized	-	-	None	-	-	None	-	-	None	-	-	None
Storage Length	-	-	450	-	-	-	-	-	-	-	-	-
Veh in Median Storage, #	-	0	-	-	0	-	-	0	-	-	0	-
Grade, %	-	0	-	-	0	-	-	0	-	-	0	-
Peak Hour Factor	74	74	74	74	74	74	74	74	74	74	74	74
Heavy Vehicles, %	33	33	33	41	41	41	2	2	2	2	2	2
Mvmt Flow	14	716	54	81	554	14	149	14	81	14	14	14

Major/Minor	Major1			Major2			Minor1			Minor2		
Conflicting Flow All	568	0	0	716	0	0	1479	1473	716	1514	1466	561
Stage 1	-	-	-	-	-	-	743	743	-	723	723	-
Stage 2	-	-	-	-	-	-	736	730	-	791	743	-
Critical Hdwy	4.43	-	-	4.51	-	-	7.12	6.52	6.22	7.12	6.52	6.22
Critical Hdwy Stg 1	-	-	-	-	-	-	6.12	5.52	-	6.12	5.52	-
Critical Hdwy Stg 2	-	-	-	-	-	-	6.12	5.52	-	6.12	5.52	-
Follow-up Hdwy	2.497	-	-	2.569	-	-	3.518	4.018	3.318	3.518	4.018	3.318
Pot Cap-1 Maneuver	867	-	-	730	-	-	~ 104	127	430	98	128	527
Stage 1	-	-	-	-	-	-	407	422	-	417	431	-
Stage 2	-	-	-	-	-	-	411	428	-	383	422	-
Platoon blocked, %		-	-		-	-						
Mov Cap-1 Maneuver	867	-	-	730	-	-	~ 78	103	430	61	104	527
Mov Cap-2 Maneuver	-	-	-	-	-	-	~ 78	103	-	61	104	-
Stage 1	-	-	-	-	-	-	395	410	-	405	361	-
Stage 2	-	-	-	-	-	-	323	359	-	292	410	-

Approach	EB	WB	NB	SB
HCM Control Delay, s	0.2	1.3	$ 646.7	57.1
HCM LOS			F	F

Minor Lane/Major Mvmt	NBLn1	EBL	EBT	EBR	WBL	WBT	WBR	SBLn1
Capacity (veh/h)	109	867	-	-	730	-	-	108
HCM Lane V/C Ratio	2.232	0.016	-	-	0.111	-	-	0.375
HCM Control Delay (s)	$ 646.7	9.2	0	-	10.5	0	-	57.1
HCM Lane LOS	F	A	A	-	B	A	-	F
HCM 95th %tile Q(veh)	21.1	0	-	-	0.4	-	-	1.5

Notes

~: Volume exceeds capacity $: Delay exceeds 300s +: Computation Not Defined *: All major volume in platoon

Intersection	
Int Delay, s/veh	2.5

Movement	EBL	EBT	EBR	WBL	WBT	WBR	NBL	NBT	NBR	SBL	SBT	SBR
Vol, veh/h	10	570	10	10	420	50	10	10	10	20	10	10
Conflicting Peds, #/hr	0	0	0	0	0	0	0	0	0	0	0	0
Sign Control	Free	Free	Free	Free	Free	Free	Stop	Stop	Stop	Stop	Stop	Stop
RT Channelized	-	-	None	-	-	None	-	-	None	-	-	None
Storage Length	-	-	-	-	-	-	-	-	-	-	-	-
Veh in Median Storage, #	-	0	-	-	0	-	-	0	-	-	0	-
Grade, %	-	0	-	-	0	-	-	0	-	-	0	-
Peak Hour Factor	79	79	79	79	79	79	79	79	79	79	79	79
Heavy Vehicles, %	31	31	31	39	39	39	2	2	2	2	2	2
Mvmt Flow	13	722	13	13	532	63	13	13	13	25	13	13

Major/Minor	Major1			Major2			Minor1			Minor2		
Conflicting Flow All	595	0	0	734	0	0	1354	1373	728	1355	1348	563
Stage 1	-	-	-	-	-	-	753	753	-	589	589	-
Stage 2	-	-	-	-	-	-	601	620	-	766	759	-
Critical Hdwy	4.41	-	-	4.49	-	-	7.12	6.52	6.22	7.12	6.52	6.22
Critical Hdwy Stg 1	-	-	-	-	-	-	6.12	5.52	-	6.12	5.52	-
Critical Hdwy Stg 2	-	-	-	-	-	-	6.12	5.52	-	6.12	5.52	-
Follow-up Hdwy	2.479	-	-	2.551	-	-	3.518	4.018	3.318	3.518	4.018	3.318
Pot Cap-1 Maneuver	854	-	-	725	-	-	127	146	423	127	151	526
Stage 1	-	-	-	-	-	-	402	417	-	494	495	-
Stage 2	-	-	-	-	-	-	487	480	-	395	415	-
Platoon blocked, %		-	-		-	-						
Mov Cap-1 Maneuver	854	-	-	725	-	-	111	138	423	110	143	526
Mov Cap-2 Maneuver	-	-	-	-	-	-	111	138	-	110	143	-
Stage 1	-	-	-	-	-	-	392	406	-	481	482	-
Stage 2	-	-	-	-	-	-	450	467	-	362	404	-

Approach	EB	WB	NB	SB
HCM Control Delay, s	0.2	0.2	34.1	41.5
HCM LOS			D	E

Minor Lane/Major Mvmt	NBLn1	EBL	EBT	EBR	WBL	WBT	WBR	SBLn1
Capacity (veh/h)	161	854	-	-	725	-	-	148
HCM Lane V/C Ratio	0.236	0.015	-	-	0.017	-	-	0.342
HCM Control Delay (s)	34.1	9.3	0	-	10.1	0	-	41.5
HCM Lane LOS	D	A	A	-	B	A	-	E
HCM 95th %tile Q(veh)	0.9	0	-	-	0.1	-	-	1.4

Intersection	
Int Delay, s/veh	69.7

Movement	EBL	EBT	EBR	WBL	WBT	WBR	NBL	NBT	NBR	SBL	SBT	SBR
Vol, veh/h	50	510	40	10	330	130	50	20	10	60	20	130
Conflicting Peds, #/hr	0	0	0	0	0	0	0	0	0	0	0	0
Sign Control	Free	Free	Free	Free	Free	Free	Stop	Stop	Stop	Stop	Stop	Stop
RT Channelized	-	-	None	-	-	None	-	-	None	-	-	None
Storage Length	-	-	-	-	-	450	-	-	-	-	-	-
Veh in Median Storage, #	-	0	-	-	0	-	-	0	-	-	0	-
Grade, %	-	0	-	-	0	-	-	0	-	-	0	-
Peak Hour Factor	72	72	72	72	72	72	72	72	72	72	72	72
Heavy Vehicles, %	31	31	31	39	39	39	2	2	2	2	2	2
Mvmt Flow	69	708	56	14	458	181	69	28	14	83	28	181

Major/Minor	Major1			Major2			Minor1			Minor2		
Conflicting Flow All	458	0	0	764	0	0	1465	1361	736	1382	1389	458
Stage 1	-	-	-	-	-	-	875	875	-	486	486	-
Stage 2	-	-	-	-	-	-	590	486	-	896	903	-
Critical Hdwy	4.41	-	-	4.49	-	-	7.12	6.52	6.22	7.12	6.52	6.22
Critical Hdwy Stg 1	-	-	-	-	-	-	6.12	5.52	-	6.12	5.52	-
Critical Hdwy Stg 2	-	-	-	-	-	-	6.12	5.52	-	6.12	5.52	-
Follow-up Hdwy	2.479	-	-	2.551	-	-	3.518	4.018	3.318	3.518	4.018	3.318
Pot Cap-1 Maneuver	966	-	-	705	-	-	106	148	419	121	142	603
Stage 1	-	-	-	-	-	-	344	367	-	563	551	-
Stage 2	-	-	-	-	-	-	494	551	-	335	356	-
Platoon blocked, %		-	-		-	-						
Mov Cap-1 Maneuver	966	-	-	705	-	-	~ 54	125	419	86	120	603
Mov Cap-2 Maneuver	-	-	-	-	-	-	~ 54	125	-	86	120	-
Stage 1	-	-	-	-	-	-	301	321	-	493	533	-
Stage 2	-	-	-	-	-	-	318	533	-	259	312	-

Approach	EB	WB	NB	SB
HCM Control Delay, s	0.8	0.2	$ 400.1	296.2
HCM LOS			F	F

Minor Lane/Major Mvmt	NBLn1	EBL	EBT	EBR	WBL	WBT	WBR	SBLn1
Capacity (veh/h)	72	966	-	-	705	-	-	194
HCM Lane V/C Ratio	1.543	0.072	-	-	0.02	-	-	1.503
HCM Control Delay (s)	$ 400.1	9	0	-	10.2	0	-	296.2
HCM Lane LOS	F	A	A	-	B	A	-	F
HCM 95th %tile Q(veh)	9.3	0.2	-	-	0.1	-	-	18.2

Notes

~: Volume exceeds capacity $: Delay exceeds 300s +: Computation Not Defined *: All major volume in platoon

Intersection	
Int Delay, s/veh	5.9

Movement	EBL	EBT	EBR	WBL	WBT	WBR	NBL	NBT	NBR	SBL	SBT	SBR
Vol, veh/h	10	560	10	10	490	60	10	10	10	40	10	10
Conflicting Peds, #/hr	0	0	0	0	0	0	0	0	0	0	0	0
Sign Control	Free	Free	Free	Free	Free	Free	Stop	Stop	Stop	Stop	Stop	Stop
RT Channelized	-	-	None	-	-	None	-	-	None	-	-	None
Storage Length	-	-	-	-	-	-	-	-	-	-	-	-
Veh in Median Storage, #	-	0	-	-	0	-	-	0	-	-	0	-
Grade, %	-	0	-	-	0	-	-	0	-	-	0	-
Peak Hour Factor	77	77	77	77	77	77	77	77	77	77	77	77
Heavy Vehicles, %	29	29	29	36	36	36	2	2	2	2	2	2
Mvmt Flow	13	727	13	13	636	78	13	13	13	52	13	13

Major/Minor	Major1			Major2			Minor1			Minor2		
Conflicting Flow All	714	0	0	740	0	0	1474	1500	734	1474	1467	675
Stage 1	-	-	-	-	-	-	760	760	-	701	701	-
Stage 2	-	-	-	-	-	-	714	740	-	773	766	-
Critical Hdwy	4.39	-	-	4.46	-	-	7.12	6.52	6.22	7.12	6.52	6.22
Critical Hdwy Stg 1	-	-	-	-	-	-	6.12	5.52	-	6.12	5.52	-
Critical Hdwy Stg 2	-	-	-	-	-	-	6.12	5.52	-	6.12	5.52	-
Follow-up Hdwy	2.461	-	-	2.524	-	-	3.518	4.018	3.318	3.518	4.018	3.318
Pot Cap-1 Maneuver	774	-	-	731	-	-	105	122	420	105	128	454
Stage 1	-	-	-	-	-	-	398	414	-	429	441	-
Stage 2	-	-	-	-	-	-	422	423	-	392	412	-
Platoon blocked, %		-	-		-	-						
Mov Cap-1 Maneuver	774	-	-	731	-	-	90	115	420	89	121	454
Mov Cap-2 Maneuver	-	-	-	-	-	-	90	115	-	89	121	-
Stage 1	-	-	-	-	-	-	386	402	-	417	428	-
Stage 2	-	-	-	-	-	-	386	410	-	357	400	-

Approach	EB	WB	NB	SB
HCM Control Delay, s	0.2	0.2	42.1	97.1
HCM LOS			E	F

Minor Lane/Major Mvmt	NBLn1	EBL	EBT	EBR	WBL	WBT	WBR	SBLn1
Capacity (veh/h)	135	774	-	-	731	-	-	108
HCM Lane V/C Ratio	0.289	0.017	-	-	0.018	-	-	0.722
HCM Control Delay (s)	42.1	9.7	0	-	10	0	-	97.1
HCM Lane LOS	E	A	A	-	B	A	-	F
HCM 95th %tile Q(veh)	1.1	0.1	-	-	0.1	-	-	3.8

Intersection	
Int Delay, s/veh	45.7

Movement	EBL	EBT	EBR	WBL	WBT	WBR	NBL	NBT	NBR	SBL	SBT	SBR
Vol, veh/h	50	540	10	10	500	40	20	80	20	30	60	10
Conflicting Peds, #/hr	0	0	0	0	0	0	0	0	0	0	0	0
Sign Control	Free	Free	Free	Free	Free	Free	Stop	Stop	Stop	Stop	Stop	Stop
RT Channelized	-	-	None	-	-	None	-	-	None	-	-	None
Storage Length	-	-	-	-	-	450	-	-	-	-	-	-
Veh in Median Storage, #	-	0	-	-	0	-	-	0	-	-	0	-
Grade, %	-	0	-	-	0	-	-	0	-	-	0	-
Peak Hour Factor	85	85	85	85	85	85	85	85	85	85	85	85
Heavy Vehicles, %	29	29	29	36	36	36	2	2	2	2	2	2
Mvmt Flow	59	635	12	12	588	47	24	94	24	35	71	12

Major/Minor	Major1			Major2			Minor1			Minor2		
Conflicting Flow All	588	0	0	647	0	0	1412	1371	641	1430	1377	588
Stage 1	-	-	-	-	-	-	759	759	-	612	612	-
Stage 2	-	-	-	-	-	-	653	612	-	818	765	-
Critical Hdwy	4.39	-	-	4.46	-	-	7.12	6.52	6.22	7.12	6.52	6.22
Critical Hdwy Stg 1	-	-	-	-	-	-	6.12	5.52	-	6.12	5.52	-
Critical Hdwy Stg 2	-	-	-	-	-	-	6.12	5.52	-	6.12	5.52	-
Follow-up Hdwy	2.461	-	-	2.524	-	-	3.518	4.018	3.318	3.518	4.018	3.318
Pot Cap-1 Maneuver	867	-	-	796	-	-	116	146	475	112	145	509
Stage 1	-	-	-	-	-	-	399	415	-	480	484	-
Stage 2	-	-	-	-	-	-	456	484	-	370	412	-
Platoon blocked, %		-	-		-	-						
Mov Cap-1 Maneuver	867	-	-	796	-	-	58	128	475	39	127	509
Mov Cap-2 Maneuver	-	-	-	-	-	-	58	128	-	39	127	-
Stage 1	-	-	-	-	-	-	357	371	-	429	473	-
Stage 2	-	-	-	-	-	-	370	473	-	235	368	-

Approach	EB	WB	NB	SB
HCM Control Delay, s	0.8	0.2	211	$ 367.2
HCM LOS			F	F

Minor Lane/Major Mvmt	NBLn1	EBL	EBT	EBR	WBL	WBT	WBR	SBLn1
Capacity (veh/h)	119	867	-	-	796	-	-	79
HCM Lane V/C Ratio	1.186	0.068	-	-	0.015	-	-	1.489
HCM Control Delay (s)	211	9.5	0	-	9.6	0	-	$ 367.2
HCM Lane LOS	F	A	A	-	A	A	-	F
HCM 95th %tile Q(veh)	8.8	0.2	-	-	0	-	-	9.5

Notes

~: Volume exceeds capacity $: Delay exceeds 300s +: Computation Not Defined *: All major volume in platoon

Intersection	
Int Delay, s/veh	2

Movement	EBL	EBT	EBR	WBL	WBT	WBR	NBL	NBT	NBR	SBL	SBT	SBR
Vol, veh/h	10	580	10	10	560	10	10	10	10	10	10	10
Conflicting Peds, #/hr	0	0	0	0	0	0	0	0	0	0	0	0
Sign Control	Free	Free	Free	Free	Free	Free	Stop	Stop	Stop	Stop	Stop	Stop
RT Channelized	-	-	None	-	-	None	-	-	None	-	-	None
Storage Length	-	-	-	-	-	-	-	-	-	-	-	-
Veh in Median Storage, #	-	0	-	-	0	-	-	0	-	-	0	-
Grade, %	-	0	-	-	0	-	-	0	-	-	0	-
Peak Hour Factor	84	84	84	84	84	84	84	84	84	84	84	84
Heavy Vehicles, %	29	29	29	36	36	36	2	2	2	2	2	2
Mvmt Flow	12	690	12	12	667	12	12	12	12	12	12	12

Major/Minor	Major1			Major2			Minor1			Minor2		
Conflicting Flow All	679	0	0	702	0	0	1428	1422	696	1428	1422	673
Stage 1	-	-	-	-	-	-	720	720	-	696	696	-
Stage 2	-	-	-	-	-	-	708	702	-	732	726	-
Critical Hdwy	4.39	-	-	4.46	-	-	7.12	6.52	6.22	7.12	6.52	6.22
Critical Hdwy Stg 1	-	-	-	-	-	-	6.12	5.52	-	6.12	5.52	-
Critical Hdwy Stg 2	-	-	-	-	-	-	6.12	5.52	-	6.12	5.52	-
Follow-up Hdwy	2.461	-	-	2.524	-	-	3.518	4.018	3.318	3.518	4.018	3.318
Pot Cap-1 Maneuver	799	-	-	757	-	-	113	136	442	113	136	455
Stage 1	-	-	-	-	-	-	419	432	-	432	443	-
Stage 2	-	-	-	-	-	-	426	440	-	413	430	-
Platoon blocked, %		-	-		-	-						
Mov Cap-1 Maneuver	799	-	-	757	-	-	98	129	442	98	129	455
Mov Cap-2 Maneuver	-	-	-	-	-	-	98	129	-	98	129	-
Stage 1	-	-	-	-	-	-	409	421	-	421	432	-
Stage 2	-	-	-	-	-	-	393	429	-	381	419	-

Approach	EB	WB	NB	SB
HCM Control Delay, s	0.2	0.2	36.9	36.6
HCM LOS			E	E

Minor Lane/Major Mvmt	NBLn1	EBL	EBT	EBR	WBL	WBT	WBR	SBLn1
Capacity (veh/h)	148	799	-	-	757	-	-	149
HCM Lane V/C Ratio	0.241	0.015	-	-	0.016	-	-	0.24
HCM Control Delay (s)	36.9	9.6	0	-	9.8	0	-	36.6
HCM Lane LOS	E	A	A	-	A	A	-	E
HCM 95th %tile Q(veh)	0.9	0	-	-	0	-	-	0.9

Intersection	
Int Delay, s/veh	6.4

Movement	EBL	EBT	EBR	WBL	WBT	WBR	NBL	NBT	NBR	SBL	SBT	SBR
Vol, veh/h	10	570	10	10	500	20	70	20	10	10	10	10
Conflicting Peds, #/hr	0	0	0	0	0	0	0	0	0	0	0	0
Sign Control	Free	Free	Free	Free	Free	Free	Stop	Stop	Stop	Stop	Stop	Stop
RT Channelized	-	-	None	-	-	None	-	-	None	-	-	None
Storage Length	-	-	-	-	-	-	-	-	-	-	-	-
Veh in Median Storage, #	-	0	-	-	0	-	-	0	-	-	0	-
Grade, %	-	0	-	-	0	-	-	0	-	-	0	-
Peak Hour Factor	92	92	92	92	92	92	92	92	92	92	92	92
Heavy Vehicles, %	26	26	26	36	36	36	2	2	2	2	2	2
Mvmt Flow	11	620	11	11	543	22	76	22	11	11	11	11

Major/Minor	Major1			Major2			Minor1			Minor2		
Conflicting Flow All	565	0	0	630	0	0	1234	1234	625	1239	1228	554
Stage 1	-	-	-	-	-	-	647	647	-	576	576	-
Stage 2	-	-	-	-	-	-	587	587	-	663	652	-
Critical Hdwy	4.36	-	-	4.46	-	-	7.12	6.52	6.22	7.12	6.52	6.22
Critical Hdwy Stg 1	-	-	-	-	-	-	6.12	5.52	-	6.12	5.52	-
Critical Hdwy Stg 2	-	-	-	-	-	-	6.12	5.52	-	6.12	5.52	-
Follow-up Hdwy	2.434	-	-	2.524	-	-	3.518	4.018	3.318	3.518	4.018	3.318
Pot Cap-1 Maneuver	898	-	-	808	-	-	153	177	485	152	178	532
Stage 1	-	-	-	-	-	-	460	467	-	503	502	-
Stage 2	-	-	-	-	-	-	496	497	-	450	464	-
Platoon blocked, %		-	-		-	-						
Mov Cap-1 Maneuver	898	-	-	808	-	-	138	170	485	130	171	532
Mov Cap-2 Maneuver	-	-	-	-	-	-	138	170	-	130	171	-
Stage 1	-	-	-	-	-	-	451	458	-	493	492	-
Stage 2	-	-	-	-	-	-	466	487	-	411	455	-

Approach	EB	WB	NB	SB
HCM Control Delay, s	0.2	0.2	69.9	27.1
HCM LOS			F	D

Minor Lane/Major Mvmt	NBLn1	EBL	EBT	EBR	WBL	WBT	WBR	SBLn1
Capacity (veh/h)	155	898	-	-	808	-	-	195
HCM Lane V/C Ratio	0.701	0.012	-	-	0.013	-	-	0.167
HCM Control Delay (s)	69.9	9.1	0	-	9.5	0	-	27.1
HCM Lane LOS	F	A	A	-	A	A	-	D
HCM 95th %tile Q(veh)	4.1	0	-	-	0	-	-	0.6

Intersection	
Int Delay, s/veh	1.6

Movement	EBL	EBT	EBR	WBL	WBT	WBR	NBL	NBT	NBR	SBL	SBT	SBR
Vol, veh/h	10	600	10	10	540	20	10	10	10	10	10	10
Conflicting Peds, #/hr	0	0	0	0	0	0	0	0	0	0	0	0
Sign Control	Free	Free	Free	Free	Free	Free	Stop	Stop	Stop	Stop	Stop	Stop
RT Channelized	-	-	None	-	-	None	-	-	None	-	-	None
Storage Length	-	-	-	-	-	-	-	-	-	-	-	-
Veh in Median Storage, #	-	0	-	-	0	-	-	0	-	-	0	-
Grade, %	-	0	-	-	0	-	-	0	-	-	0	-
Peak Hour Factor	92	92	92	92	92	92	92	92	92	92	92	92
Heavy Vehicles, %	26	26	26	36	36	36	2	2	2	2	2	2
Mvmt Flow	11	652	11	11	587	22	11	11	11	11	11	11

Major/Minor	Major1			Major2			Minor1			Minor2		
Conflicting Flow All	609	0	0	663	0	0	1309	1309	658	1310	1305	598
Stage 1	-	-	-	-	-	-	679	679	-	620	620	-
Stage 2	-	-	-	-	-	-	630	630	-	690	685	-
Critical Hdwy	4.36	-	-	4.46	-	-	7.12	6.52	6.22	7.12	6.52	6.22
Critical Hdwy Stg 1	-	-	-	-	-	-	6.12	5.52	-	6.12	5.52	-
Critical Hdwy Stg 2	-	-	-	-	-	-	6.12	5.52	-	6.12	5.52	-
Follow-up Hdwy	2.434	-	-	2.524	-	-	3.518	4.018	3.318	3.518	4.018	3.318
Pot Cap-1 Maneuver	863	-	-	784	-	-	136	159	464	136	160	502
Stage 1	-	-	-	-	-	-	441	451	-	476	480	-
Stage 2	-	-	-	-	-	-	470	475	-	435	448	-
Platoon blocked, %		-	-		-	-						
Mov Cap-1 Maneuver	863	-	-	784	-	-	122	153	464	122	154	502
Mov Cap-2 Maneuver	-	-	-	-	-	-	122	153	-	122	154	-
Stage 1	-	-	-	-	-	-	432	442	-	466	470	-
Stage 2	-	-	-	-	-	-	440	465	-	406	439	-

Approach	EB	WB	NB	SB
HCM Control Delay, s	0.1	0.2	29.7	29.4
HCM LOS			D	D

Minor Lane/Major Mvmt	NBLn1	EBL	EBT	EBR	WBL	WBT	WBR	SBLn1
Capacity (veh/h)	178	863	-	-	784	-	-	180
HCM Lane V/C Ratio	0.183	0.013	-	-	0.014	-	-	0.181
HCM Control Delay (s)	29.7	9.2	0	-	9.7	0	-	29.4
HCM Lane LOS	D	A	A	-	A	A	-	D
HCM 95th %tile Q(veh)	0.7	0	-	-	0	-	-	0.6

Intersection	
Int Delay, s/veh	11.3

Movement	EBL	EBT	EBR	WBL	WBT	WBR	NBL	NBT	NBR	SBL	SBT	SBR
Vol, veh/h	60	520	30	10	490	50	20	60	10	20	50	50
Conflicting Peds, #/hr	0	0	0	0	0	0	0	0	0	0	0	0
Sign Control	Free	Free	Free	Free	Free	Free	Stop	Stop	Stop	Stop	Stop	Stop
RT Channelized	-	-	None	-	-	None	-	-	None	-	-	None
Storage Length	-	-	450	-	-	-	-	-	-	-	-	-
Veh in Median Storage, #	-	0	-	-	0	-	-	0	-	-	0	-
Grade, %	-	0	-	-	0	-	-	0	-	-	0	-
Peak Hour Factor	94	94	94	94	94	94	94	94	94	94	94	94
Heavy Vehicles, %	26	26	26	36	36	36	2	2	2	2	2	2
Mvmt Flow	64	553	32	11	521	53	21	64	11	21	53	53

Major/Minor	Major1			Major2			Minor1			Minor2		
Conflicting Flow All	574	0	0	553	0	0	1303	1277	553	1287	1250	548
Stage 1	-	-	-	-	-	-	681	681	-	569	569	-
Stage 2	-	-	-	-	-	-	622	596	-	718	681	-
Critical Hdwy	4.36	-	-	4.46	-	-	7.12	6.52	6.22	7.12	6.52	6.22
Critical Hdwy Stg 1	-	-	-	-	-	-	6.12	5.52	-	6.12	5.52	-
Critical Hdwy Stg 2	-	-	-	-	-	-	6.12	5.52	-	6.12	5.52	-
Follow-up Hdwy	2.434	-	-	2.524	-	-	3.518	4.018	3.318	3.518	4.018	3.318
Pot Cap-1 Maneuver	890	-	-	867	-	-	138	166	533	141	173	536
Stage 1	-	-	-	-	-	-	440	450	-	507	506	-
Stage 2	-	-	-	-	-	-	474	492	-	420	450	-
Platoon blocked, %		-	-		-	-						
Mov Cap-1 Maneuver	890	-	-	867	-	-	82	145	533	83	152	536
Mov Cap-2 Maneuver	-	-	-	-	-	-	82	145	-	83	152	-
Stage 1	-	-	-	-	-	-	393	402	-	453	496	-
Stage 2	-	-	-	-	-	-	374	483	-	309	402	-

Approach	EB	WB	NB	SB
HCM Control Delay, s	0.9	0.2	81.9	62.1
HCM LOS			F	F

Minor Lane/Major Mvmt	NBLn1	EBL	EBT	EBR	WBL	WBT	WBR	SBLn1
Capacity (veh/h)	133	890	-	-	867	-	-	181
HCM Lane V/C Ratio	0.72	0.072	-	-	0.012	-	-	0.705
HCM Control Delay (s)	81.9	9.4	0	-	9.2	0	-	62.1
HCM Lane LOS	F	A	A	-	A	A	-	F
HCM 95th %tile Q(veh)	4.1	0.2	-	-	0	-	-	4.3

Intersection	
Int Delay, s/veh	1.8

Movement	EBL	EBT	EBR	WBL	WBT	WBR	NBL	NBT	NBR	SBL	SBT	SBR
Vol, veh/h	10	540	10	10	530	40	10	10	10	20	10	10
Conflicting Peds, #/hr	0	0	0	0	0	0	0	0	0	0	0	0
Sign Control	Free	Free	Free	Free	Free	Free	Stop	Stop	Stop	Stop	Stop	Stop
RT Channelized	-	-	None	-	-	None	-	-	None	-	-	None
Storage Length	-	-	-	-	-	-	-	-	-	-	-	-
Veh in Median Storage, #	-	0	-	-	0	-	-	0	-	-	0	-
Grade, %	-	0	-	-	0	-	-	0	-	-	0	-
Peak Hour Factor	96	96	96	96	96	96	96	96	96	96	96	96
Heavy Vehicles, %	26	26	26	36	36	36	2	2	2	2	2	2
Mvmt Flow	10	562	10	10	552	42	10	10	10	21	10	10

Major/Minor	Major1			Major2			Minor1			Minor2		
Conflicting Flow All	594	0	0	573	0	0	1193	1204	568	1193	1188	573
Stage 1	-	-	-	-	-	-	589	589	-	594	594	-
Stage 2	-	-	-	-	-	-	604	615	-	599	594	-
Critical Hdwy	4.36	-	-	4.46	-	-	7.12	6.52	6.22	7.12	6.52	6.22
Critical Hdwy Stg 1	-	-	-	-	-	-	6.12	5.52	-	6.12	5.52	-
Critical Hdwy Stg 2	-	-	-	-	-	-	6.12	5.52	-	6.12	5.52	-
Follow-up Hdwy	2.434	-	-	2.524	-	-	3.518	4.018	3.318	3.518	4.018	3.318
Pot Cap-1 Maneuver	875	-	-	852	-	-	164	184	522	164	188	519
Stage 1	-	-	-	-	-	-	494	495	-	491	493	-
Stage 2	-	-	-	-	-	-	485	482	-	488	493	-
Platoon blocked, %		-	-		-	-						
Mov Cap-1 Maneuver	875	-	-	852	-	-	150	178	522	150	181	519
Mov Cap-2 Maneuver	-	-	-	-	-	-	150	178	-	150	181	-
Stage 1	-	-	-	-	-	-	486	487	-	483	484	-
Stage 2	-	-	-	-	-	-	457	473	-	460	485	-

Approach	EB	WB	NB	SB
HCM Control Delay, s	0.2	0.2	25	28.9
HCM LOS			D	D

Minor Lane/Major Mvmt	NBLn1	EBL	EBT	EBR	WBL	WBT	WBR	SBLn1
Capacity (veh/h)	211	875	-	-	852	-	-	192
HCM Lane V/C Ratio	0.148	0.012	-	-	0.012	-	-	0.217
HCM Control Delay (s)	25	9.2	0	-	9.3	0	-	28.9
HCM Lane LOS	D	A	A	-	A	A	-	D
HCM 95th %tile Q(veh)	0.5	0	-	-	0	-	-	0.8

Intersection	
Int Delay, s/veh	4.1

Movement	EBL	EBT	EBR	WBL	WBT	WBR	NBL	NBT	NBR	SBL	SBT	SBR
Vol, veh/h	0	260	330	20	410	0	0	0	0	30	0	190
Conflicting Peds, #/hr	0	0	0	0	0	0	0	0	0	0	0	0
Sign Control	Free	Free	Free	Free	Free	Free	Stop	Stop	Stop	Stop	Stop	Stop
RT Channelized	-	-	Free	-	-	None	-	-	None	-	-	None
Storage Length	-	-	-	135	-	-	-	-	-	-	-	0
Veh in Median Storage, #	-	0	-	-	0	-	-	0	-	-	0	-
Grade, %	-	0	-	-	0	-	-	0	-	-	0	-
Peak Hour Factor	92	92	92	92	92	92	92	92	92	92	92	92
Heavy Vehicles, %	38	38	38	44	44	44	2	2	2	38	2	44
Mvmt Flow	0	283	359	22	446	0	0	0	0	33	0	207

Major/Minor	Major1			Major2			Minor2		
Conflicting Flow All	446	0	-	283	0	0	772	772	446
Stage 1	-	-	-	-	-	-	489	489	-
Stage 2	-	-	-	-	-	-	283	283	-
Critical Hdwy	4.48	-	-	4.54	-	-	6.78	6.52	6.64
Critical Hdwy Stg 1	-	-	-	-	-	-	5.78	5.52	-
Critical Hdwy Stg 2	-	-	-	-	-	-	5.78	5.52	-
Follow-up Hdwy	2.542	-	-	2.596	-	-	3.842	4.018	3.696
Pot Cap-1 Maneuver	948	-	0	1073	-	-	321	330	533
Stage 1	-	-	0	-	-	-	549	549	-
Stage 2	-	-	0	-	-	-	689	677	-
Platoon blocked, %		-			-	-			
Mov Cap-1 Maneuver	948	-	-	1073	-	-	314	0	533
Mov Cap-2 Maneuver	-	-	-	-	-	-	314	0	-
Stage 1	-	-	-	-	-	-	538	0	-
Stage 2	-	-	-	-	-	-	689	0	-

Approach	EB	WB	SB
HCM Control Delay, s	0	0.4	16.2
HCM LOS			C

Minor Lane/Major Mvmt	EBL	EBT	WBL	WBT	WBR	SBLn1	SBLn2
Capacity (veh/h)	948	-	1073	-	-	314	533
HCM Lane V/C Ratio	-	-	0.02	-	-	0.104	0.387
HCM Control Delay (s)	0	-	8.4	-	-	17.8	16
HCM Lane LOS	A	-	A	-	-	C	C
HCM 95th %tile Q(veh)	0	-	0.1	-	-	0.3	1.8

Intersection	
Int Delay, s/veh	12.4

Movement	EBL	EBT	EBR	WBL	WBT	WBR	NBL	NBT	NBR	SBL	SBT	SBR
Vol, veh/h	0	90	210	0	50	30	380	0	20	0	0	0
Conflicting Peds, #/hr	0	0	0	0	0	0	0	0	0	0	0	0
Sign Control	Free	Free	Free	Free	Free	Free	Stop	Stop	Stop	Stop	Stop	Stop
RT Channelized	-	-	None	-	-	None	-	-	None	-	-	None
Storage Length	-	-	-	-	-	-	0	-	0	-	-	-
Veh in Median Storage, #	-	0	-	-	0	-	-	0	-	-	0	-
Grade, %	-	0	-	-	0	-	-	0	-	-	0	-
Peak Hour Factor	86	86	86	86	86	86	86	86	86	86	86	86
Heavy Vehicles, %	38	38	38	44	44	44	44	2	2	2	2	2
Mvmt Flow	0	105	244	0	58	35	442	0	23	0	0	0

Major/Minor	Major1			Major2			Minor1		
Conflicting Flow All	93	0	0	349	0	0	303	320	227
Stage 1	-	-	-	-	-	-	227	227	-
Stage 2	-	-	-	-	-	-	76	93	-
Critical Hdwy	4.48	-	-	4.54	-	-	6.84	6.52	6.22
Critical Hdwy Stg 1	-	-	-	-	-	-	5.84	5.52	-
Critical Hdwy Stg 2	-	-	-	-	-	-	5.84	5.52	-
Follow-up Hdwy	2.542	-	-	2.596	-	-	3.896	4.018	3.318
Pot Cap-1 Maneuver	1303	-	-	1010	-	-	609	597	812
Stage 1	-	-	-	-	-	-	721	716	-
Stage 2	-	-	-	-	-	-	851	818	-
Platoon blocked, %		-	-		-	-			
Mov Cap-1 Maneuver	1303	-	-	1010	-	-	609	0	812
Mov Cap-2 Maneuver	-	-	-	-	-	-	609	0	-
Stage 1	-	-	-	-	-	-	721	0	-
Stage 2	-	-	-	-	-	-	851	0	-

Approach	EB	WB	NB
HCM Control Delay, s	0	0	24.1
HCM LOS			C

Minor Lane/Major Mvmt	NBLn1	NBLn2	EBL	EBT	EBR	WBL	WBT	WBR
Capacity (veh/h)	609	812	1303	-	-	1010	-	-
HCM Lane V/C Ratio	0.726	0.029	-	-	-	-	-	-
HCM Control Delay (s)	24.9	9.6	0	-	-	0	-	-
HCM Lane LOS	C	A	A	-	-	A	-	-
HCM 95th %tile Q(veh)	6.1	0.1	0	-	-	0	-	-